TEXAS PARKS AND WILDLIFE

WILDLIFE MANAGEMENT ACTIVITIES AND PRACTICES

COMPREHENSIVE WILDLIFE MANAGEMENT PLANNING GUIDELINES

for the

Edwards Plateau and Cross Timbers & Prairies Ecological Regions

Revised
April 2010

The following Texas Parks & Wildlife Department staff have contributed to this document:

Mike Krueger, Technical Guidance Biologist – Lampasas
Mike Reagan, Technical Guidance Biologist -- Wimberley
Jim Dillard, Technical Guidance Biologist -- Mineral Wells (Retired)
Kirby Brown, Private Lands and Habitat Program Director (Retired)
Linda Campbell, Program Director, Private Lands & Public Hunting Program--Austin
Linda McMurry, Private Lands and Public Hunting Program Assistant -- Austin

With Additional Contributions From:
Kevin Schwausch, Private Lands Biologist -- Burnet
Terry Turney, Rare Species Biologist--San Marcos
Trey Carpenter, Manager, Granger Wildlife Management Area
Dale Prochaska, Private Lands Biologist – Kerr Wildlife Management Area
Nathan Rains, Private Lands Biologist – Cleburne

TEXAS
PARKS &
WILDLIFE

TABLE OF CONTENTS

Comprehensive Wildlife Management Planning Guidelines
Edwards Plateau and Cross Timbers & Prairies Ecological Regions

Introduction

Specific Habitat Management Practices

HABITAT CONTROL
EROSION CONTROL
PREDATOR CONTROL
PROVIDING SUPPLEMENTAL WATER
PROVIDING SUPPLEMENTAL FOOD
PROVIDING SUPPLEMENTAL SHELTER
CENSUS

APPENDICES

APPENDIX A: General Habitat Management Considerations, Recommendations, and Intensity Levels
APPENDIX B: Determining Qualification for Wildlife Management Use
APPENDIX C: Wildlife Management Plan Overview
APPENDIX D: Livestock Management Recommendations
APPENDIX E: Vegetation Management Recommendations
APPENDIX F: Specific Management Recommendations for White-tailed Deer
APPENDIX G: Specific Management Recommendations for Bobwhite Quail
APPENDIX H: Specific Management Recommendations for Wild Turkeys
APPENDIX I: Comments Concerning Federally Listed Endangered and Threatened Species
APPENDIX J: Nongame Wildlife Management Recommendations
APPENDIX K: Guidelines for Native Grassland Restoration Projects
APPENDIX L: Conducting White-Tailed Deer Spotlight Surveys in Central Texas
APPENDIX M: Herd Composition: An Essential Element of White-Tailed Deer Population and Harvest Management in Central Texas
APPENDIX N: Food Plots for White-tailed Deer in Central Texas
APPENDIX O: Wildlife Watering Facilities
APPENDIX P: Managing Red Imported Fire Ants in Wildlife Areas
APPENDIX Q: Trapping Brown-headed Cowbirds to Control Songbird Nest Parasitism
APPENDIX R: Small Acreage Management Techniques (Abridged
APPENDIX S: The Value of Dead and Down Wood
APPENDIX T: Sunflowers for Wildlife in the Cross Timbers
APPENDIX U: Forms
APPENDIX V: References
APPENDIX W: Shared Wildlife Resources
APPENDIX X: Wildscapes Native Plant List and Bibliography
APPENDIX Y: Learn About Whitetails
APPENDIX Z: Pesticides and Brush Control
APPENDIX AA: Requirements for Supplemental Shelter - Edwards Plateau, Crosstimbers

COMPREHENSIVE WILDLIFE MANAGEMENT PLANNING GUIDELINES

for the

Edwards Plateau Ecological Region

and the

Cross Timbers and Prairies Ecological Region

(Prepared in partial fulfillment of the requirements of HB 1358 - Wildlife Management Property Tax Valuation and HB3123 - relating to the standards for determining whether land qualifies for appraisal for ad valorem tax purposes as open-space land based on its use for wildlife management.)

Introduction

The Texas Constitution and the legislature provides those landowners with a current 1-d-1 Agricultural Valuation (often known as an Ag Exemption) an opportunity to change from a traditional qualifying agricultural practice to wildlife management as a qualifying agricultural practice while maintaining the current valuation. HB 1358 by Representative Clyde Alexander provided that the landowner must implement and complete at least one management practice from at least three of the seven wildlife management activities listed in **Appendix A**. Most landowners interested in wildlife can meet this requirement and implement several practices beyond the minimum required.

The 2001 legislative session passed HB3123, co-sponsored by Representative Bob Turner and Representative Clyde Alexander. This bill provided for further clarification of the standards required for determining whether land qualifies for appraisal as open-space land based on wildlife management. As a result of HB3123, more uniform standards of qualifying for wildlife management have been applied statewide.

Wildlife Management Tax Valuation

Land that qualifies for an agricultural valuation is appraised on its productivity value rather than on its market value. While many people refer to such land as having an “ag exemption”, in fact there is no such exemption—it is just a different method of calculating the land’s value for ad valorem tax purposes. Correctly speaking, such land has an agricultural valuation.

Under Texas law, wildlife management is legally nothing more than an additional qualifying agricultural practice people may choose from in order to maintain the agricultural valuation on their land. Just as there is no real ag “exemption”, there also is no wildlife “exemption”. Wildlife management is not an additional appraisal, nor is it separate from “traditional” agriculture. For ad valorem tax purposes wildlife management is agriculture. There is no change in the ad valorem tax valuation with wildlife management, only a change in the qualifying agricultural practice.

Acreage Requirements

There are no minimum acreage requirements unless since the previous tax year the landowner has sold, gifted, or otherwise reduced the size of their ag appraised property; the landowner has purchased or otherwise acquired property that has been partitioned

out of a larger agriculturally qualified tract. When either a change in ownership or tract size occurs, the minimum acreage requirements apply.

Landowners acquiring property that has been partitioned out of a larger qualifying tract since the previous tax year, and those who have reduced the size of their property need to be certain that the property will meet the minimum size as set by the county. Refer to **Appendix B** for the maximum and minimum acreages by region, and to your county Central Appraisal District office for the minimum acreage size adopted. It is important to note that regardless of the property size, it must still be appraised for open-space use before it is eligible to change over to wildlife management use.

When a qualifying tract of land is broken into smaller tracts and sold, the standards for minimum eligible tract size take effect. These sizes are determined by location within the state. Within each area, the county has the ability to choose within a specified range the minimum qualifying acreage. Tracts below this minimum size are not eligible to manage for wildlife as their agricultural practice for ad valorem tax purposes. The exception is for landowners who are buying property in a Wildlife Management Property Owners' Association. Wildlife management property owners associations are community developments similar to wildlife management co-ops, but differ in that each person buying into the neighborhood must make a legal commitment to practice a certain level of wildlife management. Deed restrictions, conservation easements, property owner agreements, or other legally binding covenants insure that the habitat for wildlife is protected and managed in exchange for landowners being able to maintain an agricultural valuation based on wildlife management. If such legally binding covenants exist, the county may set a 1% or 2% lower minimum acreage requirement.

These same lower minimum acreages also apply to landowners who have habitat for threatened or endangered species or a species of concern. While the actual presence of the species on the property is not required, a qualified wildlife professional must verify that the habitat for the species does in fact exist on the property before this exception is granted by the county.

Although landowners with smaller tracts of land are encouraged to work cooperatively with their neighbors for some wildlife management practices, such as conducting a population census, each landowner must also individually be doing three practices of an appropriate intensity level on their property, submit their own individual wildlife management plan and be able to qualify on their own.

The Wildlife Management Plan

This guide is intended to provide landowners with information to develop their own plans. The plan may be as simple or as extensive as the landowner chooses. The practices described in this guide are intended only as guidelines. Certain site-specific situations may necessitate changes that can be allowed if based on trained resource professionals' recommendations.

All landowners are required to develop and submit a wildlife management plan to the county Central Appraisal District along with their 1-d-1 Open Space Appraisal Application. All wildlife management plans must be on the form provided by Texas Parks & Wildlife Department. This form, PWD 885-W7000, is included in **Appendix U.**

While a comprehensive and highly detailed written wildlife management plan as described in these guidelines is not required by the county, it is highly recommended that the landowner go through this lengthier exercise and use this lengthier plan as a guide when filling out the required PWD 885-W7000 wildlife management plan form. The plan must address a separate practice in at least three of the seven wildlife management categories.

A wildlife management plan describes historic and current land use practices, establishes landowner goals and objectives (also family goals if desired) for the property, and describes specific activities and practices designed to benefit wildlife species of interest and their habitats. **This is the landowner's plan**, designed by the landowner with the possible assistance of a wildlife biologist of the Texas Parks and Wildlife Department [TPWD], Texas AgriLife Extension Service [TAE], USDA Natural Resource Conservation Service [NRCS, formerly Soil Conservation Service - SCS], Texas Forest Service [TFS], or other qualified wildlife biologist. Efforts to perform activities identified in the plan are completely voluntary on the part of the landowner, except those practices that are necessary to maintain the agricultural appraisal for wildlife management use.

A complete plan will likely include elements of all seven listed wildlife management activity categories. While Texas Parks and Wildlife Department biologists are available to assist landowners in developing a wildlife management plan for ad valorem tax purposes, it should be noted that the Department's participation is not required in order for the wildlife management plan to be valid.

What Paperwork to File

All paperwork for changing the land's qualifying agricultural practice over to wildlife management must be filed with the Chief Appraiser at the county's Central Appraisal District. No paperwork is required to be filed with Texas Parks and Wildlife Department. Landowners will need to complete a 1-d-1 Open Space Appraisal Application available from their Central Appraisal District and attach to it the completed PWD 885-W7000 wildlife management plan that is included in **Appendix U.**

With 95% of Texas privately owned, the wildlife that belongs to the people of Texas depends on private landowners to voluntarily provide them with quality habitat.

Habitat Control

Grazing Management
Prescribed Burning
Range Enhancement
Brush Management
Riparian Management and Enhancement
Wetland Enhancement
Habitat Protection for Species of Concern
Prescribed Control of Native, Exotic, and Feral Species
Wildlife Restoration

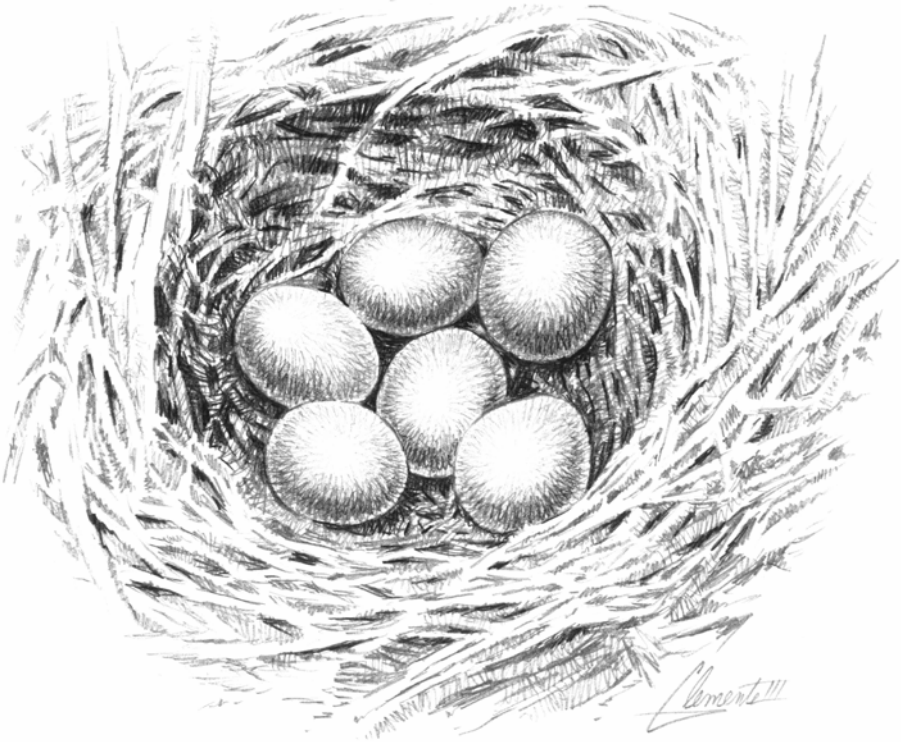

HABITAT CONTROL (HABITAT MANAGEMENT)

Introduction

Habitat is defined as the physical and biological surroundings of an organism and provides everything that a living organism needs to survive and reproduce. The three basic requirements of any wildlife species to survive and reproduce are food, water, and shelter. Quite frequently, we as land managers tend to focus on a specific wildlife species and its needs as opposed to the habitat or community in which they live. The key to managing wildlife and our natural resources is to use a holistic approach and promote healthy ecosystems. Single species deserve less attention, while the system in which they thrive requires more. Knowing how a system functions and applying the techniques with which that system developed is imperative for its continued health and existence.

Ecosystems are dynamic and continuously changing. Succession is the change in plant species composition and structure over time. It is succession that we as land managers are trying to manipulate. Generally the earlier the successional stage the greater the plant diversity and the greater the number of wildlife species that are benefited. This is not to say that some species are not dependant on later successional stages or even several stages. Managing for a diversity is important. Maintaining a variety of habitat types--while at the same time promoting plant diversity in both species composition and structure within each habitat type, should be the goal of all good wildlife management programs.

Aldo Leopold, who is known as the “Father of Modern Wildlife Management”, authored a book in 1933 titled *Game Management.* In this textbook Leopold wrote "...game can be restored by the *creative use* of the same tools which have heretofore destroyed it - ax, plow, cow, fire, and gun". Habitat control or habitat management, as it is most often referred, is the active application of these “tools” to the land in order to promote land health and enhanced availability of the 3 basic requirements to all wildlife species. It is very important that land managers today understand basic ecological principles of plant succession; plant growth; food chains; and water, mineral and soil nutritive cycles as they affect range, wildlife, and grazing management. This not only produces high quality habitat and animals, but also can lead to more stable conditions during stress periods such as droughts and winter.

Grazing Management

People often view grazing livestock as being incompatible with managing for wildlife. Although this can be the case, when properly utilized grazing can be beneficial to wildlife habitat. Focusing on good land management as opposed to strictly livestock production allows a

landowner to adjust the presence or absence of livestock as well as a grazing time and intensity level that is beneficial for both plant health and diversity.

Grasses evolved with grazing pressure. Historically great herds of bison roamed the central part of the United States and stayed constantly on the move in search of new forage and in front of predators. Bison came into an area, grazed it down, and left. Herds were never in any given area for an extended length of time. Sheer numbers of bison in the herd did not allow the animals to be selective about plants that were bitten; animals were forced to eat every palatable plant in an area. This type of grazing did several things to sustain a diverse mid- and tall-grass plant community. The intense pressure left a lot of tilled and well fertilized soil. It also decreased the overall quantity of grass and allowed sunlight to reach the lower growing forbs (weeds & wildflowers). Grasses with deeper root systems responded quicker during the absence of bison than those with shallower root systems. While intense for a short time period, this type of grazing provided long rest periods of the range and allowed rapid responses of annual forbs and grasses. The final result was more plant diversity and more wildlife foods. Bison opened stands of dense grasses providing more food for deer, turkey, quail, prairie chicken, and songbirds. Without grazing pressure neither the grasses nor the forbs respond the same, consequently, the diversity as well as the health of the system is diminished. Undoubtedly, bison were a major force that shaped the ecosystem.

European man brought with him his own form of agriculture and the range appeared unlimited in its ability to support a great number and variety of livestock (cattle, sheep, goats, oxen, hogs, and horses). The demise of the bison and changes in land use patterns eventually brought fences and livestock which were increasingly grazed in pastures with limited or no rest periods.

Forage availability and production is dependant on stocking rates, rest, and rainfall. Sedentary grazing or limited rotation grazing with even average stocking rates and rainfall can create severely abused and overgrazed range. Grasses are continually grazed beginning with the most palatable first and on down the line until the plant community consists primarily of less desirable shallow rooted grasses and a few undesirable forbs. Overall plant diversity decreases. An abused range lacks adequate groundcover and available browse to support healthy livestock and wildlife populations. Overgrazing with domestic livestock causes problems in managing for healthy ecosystems.

Good grazing management starts with the basics: 1) the kind and class of livestock grazed 2) stocking rate or intensity 3) duration of grazing to provide rest periods for the pastures and 4) excluding livestock from sensitive areas to promote vegetation protection and/or recovery.

In an ideal livestock grazing program, the goal should be high intensity - short duration. The stocking rate is such that every plant should be bitten off once during each grazed period or rotation. Sedentary grazing allows plants to be bitten over and over starting with the most palatable first. The less desirable plants keep growing while the more

palatable ones continue to get bitten. This can result in a pasture being underutilized but still overgrazed and eventually the removal of the most desirable species. Having enough animals to bite the plants only once means livestock can only stay in one place for a short period of time before they have to be moved to another pasture. A high intensity - short duration grazing requires a number of pastures within the grazing system to allow for extended rest periods.

High intensity - short duration grazing systems allow livestock to act as a tool to manipulate and enhance wildlife habitat and plant diversity as the bison did historically in our grassland and savannah ecosystems. There are a number of variations of this system; finding one that you are able to implement on your property is the key. If it is unrealistic to divide a property into enough small pastures to both sufficiently graze and rest the range, a small landowner may want to contact neighbors to pool property and allow each property to serve as a pasture in a grazing rotation. Properties without these options may have to use prescribed burning and/or mowing to achieve some of the results and benefits of grazing.

For additional information see Appendix D. Contact the Texas Parks and Wildlife Department's Kerr Wildlife Management Area at 830-238-4483 or write to Kerr WMA, 2625 FM 1340, Hunt, TX 78024 to schedule a visit and see the effects of both grazing systems and "over-rest" situations.

Prescribed Burning

Bison were not the only major force shaping the ecosystem in which pronghorn antelope, black bear, wolf, white-tailed deer, turkey, quail, and prairie chicken also thrived historically. Fires, natural and man-made, played an integral role in perpetuating that system. Fire is a natural ecological factor to which native vegetation is well adapted. Since the 1850s, because man has suppressed fire, the grasslands and savannahs that were once dotted with occasional mottes of trees and forests or along drainage systems are now dominated by brush and woodlands. Europeans suppressed fire to prevent damage to wooden structures, farmlands, fences, and grazing lands. In turn this eliminated or reduced the role that fire played in maintaining ecosystems that were dominated by herbaceous vegetation.

Prescribed burning is the planned application of fire to set back plant succession. It improves habitat and plant diversity and returns nutrients to the soil. Burning can improve accessibility, increase both quantity and quality of forage and browse production, suppress brush and cactus, improve grazing distribution of

livestock and wildlife, and remove excessive thatch and debris. Prescribed burning is a tool used to maintain desired vegetation composition and structure.

Achieving a management objective requires a particular set of conditions for burning and a specific type of fire or burn prescription. A burn prescription defines the range of conditions and factors under which a fire boss will light a fire to meet these specific objectives. Factors that influence the type of fire and its intensity include time of the year, fuel quantity and moisture, air temperature, humidity, soil moisture, wind speed, geographic area, and direction of the flame front movement in relation to the wind. Generally summer fires are hotter type fires and winter-spring fires are cooler burning fires. As fuel quantity goes up and fuel moisture goes down, the the intensity of a fire increases. The same goes for higher the wind speed and air temperature: the lower the humidity and soil moisture, the hotter the fire. Fire set to move in the same direction as the wind is a called a headfire, whereas fire set to move against the wind is a backfire. Headfires burn hotter than backfires.

The plant response after a fire is influenced by fire intensity, plant condition at the time of the burn as well as weather conditions and grazing management practices following the burn. For example, forbs are prolific seed producers and valuable resource for white-tailed deer and other wildlife species. Forb seedlings are highly susceptible to fire, and a late winter burn after annuals have germinated may reduce forb production for the following growing season. A winter burn used to target certain evergreen trees or shrubs, such as Ashe juniper (cedar) or yaupon holly, is less likely to harm deciduous trees–such as oaks–than a late summer fire used to target the same species. Burned pastures can be grazed immediately to reduce grasses that compete with forbs or to make use of now palatable prickly pear and then deferred to allow the pasture to rest. White-tailed deer and exotic wildlife numbers may have to be reduced prior to burning to allow time for preferred plants to reestablish following the burn.

A successful prescribed burn includes 3 basic steps: 1) develop a burn plan which should include management goals and objectives, burn prescription, safety plan, description and map of the burn unit, smoke management, legal requirements, contacts and notifications, control and firing plan, and evaluation 2) a safe and effective execution of the burn on the planned site and 3) good range, livestock, and wildlife management to maximize the effects of the burn. Inexperienced managers should ask for assistance and/or advice from agencies such as Texas Parks & Wildlife or the Natural Resources Conservation Service. While instructional materials are available, it is suggested that the novice assist on a burn conducted by an experienced person before attempting a prescribed burn. In some parts of the state, landowners have banded together to form prescribed burning associations to share knowledge, equipment and assist each other in conducting controlled burning.

For additional information contact the Texas Parks and Wildlife Department's Kerr Wildlife Management Area at 830-238-4483 or write to: Kerr WMA, 2625 FM 1340, Hunt, TX 78024 to schedule a visit and see the effects of a good prescribed burn program.

Range Enhancement
Mismanagement and overgrazing can lead to abused rangeland. Continuous over-utilization by livestock and/or white-tailed deer and exotics can remove certain desirable and highly palatable plants from a system. In many areas, plant communities now consist of lower stage succesional species of native annual and perennial cool season grass and forb or other non-native plants. Past land use practices such as mechanical clearing or farming may cause some plants to become rare or even nonexistent on certain ranges. Range enhancement is the re-establishment or enhancement of plant communities with native grasses and forbs. These plants provide both food and cover for wildlife and help to meet the three basic requirements.

Seeding mixes should provide for maximum native plant diversity and should include several broadleaf native perennial plants which are important forage for wildlife and seed production. Range enhancement should include appropriate plants or seed mixtures as well as approved methods for planting in the particular ecological region where the property is located. Non-native species are not recommended and should be used only in rare and very specific cases. Even then non-natives should not exceed 25% of the seeding mix.

Managing, restoring, and/or protecting native grass prairies is also considered range enhancement. This may or may not include actual reseeding but could include utilizing some of the “tools” to manage for the earlier successional stages of a native prairie. Grazing, burning, and mechanical disturbance (mowing or plowing) are all options to manage and restore native prairie.

For additional information see Appendix E.

Brush Management
Historically, bison and fire had a significant impact on plant communities, but with the removal of these major influences plant communities have changed. Without fire and a high intensity - short duration type grazing regime, plant communities began to see an increase in woody plant species and a change from grassland or savannah communities to more brushland or woodland habitat types. As brush continues to increase and forms closed canopies, cutting off sunlight to the area underneath, grass and forb production as well as overall diversity decreases. Some woody species such as Ashe juniper tend to increase at rates greater than others, and can begin to dominate a system. Ashe juniper has had a tremendous impact on the ecosystem by causing an increase in soil erosion and significantly less water absorption. Cedar brakes lose a significant amount of precipitation through transpiration and overland flow, leaving much less water for aquifer recharge to insure adequate groundwater in the future.

As mentioned before, a diversity in both plant composition and structure within different habitat types is the key to successful wildlife management. An area that is dominated by any single type or species of plant is rarely going to meet the needs of even a single species of wildlife. Using the “tools” that Leopold described is the key to managing your

property and providing the adequate amount and arrangement of brush, trees, grasses and forbs to meet the needs of a wide variety of wildlife species.

Although a good grazing management and prescribed burn program can reduce the need for brush management, use of the “axe” may be necessary where other methods are not practical or cost effective. A real axe is rarely used in the 21st century when dealing with extensive brush or woody encroachment. Today, chainsaws, herbicide and mechanical equipment such as bulldozers or tree shears take its place and are used to manipulate problematic invasive woody vegetation.

Brush management is only part of a good habitat management program and should be planned carefully to address overall management goals. The primary principles that drive any good brush management program are: 1) extent 2) pattern 3) selection and 4) method. The extent to which brush is going to be cleared is the first step in developing a program. Overall goals of the property should be examined and can help to dictate the amount of clearing needed to meet wildlife, livestock and/or aesthetic expectations. Clearing 100% of the brush may be best from a livestock production standpoint, but if your overall goal includes white-tailed deer management, you may only want to clear 50% or less. Removal of only individual plants may be all you need to do depending on the amount of brush you have. The pattern in which brush is cleared should consider wildlife cover and accessibility. This may include cover from predators, nesting cover, loafing cover or roosting cover. Maintaining travel corridors that link sections of brush is also very important. Selection includes both the site and the species of brush to be cleared. The site of brush clearing is important to make sure potential soil erosion is kept to a minimum. Soil type and slope should be considered. Certain soils may also be selected for clearing because of better forage production. Removal of desirable plant species used by wildlife for food and cover should be kept to a minimum. The method(s) used will be determined by a total cost analysis, soil erosion issues, and the type or species of brush which is being targeted.

For additional information contact the Texas Parks and Wildlife Department’s Kerr Wildlife Management Area at 830-238-4483 or write to Kerr WMA, 2625 FM 1340, Hunt, TX 78024 to schedule a visit and see the effects of brush management programs.

Forest Management

The forests of Texas are as diverse as the landscape itself. Much of the historic landscape was dominated by grasslands with occasional mottes or scattered groups of trees interspersed. Aside from the pine forests of East Texas, forested areas were generally restricted to bottomlands along major rivers and creeks, or in areas protected from fire. Settlers in East Texas discovered a vast forest comprised of a variety of both pine and hardwood species. Pines, for the most part, dominated the uplands while hardwoods dominated the bottomlands. Agricultural production, commercial timber production, and other changes in land management, including virtual elimination of fire, the forests of today are very different than those present during pre-settlement times.

Forest management may include establishing, maintaining, harvesting, selectively removing or suppressing trees or woody species to allow for the growth of desirable trees, shrubs, grasses, and forbs for forage and nesting or protective cover for a variety of wildlife species. Activities should focus on keeping the proper kind, amount, and distribution of woody cover for selected wildlife species as well as retaining snags for cavity nesters. Forested areas can be managed to produce wood fiber, while at the same time providing quality habitat for wildlife. Timber management strategies can be grouped into 2 categories, even-aged and uneven-aged.

Even-aged management is defined as the application of a combination of management actions, which results in a timber stand comprised of trees that are the same age. Harvest methods used to generate even-aged stands are clearcut, seed-tree, and shelterwood. A clearcut results in the removal of all merchantable timber and is usually followed by site preparation and planting. Both the seed-tree and shelterwood methods rely on natural regeneration. A seed-tree operation results in the removal of all merchantable timber, with the exception of a few, well-spaced high quality trees with good seed production that will be relied upon to regenerate the stand. Approximately 8-10 trees per acre may be retained for seed production. These seed-trees may be harvested after adequate regeneration has become established, or may be left indefinitely. The shelterwood method results in the removal of 40 to 60% of the merchantable timber. The residual trees are relied upon for seed production and seedlings become established in partial sunlight under the shelter of the residual trees. Similar to the seed-tree method, residual trees may be harvested after adequate regeneration has become established. Regardless of the method used, consideration should be given to the size, shape, and distribution of the harvest area prior to the final harvest operation.

Uneven-aged management is defined as the application of a combination of management actions that maintains several age-classes and tree sizes within a timber stand. In order to produce a sustained yield of forest products, uneven-aged management results in continuous canopy coverage, recurring regeneration of desirable species, and the orderly growth and development of trees in several diameter and age-classes. Regeneration is through natural methods. Under an uneven-aged management strategy, individual trees (single-tree selection) or small groups of trees (group selection) are selectively harvested every 5-10 years. An area properly managed under single-tree selection results in a forest that is comprised of evenly distributed large, medium, and small trees of various ages. This system requires the removal of trees of all ages and sizes in order to maintain a healthy stand. To prevent degradation of the stand, the application of this harvest strategy requires the expertise of a forester experienced in uneven-aged management. Diameter cutting (cutting all trees larger than a predetermined size, rather than using tree age as criteria) or "high-grading", can result in a stand comprised of inferior trees after a few cutting cycles and should be avoided.

During harvest, streamside management zones (SMZs), or a band of uncut timber, should be retained on each side of stream channels within the regeneration area. The SMZ should be a minimum width of 66 feet on each side of the channel. Along

intermittent and perennial streams, widths of 100 feet or more are preferred. To provide maximum benefit to wildlife, these minimum widths should be extended to an identifiable natural break in topography (crest to crest), or to an area defined by the presence or absence of bottomland hardwoods. In addition to protecting water quality, these areas increase diversity, provide valuable mast production, and serve as wildlife travel corridors.

Effective habitat management often requires the availability and proper use of an array of management "tools". Due to varying management objectives, no one tool, or in this case timber management system, is the most appropriate for every situation. Misuse of a timber management strategy can cause degradation of habitat quality. As with all land management practices, managers should develop well-defined objectives, and select and properly implement the strategy that is the most appropriate for their management needs.

Note: As of January 2010 property currently appraised with a timber valuation for ad valorem tax purposes now qualify for conversion to wildlife management.

Riparian Management and Improvement

Riparian area refers to the low lying areas on either side of a stream course. Management or improvement of the vegetation in these areas helps to alleviate soil erosion and protect water quality. Much of our bottomland hardwood forests that existed historically have been cleared for agricultural production, degraded through improper timber harvest or other mismanagement, or flooded by the construction of flat water reservoirs. Bottomland hardwoods have been referred to as the single most important wildlife habitat type and provide a wealth of benefits for wildlife, erosion control, flood control, water quality, water retention, and ecosystem health. Managers should attempt to restore and/or manage these riparian areas that include bottomland hardwoods and natural wetlands to promote ecosystem health and diversity.

Riparian management and improvements can include providing alternate livestock watering sites, deferring livestock from riparian areas during critical periods, excluding livestock from pastures with riparian areas, herbaceous plantings or seeding in degraded riparian zones, or replanting previously cleared or degraded bottomland hardwoods. Attention should specifically be given to protection of turkey roosting areas and snag retention for cavity nesters

Wetland Improvements

It has been estimated that Texas has lost 54% of its total wetland acreage in the last 200 years. Wetlands were at one time regarded as waste-lands and nothing more than breeding grounds for insects, pests, and disease; they were considered obstacles to progress and development and were readily converted to other land uses. It is only in the recent past that wetlands were recognized as some of the most ecologically important systems on earth. Wetlands are invaluable for their ability to prevent erosion, purify water, prevent and minimize flooding, and replenish groundwater resources. They provide humans with fossil fuels and food and wildlife with invaluable habitat.

Managing, protecting, restoring, or creating wetland habitat plays an integral part in a successful wildlife program.

Texas wetlands may include swamps, bottomland hardwoods, marshes, bogs, springs, playa lakes, or saline lakes. They are found along rivers, streams, lakes, and ponds; in uplands where surface water collects and at points of groundwater discharge such as springs or seeps. Wetlands are characterized by 1) water or saturated soils for at least a portion of the year 2) plants that are adapted to wet environments (hydrophytic vegetation) and 3) soils that develop under depleted oxygen conditions (hydric soils). Managing for wetland improvement can involve any practice that enhances, restores, or creates these 3 characters. Setting back succession in an existing wetland by using the axe, cow, plow, or fire to ensure the integrity of the wetland plant community can be important to the production of wetland wildlife food sources. Closing a ditch that was once used to drain an existing wetland or creating a ditch or drilling a water well to increase water flow into a wetland can be very important to maintaining the hydrology or flooding regime needed for that wetland to continue to function. Cleaning out a seep or spring which is experiencing reduced flow due to siltation can provide more permanent or seasonal water. And building a levee with water control structures to manage the water regime and provide water during the growing season and for fall and winter migrants can be an important habitat source for waterfowl or shorebirds.

The management options for wetlands are as diverse as the wetlands themselves. Where the opportunity exists, wetland management provides unique opportunities for habitat management that benefits a great diversity of wildlife and overall land health.

Habitat Protection for Species of Concern

New and changing land use practices and the exclusion of fire and high intensity - short duration grazing by bison has had negative impacts on a number of wildlife species. Endangered, threatened, or rare wildlife species are a by product of endangered and rare habitat. Habitat protection includes managing or developing additional areas to increase nesting sites, feeding areas, and other critical habitat types to overcome limiting factors and meet the 3 basic needs of certain wildlife species.

Habitat protection as it is defined here can include setting aside critical areas of habitat, managing vegetation for a particular species, maintaining overstory vegetation from degradation, and annually monitoring the species of concern. Management for migrating, wintering, or breeding Neotropical birds and should follow specific guidelines provided by the Texas Parks and Wildlife Department specific to your ecological region. Leopold wrote "...game can be restored by the *creative use* of the same tools which have heretofore destroyed it - ax, plow, cow, fire, and gun". Broadscale habitat management for nongame species, just as for game species, should include those practices that promote an increase in plant abundance and diversity in both composition and structure.

Contact the Texas Parks and Wildlife Department for approved management guidelines before implementing activities designed to protect or enhance habitat for endangered species. For additional information see Appendix I.

Prescribed Control of Native, Exotic, and Feral Species

The appearance of most Texas rangelands is very different today compared to 150 or 200 years ago. The expansive grasslands, which were dotted with an occasional motte of trees, are no more. Mid- and tallgrass communities have been replaced with shortgrass communities or even pastures of exotic grasses. The expansive native grasslands were replaced by brush and woodlands which in turn influenced the type and number of wildlife species that flourish. The Texas white-tailed deer population is at an all time high and many ranges support more exotic and feral species now than ever before. The changing land management practices, combined with grazing pressure of too many deer, exotics, and livestock have degraded the quality of wildlife habitat across the state. Over-utilized rangelands have poor plant diversity, are often dominated by exotic or lesser quality vegetation, and support poor wildlife diversity. There may be little or no groundcover to capture runoff, rain water is lost, and groundwater is not recharged. The whole system is suffering. Using the gun, as a tool, to manage populations of white-tailed deer and other ungulates at or below the carrying capacity of the range is essential in providing quality wildlife habitat for a multitude of wildlife species.

White-tailed deer have a high reproduction potential, and in the absence of natural predators, can quickly overpopulate a range. If white-tailed deer are allowed to overpopulate, they can have negative effects on the habitat for themselves and other wildlife species. Deer consume the most palatable plant species first. Excessive browsing pressure can eliminate these preferred plant species from the range. This reduces plant diversity and has negative impacts on all wildlife species, not just white-tailed deer. Once a range is damaged by overgrazing, it can take years for it to recover, even after deer numbers are reduced to an appropriate level. The most effective way to regulate deer numbers is through hunting. Hunting allows the land manager to maintain deer numbers at a level that the habitat can support without causing damage to the habitat. In addition to habitat damage, deer from overstocked ranges generally have poor fawn survival, low body weights, and poor antler quality. The most effective way to reduce deer numbers is through the harvest of doe deer at appropriate levels. Once deer numbers are at a desired level, doe harvest must be continued to maintain the population at a desirable level.

Each time a deer hunter chooses to shoot or not to shoot a deer, a management decision that will affect the future of that deer herd and habitat is made. For example, choosing to shoot--or not to shoot a doe--affects the sex ratio and reproductive potential of the herd. Choosing to shoot--or not to shoot--a yearling buck affects the current and future age structure of the buck population. Therefore, not only can the gun be used to manipulate deer numbers, it can also be used to manipulate sex ratios, reproductive potential, and age structure of the herd.

Exotic and feral species that may include feral hogs or any number of exotic ungulates compete directly with native wildlife species for available habitat. Population reduction or elimination of these non-native species will benefit your native wildlife management program (see Predator Control Activity for additional information on feral species).

In addition, land managers should attempt to control or eradicate exotic vegetation that in many cases can dominate native habitats or reduce overall vegetation diversity. Native vegetation, as opposed to introduced species, provides better and more productive wildlife habitat. Removal of species such as chinaberry, Chinese tallow, weeping lovegrass, coastal bermudagrass, King Ranch bluestem, and Kleberg bluestem will reduce competition with native vegetation. Effective control of exotic vegetation is dependant on the species. The control method used should be an accepted or proven practice in the ecological region where the property is located.

Wildlife Restoration

Wildlife restoration has experienced numerous success stories. These efforts have resulted in stable populations of beavers, turkey, wood ducks, and white-tailed deer. Without the aid of private landowners, these successes would not have been possible. Landowners provide trapping sites for capture of the animals to be relocated, but more importantly, they mange the habitat on which these animals are dependant. Wildlife restoration means restoring or improving habitat for targeted species as part of an overall reintroduction program in a Texas Parks and Wildlife Department approved restoration area.

Erosion Control

Pond Construction and Repair
Gully Shaping
Streamside, Pond, and Wetland Revegetation
Herbaceous and/or Woody plant Establishment on Critical Areas
Dike/Levee Construction and Management
Establishing Water Diversion

Erosion Control

Any active practice that attempts to reduce or keep soil erosion to a minimum for wild animals' benefit is erosion control.

Erosion is the detachment and movement of soil by moving water, wind or ice. When raindrops hit an uncovered soil surface, they dislodge and detach soil particles *(splash erosion).* If there is more rainfall than the ground can absorb, the resulting runoff carries these detached soil particles away.

Erosion is a natural process that cannot be stopped; however, human activity such as earthmoving and tillage can accelerate the process. The erosion process advances through several stages.

- **Sheet erosion** is the removal of a fairly uniform layer of soil from the soil surface by shallow overland flow.
- **Rill erosion** occurs as shallow sheet flow concentrates into small channels. Flow in these channels causes further erosion and carries soil particles away.
- **Gully erosion** is an accelerated form of rill erosion where the channels are much deeper and carry away larger quantities of soil.

Raindrop impact on bare soil surface can also form a "crust" or pan on the soil surface that can be difficult for water to infiltrate. This creates more runoff and less water available to plants, which can decrease plant growth and ground cover leading to further erosion.

According to the U.S. Department of Agriculture the United States loses more than 2 billion tons of topsoil each year to erosion. Erosion removes fertile soil rich in nutrients and organic matter which reduces the ability of plants to establish, grow and remain healthy in the soil. A reduction in plant growth and subsequent plant residue causes less soil cover and allows the erosion process to perpetuate and become worse. This in turn affects wildlife species dependent upon the affected plant communities.

Water Quality and Conservation

Erosion not only causes loss of soil productivity but also creates water quality problems once the sediment leaves the site and enters surface waters. The EPA has declared that sediment contamination of our surface waterways is one of the biggest threats to our nation's water resources. When eroded sediment is transported from its site of origin to nearby water bodies, it can also carry fertilizers, pesticides and other contaminants attached to the soil particles.

Water that is loaded with sediments can lead to reduced drainage capacity, increased flooding, decreased aquatic organism populations, decreased commercial and recreational fishing catches, clogged and damaged commercial and industrial irrigation systems, increased expenditures at water treatment plants to clean the water, and decreased recreational and aesthetic value of water resources. Some erosion control practices include:

Pond construction is building a permanent water pond to prevent, stop or control erosion as an approved Natural Resource Conservation Service (NRCS) watershed project while providing habitat diversity and benefiting wildlife. Whenever possible, owners should use ponds to help create or restore shallow water areas as wetlands and for water management.

Gully shaping involves reducing erosion rates on severely eroded areas by smoothing to acceptable grades and re-establishing vegetation. An area should be seeded with plant species that provide food and/or cover for wildlife.

Streamside, pond and wetland revegetation means revegetating areas along creeks, streams, ponds and wetlands to reduce erosion and sedimentation, stabilize streambanks, improve plant diversity and improve the wildlife value of sensitive areas.

Establishing native plants on critical areas is one method of controlling erosion. These plants also can provide food and/or cover for wildlife and restore native habitat. Some of the ways to establish these plants are listed below.

- Establish and manage wind breaks/shelterbelts by planting multi-row shelterbelts (at least four rows that are 120 feet wide by 1/4 mile), renovate old shelterbelts (re-fence, root-prune and replace dead trees) and establish shrub mottes.
- Establish perennial vegetation on circle irrigation corners by revegetating at least every other corner to reduce erosion and sedimentation, improve plant diversity and improve wildlife habitat.
- Plant permanent vegetation on terraces and field borders to reduce erosion, improve plant diversity and improve wildlife habitat.
- Conserve tillage/no-till farming practices by leaving waste grain and stubble on the soil surface until the next planting season to provide supplemental food or cover for wildlife, control erosion and improve the soil tilth.
- Manage Conservation Reserve Program (CRP) cover by maintaining perennial cover established under the CRP on erodible sites using proper management techniques such as haying, prescribed grazing or burning.

Dike, levee construction or management is a way to establish and maintain wetlands or slow runoff to control or prevent erosion and to provide habitat for wetland-dependent wildlife. Levee management may include reshaping or repairing damage caused by erosion and revegetating levee areas to reduce erosion and sedimentation and stabilize levees. This practice may include fencing to control and manage grazing use.

Water diversion systems also can be installed to protect erodible soils and divert water into wetlands to provide habitat for resident and migratory water birds and wetland-dependent species.

Minimizing Erosion

Building and construction projects can be major causes of erosion. Landowners can take steps to minimize erosion during these projects by following a few simple, commonsense precautions.

- Plan construction activities during the spring and summer months so that erosion control measures can be in place when rain comes.
- Examine your site carefully before building. Be aware of the slope, drainage patterns and soil types. Proper site design will help you avoid expensive stabilization work.
- Preserve existing vegetation as much as possible. Limit grading and plant removal to the areas under current construction. (Vegetation will naturally curb erosion, improve the appearance and the value of your property, and reduce the cost of landscaping later.)
- Use fencing to protect plants from fill material and traffic. If you have to pave near trees, do so with permeable asphalt or porous paving blocks.
- Preserve the natural contours of the land and disturb the earth as little as possible. Limit the time in which graded areas are exposed.
- Minimize the length and steepness of slopes by benching, terracing, or constructing diversion structures. Landscape benched areas to stabilize the slope and improve its appearance.
- As soon as possible after grading a site, plant vegetation on all areas that are not to be paved or otherwise covered.
- Control dust on graded areas by sprinkling with water, restricting traffic to certain routes, and paving or gravelingaccess roads and driveways.

Temporary Measures to Stabilize the Soil

Grass provides the cheapest and most effective short-term erosion control. It grows quickly and covers the ground completely. To find the bet seed mixtures and plants for your area, check with your local nursery, the Texas Department of Agriculture, the Natural Resource Conservation Service, the Texas Cooperative Extension Service and Texas Parks and Wildlife Department.

Mulches hold soil moisture and provide ground protection from rain damage. They also provide a favorable environment for starting and growing plants. Easy-to-obtain mulches are grass clippings, leaves, sawdust, bark chips and straw. Straw mulch is nearly 100% effective when held in place by spraying with an organic glue or wood fiber (tackifiers), by punching it into the soil with a shovel or roller, or by tacking netting over it. Commercial applications of wood fibers combined with various seeds and fertilizers (hydraulic mulching) are effective in stabilizing sloped areas. Hydraulic mulching with a tackifier should be done in two separate applications: the first composed of seed fertilizer and half the mulch, the second composed of the remaining mulch and tackifier. Commercial hydraulic mulch applicators - who also provider other erosion control services - are listed under "landscaping" in the phone book.

Mats of excelsior, jute netting and plastic sheets can be effective temporary covers, but they must be in contact with the soil and fastened securely to work effectively.

Roof drainage (Rainwater Harvesting) – Rainwater can be collected in barrels or storage containers or routed into lawns, planter boxes and gardens. It can also be diverted to a watering facility to provide an additional source of water for wildlife use. Be sure to cover stored water so you don't collect mosquitoes. Excessive runoff should be directed away from your house and into wildlife watering facilities. Too much water can damage trees and make foundations unstable.

Structural Runoff Controls

Even with proper timing and planting, you may need to protect disturbed areas from rainfall until the plants have time to establish themselves. Or you may need permanent ways to transport water across your property so that it doesn't cause erosion. To keep water from carrying soil from your site and dumping it into nearby lots, streets, streams and channels, you need ways to reduce its volume and speed. Some examples of what you might use are:

- **Riprap** (rock lining) to protect channel banks from erosive water flow.
- **Sediment trap** to stop runoff carrying sediment and trap the sediment.
- **Storm drain outlet protection** to reduce the speed of water flowing from a pipe onto open ground or into a natural channel.
- **Diversion dike or perimeter dike** to divert excess water to places where it can be disposed of properly.
- **Straw bale dike** to stop and detain sediment from small unprotected areas (a short term measure).
- **Perimeter swale** to divert runoff from a disturbed are or to contain runoff within a disturbed area.
- **Grade stabilization** structure to carry concentrated runoff down a slope

Using Livestock to Repair the Effects of Erosion

Just as overgrazing can cause erosion, erosion can also be caused by under-utilization by livestock and permanent deferral. Lack of grazing can cause an algal cap to develop on the surface of the soil that with time becomes impenetrable to water. A proper stocking rate keeps the soil turned over, prevents compaction, and allows rainfall to infiltrate the soil preventing run off, and reducing erosion potential.

For information on which plants provide the best erosion control and wildlife benefit, consult the Texas Plant Information Database at http://tpid.tpwd.state.tx.us/index.asp.

Algal capping on the soil causes a nearly impenetrable barrier to rainfall, increasing the potential for erosion. Proper grazing helps prevent capping from occurring.

Predator Control

Imported Red Fire Ants
Brown-headed Cowbirds
Grackle, Starling, and House Sparrow Control
Coyotes
Feral Hogs
Raccoons, Skunks, Feral Cats and Dogs

PREDATOR CONTROL

There is no disputing the fact that predators including reptiles, birds, and mammals impact native wildlife populations. Whether that impact is negative or harmful is debated by farmers, ranchers, wildlife professionals and the general public.

Natural systems including predator – prey relationships are complex and evaluating predator impacts on native species may be difficult to say the least. Livestock injury and/or loss by predators are measurable with economic consequences and are rarely tolerated by ranchers and managers. Loss of native wildlife species may not be realized when compared to livestock losses but may have an economic impact on ranchers with possible lower lease returns and loss of individual trophy animals.

Landowners, livestock and wildlife managers should recognize that the goal of predator control should be to protect livestock and minimize losses of native wildlife due to predation, not necessarily maximizing the take of predators.

Landowners and managers must evaluate the need for predator control on their property by assessing the abundance and diversity of predators present, the potential impacts by those predators on desired wildlife species and livestock, and the long-term habitat management goals of the property. For example, removing large predators from high deer density areas will only increase deer populations impacting plant diversity and cover, thus affecting the wildlife species dependant on those plants for food, shelter, and nesting cover.

It may be difficult for landowners new to an area or those not familiar with the needs of wildlife to evaluate the impacts of predators on the resident and migratory species on their property. The mere presence of some predatory species should prompt an immediate response from the landowner or manager. Feral cats, dogs, and hogs should be removed by whatever means from wildlife habitat and should not be tolerated by owners and managers. Imported red fire ants are another example of a species that should be controlled by every means available.

The Brown-headed Cowbird, a parasitic nester that impacts more than 225 species of birds, should be controlled by trapping when possible and only after attending a certification course provided by Texas Parks and Wildlife Department at various times of the year.

Native predator species such as raccoons, ringtails, opossums, skunks, fox, and rat snakes can have localized impacts on resident bird populations especially ground nesting species such as turkey, quail, and a number of songbirds. Control of predators such as these may not need to be a top priority if habitat conditions are where they should be, offering abundant ground and understory cover for shelter, food and nesting.

Coyotes, bobcats, and mountain lions once considered predators of the “wilderness” are now found in close proximity to suburban areas as urban “sprawl” or expansion

encroaches on rural farm and ranch lands. As property is developed into this habitat, interaction with these highly adaptable and mobile species is occurring more frequently. A common sense approach should be taken when considering control of these species. The landowner or manager must evaluate the predicted outcome of control measures prior to starting any control. For example, in many parts of the Edwards Plateau, as well as the State and nationwide, there are too many white-tailed deer and controlling the predators that feed on them would cause increased populations and further loss of habitat for other wildlife species.

Some precautions can be taken when large predators are present in an area close to people. Pets and newborn livestock should be protected by any means available i.e. fencing, enclosures, housing, etc… Keep pet foods from the outdoors and restrict wildlife feeding to a safe and comfortable distance from the house. Control of prey species numbers in the form of deer harvest to at or below carrying capacity may discourage any large predators from becoming residents in the area.

If control measures are warranted, consult with a wildlife professional prior to using any measures other than shooting or trapping. Extreme caution should be taken and only the experienced should consider methods such as poisoning.

Some species may not be recognized as predators but cause damage and loss of wildlife by actions other than direct take. For example, European Starlings and English sparrows displace native cavity nesting birds such as eastern bluebirds, woodpeckers and purple martins, by taking over and actively defending nest cavities.

The presence of large grackle and blackbird colonies deter other birds from nesting in some areas. Brown-headed and Bronzed Cowbirds have tremendous impacts on songbird populations across the nation. A single female cowbird can lay up to 40 eggs per season, impacting literally hundreds of songbird species including a number of threatened and endangered species in the Edwards Plateau and Cross Timbers and Prairies. Trapping and shooting are the most economic means of control with caution taken to release non-target species from traps and proper identification made prior to shooting.

A landowner or manager should first manage the wildlife habitat on his or her property, increasing the plant diversity and abundance of species that provide food, shelter, and nesting cover for all wildlife species prior to implementing a full scale predator control program for all predator species.

For the majority of landowners that feel predator control would be useful in meeting the criteria for H.B. 1358, the bill implemented to allow agricultural appraisal for land used to manage wildlife, a few basic practices will work. The size and location of the property, amount of wildlife habitat and the goals of the landowner will influence the practices used.

Fire ant control and cowbird trapping is not dependant on the criteria above. As well as live trapping of small and medium-sized mammals such as raccoons, opossums, rats, skunks, and others. The control of sparrows, starlings, grackles and feral animals can and should occur on any size property. On larger tracts of land, control of large predators may benefit wildlife present but should be carried out by knowledgeable land managers and/or wildlife professionals when methods other than shooting or live trapping are utilized.

On properties throughout the Edwards Plateau, Cross Timbers & Prairies and across the State, landowners and managers have implemented every known control method for predators and yet they thrive. Landowners need to have a long range wildlife management plan in place defining the goals of any of the activities occurring on the property including predator control. Once in place, activities can be monitored and results can be recorded to aid in future management decision making.

Providing Supplemental Water

Marsh and Wetland Restoration or Development
Well, Troughs, Windmill Overflows, and Other Watering Facilities
Spring Development and/or Enhancement

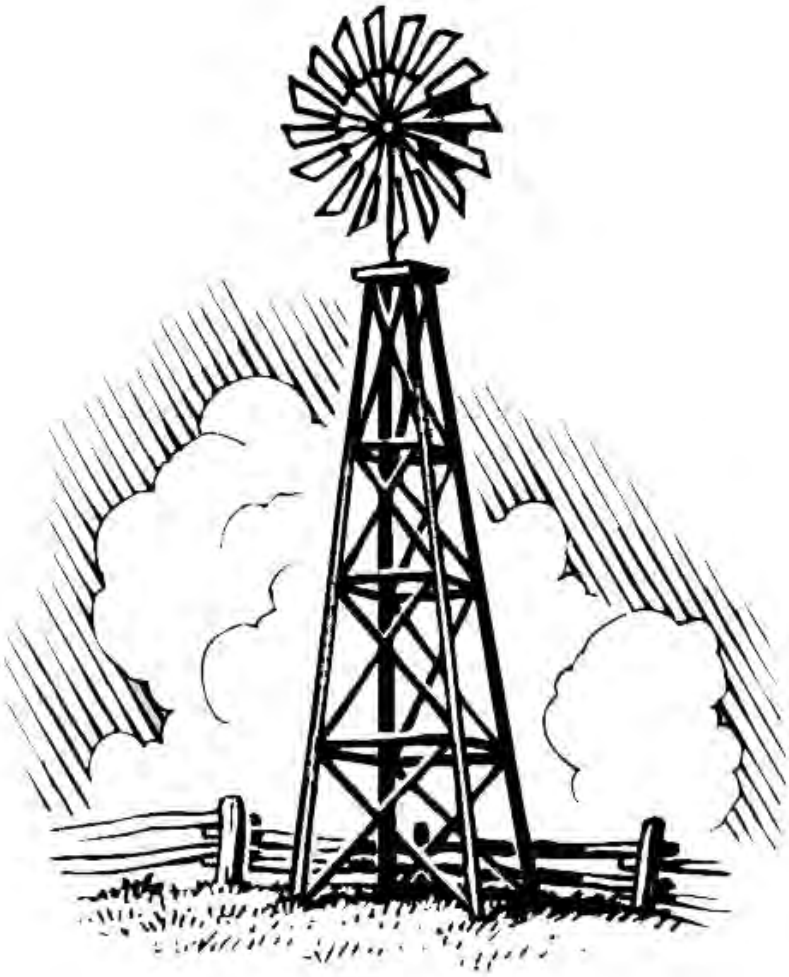

Providing Supplemental Water

Natural water exists in all wildlife environments. Supplemental water is provided when the owner actively provides water in addition to the natural sources. This category of wildlife management activity includes providing supplemental water in habitats where water is limited or redesigning water sources to increase its availability to wildlife. Many people mistakenly believe that water sources suitable for livestock are also suitable for wildlife. Unfortunately that is not always the case, particularly for young wildlife and many bird species. Wildlife water developments are in addition to those sources already available to livestock and may require protection from livestock.

Marsh or wetland restoration or development can provide supplemental water in the form of shallow wetlands for wetland-dependent wildlife, even in areas where inadequate water does not limit wildlife. Owners may include seasonally available water such as:

- greentree reservoirs;
- specific shallow roost pond development;
- seasonally flooded crops and other areas;
- moist soil management;
- cienega (desert marsh) restoration, development and protection; and
- maintaining water in playa lakes.

Based on the wildlife's needs and the suitability of the property, managing water levels annually is desirable.

Managing well, trough and windmill overflow can provide supplemental water for wildlife and provide habitat for wetland plants. Owners also may drill wells if necessary and/or build pipelines to distribute water. Building devices—known as wildlife water guzzlers—to collect rainfall and/or runoff for wildlife in areas where water is limited also helps protect wildlife, but these devices must be a part of an overall habitat management program.

Spring development and/or improvements can be designed to protect the immediate area surrounding a spring. Excluding and/or controlling livestock around springs may help to maintain native plants and animal diversity. Other ways to protect areas include moving water through a pipe to a low trough or a shallow wildlife water overflow to make water available to livestock and wildlife while preventing degradation of the spring area from trampling.

Improvements also could include restoring a degraded spring by selectively removing appropriate brush and revegetating the area with plants and maintaining the restored spring as a source of wildlife water. Maintaining critical habitat, nesting and roosting areas for wildlife and preventing soil erosion must be considered when planning and implementing brush removal. This practice should be planned and implemented gradually and selectively over a period of time.

Providing Supplemental Food

Grazing Management
Food Plots
Feeders and Mineral Supplementation
Managing Tame Pasture, Old Fields and Croplands
Transition Management of Tame Grass Monocultures

Providing Supplemental Food

Most wildlife environments have some natural food. An owner supplies supplemental food by providing food or nutrition in addition to the level naturally produced on the land.

Food plots are one way to establish locally adapted forage to provide supplemental foods and cover during critical periods of the year. Livestock should be generally excluded from small food plots. The shape, size, location and percentage of total land area devoted to food plots should be based on the requirements of the targeted species.

Feeders and mineral supplements also can help dispense additional food to selected wildlife species during critical periods. These can be as simple as properly placed bird feeders, or more elaborate types of turkey feeders. Once a feeding program has been initiated, it is important to keep it implemented and insure all feeders are kept full. It is also important to clean all feeders regularly to avoid contamination from aflatoxin. Harmful aflatoxin in feed should not exceed 20 parts per billion.

Feeders for deer should not be used except to control excessive numbers of deer and/or exotic ungulates as defined within a comprehensive wildlife management plan with a targeted harvest quota that is regularly measured.

Mineral supplements also may be supplied to wildlife in several ways, however, this practice must be a part of an overall habitat management plan that addresses all animal groups and considers the habitat's carrying capacity.

Managing tame pasture, old fields and croplands can increase plant diversity, provide supplemental food and forage and gradually help convert the land to native vegetation. Recommended practices may include:

- overseeding or planting cool season and/or warm season legumes (for example, winter wheat, clovers, vetches and peas) and/or small grains in pastures or rangeland;
- using plants and planting methods appropriate to the county;
- shallow tillage (discing) that encourages habitat diversity, the production of native grasses and forbs or increases bare ground feeding habitat for selected species; and
- no till or minimum till agricultural practices that leave waste grain and stubble on the soil surface until the next planting season—which provide supplemental food or cover, control erosion and improve soil tilth.

Legumes should be planted annually until all pastures are shifted to native vegetation.

Providing Supplemental Shelter

Nest Boxes
Brush Piles and Slash Retention
Fence-line Management
Hay Meadow, Pasture, and Cropland Management for Wildlife

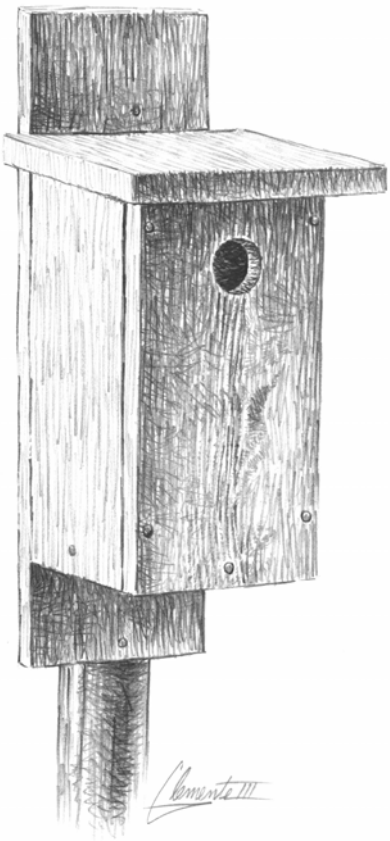

Providing Supplemental Shelter

Cover or shelter is an important part of wildlife habitat. In fact, it is an integral part along side food and water and its availability on the landscape will often determine the population of wildlife species in a given area. Wildlife cover can take many forms and can vary greatly from one species of wildlife to another. Some species of wildlife are very specific in their need for cover while other are quite opportunistic and can readily adapt to what's available. However, one thing is common when it comes to cover; all wildlife species require it.

Although supplemental shelter can be provided in many ways, it will never take the place of good conservation and management of native habitats. When land is properly managed for wildlife habitat, quality cover and shelter will usually be available. Unfortunately in much of Texas, many areas have been so altered, neglected, and abused that one of more of the key requirements of wildlife (including shelter) is absent or in short supply. This is where the opportunity exists for developing additional shelter for wildlife.

Before beginning on any wildlife management practice, you must determine what wildlife species you are managing for and what its specific cover needs are. Some need cover on a large scale while others may need a relatively small amount. Some live and reproduce exclusively on the ground while others spend most of their lives in the air or in trees. Management should be targeted to those populations of wildlife in your area and their specific cover needs.

Cover and shelter can be provided for wildlife in many ways. Some species of birds and mammals nest and reproduce in cavities. Nest boxes and snags (dead, standing trees) can be constructed and installed for these wildlife species. Brush piles can also be created to provide cover for many species of birds, reptiles, and small mammals. Some properties may lack sufficient cover on a larger scale for wildlife species such as white-tailed deer. Trees and shrubs can be planted to provide this cover requirement although this practice may not be cost-effective. Mowing can be deferred in certain areas to allow grasses and weeds (forbs) to mature and provide food, cover and nesting sites for some species of wildlife. Trees, shrubs, and vines along fence lines can be allowed or encouraged to grow up in in areas where cover is limited. Mesquite or other brush can be half-cut early in the growing season on provide low growing, ground cover in areas where this is lacking.

Census

Spotlight Counts
Standardized Incidental Observations
Stand Counts of Deer
Aerial Counts
Track Counts
Daylight Deer Herd and Wildlife Composition Counts
Harvest data Collection and Record Keeping
Browse Utilization Surveys
Census of Endangered, Threatened, or Protected Species
Census and Monitoring of Nongame Wildlife Species
Miscellaneous Counts

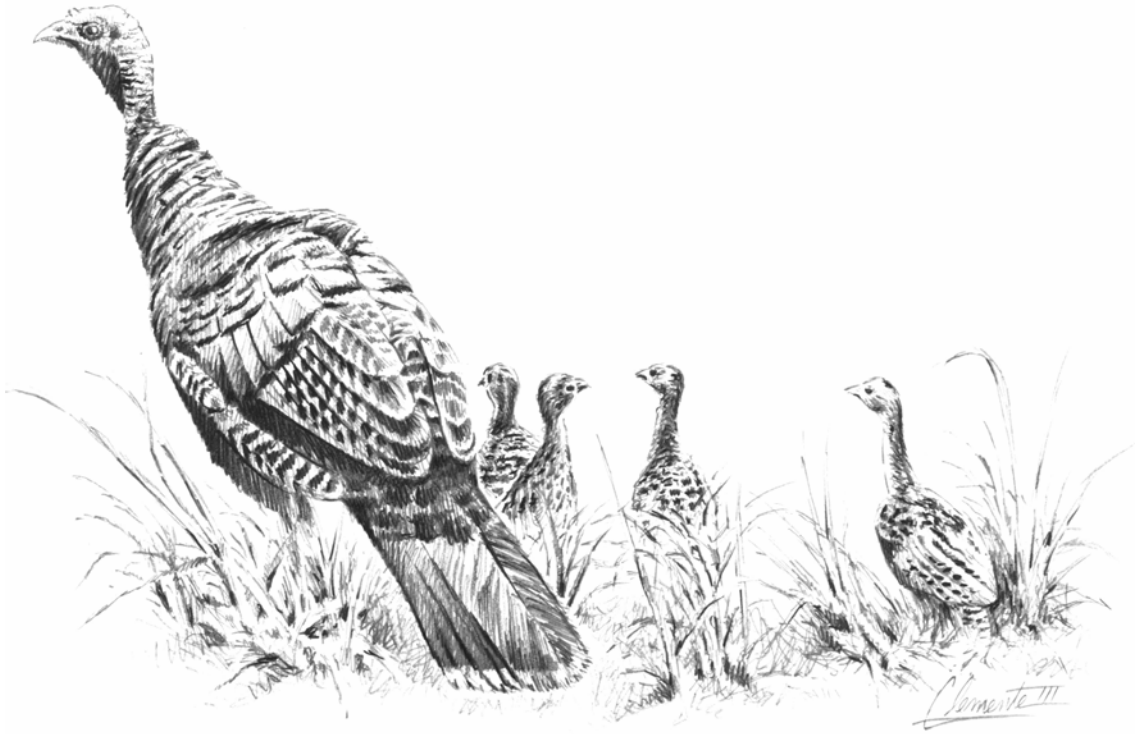

Census

Census counts are periodic surveys and inventories used to determine the number, composition or other relevant information about a wildlife population. They may be used to determine–if the current wildlife management practices are producing or sustaining the targeted species. Such surveys also help evaluate the management plan's goals and practices. Specifically, this activity estimates species numbers, annual population trends, density or age structure using accepted survey techniques. Annual results should be recorded as evidence of completing this practice. (Refer to Appendices L and M for more comprehensive information on conducting census.)

Spotlight counting animals at night along a predetermined route using a spotlight should follow accepted methodology with a minimum of three counts conducted annually. (*Spotlight surveys are not a reliable method for determining white-tailed deer densities on small acreages.)*

Aerial counts using a fixed-wing aircraft or helicopter to count animals also should follow accepted methodology for the region and be performed by a trained individual.

Daylight wildlife composition counts are driving counts used to census wildlife in daylight hours. Annual population trends on dove, quail, turkey and deer, as well as sex/age structure on deer; should be determined by sightings along a standardized transect of a minimum of five miles at least three times during a season.

Harvest data collection/record keeping means tracking annual production of wildlife. Age, weight and antler development from harvested deer, and the age and sex information from game birds and waterfowl should be obtained annually.

Browse utilization surveys annually examine deer browse plant species for evidence of deer use on each major vegetative site on the property. The surveys should be conducted in a way that can be repeated.

Census and monitoring of endangered, threatened or protected wildlife through periodic counts can improve management and increase knowledge of the local, regional or state status of the species.

Census and monitoring of nongame wildlife species also can improve management or increase knowledge of the local, regional or state status of the species. These practices can include developing checklists of wildlife diversity on the property and should be a part of a comprehensive wildlife management plan.

One of the most important things for a landowner to remember when designing a census protocol for nongame species on their property is the ability to be consistent. In other words, be able to do the same thing in the same way at the same time each and every time the census is conducted.

APPENDICES

STANDARD WILDLIFE HABITAT AND POPULATION MANAGEMENT RECOMMENDATIONS

For the

EDWARDS PLATEAU
and
CROSS TIMBERS & PRAIRIES ECOLOGICAL REGIONS

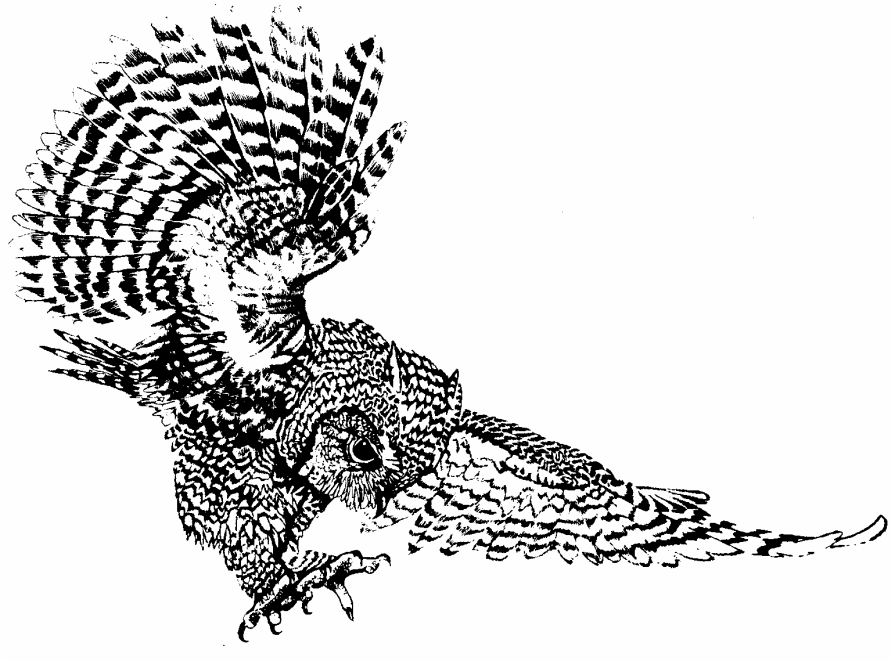

Appendix A

General Habitat Management Considerations, Recommendations, and Intensity Levels

Fundamental requirements that must be considered when managing wildlife habitat include food, cover, water and the proper distribution of these elements.

Wildlife and habitat management should be directed at maintaining a productive and healthy ecosystem. The ecosystem consists of the plant and animal communities found in an area along with soil, air, water and sunlight. All management activities should be aimed at conserving, managing, and improving the quantity and quality of soils, water and vegetation.

Managing for plant diversity is essential. A diverse habitat has a good mixture of various species of grasses, forbs (weeds), and browse (woody) plants. Many of these plants will be at various stages of growth, which adds another element of diversity. The diversity of vegetation increases the availability of food and cover for wildlife species. A greater diversity of range plants results in more food being made available during different periods of the year. The volume and diversity of plants protects the soil from erosion. The decomposition of vegetation also helps restore needed minerals to the soil to sustain plant life. Vegetation improves the water cycle by increasing water infiltration into the soil and reducing surface runoff.

An ecologically based habitat management program serves to improve water cycling, mineral cycling, and energy flow and manipulate plant succession. These processes enhance vegetative quantity, quality and diversity. A greater diversity of all life forms, including microorganisms, insects, reptiles, amphibians, birds and mammals may be achieved under sound management. The land's long term health is improved and conserved for future generations to be used as a source of income, recreation and for aesthetic enjoyment.

Plant communities with a diversity of grasses and native broad-leaved weeds (called forbs) are more productive than those comprised primarily of grasses. The climax plant community of most rangelands is comprised primarily of perennial grasses with a relatively low forb component. While this may be suitable for livestock and some grassland wildlife, most species are dependent on the seeds and foliage of forbs. Periodic disturbances such as fire, soil disturbance, livestock grazing, and mowing can set back plant succession and maintain a diverse plant community, simulating conditions under which plants and animals evolved within ecosystems in Texas.

Below is an example of a planning format that many landowners in the Edwards Plateau and Cross Timbers and Prairies Ecological Regions may find applicable to their property, depending on their particular goals and objectives. This is presented to help landowners develop a Wildlife and Habitat Management Plan. To meet the requirements of the wildlife management tax valuation, a landowner must annually

implement and complete at least one management ACTIVITIES from at least three of the seven wildlife management PRACTICES (i.e. Habitat Control, Erosion Control, Predator Control, Providing Supplemental Supplies of Water, Providing Supplemental Supplies of Food, Providing Shelter, and Making Census Counts to Determine Population). Again, a complete plan will likely include more than three activities and may include several practices under each activity.

It is important for the landowner to be able to document the wildlife management activities that have taken place during the tax year. Receipts, photographs, and maps are some of the types of documentation a landowner might want to consider using for this purpose. If requested to do so by the county tax appraisal district, the landowner may have to file an annual report, including documentation, on management activities undertaken during the year. The required fill-in-the-blank report form is attached in **Appendix U.**

Wildlife and Habitat Management Plan -

General Information

Tract Name: _____ County: _____

Owner: _____ Manager: _____

Address: _____ Address: _____

Address: _____ Address: _____

Phone: _____ Phone: _____

Phone: _____ Phone: _____

Individual Preparing the Plan: _____

Date: _____

Is property leased for hunting? Yes ☐ No ☐

Consultation is with: Owner ☐ Lessee ☐ Manager ☐

Location of Property: Distance and direction from nearest town

Is acreage under high fence? Yes ☐ No ☐

Acreage:
Cropland: Non-native Pasture:

Native Grass Pasture: Upland Woods:
Bottomland Woods: Wetlands(optional):
Ponds/Lakes: Other(specify):

Total Acres: _____

Current Habitat Description:

Describe vegetation association or type (eg., Live oak-Juniper, Post oak-Blackjack oak, Mesquite-Lotebush, Grassland Savannah). State dominant plants occurring and/or crops grown on the property. The description can include the soil types and vegetation associated with the various soil types. Describe livestock and wildlife water sources (eg., permanent or seasonal streams, springs, stock tanks, water troughs) that are present. Documentation may include any SCS (now NRCS), TPWD, or other plan, map or aerial photo that may exist for the tract to identify soils, vegetation and water sources. The plant list should include browse plants utilized by deer, if deer management is a goal (see appendix F). Also, state the degree of use on key browse plants utilized by livestock and deer.

_____
_____
_____
_____

Past History of Land Use and Wildlife:

Describe past land use practices that have been implemented such as prescribed burns, range or pasture reseeding, brush management, etc. Describe past history of cropping, livestock, and wildlife management (census, harvest, etc.). Present other information such as the presence of unique cover types, turkey roosts, or etc. Also indicate presence of feral hogs or other exotics that compete with native wildlife.

_____
_____
_____

Goals and Objectives:

A discussion and outline of landowner (also family if desired) goals and objectives for the property is necessary to define direction and to realistically assess the set of activities and practices that should be incorporated to integrate wildlife and habitat enhancement.

(Select one or more to guide the wildlife and habitat planning process)

1. Improve habitat for native game species (as designated in the Texas Hunting Guide.)

2. Improve habitat for native nongame species (those species not listed as game species, e.g., songbirds).

3. Manage for habitat and wildlife diversity.

4. Restore, maintain or improve native habitats for wildlife diversity.

5. Generate revenue from native wildlife resources.

6. Improve habitat for rare native species.

7. Protect sensitive habitats or critical species.

8._____

9._____

10._____

11._____

12._____

Management Practices Normally Beneficial for Representative Wildlife in the Edwards Plateau and Cross Timbers Ecoregions	White-tailed Deer	Fox Squirrel	Cottontail Rabbit	Wild Turkey	Bobwhite Quail	Mourning Dove	Wood Duck	Red-Tailed Hawk	Eastern Bluebird	Mexican Free-tail Bat	Black-capped Vireo	Golden-cheeked Warbler
A. HABITAT CONTROL												
Grazing Management	X	X	X	X	X	X	X	X	X	X	X	X
Prescribed Burning	X		X	X	X	X		X	X	X	X	
Range Enhancement (Reseeding)	X		X	X	X	X		X	X		X	
Brush Management	X	X	X	X	X	X		X	X		X	X
Riparian Management / Enhancement	X	X	X	X	X	X	X	X	X	X	X	X
Wetland Enhancement	X		X				X	X				
Habitat Protection-Species of Concern											X	X
Prescribed Control-Native,Exotic,Feral Species	X	X	X	X	X		X		X		X	X
Wildlife Restoration	X			X								
B. EROSION CONTROL												
Pond Construction	X			X		X	X			X		
Gully Shaping												
Streamside, Pond, Wetland Regeneration	X		X	X	X	X	X					
Herbaceous &/or Woody Plant Establishment	X	X	X	X	X	X	X		X		X	X
Dike / Levee Construction / Management							X					
Establish Water Diversion												
C. PREDATOR CONTROL												
Predator Management	X		X	X	X		X		X		X	X
Imported Red Fire Ant Control	X		X	X	X	X			X			
Cowbird Control						X					X	X
Grackle / Starling / House Sparrow Control						X			X		X	X
D. PROVIDING SUPPLEMENTAL WATER												
Marsh / Wetland Restoration							X			X		
Wells/Troughs/Windmill Overflow	X		X	X	X	X			X	X	X	X
Spring Development &/or Enhancement	X	X		X			X			X		X
E. PROVIDING SUPPLEMENTAL FOOD												
Grazing Management	X	X	X	X	X	X	X	X	X	X	X	X
Prescribed Burning	X		X	X	X	X		X	X	X	X	
Range Enhancement	X		X	X	X	X		X	X		X	
Food Plots	X		X	X	X	X						
Feeders & Mineral Supplementation	X			X	X	X						
Managing Tame Pasture, Old Fields, Croplands	X		X	X	X	X		X	X			
Transition Mgt. of Tame Grass Monocultures	X		X	X	X	X		X	X			
F. PROVIDING SUPPLEMENTAL SHELTER												
Nest Boxes, Bat Boxes		X					X		X	X		
Brush Piles & Slash Retention			X	X	X			X	X			
Fence Line Management		X	X	X	X	X		X	X			
Hay Meadow, Pasture, & Cropland Management	X		X	X	X	X		X	X			
Half Cutting Trees & Shrubs			X	X	X							
Woody Plant / Shrub Establishment	X	X	X	X	X						X	X
Natural Cavity / Snag Development		X					X	X	X	X		
G. CENSUS												
Spotlight Counts	X											
Aerial Counts	X											
Daylight Deer Herd / Wildlife Composition Counts	X											
Harvest Data / Record Keeping	X	X	X	X	X	X	X					
Browse Utilization Survey	X											
Census & Monitoring of Endangered, Threatened, or											X	X
Census & Monitoring of Nongame Species								X	X	X		
Miscellaneous Counts		X	X	X	X	X	X					

Specific Habitat Management Practices, By Activity

HABITAT CONTROL

GRAZING MANAGEMENT

(Refer to Appendix D - Livestock Recommendations, for information to help prepare a specific grazing proposal for the plan.)

Good grazing management that includes deferment and rest for pastures enhances vegetative quantity, quality, and diversity.

Grazing management, which may include deferment, is the planned manipulation of livestock numbers and grazing intensities to increase food, cover, or improve structure in the habitat of selected species. Grazing management includes: 1) kind and class of livestock grazed, 2) determination and adjustment of stocking rates, 3) implementation of a grazing system that provides planned periodic rest for pastures by controlling grazing intensity and duration, and/or 4) excluding livestock from sensitive areas to prevent trampling, allow for vegetative recovery, or eliminate competition for food and cover. Planned deferments can be short or long term up to 2 years. Extended rest from grazing (two years or more, if necessary) may be required on some ranges. Seasonal stocker operations may be appropriate to manipulate habitat. Supplemental livestock water (earthen tanks, troughs, wells, piping) to facilitate deferred-rotation grazing of livestock and disperse grazing pressure may be incorporated into planning to improve wildlife habitat. Similarly, it is important to plan and design fence construction to facilitate deferred-rotation grazing of livestock. Fencing can also be used to enhance or protect sensitive areas, woodlands, wetlands, riparian areas and spring sites as designated in plan. Activities should be reviewed annually.

Grazining management systems might include:

- 1 Herd / 3 Pasture (preferably as a step in moving toward a 1 herd / multiple pasture {4+} grazing system)

- 1 Herd / 4 Pasture
- 1 Herd / multiple pasture multiple herd / multiple pasture (goal is to move toward always resting 75% of area)
- High intensity/low frequency (HILF)
- Short duration system
- Other type of grazing system (ex. a short-term stocker system):
- Planned Deferment (e.g., number of years livestock will be deferred from the property, etc.):

PRESCRIBED BURNING

(Refer to Appendix E - Vegetation Management Recommendations, for information to help prepare a specific burning proposal for the plan.)

Using a drip torch to create a prescribed fire is an excellent management practice that simulates the natural cycles that these ecosystems evolved under, and enhances habitats and plant diversity.

Prescribed burning is the planned application of fire to enhance habitat and plant diversity, control invasive woody species, increase food, manipulate cover, or improve structure in the habitat of selected species. Plans should indicate a minimum percent of acreage and general burning cycle **(eg., minimum of 15 percent of acreage burned over 7 years in the Edwards Plateau or Cross Timbers and Prairies**). A written burning plan as an addendum to the Wildlife and Habitat Management Plan (burn plans and prescribed burning should only be attempted with aid of professionals). The plan should include a map that shows the areas to be burned and the planned dates (month and year) that each area will be burned during the burning cycle. It should also designate areas to be protected from burning, and should incorporate flexibility during periods/years when conditions are not favorable. Specific areas (e.g., sensitive sites) to be protected from burning should be briefly described and shown on a map.

RANGE ENHANCEMENT (Range Reseeding)

Establish native herbaceous plants (grasses and forbs) that provide food and cover for wildlife or erosion control benefits. Plant species selected and methods for establishment should be applicable to the ecological region (non-native species are generally not recommended, but if required for a specific purpose, non-native species

should not exceed 25 percent of the seeding mix). If non-native species must be used to achieve a specific goal, species used **must not** be invasive or aggressive. Seeding mixtures providing maximum native plant diversity are recommended. Many herbaceous broadleaf plants (known as forbs - weeds and wildflowers) are beneficial to wildlife for forage and/or seed production. Encourage "weed and wildflower" species by selective application of chemical, biological (eg., grazing management) and/or mechanical means on native rangelands, Conservation Reserve Program lands, and tame grass pastures (eg., coastal bermuda). Some periodic weed control may be needed in fields converted to native rangeland to assist in the establishment of desirable vegetation. This practice must be a part of an overall habitat management plan and designed to reestablish native habitats within a specified time frame. **Range Enhancement should annually affect a minimum of 10% of the total area designated in the plan, or a minimum of 10 acres annually, whichever is smaller, until the project is completed.**

BRUSH MANAGEMENT

(Refer to Appendix E - Vegetation Management Recommendations, for information to help prepare a specific brush management proposal for the plan.)

Brush management may be the removal or establishment of woody plants.

It can be the selective removal or suppression of target woody species, including exotics, to allow the increased production of desirable trees, shrubs, grasses, and forbs for forage, nesting, or protective cover for selected species. **Brush Management practices should annually affect a minimum of 10% of the total area designated in the plan, or a minimum of 10 acres annually, whichever is smaller.** This practice includes retaining the proper kind, amount, and distribution of woody cover for selected species. Brush management planning must consider wildlife cover requirements, soil types, slope angle and direction, soil loss and erosion factors, and subsequent planning to control re-invasion. This practice also includes retention of snags to provide cover and nesting sites for cavity nesting animals. When used, herbicides should be applied in strict accordance with label directions. See Appendix Y.

This practice can include the planting of native tree and shrub species to provide food, corridors and/or shelter using species and methods as described in appendices.

RIPARIAN MANAGEMENT AND ENHANCEMENT

Annually and seasonally protect the vegetation and soils in riparian areas (low areas on either side of stream courses) from mismanagement, such as that caused by excessive, long-term livestock trampling. Riparian management and enhancement can include providing livestock with alternate watering sites, deferring livestock grazing in pastures with riparian areas during critical periods of the year, total exclusion of livestock from pastures with riparian areas, and fencing riparian areas to exclude or provide short duration grazing by livestock. Establish trees, shrubs, or herbaceous vegetation along streams or water courses to provide food, cover, and travel corridors, and to reduce erosion. Corridors should be at least 100 yards wide. Refer to "Agroforestry Notes - A Riparian Buffer Design for Cropland" (AF Notes-5, January 1997) by the U.S. Forest Service that gives details for establishing a 50 ft. wide strip of grass, shrubs, and trees between a stream and cropland. Restore important forested habitats including bottomland hardwoods and turkey roost sites. **A minimum of one Riparian Management and Enhancement project must be implemented and maintained every 10 years to qualify.** See Appendix E.

Proposed riparian management and enhancement projects might include:

- Fencing
  - complete fencing of riparian areas
  - partial fencing of riparian areas
- Deferment from livestock grazing
  - complete deferment
  - partial deferment.
- Establish vegetation
  - trees
  - shrubs
  - herbaceous
  - both sides of stream
  - one side only

Over 50% of Texas' wetlands have disappeared. Wetland management, restoration or creation is extremely important for wetland dependent wildlife

WETLAND ENHANCEMENT

Annually provide seasonal or permanent water for roosting, feeding, or nesting habitat for wetland wildlife. This practice involves shallow wetland management (creation or

restoration), greentree reservoir creation or management, and other moist soil management such as rotational grazing or exclusion (fencing out) of livestock from wetlands, especially during the growing season. This practice should be a part of an overall habitat management plan. Annual management as described in management plan, such as water level manipulation qualifies. **Construction and maintenance of a new project will qualify for 10 years**.

HABITAT PROTECTION FOR SPECIES OF CONCERN

Planned protection and management of land or a portion of land to provide habitat for an endangered, threatened or rare species, such as fencing off critical areas, managing vegetation structure and diversity within species parameters, establishing and maintaining firebreaks to protect critical overstory vegetation, and annually monitoring the species of concern. This practice includes the management/protection of nesting sites, feeding areas, and other critical habitat limiting factors, and the development of additional areas.

The broad-scale management of habitat for migrating/wintering/ breeding Neotropical birds (primarily songbirds) should follow guidelines in appendix for zones of importance (See Appendix J).

Refer to Appendix I for guidelines on the management of the habitats for the endangered golden-cheeked warbler and black-capped vireo which occur in portions of the Edwards Plateau and Cross Timbers and Prairies Ecological Regions.

A minimum of one project must be implemented every 10 years to qualify.

Proposed projects for habitat protection for species of concerns might include:

- Planned protection/management projects:
- fencing
- firebreaks
- prescribed burning
- habitat manipulation (e.g. thinning, etc.)
- control of nest parasites
- native/exotic ungulate control
- other_____

PRESCRIBED CONTROL OF NATIVE, EXOTIC AND FERAL SPECIES

Use legal means to control the number of grazing and browsing animals. Maintain the population density of native wildlife (particularly white-tailed deer — see Appendix F) at the carrying capacity of the habitat to prevent overuse of desirable plant species and enhance habitat for native wildlife species. **Populations of exotics, feral animals, and wildlife should be strictly controlled to minimize negative impact on native**

wildlife and habitat. This should incorporate harvest and vegetative monitoring over time to assess control intensity and impact on habitat to meet plan objectives.

Remove or control exotic vegetation impacting native habitats and wildlife populations (eg., large stands of naturalized salt cedar, etc.). Convert tame pasture grasses (such as large areas of coastal bermuda, klinegrass, old world bluestems) to native vegetation. **The removal or control of exotic vegetation or the conversion of tame grass pastures must affect a minimum of 10% of the area designated in the plan, or 10 acres annually, whichever is smaller**.

Feral hogs compete directly with native wildlife, and very destructive of habitats.

WILDLIFE RESTORATION

Restoration or enhancement of habitat to good condition for target species, and reintroduction and population management of TPWD approved native species within the carrying capacity of the habitat as part of an approved restoration area at a scale capable of supporting a sustainable population (e.g., eastern turkey).

EROSION CONTROL

POND CONSTRUCTION AND MAJOR REPAIR

Construction or major repair of a permanent water pond for the purpose of preventing, stopping, or controlling erosion as part of an approved NRCS erosion control structure. The project must provide habitat diversity and wildlife benefits. Creation/restoration of shallow water areas as primary production wetlands and associated water level control and management should be associated with ponds at every opportunity. **A minimum of one project must be implemented and maintained every 10 years to qualify**.

GULLY SHAPING

Reducing erosion rates on severely eroded areas by smoothing with top soil to acceptable grades and reestablishing vegetation, primarily native vegetation, with sensitivity to existing wildlife cover and woody vegetation that provides travel corridors. Area must be interseeded with species that provide food and/or cover for wildlife to be applicable (see range enhancement guidelines). This practice may include the feeding of large numbers of cattle on gully sites to contour the eroded areas by way of hoof action to aid in the recovery of the site. **A minimum of one project must be implemented and maintained every 10 years to qualify.**

STREAMSIDE, POND, AND WETLAND REVEGETATION

Re-vegetating areas along creeks, streams, ponds, and wetlands to reduce erosion and sedimentation, stabilize stream banks, improve plant diversity, and improve wildlife value of sensitive areas. This practice can include: (a) the construction of permanent or temporary fences to exclude, limit, or seasonally graze livestock in order to prevent erosion; (b) the use of native hay to slow and spread water runoff in areas where vegetation has been recently reestablished (seeds in the hay aid in re-vegetation); (c) establishing vegetative buffer areas or filter strips along water courses or other runoff areas; (d) establishment of 3:1 upland buffer to lake basin/wetland acreage in diverse grass/legume/forb mixture to prevent sedimentation; (e) the installation of rip-rap,

dredge spoil, or other barrier material - placement of material along erodible embankments to prevent erosion and protect wildlife habitat; (f) the establishment of stream crossings to provide permanent low water crossings in order to reduce or prevent erosion. **A minimum of one project must be implemented and maintained every 10 years.**

Proposed streamside, pond, and wetland restoration project(s) may include the following techniques:

- native hay bales
- fencing
- filter strips
- seeding upland buffer
- rip-rap, etc.
- stream crossings

PLANT ESTABLISHMENT ON CRITICAL AREAS (erodible)

Primarily for erosion control, the establishment of native woody or herbaceous vegetation can also provide food and/or cover for wildlife and restore native habitat. This practice can include: (a) establish and manage wind breaks/shelter-belts by planting multi-row shelter-belts (at least 4 rows in 120' width by1/4 mile in length), renovate old shelter-belts (re-fence, root-prune, and replace dead trees), and establish shrub mottes, improve plant diversity, and improve wildlife habitat; (b) establish perennial vegetation on terraces and field borders (30 yard minimum width) to reduce erosion, improve plant diversity, and improve wildlife habitat; (c) conservation tillage/no-till farming practices by leaving waste grain and stubble on the soil surface until the next planting season to provide supplemental food or cover for wildlife, control erosion, and improve the soil tilth; (d) manage Conservation Reserve Program cover by maintaining perennial cover established under the Conservation Reservation Program (expired contracts) on erodible sites using proper management techniques such as haying, prescribed grazing or prescribed burning. **A minimum of 10 seedlings per acre must be planted and maintained annually on 10 acres or a minimum of 10% (whichever is smaller) of the total designated area treated annually.**

DIKE/LEVEE CONSTRUCTION/MANAGEMENT

To establish/maintain wetlands or slow runoff to control or prevent erosion, and to provide habitat for wetland dependent wildlife. Levee management may include reshaping or repairing damage caused by erosion, re-vegetating levee areas to reduce erosion and sedimentation, and stabilizing levees. This practice may include fencing to control and manage grazing use or installation of water control structures. **A minimum of one project must be completed and maintained every 10 years.**

ESTABLISH WATER DIVERSION

Install water diversion systems that will protect erodible soils and divert water into wetlands to provide habitat for resident and migratory water birds and wetland dependent species. Seed diversion areas to species tolerant of seasonally standing water. **A minimum of one project must be completed and maintained every 10 years.**

A flashboard riser box attaches to a pipe installed in a levee to create a shallow water wetland for wildlife.

PREDATOR CONTROL

PREDATOR MANAGEMENT

The management of predator populations to increase survival of target species. Key native predator species may include coyote, raccoon, bobcat, mountain lion, and rat snakes, while exotic predators may include feral house cat, feral dog, and feral hogs (see imported red fire ants in separate paragraph). Predator Control alone will not be an applicable practice unless it is part of an overall plan to manage the habitats and populations of the target species. Texas Parks and Wildlife Department advocates elimination of feral/exotic predators, with the thoughtful management of native predators as an integral part of functioning natural systems. **The predator control plan should be prepared or approved by a competent professional and include the list, duration and intensity of methods to remove the target species annually.**

IMPORTED RED FIRE ANT CONTROL

To protect native wildlife species or their food base, including native fire ants which seem to restrict the spread of the imported fire ants**; proper treatment of at least 10 acres or 10% of infested area per year, whichever is more.** Treatment will comply with pesticide label instructions. Additional information is available in Appendix P and on the internet at http://fire ant.tamu.edu

CONTROL OF COWBIRDS

Reducing populations of these birds for the purpose of decreasing nest parasitism of target Neotropical bird species (e.g. endangered Black-capped Vireos and other songbirds) in a PLANNED PROGRAM (see Appendix J, K, and Q). **Removal of at least 30 cowbirds annually is required to qualify.**

GRACKLE/STARLING/HOUSE SPARROWS CONTROL

Reducing populations of grackles and/or starlings and/or house sparrows for the purpose of controlling avian diseases and reducing overcrowding to exclusion of other avian fauna in a planned program (see Appendix J) particularly targeting white-winged dove and other Neotropical birds. **Removal of at least 30 grackles/starlings/house sparrows annually is required to qualify.**

Proposed Grackle/Starling/House Sparrow Control Project(s) may include:

- trapping
- shooting
- scare tactics

PROVIDING SUPPLEMENTAL WATER

* This category includes providing supplemental sources of water specifically for wildlife in habitats where water is limited. Wildlife water developments are in addition to those sources already available to livestock and may require protection from livestock.

MARSH/WETLAND RESTORATION OR DEVELOPMENT

Provide supplemental water in the form of shallow wetlands for wetland dependent wildlife. Applicable even in areas where water is not a critical limiting factor for upland species of wildlife. May include seasonally available water such as greentree reservoirs, specific shallow roost pond development, seasonally flooded crops and other areas, artificially created wetlands, marsh restoration-development-protection, prairie pothole restoration/development/protection, and moist soil management. Based on wildlife needs and suitability of the property, the annual manipulation with control structures is desirable. **Minimum requirement of one marsh/wetland restored or developed per 10 years. Annual water management of project or existing wetland qualifies.** Call for TPWD OR NRCS for professional assistance when creating/enhancing wetlands.

WELL/TROUGHS/WINDMILL OVERFLOW/OTHER (ROOF RAINWATER HARVESTING) WILDLIFE WATERING FACILITIES

Designing and implementing water systems that provide supplemental water for wildlife and provide habitat for wetland plants. This practice may include modifying existing water systems to make water more accessible to wildlife (e.g. fenced windmill overflows available to wildlife on the ground). It may also include drilling wells if necessary and/or constructing pipelines to distribute water and/or diverting water with specialized wildlife watering facilities. Water may be distributed on a ¼ mile basis to enhance distribution and abundance of a variety of wildlife species. **A minimum of one project per 10 years must be completed to qualify. Consistent water management for wildlife at sites qualifies.**

Proposed Well/Troughs/Windmill Overflow/Other Wildlife Watering Facility Project(s) may include: (see Appendix O) or http://rainwaterharvesting.tamu.edu/how.html for additional information.

- Drill new well:
  - windmill
  - pump
  - pipeline
- Modification(s) of existing water source:
  - fencing
  - overflow
  - trough modification
  - pipeline
- Distance between water sources {waters}_____

- Type of Wildlife Watering Facility
  - PVC/Quickline/Other Pipe Facility
  - Drum with Faucet or Float
  - Small Game Guzzler
  - Windmill Supply Pipe Dripper
  - Plastic Container
  - In-ground Bowl Trough
  - Big Game Guzzler
  - Inverted Umbrella Guzzler
  - Flying Saucer Guzzler
  - Ranch Specialties Wildlife Guzzler
  - Other_____

Capacity of Water Facility(ies): _____

SPRING DEVELOPMENT AND/OR ENHANCEMENT

Implementing methods designed to protect the immediate area surrounding a spring. This practice may include excluding and/or controlling livestock around springs to maintain native plant and animal diversity and/or moving water through a pipe to a low trough or shallow wildlife water overflow, making water available to livestock and wildlife while preventing degradation of the spring area from trampling and other animal impacts. It could also include restoring a degraded spring by the controlled, possibly multi-year, removal of dense brush and the revegetation of drainages and canyons with herbaceous plants at historic springs, and maintaining the restored spring as a source of wildlife water. Maintaining critical habitat, nesting and roosting areas for wildlife and preventing soil loss and erosion must be considered when planning and implementing brush removal. **A minimum of one project per 10 years must be completed to**

qualify. Existing or restored springs consistently managed to prevent degradation qualifies.

Proposed Spring Development and/or Enhancement Project(s) may include the following:

- Fencing
- Water diversion/pipeline
- Brush removal
- Spring clean out
- Ponds, stock tanks, water impoundments (see stock ponds, tanks, lakes)

PROVIDING SUPPLEMENTAL FOOD

GRAZING MANAGEMENT

(This is identical to Grazing Management in Activity A. Refer to Grazing Management in Activity A for information to prepare a specific grazing proposal for the plan under this Activity).

PRESCRIBED BURNING

(This is identical to Burning Prescribed in Activity A. Refer to Prescribed Burning in Activity A for information to prepare a specific burning proposal for the plan under this Activity)

RANGE ENHANCEMENT (Range Re-Seeding)

(This is identical to Range Enhancement (Reseeding) in Activity A. Refer to Range Enhancement (Range Reseeding) in Activity A for information to prepare a specific range enhancement proposal for the plan under this Activity)

FOOD PLOTS

The establishment of locally adapted annual (spring and fall) or perennial forages on suitable soils to provide supplemental foods and cover during critical periods of the year. Livestock should be generally excluded from small food plots. The shape, size, location, and percentage of total land area should be based on requirements for the target species (e.g., 2-5% of area for white-tailed deer) and should meet goals of a comprehensive wildlife plan. **A minimum of 1% of the acreage should be planted in seasonal food plots.**

Managing the habitat for proper nutrition should be the primary management goal. Supplemental feeding and/or planting of food plots are not a substitute for good management. These practices should only be considered as "supplements" to the native habitat, not as "cure-alls" for low quality and/or poorly managed habitats. Supplemental feeding should always be combined with population management or the resulting artificially higher numbers of animals will have a negative impact on native plants. Consult with the NRCS, TCE, TPWD, and local seed dealers for food plot mixtures suitable for your area, as well as local soil conditions. Plant according to soil tests (through TCE County Extension Agent) and fertilize as necessary.

Proposed Food Plots Project(s) may include the following considerations:

- Size(s)_____
- Fencing required?
    - yes
    - no
- Plantings:
    - cool season annual crops, i.e. wheat, rye, clovers, etc.
    - warm season annual crops, i.e. sorghums, millets, cowpeas, etc.
    - annual mix of native plants
    - perennial mix of native plants
- Irrigation required?
    - yes
    - no
- Fertilizer recommended?
    - yes
    - no

FEEDERS AND MINERAL SUPPLEMENTATION

Dispensing supplemental foods from artificial devices to meet the dietary requirements of selected wildlife species during critical periods of the year. Attractants for hunting do not apply unless used for selective harvest to control excessive numbers of deer and/or exotic ungulates as defined within a comprehensive wildlife management plan with a targeted harvest quota that is regularly measured and achieved or nearly so. Aflatoxin levels in feed should not exceed 20 ppb. Mineral supplementation may be supplied by means other than artificial devices (poured on ground, blocks, etc.). This practice must be a part of an overall habitat management plan that addresses all animal units and attempts to maintain populations below carrying capacity. **A minimum of one free-choice feeder per 320 acres in use during the recommended time period, with a minimum of 16% crude protein feed (See Appendix F for deer), required to qualify.**

Proposed Feeders and Mineral Supplementation Project(s) should include the following considerations:

- Purpose:
    - supplementation

    - harvesting of wildlife
- Targeted wildlife species
- Feed type
- Mineral type
- Feeder type
    - Number of feeders
- Method of mineral dispensing
    - Number of mineral locations
- Year round
    - yes
    - no, if not, when practiced_____

MANAGING TAME PASTURE, OLD FIELDS AND CROPLANDS

This practice may include: a) over-seeding or planting cool season and/or warm season legumes and/or small grains in pastures, easements (pipelines), or range land in order to provide a supplemental food for wildlife, b) using plant materials and establishment methods applicable to the county; c) periodic ground disturbance through shallow discing that encourages habitat diversity, d) the production of native grasses and forbs for supplemental foods, or d) increasing bare ground feeding habitat for selected species. Conservation tillage practices are recommended that leave waste grain and stubble on the soil surface until the next planting season to provide supplemental food or cover for wildlife, control erosion, and improve soil tilth. Shred, disk, and/or fertilize native vegetation to improve the growth and quality of plants. Many broadleaf plants (forbs - weeds and wildflowers) are beneficial to wildlife for forage and/or seed production. Encourage "weed and wildflower" species by selective application of chemical, biological (e.g., grazing management) and/or mechanical means on native range lands and improved grass pastures. **A minimum of 3 percent of the designated area must be treated annually to qualify.**

TRANSITION MANAGEMENT OF TAME GRASS MONOCULTURES

Transition from tame grass to native grass communities should include annually overseeding improved grass pastures with locally adapted legumes (e.g., clovers, vetches, peas) to increase the plant diversity, provide supplemental wildlife foods, and gradually convert the tame pastures to native vegetation as per wildlife and habitat plan. Legumes should be planted annually until all pastures are established to native vegetation. **A minimum of 25 percent of the designated area must be treated annually to qualify.**

PROVIDING SUPPLEMENTAL SHELTER

The best shelter and cover for wildlife is provided by a well managed habitat. Some practices can be implemented to provide types of shelter that may be limited in the habitat.

NEST BOXES, BAT BOXES

The installation of artificial boxes or cavities to provide nesting or denning habitat for selected species. **Number and location of nest boxes should be consistent with habitat needs and territorial requirements of the target species, and sufficient over the area to provide a real supplement to the target population and address an identified severe limiting factor as part of a comprehensive wildlife management plan.**

Proposed Nest Boxes, Bat Boxes Project(s) may include:

- Target species?
- Box type:
  - cavity type.
  - bat boxes.
  - raptor poles.

BRUSH PILES AND SLASH RETENTION

The planned placement and/or retention of brush piles to provide additional wildlife cover in habitats where cover is a limiting factor for the selected species. This practice also includes slash retention, or leaving dead brush on the ground where it was cut or uprooted, to provide wildlife cover and protection for seedlings of desirable plant species. Stacking posts or limbs in tepees can provide cover for small game and other wildlife in open areas. **A minimum of 1 percent of the designated area must be treated annually to qualify.**

FENCE LINE MANAGEMENT

Maintain, establish, or allow the establishment of trees, shrubs, forbs, and grasses on fence lines to provide wildlife food and cover a minimum of 30 yards wide. This practice is only applicable where cover is limiting in the habitat, i.e. cropland or tame pasture. **A minimum length of 100 yards of Fence Line Management per 1/4 mile of fence is required annually to qualify.**

HAY MEADOW, PASTURE AND CROPLAND MANAGEMENT FOR WILDLIFE

Mowing/swathing of hay fields should be postponed until after the peak of nesting/rearing period of birds and mammals (July 15). A wide bar should be placed on the front of the tractor at a height of 1' when mowing to help flush wildlife using this cover. Weeds are an important source of food for many wildlife species, therefore minimize weed control practices. Use no till/minimum till agricultural practices to leave waste grain and stubble on the soil surface until the next planting season to provide supplemental food or cover for wildlife, control erosion, and improve soil tilth. Other forms of supplementing and providing shelter include roadside right-of-way management for ground-nesting birds, establishing perennial vegetation on circle irrigation corners, levees, dikes, terraces, fencerows and field borders, establishing multi-row shelterbelts or renovating old shelterbelts, and protecting and managing old homesites, farmsteads and Conservation Reserve Program cover. **Annually mow/shred 25% of open areas per year, preferably in strips or mosaic types of patterns, to create "edge" and structural diversity**.

Proposed Hay Meadow, Pasture and Cropland Management Project(s) should consider:

- Acreage to be treated
- Shelter establishment:
  - irrigation corners
  - road side management
  - terrace/wind breaks
  - field borders
  - shelterbelts
- Conservation Reserve Program lands management
- Type of vegetation for establishment:
  - annual
  - perennial
- List species and percent of mixture
- Deferred mowing
  - Period of deferment
- Mowing
  - Acres mowed annually
- No till/minimum till

HALF-CUTTING TREES OR SHRUBS

The practice of partially cutting branches of a live tree or shrub to encourage horizontal, living cover near the ground, providing supplemental cover in habitats where cover is

lacking (see TPWD Bulletin 48) relative to an overall plan for target wildlife species. This practice is best done in the early or middle part of the growing season. **A minimum of one clump of trees/shrubs per 100 yards on at least 10 percent of acreage or 10 acres, whichever is smaller, annually to qualify.**

In open areas with very little near-ground cover, cutting half-way through the lower mesquite limbs and breaking them to the ground can form a "cage" that provides escape and roost cover for wildlife.

Woody Plant/Shrub Establishment

Planting and protecting native seedlings to establish wind rows and shrub thickets, or to restore wooded habitats within former croplands, tame pastures or CRP land. Plantings should consist of native trees and shrubs that produce hard or soft mast, or provide nesting or escape cover. Plantings should be made in groups to provide both cover and additional food rather than scattered individual trees. See Appendix W for a list of native plants and shrubs.

Girdling trees is an effective means of creating snags, but be selective by avoiding mast producing trees (oaks, hickories) and judicious in extent.

NATURAL CAVITY/SNAG DEVELOPMENT

Retain and create snags for cavity-dwelling species. Undesirable trees can be girdled or individually treated with herbicide and left standing. **A minimum of 5 snags per acre, on 5 percent of the acreage, must be retained/created annually to qualify.**

CENSUS

A spotlight survey is an effective method to track deer populations, as well as rabbits and furbearers. This can also bring neighbors together in a common activity.

This activity provides an estimate of species numbers, population trends, population density, age structure, or sex ratio using accepted survey techniques. Results of annual surveys should be recorded on appropriate forms as evidence of completion of this practice. Selection of specific survey techniques should be appropriate to the species of interest and at a level of intensity to achieve proper management of the resource in connection with a comprehensive wildlife management plan.

<u>Note:</u> For census activity to qualify for deer, a combination of methods must be used to obtain a reasonable assessment of the deer herd for habitat and harvest management. For most properties, this will require spotlight surveys, daylight or incidental observations, and harvest data for all deer (age, weight, and antler measurements). Similar intensity should be applied for other species to qualify in this activity.

SPOTLIGHT COUNTS

Counting animals at night along a predetermined route using a spotlight. Spotlight counts should follow accepted methodology. **A minimum of three counts, or a minimum of 15 surveyed miles, must be completed annually.**

AERIAL COUNTS

Use of a fixed-wing aircraft or helicopter to count animals. **Counts should employ accepted methodology for the region and be performed by a trained individual annually.**

DAYLIGHT DEER HERD/WILDLIFE COMPOSITION COUNTS/PHOTO STATIONS

Counts used to census deer in daylight hours to enhance information of sex/age structure (buck/doe/fawn), as well as determine annual trends in populations through dove, quail, and turkey sightings. **Counts should be conducted on standardized transects along 5 mile minimum lines and run at least 3 times (if shorter lines or**

used, a total of at least 15 miles must be surveyed), or through other standardized methodology to obtain at least 100 observations. On smaller tracts, as least five separate, two hour counts during early morning or late afternoon from deer stands (blinds) may be used.

HARVEST DATA COLLECTION/RECORD KEEPING

Collect all age, weight, and antler development data from harvested deer. Age and sex information should be obtained from game birds and waterfowl to determine sex ratios and annual production.

Keeping good harvest records is essential to understanding effects on target populations. Lower jaw bones are used to age deer, and deer aging publications may be obtained from Texas Parks and Wildlife or your County Extension Agent.

BROWSE UTILIZATION SURVEYS

Annually (normally during the winter) examine deer browse species for degree of utilization on each major vegetative site on the property through vegetation analysis and stem counts.

CENSUS OF ENDANGERED, THREATENED, OR PROTECTED WILDLIFE

Regular, periodic counts of the target species used to enhance management or increase knowledge of local, regional, or state status.

CENSUS AND MONITORING OF NONGAME WILDLIFE SPECIES

Regular, periodic counts of nongame wildlife species used to enhance management or increase knowledge of local, regional, or state status. This practice would also include developing checklists of wildlife diversity for the property and should be a part of a comprehensive wildlife management plan.

MISCELLANEOUS COUNTS:

Specific species may require special survey techniques. These may include the following and should be addressed in the management plan:

- Time/area counts

- Roost counts
- Song bird transects and counts
- Quail call and covey counts
- Point counts
- Drift fences and pitfall traps
- Small mammal traps
- Bat census (ex. Departures)
- Other. Describe: _____

Appendix B

New Rules Summary

The following is a summary of changes made by the new rules that were adopted on December 11, 2008. Our purpose is to give an overview of rule changes for use by landowners and those that assist them. If you have questions, please contact Linda Campbell (512-389-4395) or Todd George (512-389-4329), Texas Parks and Wildlife Department, Austin.

1. New definitions have been added and some existing definitions have been clarified

- Wildlife Management Practices are defined as those listed in the Tax Code (23.51(7)(A) - Habitat Control, Erosion Control, Predator Control, Providing supplemental supplies of water, Providing supplemental supplies of food, providing shelters, Making census counts to determine population.
- Wildlife Management Activities are defined as methods of implementing wildlife management practices as described in the TPWD guidelines for each region.
- The definition of a tract of land was changed to clarify that tracts of land will be considered contiguous even though they are bisected by a public road or body of water.
- The definition of Wildlife Management Property Association was changed to clarify that tracts of land of landowners in the association will be considered contiguous even though they are bisected by a public road or body of water. Other requirements are the same.
- The term sustained breeding population was changed to breeding population to be consistent with the Tax Code and because the term sustained refers to breeding, migrating, and wintering populations of wildlife. The definition is the same.
- The term Wildlife Use Percentage has been changed to Wildlife Use Requirement in recognition that the formula that determines the minimum acreage requirements is not actually a percentage of use.
-

2. Changes to the Wildlife Use Appraisal Regions

The appraisal regions have been reorganized to more closely track the defined ecological regions as specified in the TPWD Wildlife Management Guidelines. If a county is in more than one ecological region, the region that comprises the majority of the county was selected.

Trans Pecos

- Brewster
- Crane
- Culberson
- El Paso
- Hudspeth
- Jeff Davis
- Loving
- Pecos
- Presidio
- Reeves
- Terrell
- Ward
- Winkler

High Plains

- Andrews
- Armstrong
- Bailey
- Carson
- Castro
- Cochran
- Crosby
- Dallam
- Dawson
- Deaf Smith
- Ector
- Floyd
- Gaines
- Glasscock
- Hale
- Hansford
- Hartley
- Hockley
- Howard
- Hutchinson
- Lamb
- Lubbock
- Lynn
- Martin
- Midland
- Moore
- Ochiltree
- Oldham
- Parmer
- Potter
- Randall
- Sherman
- Swisher
- Terry
- Upton
- Yoakum

Rolling Plains

- Archer
- Baylor
- Borden
- Briscoe
- Callahan
- Childress
- Clay
- Coke
- Coleman
- Collingsworth
- Concho
- Cottle
- Dickens
- Donley
- Fisher
- Foard
- Garza
- Gray
- Hall
- Hardeman
- Haskell
- Hemphill
- Jones
- Kent
- King
- Knox
- Lipscomb
- McCulloch
- Mitchell
- Motley
- Nolan
- Roberts
- Runnels
- Scurry
- Shackelford
- Stonewall
- Taylor
- Throckmorton
- Tom Green
- Wheeler
- Wichita
- Wilbarger

Western Edwards Plateau

- Crockett
- Edwards
- Irion
- Kimble
- Menard
- Reagan
- Real
- Schleicher
- Sterling
- Sutton
- Val Verde

Eastern Edwards Plateau

- Bandera
- Bexar
- Blanco
- Burnet
- Comal
- Gillespie
- Hays
- Kendall
- Kerr
- Llano
- Mason
- San Saba
- Travis
- Williamson

Cross Timbers and Prairies

- Bell
- Bosque
- Brown
- Comanche
- Cooke
- Coryell
- Denton
- Eastland
- Erath
- Hamilton
- Hood
- Jack
- Johnson
- Lampasas
- Mills
- Montague
- Palo Pinto
- Parker
- Somervell
- Stephens
- Tarrant
- Wise
- Young

South Texas Plains

- Atascosa
- Dimmit
- Duval
- Frio
- Jim Hogg
- Kinney
- LaSalle
- Live Oak
- Maverick
- McMullen
- Medina
- Starr
- Uvalde
- Webb
- Zapata
- Zavala

Blackland Prairie

- Collin
- Dallas
- Delta
- Ellis
- Falls
- Fannin
- Grayson
- Hill
- Hunt
- Kaufman
- Lamar
- Limestone
- McLennan
- Milam
- Navarro
- Rockwall

Post Oak Savannah

- Bastrop
- Bee
- Brazos
- Burleson
- Caldwell
- DeWitt
- Fayette
- Franklin
- Freestone
- Goliad
- Gonzales
- Grimes
- Guadalupe
- Henderson
- Hopkins
- Karnes
- Lavaca
- Lee
- Leon
- Madison
- Rains
- Red River
- Robertson
- Titus
- Van Zandt
- Washington
- Wilson

Pineywoods

- Anderson
- Angelina
- Bowie
- Camp
- Cass
- Cherokee
- Gregg
- Hardin
- Harrison
- Houston
- Jasper
- Liberty
- Marion
- Montgomery
- Morris
- Nacogdoches
- Newton
- Panola
- Polk
- Rusk
- Sabine
- San Augustine
- San Jacinto
- Shelby
- Smith
- Trinity
- Tyler
- Upshur
- Walker
- Wood

Upper Gulf Prairies and Marshes

- Austin
- Brazoria
- Calhoun
- Chambers
- Colorado
- Fort Bend
- Galveston
- Harris
- Jackson
- Jefferson
- Matagorda
- Orange
- Victoria
- Waller
- Wharton

Lower Gulf Prairies and Marshes

- Aransas
- Brooks
- Cameron
- Hidalgo
- Jim Wells
- Kenedy
- Kleberg
- Nueces
- Refugio
- San Patricio
- Willacy

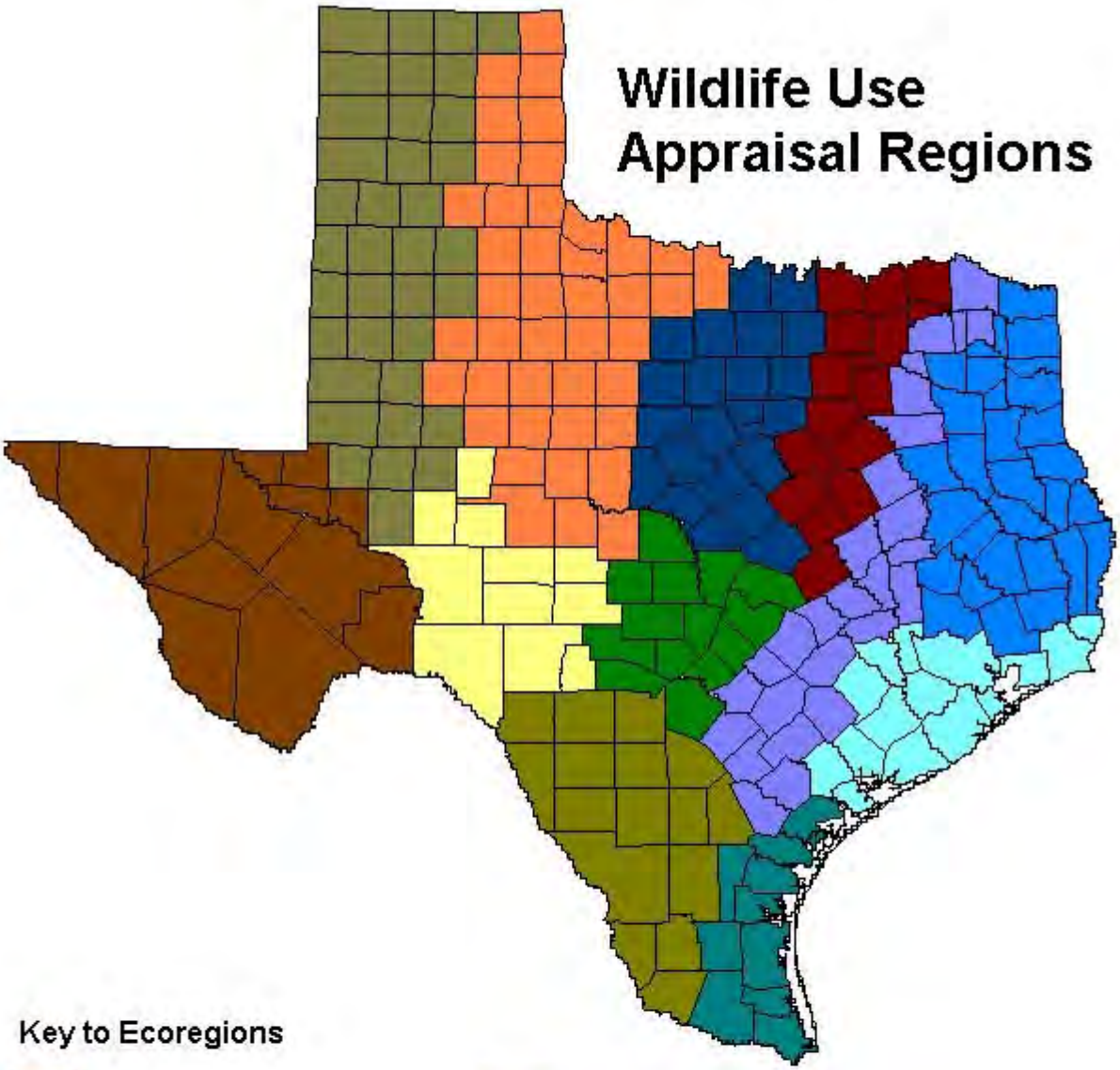

Key to Ecoregions

- Trans Pecos
- High Plains
- Rolling Plains
- Western Edwards Plateau
- Eastern Edwards Plateau
- Cross Timbers & Prairies
- South Texas Plains
- Blackland Prairie
- Post Oak Savannah
- Pineywoods
- Upper Gulf Prairies & Marshes
- Lower Gulf Prairies & Marshes

3. Changes to the Wildlife Management Plan (WMP) requirements are as follows:

- The Chief Appraiser may accept, but may not require, a WMP not completed on a TPWD form. All required information must be provided.
- An appraisal district may require an annual report.
- A Wildlife Management Property Association may file a single WMP or annual report, but all members must sign the WMP or annual report.
- Practices implemented in WMPs must not harm endangered species, but they are not required to benefit these species – the change mirrors requirements of the Endangered Species Act.

4. Changes to the Qualifications for Wildlife Management Use are as follows:

- The TPWD Comprehensive Wildlife Management Guidelines set the degree of intensity standard for wildlife management practices and activities implemented in the various ecological regions.
- The landowner selects which 3 of 7 wildlife management practices to implement each year.
- Property must now be "actively managed" to sustain a breeding, migrating, or wintering population of indigenous wildlife, where prior rule required that the land was "instrumental in supporting" this wildlife.
- Primary Use is the same as Principal Use and is defined as:
    - The property is actively managed according to a WMP.
    - Wildlife management practices and activities are given priority over other uses.
    - Secondary uses of the land do not significantly and demonstrably interfere with wildlife management practices and activities and are not detrimental to the wildlife being managed.

5. Changes to Wildlife Use Requirement are as follows:

- Use or minimum acreage requirements now apply only when the property has had a reduction in acreage – it no longer requires both a change in ownership and a reduction in acreage.
- The Chief Appraiser in each county, with the advice and consent of the Appraisal District Board of Directors, now selects the wildlife use requirement from the allowable range based on the appropriate appraisal region.
- Minimum acreage ranges are the same except for Terrell (increase), Clay (increase), McCulloch (increase) and Bee (decrease) counties. Changes result from the reorganization of appraisal regions.
- Existing properties in wildlife management are grandfathered and not affected by these changes.

Appendix C
Wildlife Management Plan Overview
Use this list to assist in planning your wildlife management activities.

TREATMENTS	Practice	Year 1	Year 2	Year 3	Year 4	Year 5
Habitat Control:						
HC: Wildlife & Habitat Management Plan						
HC: Grazing Management						
HC: Prescribed Burning						
HC: Range Enhancement (re-seeding)						
HC: Brush Management						
HC: Vegetation Surveys						
HC: Fence Modification						
HC: Riparian Management and Enhancement						
HC: Wetland Enhancement						
HC: Habitat Protection/Species of Concern						
HC: Prescribed Control of Species						
HC: Wildlife Restoration						
Erosion Control:						
EC: Pond Construction						
EC: Gully Shaping						
EC: Streamside, Pond, Wetland Revegetation						
EC: Native Plant Establishment on Erodible Areas						
EC: Dike/Levee Construction/Management						
EC: Establish Water Diversion						
Predator Control:						
PC: Predator Management						
PC: Control of Brown-headed Cowbirds						
PC: Grackle/Starling Control						
Supplemental Water:						
SW: Marsh/Wetland Restoration or Development						
SW: Well/Trough/Windmill Overflow						
SW: Spring Development and/or Enhancement						
Supplemental Food:						
SF: Grazing Management						
SF: Prescribed Burning						
SF: Range Enhancement (Re-seeding)						
SF: Fence Modification						
SF: Food Plots						
SF: Feeders and Mineral Supplementation						
SF: Managing Tame Pasture, Old Fields, Croplands						
Providing Shelters:						
PS: Nest Boxes, Bat Boxes						
PS: Brush Piles and Slash Retention						
PS: Fence Line Management						
PS: Cropland Management						
PS: Half-Cutting Trees or Shrubs						
PS: Woody Plant/Shrub Establishment						
PS: Natural Cavity/Snag Development						
Census:						
C: Spotlight Counts						
C: Aerial Counts						
C: Daylight Wildlife Counts						
C: Harvest Data Collection & Record Keeping						
C: Browse Utilization Surveys						
C: Endangered, Threatened or Protected Species						
C: Nongame Wildlife Species						
C: Time/area Counts						
C: Roost Counts						
C: Song Bird Transects and Counts						
C: Quail Call and Covey Counts						
C: Point Counts						

Appendix D

Livestock Management Recommendations

Because "weeds" (broadleafed herbaceous plants) compete with grasses for growing space, nutrients and moisture, their presence in rangeland plant communities is usually considered to be undesirable by most range managers, but they are important for wildlife. A well-planned livestock grazing system allows for greater plant diversity, including a good component of forbs.

A range that has not been grazed for a long period of time and is otherwise not periodically disturbed can become "stagnant." It will be dominated by relatively few species of plants and exhibit limited variety and diversity. Therefore, total long-term deferment from livestock grazing is not normally recommended for optimum range and wildlife habitat management. Several growing seasons of deferment may be needed to allow an abused range to recover, but grazing should again be implemented after sufficient recovery is made.

Livestock should be considered as "tools" that can be used to maintain good wildlife habitat. A well-planned livestock grazing system is one which allows adequate rest periods for plants to recover after grazing. Most domestic livestock are selective grazers and consume the most nutritious and palatable plants first. Whenever a plant is eaten, there is not only a reduction in top growth but also a reduction in root growth. This reduces the plant's ability to rapidly regrow following defoliation. During the growing season, herbaceous plants need at least 30 to 60 days of rest to recover from grazing. Woody plants need as long as 4 to 6 months of rest to allow for regrowth. The recovery periods depend upon the severity of defoliation, moisture conditions, and temperature.

During continuous year-long grazing when livestock are left in a pasture for 365 days of the year, the most palatable plants are repeatedly defoliated. Frequent, repeated use will not allow seed production or plant recovery. Continuous grazing, even at light to moderate stocking rates, will remove the most desirable and palatable plants while the least preferred/least palatable plants that receive less grazing pressure become more dominant because of a reduction in competition. The result is a change in the species composition and an overall reduction in plant species diversity. Continuous grazing should not be used as a grazing method if the land manager's desire is to improve habitat for wildlife.

Several livestock grazing methods and systems have been developed which provide adequate periods of rest and allow vegetative recovery. There are many variations of these systems and the land manager needs to select the one that fits his particular situation. Some commonly used deferred-rotation grazing systems are: three

_____, four pasture/one herd rotation, high intensity/low frequency (HILF), short duration, and four pasture/three herd rotation, or rest rotation. Regardless of the type of deferred-rotation grazing system used, the length of time that an individual pasture should be grazed and the length of time that it would need to be rested before being grazed again would be dependent upon: a) the size of the pasture, b) its grazing capacity, c) the time of year (growing season versus non-growing season), d) the amount of rainfall received since being grazed, and e) the class of livestock. Grazing schedules and livestock stocking rates for pastures within a grazing system need to be flexible and continually reevaluated based on rainfall patterns, seasons of the year, and local range conditions. Knowing how long to graze and how long to rest is more an art than a science, dependent more on environmental factors and the on-site conditions than on the calendar.

Below are brief descriptions of the different deferred-rotation grazing systems. There are many variations of each system and the land manager can modify the grazing schedules to fit the local situation.

Three pasture/one herd rotation - The one herd of livestock is rotated through the pastures every 3 months. This allows each pasture to receive 6 months of rest before being grazed again. Over time, the pastures are grazed during different seasons of the year, with a 3 year interval before an individual pasture is grazed during the same time period again. For example, a pasture grazed from April through June during the first cycle, would be grazed from January through March during the second cycle, October through December during the third cycle, and July through September during the fourth cycle, before being grazed again during the April through June period during the fifth cycle. (This system should preferably be a step in moving toward a 1 herd/multiple pasture {4+} grazing system that provides a minimum of 75% of the land being rested at any one time.)

Four pasture/one herd rotation - The one herd of livestock is rotated through the pastures every 2 months. Each pasture also receives 6 months of rest before being grazed again, but the interval before an individual pasture is grazed again during the same time period is reduced to 2 years. For example, a pasture grazed April and May during the first cycle, is grazed December and January during the second cycle, and August and September during the third cycle, before being grazed again April and May during the fourth cycle.

High intensity/low frequency (HILF) - The number of pastures in this system is variable, but typically requires a minimum of 6 to 8 pastures. The livestock are kept in one herd, and each pasture is grazed intensely by the entire herd for approximately 1 to 1 1/2 months (high intensity), followed by a long period of rest (low frequency). The following are the calculations for determining how long each pasture should be grazed under a HILF system, using a system with 7 pastures as an example:

1.) add 1 to the number of pastures in the system (1+7=8)

2.) divide the number of days in a year by the answer from step 1 to determine how many days each pasture should be grazed (365 days divided by 8 = 46 days of grazing per pasture).

It would take 322 days (7 pastures X 46 days each = 322 days) to complete the grazing cycle, and each pasture would receive 276 days of rest between grazing periods.

Short duration system - This system requires that a ranch be divided into numerous pastures, typically a minimum of 12 to 20. The livestock are kept in one herd and the herd is rotated rapidly through the pastures. Each pasture is grazed intensely for a short period of time (a few days), followed by several months of rest. The length of the grazing cycle needs to be based on the season of the year and the amount of rainfall received during the cycle. For example, a 90 day cycle could be used during the growing season when plants recover more rapidly after being grazed. Each pasture in a short duration system that has 15 pastures, for example, would be grazed for approximately 6 days each (90 days divided by 15 pastures = 6 days per pasture) during the spring and summer growing season. The grazing cycle would be completed in 90 days. Each pasture would receive 84 days of rest between grazing periods, which would hopefully be enough for sufficient plant recovery if adequate rain was received during the cycle. The cycle could be lengthened during the non-growing system when dormant warm-season plants can withstand heavier grazing pressure without damage. Each pasture in the 15 pasture system would be grazed for 10 days at a time under a 150 day cycle used during the winter, with 140 days of rest between grazing periods.

Four pasture/three herd rotation - The livestock are divided into 3 herds and stocked within 3 of the 4 pastures. One herd is moved to a vacant pasture every 4 months. This allows for an individual pasture to be grazed for 1 year and rested for 4 months. The four pasture/three herd system is the least preferred because of the long period of time that livestock remain in each pasture.

Rest-Rotation Grazing – One pasture in a multiple pasture system receives a year of rest on a rotational basis at least every third or fourth growing season. The system allows for year-long escape cover, nesting and foraging habitat, as well as seed-set.

A ranch must be divided into at least two pastures before even the least complex two pasture/one herd deferred-rotation grazing system can be implemented. If not cross-fenced, the land manager would need to have access to other areas where livestock could be moved to during the prescribed rest periods. Electric fencing is a lower cost/less labor intensive alternative to barbed wire for dividing a ranch into multiple pastures. For a deferred-rotation grazing system to be most effective, all the pastures in the system should be more or less equal in size and/or have similar grazing capacities (e.g., pastures on the most productive, deep soils of a ranch would have higher livestock grazing capacities and should therefore be smaller than pastures on shallower, less productive soils).

Individually fenced improved grass pastures on a ranch should be incorporated into a deferred-rotation grazing system. Rotating livestock through the tame grass pastures would help provide longer/more frequent periods of deferment for the native pastures since most species of non-native forages can generally withstand more intensive grazing pressure than native plants can. Note: most species of "improved" livestock forages (such as coastal bermudagrass, Klein grass, Old World bluestem, etc.) do not have much value to wildlife except possibly as cover for some species, especially if grown in dense monocultures with very little diversity of native plants.

Since livestock are confined to individual pastures in a deferred-rotation grazing system, each pasture needs to have at least one source of water available when livestock are in that pasture. Creeks may provide adequate water during most of the year, but water from seasonal streams may become limited or inaccessible during extended dry periods. Also, concentrated livestock activity around creek waterholes can cause excessive damage to the plants and soils in the area. Earthen stock tanks and/or water piped to troughs from a well may provide better, more reliable, sources of water. One water source can serve several pastures if properly located. For example, one water trough could serve two pastures if straddled by a cross-fence, or a trough in a separately fenced "waterlot" constructed at the juncture of several cross-fences could serve numerous pastures.

A deferred-rotation grazing system will fail to produce the desired results of maintaining a healthy and diverse plant community if the range is overstocked with animals, both domestic and wild. The appropriate livestock stocking rate for a specific ranch is dependent on that ranch's herbaceous plant productivity and past grazing history. The stocking rate can vary from year to year, and seasonally within a year, depending on environmental factors. Stocking rates should be calculated on grazeable land, excluding dense woods, brush, or water. The impact of grazing animals should be closely monitored and the number of livestock on a ranch may need to be frequently adjusted to account for the variations in a ranch's grazing capacity.

A rule-of-thumb livestock stocking rate for native rangelands in the eastern portions of the Cross Timbers and Prairies and Edwards Plateau regions of northcentral and central Texas is 1 animal unit (a.u.) per15-20 acres. Recommended stocking rates decrease in a westward progression across the regions in association with decreases in the average annual rainfall. A rule-of-thumb rate in central portions of the regions is 1 animal unit per 25-35 acres, while it is 1 animal unit per 40-50 acres in the most arid far west portion of the Edwards Plateau.

The combined total of all animals on the range, including all classes of livestock as well as deer and exotics, must be considered when determining stocking rates. The following equivalent values of animal unit standards can be used for planning the management of rangelands:

Cattle	
weaned calves to yearlings	0.6 animal unit

steers and heifers (1 to 2 years)	1.0 animal unit
mature cows, with or without unweaned calves at side	1.0 animal unit
bulls (2 years and over)	1.3 animal unit

Sheep

5 weaned lambs to yearlings	0.6 animal unit
5 mutton or ewes (1 to 2 years)	1.0 animal unit
5 mature ewes, with or without unweaned lambs at side	1.0 animal unit
5 rams	1.3 animal unit

Goats

6 weaned kids to yearlings	0.6 animal unit
6 muttons or does (1 to 2 years)	1.0 animal unit
6 does, with or without unweaned kids at side	1.0 animal unit
6 bucks or muttons over 2 years	1.3 animal unit

Horses 1-1.5 animal unit

Deer

6 deer	1.0 animal unit

Exotics (depends on the species; use animal unit standard set for similar size domestic animal)

A well-planned cattle grazing system is compatible with wildlife habitat management. Since cattle primarily consume grass, they do not normally compete with most wildlife for the same food sources unless forced to due to excessive stocking rates and/or continuous grazing pressure. However, goats and sheep more directly compete with wildlife. Goats prefer browse (the foliage of woody plants); sheep prefer forbs. The foliage and seeds of forbs and woody plants are important food sources for many species of wildlife. Excessive goat browsing also reduces the amount of low-growing woody brush needed for cover for many wildlife species and can limit the reproduction of woody plants. It is recommended that sheep or goats not be stocked on a ranch if maintaining and improving the habitat for wildlife is an objective, unless 4-6 months rest can be periodically provided in pastures to allow for the adequate recovery of woody plants.

It is recommended that when leasing grazing rights, there be a written livestock grazing lease agreement that as a minimum specifies a maximum stocking rate and that a rotational grazing system will be used. Grazing schedules (how long each pasture will be grazed and how long each will be rested) and stocking intensities need to be flexible and continually reevaluated based on rainfall patterns, seasons of the year, and local range conditions. The landowner needs to retain the rights to require the lessee to

reduce, and in some instances increase, the number of livestock depending on range conditions, and to require that range plants receive appropriate periods of rest. As a suggestion, it may be to the landowner's benefit to receive grazing lease "payment" in the form of facilities/habitat improvements (fence repair, additional cross-fence construction, cedar control, prescribed burning, discing to encourage forb growth, etc.) in lieu of monetary reimbursement. A good, trustworthy lessee can be an asset to a landowner, helping to maintain and improve the quality of the habitat as well as serving as the landowner's "eyes and ears" in his absence. Conversely, a lessee who is more concerned with maximum, short-term economic gains rather than the long-term sustained health of the land can be a liability.

Appendix E

Vegetation Management Recommendations

Managing native vegetation (woody plants, weeds, grasses) to prevent continuous overuse by livestock and wildlife should be of primary concern. Over 50 percent use of most species on a continuous basis will stress vegetation causing less production or death of the plant. Good livestock management, using a deferred-rotation grazing system at proper stocking rates, can prevent overutilization of vegetation by livestock. Sound deer and feral hog (and other large exotics, such as axis, sika, etc.) harvest strategies are also needed to prevent overuse of food and cover by wildlife. Native white-tailed deer and feral hogs (and large exotics if present) are the only wildlife species present in the Edwards Plateau/Cross Timbers and Prairies regions that can degrade or virtually destroy the habitat for not only themselves, but for the many smaller mammal and bird species that rely on the same vegetation for food and/or cover.

Managing or planning for the long term, considering wet years as well as drought years, and not carrying more livestock or deer than the land will support during poor as well as good years should be the overall goal.

Wildlife has a certain requirement for cover. Cover provides a sense of security from disturbance and protection from inclement weather and predators. The amount and kind of cover vary with the species. A stand of herbaceous plants may provide adequate cover for some bird species and small mammals, whereas other species require woody cover (trees and shrubs) in lieu of or in addition to herbaceous cover. The best cover for a large species such as white-tailed deer in the Edwards Plateau/Cross Timbers and Prairies regions is a pattern or mosaic of woody brush and trees interspersed within open areas at an approximate 2/1ratio of open area to woody cover. Clumps or strips of brush should be wide enough so that an observer cannot see through them from one side to the other during the winter months when deciduous species are bare of leaves. Cover strips should be as continuous as possible to provide travel lanes. Deer and other wildlife can be displaced by disturbance from an area without adequate escape cover. A habitat that provides several different types and arrays of cover benefits more species of wildlife than a habitat that has limited types, amounts, and distribution of cover.

Management of vegetation, whether it is deciduous post oak woodlands, Ashe juniper woodlands, mesquite woods, or open grasslands, requires long-term planning. Any vegetation manipulation practice will have an impact on resident wildlife species, either good or bad, depending on the type of treatment used, the degree of use, and location. Before implementing vegetation control techniques, determine what the long-term effects will be for each wildlife species that occurs in the area and minimize the negative impacts. Consider the location and size of sensitive wildlife habitats that provide important nesting or roosting sites, feeding areas, desirable wildlife food producing plants, cover, water, and space needs. Wildlife can be displaced by disturbance from an area without adequate escape or security cover. The amount and distribution of cover on adjacent lands need to be taken into consideration when assessing the cover

needs of wide-ranging wildlife species such as deer and turkey. A small ranch would need a larger amount of security cover on a percentage basis than would a larger ranch where the vastness of the area provides security.

The control of plant species such as Ashe juniper, eastern red cedar, mesquite, prickly pear, and oak species that invade a variety of rangeland sites is often warranted. When these species dominate an area, they diminish plant diversity and the quality of habitat for most wildlife species. Vegetation manipulation may be in the form of prescribed burning, mechanical, biological, or herbicide control of trees, brush, or weeds, and is important to create and maintain open rangelands for grassland dependent wildlife. Most of these practices will require the use of specialized equipment or machinery for plowing, discing, bulldozing, spraying, or other vegetation or soil manipulation procedures. The cost effectiveness of the different control measures must be considered prior to initiation of control measures.

Prescribed burning is an effective, low-cost habitat management tool that can be used to enhance plant diversity by stimulating the production of a variety of forb and grass species and to maintain woody plants at the low heights most beneficial to wildlife. Livestock as well as wildlife can benefit from a properly planned and conducted prescribed burn. However, there are legal constraints and liabilities in the use of fire. The land manager should be well-trained and knowledgeable on the proper use of fire before attempting a prescribed burn. Refer to Texas Agricultural Extension Service bulletin "Prescribed Range Burning in Texas" for details on the use of fire as a range management tool. It is often necessary for a pasture to receive a period of deferment from livestock grazing to allow for a build-up of enough fuel (herbaceous plant litter) to carry a fire.

The use of mechanical equipment to control woody plants will typically result in an initial growth of forbs and annual grasses and the resprouting of many woody species. Soil disturbance associated with mechanical controls releases the natural seed bank found in the soil, increasing the quantity, quality, and distribution of plants beneficial to wildlife. However, without periodic follow-up treatments of fire, herbicides, or additional mechanical manipulations, and/or without proper livestock grazing management, these sites will eventually again become dense stands of regrowth brush and trees. Mowing (shredding) areas of herbaceous plants and/or low density woody plants is another form of mechanical treatment. Mowing should be postponed until after the peak of the nesting/young-rearing period of local ground-nesting birds and mammals. One-third of open areas can be mowed per year, preferably in strips or mosaic types of patterns, to create "edge" and structural diversity.

Biological control is the use of heavy grazing pressure by livestock such as goats to control or suppress woody plants and sheep to control herbaceous weeds. Under certain management goals, biological control of woody plants and forbs can be a legitimate practice if done correctly. However, it is not normally a recommended wildlife habitat management practice. Long-term heavy grazing pressure by goats, which prefer woody browse but will also consume forbs, will eliminate all leaves from woody

plants up to a height of four feet. The creation of this "browse line" and the resulting park-like appearance of the woody plant community will have negative effects on the wildlife species that also depend on the low-growing foliage of woody plants for both forage and cover. Heavy grazing pressure by sheep, which prefer forbs, will reduce or eliminate forbs that are also beneficial to wildlife.

There are many specifically formulated herbicides on the market today that can selectively control unwanted vegetation to enhance wildlife habitat. Determining the proper product and application technique requires consultation with TCE, NRCS, or TPWD personnel. Always advise that wildlife is a goal for your projects of this type. If herbicides are improperly used, they can have a significant negative impact on many plant communities and may suppress or eliminate plants other than the target species. Selective application methods, rather than broad-scale applications, are recommended to avoid the elimination of plants that are important to wildlife.

Ashe Juniper (Cedar) Control

Cedar has invaded large areas of the Cross Timbers and Prairies and Edwards Plateau regions of central Texas and it dominates many rangesites with shallow limestone soils. The suppression of fire and long-term overgrazing by livestock has contributed to the spread and invasion of this evergreen woody species. If not controlled or managed, cedar will eventually form a closed canopy that prevents sunlight from reaching the ground, limiting the growth of grasses, forbs, and other woody plants. The massive shallow root system of cedar allows it to successfully compete with more desirable plants for available soil moisture. The foliage of cedar intercepts rainfall and prevents moisture from reaching the ground. Soil erosion is enhanced under cedar stands due to the limited amounts of herbaceous plants.

Cedar has minimal food value to both livestock and wildlife. Its foliage is not preferred by browsing species. Deer only utilize it to a small extent, typically during the late winter when the availability of other foods is low. The fruit (berries) that it sporadically produces are eaten by some bird species and occasionally by deer, but they are not normally important components of wildlife diets. Cedar is an important component of Golden-cheeked warbler (GCW) habitat, and any control should follow management guidelines in **Appendix K**. Regrowth cedar is almost never a component of GCW habitat.

The most common species of cedar in central Texas, Ashe juniper or blueberry cedar, does not resprout from roots, as do most other woody species, if all above-ground green material is removed or killed. Redberry juniper does occur in some areas, especially the more western portions of the region. Redberry juniper has the ability to resprout from roots and is therefore more difficult to control. A landowner should learn how to identify the species occurring on his land so the most appropriate control methods can be used.

Ashe juniper can be controlled with a variety of control methods including mechanical (dozing, chaining, grubbing), fire, herbicides, biological, and hand cutting. Selective, single-stem removal of cedar where it is growing in stands mixed with other desirable woody plants is preferred over broad-scale removal to prevent damage to the desirable species. When it is removed from these areas, care must be taken to avoid reducing the amount of cover in the stands below minimum levels needed for wildlife. Because of its evergreen growth form, cedar can add structural density to stands of deciduous woody plants during the winter months. Control efforts should be targeted toward “regrowth” cedar invading range sites.

Properly applied fire (prescribed burning) can be used to economically kill small blueberry cedars up to about 3 feet tall. Other control methods are necessary to initially remove larger cedars that are not affected by fire. Prescribed burns at 8 to 10 year intervals can be used to maintain control of cedar seedlings that are continuously being established throughout central Texas from undigested seeds that are widely dispersed by birds and other animals, but a 5 year burning rotation seems the optimum form of control to reduce hand cutting.

The biological control of cedar with goats is not recommended because excessive browsing on other more preferred species of woody plants will precede utilization of the cedar, resulting in the degradation of wildlife habitat. Control of cedar with certain specific herbicides can be effective on low densities of cedars less than three feet tall.

Cedar does have some value as wildlife escape and thermal cover, especially in areas where other forms of woody cover are lacking or in short supply. The amount of cover on open "prairie" habitats of central Texas may be less than needed to provide a minimum amount of security for wildlife. Although some species of wildlife may prefer and utilize open habitats, others are hesitant to venture very far from escape cover. While it may not be the most desirable, cedar is one of an apparently limited number of woody species that can grow on certain soil types of central Texas. It is recommended that small stands and strips of cedar be retained and encouraged at 200-300 intervals in habitats lacking sufficient woody cover. These blocks and strips of cedar can provide structural diversity, travel lanes and security cover that are beneficial to many species. The distribution and density of cedar can be controlled over time to prevent it from forming dense stands.

Mesquite Control

Mesquite, another woody invader infesting many range sites in central Texas may be necessary on some sites. Its growth form varies from a multi-stemmed shrub to an upright tree. Adaptable to a variety of soil types, mesquite can colonize and dominate open rangelands, old fields, and other areas where ground cover has been reduced and fire eliminated from the environment. Mesquite sprouts from buds along a compressed, buried section of the stem called the "crown". Control by grubbing, bulldozing, root plowing, and chaining of mature-size trees has proven successful under proper soil moisture conditions. Several approved herbicides are also available for control.

Shredding, on the other hand, or other practices that only remove top growth but do not involve removal of the crown is not recommended and may result in further sprouting. Any control planning should proceed with good common sense and a sense of aesthetics.

Mesquite seed pods are readily eaten by wildlife and livestock, resulting in the dispersal of undigested seeds across the landscape. Seeds may remain dormant for extended periods of time and germinate when the right conditions or soil disturbances occur. Young mesquites can quickly become established and grow rapidly, particularly when competition from other plants is reduced by heavy grazing pressure.

Like red cedar or Ashe juniper, mesquite does have some redeeming qualities. It provides seed pods that are a beneficial although sporadic food source, microclimates for cool season grasses and forbs that may be important to plant diversity, nitrogen fixing roots, and cover that is beneficial to many wildlife species.

Range enhancement involves range reseeding and native grass restoration. Establishing native herbaceous plants (grasses and forbs) that provide food and cover, benefits wildlife and provides erosion control benefits. Plant species selected and methods for establishment should be applicable to the county. Non-native species are generally not recommended, but if required for a specific purpose, non-native species should not exceed 25 percent of the seeding mix. Seeding mixtures providing maximum native plant diversity are recommended. Many herbaceous broadleaf plants (known as forbs - weeds and wildflowers) are beneficial to wildlife for forage and/or seed production. Encourage "weed and wildflower" species by selective application of chemical, biological (eg., grazing management) and/or mechanical means on native rangelands, Conservation Reserve Program lands, and tame grass pastures (eg., coastal bermuda). Natural Resource Conservation Service personnel in the area can provide detailed recommendations on range and native grass reseeding, designed to meet individual goals. Refer to Appendix K for native grass restoration guidelines.

Farming Practices: Delaying of shredding or mowing of hay or native grass pastures until after July 15 will usually avoid killing of young fawns or ground nesting birds by accident.

Use Integrated Pest Management to minimize pesticide applications (consult the Texas Department of Agriculture, Austin). If necessary, spot spraying is much preferred over broadcast spraying especially for broad-spectrum herbicides. Spray early in the spring while plants are still small, requiring less spray. Many "weeds" are important to wildlife.

To provide weed seeds (ragweed, croton, sunflower, partridge pea, trailing wild bean, etc.) that are the basis of quail, dove, and other seed-eating bird's fall and winter diets, shallow disk 10 - 20 foot wide strips in sandy soil around the edge of brush and woods after the first freeze. This practice will promote growth of these important forbs the following spring and summer.

Appendix F

Specific Management Recommendations for White-tailed Deer

Before entering into a discussion on the management of white-tailed deer, it should be noted that because of the large home range size of deer, adjacent lands are also included in the home ranges of many of the deer on a ranch less than 3,500 acres in size. Only those deer within the interior of a larger ranch may have home ranges located totally within the ranch, while those in a wide band around the ranch's perimeter likely move back and forth onto adjacent lands. The quality of a ranch's deer population will in large part be dependent on the habitat quality and deer population management strategies (i.e. hunting pressure and deer harvest) found on the adjacent lands. As much of central Texas is comprised of land tracts significantly less than 3,500 acres in size, it is important for landowners to work with neighboring adjacent landowners to achieve deer/wildlife management goals. Formation of landowner wildlife management co-ops or associations is a practical, workable solution. TPWD or TCE personnel can assist with formation of these WMA's.

General:

The key to producing a productive and healthy white-tailed deer population is dependent upon the quantity, quality, and variety of food plants produced by the habitat or range. Food availability can be improved by: (1) harvesting deer, including does, to maintain total deer numbers at or below the capacity of the habitat; (2) not stocking with exotic big game animals, or keeping their numbers at a low level, since exotics compete with white-tailed deer for browse, forbs, and mast; (3) stocking the range with a moderate number of domestic animals (preferably species that do not directly compete with deer) and utilizing some form of a deferred-rotation system of grazing, and; (4) controlling invading "noxious" woody vegetation, such as cedar, not needed for cover or food to reduce competition and increase the production of grasses for cattle and the production and availability of browse and forbs preferred by deer.

Understanding food habits of deer is fundamental to management. Studies have shown that deer prefer forbs (weeds and wildflowers) and browse (leaves and twigs from trees or shrubs). Grasses make up a very small portion of a deer's diet and they are utilized only when tender and green. Deer cannot digest mature grasses. Forbs are generally

high in protein and important to deer size, antler development, and fawn production. However the production, quality, and palatability of forbs is highly dependent on rainfall and the season of the year. Forbs will be absent or unpalatable at least during portions of a year, typically during late summer and late winter.

Browse is the stable component of deer diets and, unlike forbs, is available throughout the year and is relatively drought resistant. Although utilized by deer throughout the year, browse becomes most important during the winter and summer stress periods when forbs are absent or unpalatable. Key browse plants occurring in central Texas include honeysuckle, downy virburnum, Texas madrone, Texas (Spanish) oak, Texas kidneywood, littleleaf leadtree, Texas sophora, Wright pavonia, chinaberry, mulberry, Carolina buckthorn, true mountain mahogany, cockspur hawthorne, Oklahoma plum, sugar hackberry, cedar elm, and slippery elm, which are rated as "preferred" species. "Moderately preferred", but also good, species include skunkbush sumac, flameleaf sumac, evergreen sumac, poison ivy, possumhaw, fourwing saltbush, white shin oak, Lacey oak, blackjack oak, chinkapin oak, post oak, Roemer acacia, Texas redbud, saw greenbrier, common greenbrier, Carolina snailseed, Texas colubrina, escarpment blackcherry, woollybucket bumelia, netleaf hackberry, heartleaf ampelopsis, ivy treebine, sevenleaf creeper, Virginia creeper, and mountain grape. Many woody plants also produce mast (acorns, fruits, or beans) that is readily eaten by deer, but mast production is erratic and therefore it is not as reliable as a food source as the foliage. Important mast producers are the oaks (including live oak, which is a low quality browse species), and mesquite and Texas persimmon, both of which are low quality browse species.

Not all of the above species are found throughout all of central Texas. The woody species found in an area are dependent the ranch's geographic location and soil types. The quantity and species diversity of woody plants is typically greatest on the deeper soils of riparian areas along the stream courses and lowest on the shallow soils of the prairies.

Antler development (main beam length, antler spread, basal circumference, and number of points) is dependent upon three factors: nutrition (quantity and quality of food), age, and genetics.

N<u>utrition</u>: Nutrition can be optimized by the methods discussed above: controlling the numbers of deer and exotic ungulates, utilizing a rotational system of domestic livestock grazing with moderate stocking rates, and controlling noxious vegetation. Supplemental feeding and supplemental plantings, in conjunction with the above practices, can be used to help meet the nutritional needs of deer. Both practices will be discussed in more detail in a later section.

<u>Age</u>: Maximum antler development of buck deer is attained at 5 to 6 years of age. Allowing bucks to reach older ages through selective harvest will allow them to attain their potential antler growth.

Genetics: Spike antlered bucks are the result of inadequate nutrition, genetics, or a combination of these two factors. Research has shown that yearling (1 1/2 year old) bucks have the potential to normally produce 8 points as their first set of antlers if nutrition is adequate and they have the proper genetic background. Conversely, bucks may only produce spike antlers as yearlings if they have "spikes genes", even with adequate nutrition. Although the subsequent sets of antlers of yearling spikes generally will not be spikes, their antlers tend to be inferior to those of bucks that were forked antlered as yearlings. Consequently, the incidence of inferior antlered bucks in the population should be minimized by the combination of optimizing nutrition (habitat management) and including spike antlered bucks in the total deer harvest.

Stocking deer from another area into a deer population in an attempt to introduce new genes and improve quality is a controversial and much discussed subject. The genetic contribution of one individual buck is limited where it is introduced into a population where other bucks are already present and also breeding does. There is no research available that indicates that introducing several bucks improves quality. Unless the pedigrees of the deer (bucks as well as does) stocked are known, there is a good chance that undesirable, but not easily recognizable, characteristics are being introduced. Stocking deer is costly. Also, the animals may have difficulty adapting to their new environment and mortality can be unusually high. It is much better to work with the resident population and cull bucks with poor antler characteristics and retain bucks with desirable characteristics. There are numerous examples where the "native" deer in an area where the average antler quality has been historically low have produced outstanding antlers through a combination of good habitat management, population management, and supplemental feeding. Deer within these populations had the genetic potential for large antlers, but were unable to express their potential because of inadequate nutrition and/or they were harvested before reaching mature ages.

Cover Requirements:

The best cover for white-tailed deer is a pattern or mosaic of woody brush and trees interspersed within open areas at an approximate 2/1 ratio of open area to woody cover. Clumps or strips of brush should be wide enough so that an observer cannot see through them from one side to the other during the winter months when deciduous species are bare of leaves. Cover strips should be as continuous as possible to provide travel lanes.

Population Characteristics:

Maintaining the deer population density within the food supply is very important to prevent die-offs during extreme habitat conditions, such as during droughts. Maintaining deer numbers within the carrying capacity will improve fawn production and survival, increase body size and improve antler development, and prevent habitat deterioration from overuse. The rule-of-thumb winter carrying capacity for central Texas is 1 deer per 10-12 acres.

Overuse of preferred vegetation on rangeland that is overpopulated with deer and/or overstocked with domestic animals on a long term basis can kill individual plants and prevent woody plant seedlings from being established, leading to a decline in the carrying capacity.

The objective is to maintain deer numbers at a level where every deer in the population is receiving adequate nutrition without causing degradation in the quantity and quality of native range plants. Factors such as fawn production, body size, antler development, and degree of browse utilization are good indicators to monitor to evaluate if a range is stocked at, above, or below its carrying capacity. As with cattle, it is better to maintain the deer population just below carrying capacity of the range.

An unbalanced sex ratio favoring female deer results in a limited number of bucks available for harvest. Also, a surplus of does can contribute to a rapid increase in deer numbers with the potential for exceeding the carrying capacity of the range. The recommended sex ratio for a free-ranging deer herd in central Texas is 2 does per 1 buck.

The fawn production objective is .75 fawns per doe or better.

Method(s) Used to Determine Population Density and Composition:

The spotlight deer census technique is the primary method used to estimate population density (acres per deer). It can also be used to make an estimate of herd composition (buck/doe/fawn ratio). Refer to **Appendix L** for detailed information on conducting spotlight deer censuses.

Incidental daylight observations of deer should be used to improve herd composition estimates and for rating the quality of antlered deer. Daylight observations (totaling100 deer, if possible) should be recorded by sex, age (adult or fawn), and antler quality (number of points, spread, etc.). Daylight observations can be made by slowly driving pasture roads during early morning and late evening hours. On smaller tracts, or where driving is not practical, observations from deer stands during these same time periods (before the hunting season) can be used. Hunters can also record observations of deer during the opening weekend of hunting season to supplement herd composition estimates. Refer to **Appendix M** for detailed information on conducting incidental daylight observations.

The surveys should be conducted on an annual basis during the late summer and early fall (August 1-October 15), during the time of the year when bucks have identifiable antlers and fawns are old enough to be up and moving around yet still small enough to be recognized as fawns. Replicating the spotlight census 3 to 4 times during the annual census period will increase the sample size and improve the population estimates. A minimum of 100 daylight observations (or as many as practical) of deer should be recorded. Binoculars should be used to aid in identifying deer.

The aerial (helicopter) census technique is another deer census technique that can possibly be used in central Texas, but it is not well-suited for estimating deer density (number of deer) in areas with dense woody cover and/or a tall overstory of trees. The greatest values of an aerial census are the herd composition and buck antler quality estimates that can be made by observing a large sample size of deer in a short period of time. A total coverage aerial census could be used periodically, perhaps every 3-5 years, to verify and support density, herd composition, and antlered buck quality estimates derived from annual spotlight censuses and incidental observations.

Biologists with the Texas Parks and Wildlife Department can provide assistance to establish the census route(s), demonstrate the techniques, and help conduct the initial census. The landowner/manager will then be encouraged to conduct all subsequent censuses and provide the data to the Department biologist for assistance in analyzing it and making harvest recommendations.

Recommendations for Harvest or Other Use:

Harvest is the key method to manage a deer population. It is utilized to maintain deer numbers within the carrying capacity, or food supply produced by the range. Harvest also is used to obtain and maintain a desired adult sex ratio and a desired age structure of the population by adjusting both the buck and doe kill.

Bucks: The harvest rate of bucks will be dependent on the objectives of the land owner/manager. One of the concerns that the Texas Parks and Wildlife Department has about the deer herd in many areas of central Texas is the young age structure of the buck segment of the herd. Typically, 50% or more of the annual buck harvest is composed of 1 1/2 year old bucks, an indication of heavy hunting pressure. If one of the deer management objectives is to produce bucks with larger antlers, they must be allowed to reach older ages, which means that the harvest of young, immature bucks should be restricted. Restricting hunters to mature bucks only (in addition to spikes) is a good management strategy. Deer body characteristics, in addition to antler characteristics, should be used to determine the relative age of bucks "on-the-hoof". However, since many of the deer on a ranch will also roam onto neighboring lands, the benefits of not harvesting young bucks may be partially negated if these bucks are subject to being harvested on adjacent lands. For a deer population management program to be most successful in an area, most or all the land managers in the area must have similar deer harvest strategies.

Under a Quality Management strategy, buck harvest must be restricted to 20% or less of the estimated buck population. This limited harvest will result in low hunter success rates, but will permit a significant portion of the buck population to reach maturity (4 1/2 years old and older) and increase the proportion of bucks in the population. This strategy may only have limited success on smaller tracts of land (5,000 acres or less that are not high-fenced) where hunting pressure on surrounding lands is moderate to heavy.

Under a Quantity Management strategy, up to 50% of the estimated buck population can be harvested annually to provide maximum hunter success. This strategy will result in a relatively young, immature buck herd, with most of the bucks harvested being 1 1/2 to 2 1/2 years old.

Under an Optimum Management strategy, 30% to 33% of the estimated buck population is harvested annually to allow for a generally acceptable level of hunter success while restricting pressure on bucks that allows a portion of the buck population to reach older age classes.

The harvest of spike antlered bucks should be included in the buck harvest quota, not added to the quota, regardless of the management strategy used. Spikes may comprise from 20% to 50% of the total buck harvest quota. Harvesting spikes will remove poor quality bucks from the herd at an early age. Also, if spike antlered bucks comprise a portion of the buck harvest quota, hunting pressure will be reduced on the better quality bucks.

Does: The recommended doe harvest will depend upon the overall deer density, the estimated carrying capacity of the range, the observed sex ratio, and fawn production and survival.

Note: Specific harvest recommendations for both bucks and does should be made annually after deer censuses are completed.

Records Management:

Records should be kept to monitor the status of the deer herd and measure the success of management over time. As a minimum, record keeping should include:

1.) annual deer population data (census data)
2.) number of deer harvested annually
3.) biological data from deer harvested, to include:
a.) field dressed weight
b.) antler measurements: inside spread, number of points, main beam lengths, circumference of antler bases. The Boone and Crockett antler scoring system can be used to measure overall antler quality.
c.) age: the manager can age the deer at the time they are harvested or the lower jaws can be removed from deer and stored for later aging by a biologist until the manager is proficient at aging.
d.) presence or absence of lactation (milk production) of does (to supplement fawn production estimates).

Note: Weight, antler, and lactation data from a deer, without knowing the age of the deer, is of minimum value. Conversely, age without corresponding weight/antler/lactation data is of minimum value.

Supplemental Feeding / Food Plots:

Managing the habitat for proper nutrition should be the primary management goal. Supplemental feeding and/or planting of food plots are not a substitute for good habitat management. These practices should only be considered as "supplements" to the native habitat, not as "cure-alls" for low quality and/or poorly managed habitats.

Supplemental feeding in particular is not a recommended practice unless it is integrated with other deer population/habitat management practices. It may be beneficial if the herd is harvested adequately each year and the range is in good condition. However, most deer feeding programs which provide sufficient additional nutrients to be of value are expensive and take a long term commitment. The most popular feed used to supplement the diet of deer is corn, although it is one of the poorest types of deer feed available. Corn is low in protein (7-10%) and high in carbohydrates. It does not provide adequate protein levels needed for development of bone and muscle. Knowing these limitations, corn may be used 1) as an energy supplement (carbohydrates) during very cold periods of the winter, and 2) to "bait" and hold deer in an area. If supplemental feeding is integrated into the overall management, the preferred method is to use a 16% to 20% protein pelleted commercial feed, fed free-choice from feeders distributed at the rate of one feeder per 300-600 acres located adjacent to adequate escape cover. Feed areas would have to be fenced to exclude livestock. Refer to the Texas Parks and Wildlife bulletin "Supplemental Feeding" for details.

Planting food plots may be a more effective method to supplement well managed native habitats than feeding, but like feeding, its cost effectiveness needs to be taken into account, considering factors such as climate, soil type, slope and drainage, labor, material, and equipment costs, and fencing from domestic livestock. Like feeding corn, food plots are typically used to bait and hold deer in an area. To provide optimum nutritional benefits to deer, the Texas Agricultural Extension recommends that 1) food plots comprise between 2% to 5% of the total land acreage, 2) at least one-half the food plots be planted in cool season species (planted in early fall with forage available during winter stress periods) and at least one-half of the food plots be planted in warm season species (planted in spring with forage available during the summer stress period), and 3) the plots be between 1/2 to 5 acres in size, long and narrow, and well distributed over the entire area adjacent to escape cover. Food plots should be planted on the deepest soils available.

Cool season plantings (planted in October) are generally more successful than warm season plantings because rainfall is somewhat more dependable during the fall and winter and there is less competition from weeds. To provide a safe-guard against complete failure, it is recommended that a mixture of species be planted rather than planting a single species. A recommended cool season mixture is a combination of at least two of the following cereal grains: wheat, oats, and rye. All are annuals and will have to be replanted annually. Adding a cool season legume to the seed mixture, or planting separately, will increase the protein content. However, there are very few legumes that can be incorporated into supplemental plantings that are well adapted to

this region. Natural Resources Conservation Service (NRCS) recommended cool season legumes: vetch, Austrian winter peas, clover (Madrid, rose, Big Bee, burcane).

Although they are usually the most important, warm season supplemental plantings are generally less successful than cool season plantings. Typically, during drought conditions when native vegetation is in poor condition and supplemental plantings are most needed, there is not enough moisture for production of food plots. There is no one species that can be recommended for a warm season planting to supplement the diets of deer. NRCS recommended warm season annual species are: spanish peanuts, grain sorghum, cowpeas, common sunflower. Most species of "improved" livestock forage grasses are not highly preferred by deer.

An NRCS recommended seed mix for permanent food plots is: bush sunflower, Engelmann daisy, maximillian sunflower, and Illinois bundleflower. All are perennials and native to central Texas. Engelmann daisy is a cool season species, the rest are warm season. This would be a good seed mixture to use to "reclaim" improved grass pastures, i.e. convert them from a non-native species back to native species. This mixture could also be used on other deep soil sites.

Supplemental food plots should be fenced to control livestock grazing so that the maximum amount of production is available for wildlife. It may also be necessary to control deer access into planted areas until the plants are well established (the perennial mix species may need protection for a full growing season), unless sufficiently large areas are planted so deer grazing pressure can be distributed.

Refer to **Appendix N** for more information on food plots for white-tailed deer.

Appendix G

Specific Management Recommendations for Bobwhite Quail

Before entering into a discussion on bobwhite quail, it should be noted that the Edwards Plateau/lower Cross Timbers and Prairies regions of central Texas is not known as one of the better quail producing areas of the state. In relative terms, the overall habitat types occurring in the region are not as suitable for quail as those found in south Texas or north-central Texas. Also, quail population densities tend to vary greatly from year to year, even in the best quail producing regions of the state. The timing and amount of fall and winter rainfall are thought to be the most critical factors that determine quail breeding success and survivability during the next year (adequate amounts of fall/winter rains improve soil moisture and promotes the early growth of herbaceous plants).

Basic Habitat Requirements:

Bobwhite quail must have a year-round adequate supply of food and reasonable protection from hazards. This includes protection from predators while feeding, resting, loafing, roosting, traveling, and nesting, as well as protection from inclement weather conditions. Both food and cover supply must be stable or continuously renewed during the entire year. It is not enough that food and cover be adequate for 11 months if either is lacking during a single month.

Food and cover must occur in a well-arranged pattern if they are to comprise quail habitat. The distance between a source of ample food and adequate cover must not be greater than what a quail can negotiate with safety. As a rule of thumb, bobwhites venture no further than 200 yards from patches of cover. Ideally, escape cover should be linked to food supplies with more or less continuous screening cover. Overgrazed pastures do not provide adequate screening cover. However, the screening cover must not be dense enough to create an obstacle to the quail's short-legged gait. Dense stands of thick grass (tame pasture monocultures) cannot be easily negotiated. Without a suitable space relationship, a range will not be habitable for quail regardless of the quality or amount of food and cover present. In fact, ideal quail habitat consists of 30 - 60 percent bare ground interspersed with cover, forbs, and seed producing plants. This

permits ease of movement and location of seeds and insects, especially for newly hatched quail.

Food:

Food supplies are usually most abundant during the spring and summer; seeds are ripening and insects and green plant material are available. The food supply begins to diminish at the time of the first killing frost in the fall, and continues to decline throughout the winter due to competition from other animals and from weathering. Seeds from forbs such as croton (doveweed), ragweed, sunflower, partridge pea, and many others are staple winter foods. A number of woody plants provide winter quail food. Fruits and mast such as small acorns, sumac berries, hackberries, and gum elastic berries supplement quail diets. Most grasses, except for paspalums and panic grasses, do not produce seeds large enough to be worthwhile quail food. In general, forbs are the most important and most widely distributed sources of winter quail food. Green material from cool season forbs and grasses that germinate in the late winter if rainfall is adequate are essential to get quail in good body condition for the upcoming breeding season.

Cover:

Bobwhite quail need several types of cover: screening overhead cover for security while feeding and traveling, "tangled" woody cover to retreat into to escape enemies, a "living room" type of cover for dusting or resting, and nesting cover. Roosting cover is also needed, but if other types of cover are present, the roosting cover requirement is usually adequately met.

Cover can take many forms and a patch of cover can meet several of the cover requirements.

A stand of broomweed, or similar tall plants with bushy canopies and an open understory at ground level, can provide screening overhead cover.

Thickets of low brush, trees, and vines can provide escape and loafing cover. In general, a habitat with between 5% and 15% canopy coverage of good woody cover is adequate, if it occurs in small, well distributed patches (no more than 200 yards between patches as discussed above).

Patches of residual grasses left over from the previous growing season can provide nesting cover. Individual patches should be at least 8 inches tall and 12 inches in diameter (the size of a cake pan). Ideally, there should be more than 250 well distributed clumps of suitable nesting cover per acre, or 1 clump every 15 to 20 steps. Too little nesting cover makes it easier for predators to find and destroy nests.

Habitat Management Recommendations:

A primary quail management objective is to maintain or create the mosaic of small thickets of low growing woody brush throughout a ranch, as described above in woody cover requirements. Thickets of sumac, briers, plums, blackberries, etc. should be retained and encouraged to form. Although not as desirable, small clumps of low growing cedars could have some value as cover where other species do not grow or are in short supply. Where vines have grown up into a tree leaving ground too open to serve as quail cover, the tree can be cut half through a few feet above ground and pushed over, bringing the living vines closer to the ground. In the western portion of the area, the trunks of multi-stemmed mesquites can be half-cut and pushed over so that the limbs touch the ground but continue to grow, forming small areas protected from cattle grazing/deer browsing. Half-cutting mesquite should be done during the early and middle parts of the growing season, not during the dormant season. The individual "skeletons" of large cut cedars can also form small areas protected from grazing/browsing where patches of herbaceous and woody plants suitable for cover can become established. The number of browsing animals on the range (combination of wildlife and domestic livestock) needs to be maintained at a level where browsing pressure on low growing woody cover is not excessive.

Another objective is to improve the amount and quality of herbaceous cover. A well-planned deferred-rotation livestock grazing system (as described in the Livestock Recommendations section) can be used to create the patchy pattern of lightly grazed areas interspersed among more heavily grazed areas needed for nesting cover.

Most good seed producing forbs are early successional stage annuals that respond to soil disturbance that sets back plant succession. Discing the soil is a good practice that encourages the growth of forbs and other annual plants. Disced strips should be long and meandering and 1 or 2 disc widths wide. The same strips can be disced annually, or side-by-side strips can be disced on an alternating basis every other year to create adjacent strips in various stages of succession. The best plant response will occur in areas of deeper sandy, sandy-loam soils. It is important that disced strips be located near escape cover so they are useable by quail. Discing can be done anytime between the first killing frost in the fall and the last frost in the spring, but the optimum time is near the end of winter (January, February) shortly before spring growth gets underway.

Heavy spot grazing by cattle, such as occurs around salt blocks, feed areas, and water, causes soil disturbance that encourages forb growth. Salt blocks and feeding areas should be moved around the ranch to create small patches of disturbed ground.

Managing the habitat for the production of native food plants and cover should be the primary management goal. Supplemental feeding and/or the planting of food plots are not a substitute for good habitat management. These practices should only be considered as "supplements" to the native habitat, not as "cure-alls" for low quality and/or poorly managed habitats. Food plots and feeders alone will not increase the number of quail a range can support if the supplies of other required habitat elements such as cover are limited.

Small food plots of seed producing plants including but not limited to millets, sorghum alum, and sorghum planted on deeper soils near cover can provide supplemental food sources during periods of extreme weather conditions. A limiting factor of supplemental food plots is sometimes an insufficient amount of rainfall received in central Texas during the summer. During dry years when the production of native foods is limited and supplemental foods are most needed, supplemental plantings will also be failures. During good years when the production of native foods is adequate, supplemental plantings may do well, but are not as necessary. Also, these seeds do not normally last long into the fall and winter, due to normal fall rainfall. Another limiting factor is that most types of supplemental plantings will have to be protected from livestock grazing by fencing the plot or deferring the pasture.

Feeding can provide supplemental food during extreme weather conditions and help hold quail in an area. Broadcasting corn or sorghum by hand is one method of distributing supplemental feed. It can also be distributed from fixed feeders. An intensive feeding program would be one that provides 1 feeder per every 40 to 60 acres of quail habitat (feeders placed 440 to 540 yards apart in a grid pattern) so that every quail covey has access to several feeders. One feeder per 75 acres may be sufficient. As with all other types of food sources, feeders need to be located near escape and screening cover to be useable by quail. Some limitations of supplemental feeding are: they can be expensive and labor intensive, diseases and parasites can be spread at heavily used sites, predators learn to key on sites regularly used by quail, and, depending on the type of feeder used, they may have to be fenced from livestock.

Prescribed burning is a very effective, low-cost habitat management tool that can be used to enhance plant diversity by stimulating production of a variety of woody plants, forbs, and grasses. Burning can be used to remove rank stands of herbaceous vegetation and plant litter that hinder quail movements. Also, studies have shown that up to seven times more protein rich insects are present in burned areas compared to unburned areas.

In summary, food and all the different types of cover must be available year around and suitably arranged to have a good quail habitat. The number of quail a range can produce and support will be dependent on the habitat element that is most limited. In other words, if cover is the limiting factor, increasing the amount of food beyond that needed for the number of quail that can be supported by the cover will not increase the range's quail carrying capacity, and vice versa.

See TPWD brochure 7000-37, Bobwhite Quail in Texas, Habitat Needs & Management Suggestions by A.S. Jackson, C. Holt, and D. W. Lay.

Notes: The same types of cover and seed producing forbs and supplemental food plants utilized by quail are also utilized by many other species of birds and mammals.

Appendix H

Specific Management Recommendations for Rio Grande Wild Turkeys

Although turkeys are non-migratory resident species, they have large home ranges that change with the season of the year. Turkeys tend to be widely dispersed during the spring and summer nesting/brood-rearing period. Nesting and brood-rearing habitat is similar to that required for quail, but on a larger scale: scattered thickets of low growing brush, patchy residual herbaceous vegetation, a moderately grazed, diverse grass/forb plant community that produces seeds and insects.

After the breeding season, numerous smaller flocks that were widely dispersed during the summer tend to congregate into large winter flocks. The ranges of winter flocks are centered around riparian areas (the flood plains of large creeks and rivers) that have moderately dense stands of tall, full canopied trees. These winter flocks will disperse several miles from their riparian area roost sites on daily feeding forays. Turkeys are attracted to feeders and supplemental food plantings provided for deer and quail. The nearness of a ranch to a winter roost site(s), and the availability of a food source, would determine to what extent turkeys are present during the winter months.

Habitat management for the wild turkey concerns the availability of water, food, and cover. The distribution of these key components of the range is of major importance. Turkeys require water daily and can obtain water from foods or free water (ponds, creeks, rivers, etc.) Grassy or brushy nesting and brood-rearing cover is probably the most important cover requirement. Food availability of the native range can be increased by the following activities: (1) moderately stock the range with domestic animals. (2) utilize a deferred rotation system of grazing. (3) control total deer numbers by harvesting does and (4) prescribed burns can be utilized to retain openings and control regrowth cedar as well as increase production of forbs, grasses and fruit or mast producing browse plants. In summary, range management activities that increase the

diversity of grasses, forbs, shrubs, trees, and vines improves the habitat for the wild turkey. These same management practices are also beneficial to deer, quail, and many other wildlife species.

Preservation of roosting sites is a key factor to maintain a turkey population on a sustained basis. Turkey also need escape cover to travel to and from roosting sites. Mature trees utilized as roosting sites include pecan, cypress, sycamore, cottonwood, most large oaks, elm, hackberry, western soapberry, and large mesquite. Dense brush thickets or solid block clearing both furnish poor habitat for the turkey. Clearing programs that leave brush strips between cleared areas are advantageous. Avoid removing hardwood trees such as the various species of oaks, hackberry, elm, or large mesquite. If clearing is needed to improve the range, irregular shaped cleared strips that follow topography are best.

Supplemental plantings and feeding high protein pelleted feed, especially during the period January through March will help increase winter survival and will also increase the reproductive potential of the hens.

With regard to harvest, approximately 20% of the estimated turkey population can be harvested annually. Adjustments in the harvest can be made on an annual basis. These adjustments will depend upon the nesting success and range conditions.

For more information, refer to TPWD publication PWD RP W7100-263, Rio Grande Turkey Habitat Management, by George W. Litton and Fielding Harwell.

Appendix I

Comments Concerning Federally Listed Endangered Species

The golden-cheeked warbler and black-capped vireo are Federally listed endangered species that are found in some areas of the Edwards Plateau and Cross Timbers & Prairies ecological areas.

The following information and management guidelines are from the 130 page book "Endangered and Threatened Animals of Texas - Their Life History and Management", by Linda Campbell. Published by the Texas Parks and Wildlife Press, Austin, Texas in 1995. Distributed by the University of Texas Press, Austin, Texas, and revised in 2003 as an electronic book available on the TPWD website at www.tpwd.state.tx.us.

Golden-cheeked Warbler

Scientific Name: *Dendroica chrysoparia*
Federal Status: Endangered, 5/4/90 • State Status: Endangered

Description

The Golden-cheeked Warbler is a small, migratory songbird, 4.5 to 5 inches long, with a wingspan of about 8 inches. The male has a black back, throat, and cap; and yellow cheeks with a black stripe through the eye. Females are similar, but less colorful. The lower breast and belly of both sexes are white with black streaks on the flanks.

Habitat

Typical nesting habitat is found in tall, dense, mature stands of Ashe juniper (blueberry cedar) mixed with trees such as Texas (Spanish) oak, Lacey oak, shin (scalybark) oak, live oak, post oak, Texas ash, cedar elm, hackberry, bigtooth maple, sycamore, Arizona walnut, escarpment cherry, and pecan. This type of woodland generally grows in relatively moist areas such as steep-sided canyons, slopes, and adjacent uplands. A mix of juniper and deciduous trees on the slopes, along drainage bottoms, and in creeks and draws provide an ideal mix of vegetation for these birds. Warblers can also be found in drier, upland juniper-oak (i.e., Texas oak, live oak, post oak, blackjack oak) woodlands over flat topography. Not all mature juniper-mixed deciduous woodlands are used by Goldencheeked Warblers. Only habitat actually used by endangered or threatened animals is subject to protection by the Endangered Species Act (ESA). (Only habitat modifications that would result in harm to the Golden-cheeked Warbler would be considered a violation by private actions under the ESA.)

Warblers need a combination of mature Ashe juniper and hardwood trees in their nesting habitat. Mature juniper trees vary in age and growth form, depending on site factors. Generally, trees required for nesting habitat are at least 15 feet tall with a trunk diameter of about five inches at four feet above the ground. The essential element is that juniper trees have shredding bark, at least near the base of the tree. Although the composition of woody vegetation varies within suitable warbler habitat, Ashe juniper is often, but not always, the dominant species. One study showed that juniper comprises anywhere from 10-90% of total trees in occupied habitat at 27 sites scattered throughout the breeding range. Golden-cheeked Warblers have been found in patches of habitat smaller than 12 acres, although populations of warblers in larger tracts of woodland habitats will persist longer than populations in small tracts of land. With increasingly fragmented habitat, smaller patches may become more important to warblers, particularly those located near areas of occupied habitat.

In general, Golden-cheeked Warblers occur in areas with a moderate to high density of older trees, and dense foliage in the upper canopy. Higher warbler densities are associated with larger contiguous patches, greater average tree height, greater variability in tree heights, and greater density of deciduous trees.

Life History

The Golden-cheeked Warbler's entire nesting range is currently confined to habitat in 33 counties in central Texas. The birds are dependent on Ashe juniper (blueberry juniper or cedar) for fine bark strips used in nest construction. Although nests may be placed in various species of trees, such as juniper, Texas oak, live oak, and cedar elm, all nests contain strips of Ashe juniper bark woven together with spider webs. Warblers feed almost entirely on caterpillars, spiders, beetles, and other insects found in foliage. The birds are thought to take advantage of insect blooms associated with different plants as the growing season progresses. For example, broad-leaved trees and shrubs, especially oaks, are particularly important in providing habitat for insects during the first part of the nesting season. Later in the season, warblers are frequently seen foraging in Ashe juniper. Mesic (relatively moist) conditions, such as those found on wooded slopes, canyon bottoms, and along creeks and draws, are especially favorable for the production of insect foods.

Depending on the location and quality of habitat, Golden-cheeked Warblers forage and nest in areas of habitat ranging in size from five to 20 acres per pair. Within suitable nesting habitat, male Golden-cheeked Warblers occupy an area, called a territory, which is vigorously defended against all other male Golden-cheeked Warblers. Nesting territories range in size from three to ten acres, depending on habitat quality. Banding studies show that males often occupy the same territory in subsequent breeding seasons. Male warblers can often be located through their territorial song, described as a rather hurried, buzzy "tweah-tweah-twee-sy." Single, sharp "chipping" calls can frequently be heard as Golden-cheeks forage among the trees.

The female does most of the work of nest building and incubating the eggs. The cup-like nest is often neatly tucked into the fork of a vertical limb and camouflaged to blend with

the bark of the tree. Nests are constructed at an average height of 15 feet above ground, although they have been found as low as five feet and as high as 32 feet. The male stays close by, singing his distinctive song and defending his territory during incubation.

During April, a single clutch of three to four eggs is laid. Warblers usually nest only once per season, unless a nest is lost to accident or predation. The eggs hatch in 12 days, and both parents care for the young. After the young hatch, male singing declines, although they can still be heard into June. Nestlings fledge eight or nine days after hatching, but remain in the vicinity of the territory for at least four weeks while being cared for by both parents. Golden-cheeked Warblers migrate to their wintering grounds in the pine-oak woodlands of southern Mexico (Chiapas), Guatemala, Honduras, and Nicaragua from late June to mid August. They return to Texas in early to mid-March.

Threats and Reasons for Decline

The most serious problems facing the Golden-cheeked Warbler today, as in the recent past, are habitat loss and fragmentation. Since warblers have limited and specific habitat requirements, direct habitat loss has resulted in population reduction, although precise comparisons of historic and current populations are not available. Recently, serious losses in nesting habitat have occurred in counties such as Travis, Williamson, and Bexar, where rapid urban development has spread into oak-juniper woodlands associated with canyonlands. Flood control and other impoundments have also reduced habitat for the warbler by inundating the juniper-oak woodlands existing on canyon slopes and bottoms along springs, streams, and rivers. Construction of large reservoirs has also led to loss of warbler habitat due to development of lake-side communities. Historically, some warbler habitat was lost as a result of clearing juniper/oak woodlands for increased livestock production or improved livestock handling. Stands of large juniper trees were also cut for sale as fence posts and other timber products, especially before 1940.

Over-browsing by white-tailed deer, goats, and exotic ungulates is believed to contribute to habitat degradation by reducing the survival of seedling oaks and other deciduous trees, which are a vital component of warbler habitat. Also, many of the deeper and more fertile soils in much of the Hill Country are found in small floodplains along creeks or intermittent streams associated with hillside drainage. Many of these areas, some of them supporting a variety of deciduous trees, were cleared and converted to forage crops and pasture, often resulting in a decrease in the amount of warbler habitat. Habitat loss may be obscured by the increase in juniper on rangeland throughout central Texas. The invasion of juniper on upland sites is often the result of fire suppression, overgrazing, or a combination of both. These young juniper stands invading open rangelands generally lack the kinds and numbers of hardwood trees required by warblers. Warblers are usually not found in monocultures (pure stands) where juniper comprises over 90% of the composition throughout a large area. Poor grazing management practices and fire suppression result in a decline in the diversity and productivity of rangeland. The decline in range condition associated with improper management has led to increases in juniper throughout the Hill Country.

Brood parasitism by Brownheaded Cowbirds may threaten successful reproduction of Golden-cheeked Warblers, although the degree of impact of cowbird parasitism on warbler productivity is not fully understood. Cowbirds lay their eggs in other birds' nests, leaving the host bird to raise the cowbird young. Goldencheeked Warblers apparently will either abandon parasitized nests, or raise young cowbirds in addition to or in place of their own young. Warblers that abandon parasitized nests may renest later in the season. However, abandonment of first clutches, or raising cowbird young in addition to their own, decreases the total number and survivability of Golden-cheeked warbler young produced.

Habitat fragmentation reduces the quality and quantity of warbler habitat. In small woodland patches, the increased proportion of habitat edge to interior area may increase rates of brood parasitism and predation, so that the surviving populations cannot maintain themselves. Also, increased distances between patches may make recolonization of vacated habitat more difficult. In Texas, Mexico and Central America, habitat management and protection, responsible land stewardship, and incentives for landowners to maintain and develop habitat, are keys to the survival and recovery of the Golden-cheeked Warbler. The diverse mix of hardwoods and junipers in canyons, and on slopes and adjacent hilltops, provide ideal habitat for the warbler. Numerous beautiful and interesting native plants and animals are also found in these canyons.

Recovery Efforts

Research is underway to better understand the life history, habitat requirements, limiting factors, and land management practices affecting the Golden-cheeked Warbler. Population surveys during the breeding season are being conducted in known and potential habitat areas. Efforts to provide information and educational opportunities to landowners and the public regarding life history and habitat requirements of the warbler are also a vital part of the recovery effort. Major recovery efforts are being conducted on Department of Defense's Fort Hood and Camp Bullis, Travis County and the City of Austin's Balcones Canyonlands Preserve, the U.S. Fish and Wildlife Services' Balcones Canyonlands National Wildlife Refuge, and many properties owned and/or managed by the Nature Conservancy. Additionally, Environmental Defense through their Safe Harbor Agreement with the U.S. Fish and Wildlife Service is assisting many landowners to manage and/or create habitat for the benefit of the warbler. Voluntary cowbird trapping is being conducted by more than 400 landowners in counties throughout the range of the warbler. Recently, a consortium of researchers in governmental and nongovernmental agencies has proposed a multinational effort to better understand and coordinate approaches to managing and recovering the Goldencheeked Warbler. Additional research in Mexico and Central America is planned to gather information concerning life history and habitat requirements on the wintering range. Studies are needed to assess the potential for income generating activities, such as selective harvest of juniper, which may be compatible with habitat protection.

Where To See the Golden-cheeked Warbler

A number of state lands, including Colorado Bend State Park (SP), Dinosaur Valley SP, Garner SP, Guadalupe River SP, Honey Creek State Natural Area (SNA), Hill Country

SNA, Kerr Wildlife Management Area, Longhorn Cavern SP, Lost Maples SNA, Meridian SP, Pedernales Falls SP, and Possum Kingdom SP offer opportunities for people to see Golden-cheeked Warblers and their habitat. Other locations include the Balcones Canyonlands National Wildlife Refuge, Travis Audubon Sanctuary, Wild Basin Preserve, and Emma Long City Park in the Austin area; and Friedrich Wilderness Park near San Antonio. Once open to the public, Government Canyon State Natural Area, located northwest of San Antonio, will offer additional opportunities to see Golden-cheeked Warblers. Because the Golden-cheeked Warbler is an endangered species, birders and other observers should carefully follow certain viewing ethics. Recorded calls of the Goldencheeked Warbler or Screech Owl should not be used to attract birds and observers should be careful not to disturb or stress birds.

How You Can Help

You can help by providing encouragement and support for private landowners who are managing their land to protect natural diversity and endangered species habitat. Landowners are encouraged to learn the facts about the Golden-cheeked Warbler and its habitat needs, and to protect areas of habitat found on their property. The Golden-cheeked Warbler is a beautiful songbird, and is much sought after among people who enjoy birdwatching and nature study. Possibilities exist for landowners to take advantage of the growing demand for natural history tours and vacations. Landowners interested in more information concerning nature tourism opportunities should contact the Nature Tourism Coordinator, Texas Parks and Wildlife Department, Austin (512) 389-4396; Environmental Defense, Austin (512) 478-5161; or the Nature Conservancy, San Antonio (210) 224-8774. Finally, you can be involved in the conservation of Texas' nongame wildlife resources by supporting the Special Nongame and Endangered Species Conservation Fund. Special nongame stamps and decals are available at Texas Parks and Wildlife Department (TPWD) field offices, most state parks, and the License Branch of TPWD headquarters in Austin. Conservation organizations in Texas also welcome your participation and support.

For More Information Contact

Texas Parks and Wildlife Department
Wildlife Diversity Branch
4200 Smith School Road
Austin, Texas 78744
(512) 912-7011 or (800) 792-1112
or
U.S. Fish and Wildlife Service
Ecological Services Field Office
10711 Burnet Road, Suite 200
Austin, Texas 78758
(512) 490-0057

Management guidelines are available from the Texas Parks and Wildlife Department and U.S. Fish and Wildlife Service for landowners and managers wishing to maintain and improve habitat for the Goldencheeked Warbler.

References

Arnold, K.A., C.L. Coldren, and M.L. Fink. 1996. *The interactions between avian predators and golden-cheeked warblers in Travis County, Texas*. Research report 1983-2 for Texas Department of Transportation.

Coldren, C.L. 1998. *The effects of habitat fragmentation on the golden-cheeked warbler*. Ph.D. Dissertation, Texas A&M University, College Station, Texas.

Engels, T.M. 1995. *Conservation biology of the golden-cheeked warbler*. Ph.D. Dissertation, University of Texas, Austin, Texas

Fink, M.L. 1996. *Factors contributing to nest predation within habitat of the golden-cheeked warbler, Travis County, Texas*. M.S. Thesis, Texas A&M University, College Station, Texas.

Huss, D.L. 1954. *Factors inf luencing plant succession following fire in ashe juniper woodland types in Real County, Texas.* MS Thesis, Texas A&M University, College Station, Texas. 77pp.

Ladd, C. and L. Gass. 1999. "Golden-cheeked warbler (*Dendroica chrysoparia*)." In The Birds of North America, No. 420. (A. Poole and F. Gill, eds.). The Birds of North America, Inc., Philadelphia, PA.

Mass, D.S. and G.D. Schnell. 1998. "Effects of habitat fragmentation on demographics of golden-cheeked warblers (*Dendroica chrysoparia*)." Masters Thesis, Part 1 of 2, University of Oklahoma, Norman, Oklahoma.

Oberholser, H.C. 1974. *The bird life of Texas*. University of Texas Press, Austin, Texas.

Pulich, W. 1976. *The golden-cheeked warbler, a bioecological study*. Texas Parks and Wildlife Department, Austin, Texas. 172pp.

U.S. Fish and Wildlife Service (USFWS). 1992. *Golden-cheeked warbler recovery plan*. USFWS, Endangered Species Office, Albuquerque, NM. 88pp.

U.S. Fish and Wildlife Service (USFWS). 1996. *Golden-cheeked warbler population and habitat viability assessment report.* Compiled and edited by Carol Beardmore, Jeff Hatfield, and Jim Lewis in conjunction with workshop participants.

Report of an August 21-24, 1995 workshop arranged by the U.S. Fish and Wildlife Service in partial fulfillment of U.S. National Biological Service Grant No. 80333-1423. Austin, Texas. xii+48pp.+Appendix.

Wahl, R., D.D. Diamond, and D. Shaw. 1990. *The golden-cheeked warbler: a status review*. U.S. Fish and Wildlife Service, Ecological Services Office, Austin, Texas.

Management Guidelines for the Golden-cheeked Warbler in Rural Landscapes

The descriptions presented in this document are intended to help landowners determine if they have Golden-cheeked Warbler habitat on their property. Not all sites within the habitat types described will be used by Golden-cheeked Warblers. It is only where individuals of this species occupy the identified habitat types during the breeding season that special management considerations such as those provided in these guidelines need to be considered. Private landowners have a tremendous opportunity to conserve and manage the fish and wildlife resources of Texas.

The objective of these guidelines is to provide landowners with recommendations about how typically-used agricultural land management practices could be conducted so that it would be unlikely that Golden-cheeked Warblers would be adversely impacted. The guidelines will be updated periodically to make them more practical and useful to rural landowners. The guidelines are based on the best available information and current understanding about the biology of the warbler, but may be refined as more complete biological data are collected. TPWD biologists have prepared these guidelines in consultation with USFWS biologists to assure landowners who carry out agricultural land management practices within the guidelines that they would know, with the greatest certainty possible, that they would not be in violation of the Endangered Species Act.

This document also provides information on land management practices that are appropriate for protection and/or enhancement of habitat. The categories were chosen to represent commonly encountered vegetation types and to address common questions regarding the effect of management practices on Golden-cheeked Warblers. In addition, suggestions are offered that promote conservation of soil, water, plant, and wildlife resources.

Habitat Descriptions

Habitat Types Where Warblers Are Expected To Occur (Protection efforts should be focused in these habitat types)

Woodlands with mature Ashe juniper (cedar) in a natural mix with oaks, elms, and other hardwoods, in relatively moist (mesic) areas such as steep canyons and slopes, and adjacent uplands are considered habitat types that are highly likely to be used by warblers. Mature Ashe junipers are trees that are at least 15 feet in height with a trunk diameter of about five inches at four feet above the ground (dbh). These areas generally will have a nearly continuous canopy cover of trees with 50-100% canopy closure and an overall woodland canopy height of 20 feet or more. This habitat type is also important for deer, turkey, other songbirds, and a variety of other wildlife due to the diversity of vegetation and topography and, in many cases, proximity to water. Woodlands of this description should be retained wherever they occur, especially along creeks and draws, and on steep slopes and generally rough terrain. Landowners with woodlands that fit the above description should assume that warblers may be using the area and are advised to follow the management guidelines presented here. Additional information regarding habitat types and their potential to support Golden-cheeked Warblers is presented in Table 1.

Habitat Types That May Be Used By Warblers

It is relatively easy to recognize the above described high quality habitat types where Golden-cheeked Warblers are likely to occur. However, there are a number of other vegetation types that may also be used by warblers, depending on the location, size of tract, land use, adjacent landscape features, and vegetation structure. These habitat types are most often used by warblers when they are located adjacent to or near areas of high quality habitat.

The four habitat types discussed below can be associated with a variety of tree canopy covers, ranging from 35-100%. Also, all four habitat types can contain mature Ashe juniper. Although not representative of what is typically thought of as the “best” warbler habitat, these areas may support Golden-cheeked Warblers, especially fledglings (young birds that have left the nest). These habitats may be relatively more important to warblers nesting in the western and northern portions of the species’ breeding range, or in areas where optimal habitat no longer exists. Although these habitat types may occupy a large geographic area within the Hill Country, little is known about warbler occupancy when the sites are not close to the optimal habitat types. Landowners are advised to treat the following vegetation types as occupied habitat until technical assistance is obtained or a survey done to determine whether or not specific areas support warblers:

1. Stands of mature Ashe juniper (trees with shredding bark), over 15 feet in height and dbh of about 5 inches, with scattered live oaks (at least 10% total canopy cover), where the total canopy cover of trees exceeds 35% and overall woodland canopy height is at least 20 feet.
2. Bottomlands along creeks and drainages which support at least a 35% canopy of deciduous trees (average canopy height of 20 feet), with mature Ashe juniper (at least 15 feet and 5 inches dbh) growing either in the bottom or on nearby slopes.
3. Mixed stands of post oak and/or blackjack oak (10-30% canopy cover), with scattered mature Ashe juniper (15 feet in height and 5 inches dbh), where the total canopy cover of trees exceeds 35% and overall woodland canopy height is 20 feet.
4. Mixed stands of shin (scalybark) oak (10-30% canopy cover) with scattered mature Ashe juniper (15 feet in height and 5 inches dbh), where the total canopy cover of trees exceeds 35% and overall woodland canopy height is 20 feet. (See Table 1).

Areas Where Warblers Are Not Expected To Occur

The following types of areas are not typical warbler habitat and are unlikely to be used by warblers unless adjacent to warbler habitat areas. This is important because areas consisting of non-typical warbler habitat that are adjacent to occupied habitat may in fact be used for foraging. This is especially true for sparsely wooded grassland or low impact agriculture, but much less so for industrial, commercial, and medium to high density residential areas (Coldren 1998). Further, although junipers occur abundantly over much of the Hill Country, a relatively small portion of them are actually a part of usable warbler habitat.

1. Stands of small Ashe juniper, averaging less than 15 feet in height and 5 inches dbh, are not habitat. This includes small juniper that invades open rangelands, previously cleared areas, or old fields. These areas are often dry and relatively flat, and lack oaks and other broad-leaved trees and shrubs. Generally, areas such as those described above that have been cleared within the last 20 years are not considered habitat.
2. Pure stands of larger (greater than 15 feet in height and 5 inches dbh) Ashe juniper, with few or no oaks or other hardwoods.

3. Open park-like woodlands or savannahs (even with old junipers) where canopy cover of trees is less than 35%. These areas often have scattered live oaks and other trees.
4. Small junipers and other trees coming up along existing fence lines.
5. Small junipers (less than 15 feet tall) coming up under larger hardwoods where junipers have been removed in the past 20 years.

Table 1. Ecological site types and Range Sites with plant communities that may provide habitat for Golden-cheeked Warblers. On flat or rolling uplands, warblers are most likely to occupy larger patches of woodlands adjacent to canyon systems. Most of the flat and rolling uplands within these Range Sites have other plant communities, like open savannahs, that do not support warblers. Sites that are not used by warblers are described in the Habitat Descriptions section of this leaflet.

Site Description	Range Site	Typical Plant Communities that may support Golden-cheeked Warblers	Potential for Golden-cheeked Warblers
Slopes and canyons, and associated creek bottoms	Adobe Clay Loam 1 Loamy Bottomland1 Steep Adobe Steep Rocky	Continuous canopy woodland* of Ashe Juniper, Texas Oak, Live Oak, Lacey Oak, Chinkapin Oak, Cedar Elm, Escarpment Blackcherry, Texas Ash, Bigtooth Maple, Redbud, Hackberry, Pecan, and other deciduous trees	Highly likely to be used
Flat or rolling uplands with shallow, rocky soils of variable depth	Adobe Low Stony Hill Shallow Very Shallow	Continuous canopy woodland* of Live Oak, Blackjack Oak, Post Oak, Shin Oak, Lacey Oak, Texas Oak, Cedar Elm, Hackberry, Texas Madrone, and Ashe Juniper Patchy woodlands + or interspersed mottes of mature Live Oak, Blackjack Oak, Post Oak, and Ashe Juniper	Highly likely to be used May be used
Flat or rolling uplands with reddish soils	Deep Redland2 Gravelly Redland2 Redland2	Continuous canopy woodland* of Live Oak, Blackjack Oak, Post Oak, Shin Oak, Lacey Oak, Texas Oak, Cedar Elm, Hackberry, Texas Madrone, and Ashe Juniper Patchy woodlands+ or interspersed mottes of mature Live Oak, Blackjack Oak, Post Oak, and Ashe Juniper	Highly likely to be used May be used
Flat or rolling uplands with shallow but more continuous rocky soils over limestone 3	Low Stony Hill	Continuous canopy woodland* of Ashe Juniper, Live Oak, and Shin Oak Patchy woodlands+ or interspersed mottes of mature Live Oak, Ashe Juniper, Hackberry, Cedar Elm, and Mesquite	May be used May be used

* Defined as 50-100% canopy cover of trees at least 15 feet in height or greater.

\+ Defined as 35-50% canopy cover of trees at least 15 feet in height or greater.

1 Stream bottoms in and near canyon systems.
2 Golden-cheeked Warblers may occur on Redland Range Sites adjacent to slope and canyon habitat. It is not known whether or not warblers occur on Redland Sites isolated from canyon systems.
3 Common woody plants include Hackberry, Texas Persimmon, Texas Ash, Live Oak, Texas Oak, Ashe Juniper, Evergreen Sumac, Cedar Elm, and Mesquite

Controlling juniper on these areas by prescribed burning, hand cutting, or well-planned mechanical methods is often desirable to improve range condition and plant diversity, and is compatible with protection and conservation of adjacent Golden-cheeked Warbler habitat. Maintaining a minimum 300 feet wide buffer of woodland vegetation adjacent to and around Golden-cheeked Warbler habitat is beneficial to minimize predation. This recommendation stems for studies which suggest that avian predation is greatest within 300 feet of the edge of an occupied habitat patch than farther inward (Arnold et al. 1996). However, when brush management and maintenance activities near habitat are necessary, they should not occur during the March-August nesting season to avoid adverse impacts such as disturbance of nesting and feeding birds. Since brush management activities can affect habitat for the Black-capped Vireo as well as the Golden-cheeked Warbler, landowners are encouraged to learn about the habitat requirements of both endangered songbirds (see TPWD leaflet on the Black-capped Vireo).

It is important in wildlife management in general, and in endangered species management in particular, to consider the “big picture” with regard to how land types relate to one another. For example, when brush management practices are planned in non-habitat areas, one should consider the proximity of the area to habitat used by warblers. These guidelines encourage landowners to keep natural, mature woodland sites wooded while allowing for the restoration of former savannah and grassland habitats that have been invaded by small juniper (or other invasives).

Agricultural Practices in Golden-cheeked Warbler Habitat

Disruption of the tree canopy should be avoided when planning ranch improvements or maintenance work in Golden-cheeked Warbler habitat. It is recommended that new fence lines and livestock watering facilities (pipelines, storage tanks, ponds, and troughs) be planned to avoid areas of habitat whenever possible. However, narrow linear openings, such as those needed for traditional agricultural management (fence lines, ranch roads, and livestock water pipelines) will not harm Golden-cheeked Warblers if openings (spaces between trunks or stems at breast height) are no greater than 16 feet in width. This width is large enough to allow for maintenance, while permitting the hardwood tree canopy to grow over the gap. Permanent electric fencing may enable landowners to cross fence areas of rough terrain with little or no disturbance to the tree canopy. Often, these power fences are the most cost effective way to cross fence areas of steep topography and shallow soils. Fencing and other ranch improvement work in Golden-cheeked Warbler habitat should only be done during the nonnesting period (September-February).

Dozing or hand cutting in habitat with closed tree canopy and steep slopes not only destroys warbler habitat, but mechanical disturbance also can create serious soil erosion problems. In addition, clearing these areas is generally not cost effective due to higher clearing costs; lower forage production potential, and grazing distribution problems associated with steep slopes. Selective removal of small juniper less than 15 feet in height and 5 inches dbh within habitat is not a problem as long as the tree

canopy is not disturbed. Any selective removal of juniper within or adjacent to habitat should be done during the non-nesting period (September-February).

When mature juniper trees are abundant in the habitat, incidental removal of juniper for use as fence posts on the ranch will have little impact on warbler habitat. The number of trees cut depends on the density of Ashe juniper in the habitat. For example, more trees could be removed from an area with a high density of juniper compared with the density of hardwoods. The idea should always be to provide a mix of juniper and hardwoods. When posting is done, trees should be selected to avoid disturbance to the tree canopy. One way to do this is to select trees with a relatively small individual canopy and scatter your tree selections over the area. Posting should not occur in habitat during the nesting period (March-August).

In habitat areas and on rangelands immediately adjacent to habitat, it is important to manage grazing pressure by deer and livestock to prevent over browsing of broad-leaved shrubs and trees, and to maintain plant diversity and productivity. Controlling the number of browsing animals (deer, exotic animals, and livestock) is important to maintain hardwood seedlings and ensure eventual replacement of deciduous trees in the canopy.

Range condition improvement in and adjacent to habitat areas, through proper grazing management and planned deferment, will likely prove beneficial to livestock and wildlife, including the Golden-cheeked Warbler.

Landowners with questions regarding how ranch improvements and management practices will affect habitat are advised to seek technical assistance from the Texas Parks and Wildlife Department, USDA Natural Resources Conservation Service, or U.S. Fish and Wildlife Service. For activities other than those described above, land managers should seek assistance from the U.S. Fish and Wildlife Service, since permits may be needed.

Other Management Suggestions

Reducing Impacts from Predation and Cowbird Parasitism

Reducing the impacts of predation and brood parasitism by Brown-headed Cowbirds may be important for successful reproduction in some populations of Golden-cheeked Warblers. This is particularly true where warblers nest near grazed land or grain crops

Planned grazing systems designed to rotate livestock away from known nesting areas during the breeding season (March-August) may be desirable to reduce cowbird impacts. Periodic rest also has important benefits for improving range condition and productivity. Since cowbirds are attracted to easily available food sources, spilling or scattering grain should be avoided. Supplemental feeding areas for livestock should be moved frequently, located away from nesting habitat, and kept free from accumulations of waste grain.

Maintaining woodland vegetation adjacent to Golden-cheeked Warbler habitat is often desirable to reduce predation and brood parasitism by Brown-headed Cowbirds. Woodland strips of 300 feet or more are preferable. These strips should be composed of both the physical structure (height and canopy cover) and species composition similar to warbler habitat (Arnold, et. al. 1996).

Finally, controlling cowbirds through trapping is effective in reducing warbler brood parasitism. Mounted mobile traps, placed near watering sites as livestock are rotated through pastures, have been used successfully to reduce cowbird numbers.

Properly placed stationary traps have also proven effective in reducing cowbird numbers and parasitism in a local area. Other methods, such as shooting, can be used to supplement trapping efforts where needed. Persons trapping cowbirds need to be certified for the handling of non-target birds under the general trapping permit held by TPWD. Preventing mortality of non-target birds is of paramount concern, so traps must be carefully monitored and checked frequently.

Contact Texas Parks and Wildlife Department for information and assistance in implementing a cowbird control program.

Habitat Restoration

The following suggestions are offered for landowners wishing to restore or create habitat for the Golden-cheeked Warbler in areas that currently do not support warblers. One type of restorable habitat is the relatively mesic (moist) area, with a diversity of deciduous trees, where junipers have been previously removed. Allowing the reestablishment of juniper on these sites would eventually result in the mature oak-juniper woodland preferred by Golden-cheeked Warblers.

Other situations where restoring habitat may be a possibility include relatively mesic areas dominated by juniper, where heavy browsing pressure by deer or livestock has prevented the establishment of hardwood seedlings. In these areas, control of deer numbers and planned deferment from livestock grazing would help promote reestablishment of broad-leaved shrubs and trees, eventually resulting in mature juniper-oak woodland.

In mesic areas where small junipers (15 ft. or less) are dominant, small junipers could be thinned to favor faster growth of remaining trees. Thinning would encourage hardwood regeneration, especially if some slash is left in place to provide protection for hardwood seedlings. If large junipers are dominant, several small openings per acre would encourage hardwood regeneration. These openings should be protected from browsing and left to regenerate naturally, or planted to native hardwoods.

In each of these examples, the idea is to restore areas that may once have provided habitat to the natural oak-juniper woodland capable of growing on the site.

Further Guidance Concerning the ESA

Good range management practices such as proper stocking, rotational grazing, prescribed burning, periodic deferments, carefully planned brush control, and attention to plant and animal resource needs will help prevent loss of Golden-cheeked Warbler habitat. Habitat where Goldencheeked Warblers are likely to occur should be protected from activities that alter the composition or structure of trees and shrubs, except as provided for in these guidelines.

Likewise, management activities in areas that may be used by warblers should be carefully planned to avoid altering vegetation composition and structure and timed to avoid the breeding season until a survey is done to determine if warblers are using the area. Important habitat components such as the ratio of mature juniper to deciduous trees, and canopy structure and height, should be retained whenever possible to enable population recovery.

Landowners who are not sure whether or not they have suitable Golden-cheeked Warbler habitat, or whether a planned activity will affect these birds, may want to consult a biologist familiar with the species.

An on-site visit by a biologist familiar with the warbler can determine if warbler habitat is present and whether the planned activity falls under the guidelines presented here. Also, a biologist who has a scientific
permit from the U.S. Fish and Wildlife Service and Texas Parks and Wildlife Department to do Goldencheeked Warbler survey work will know how to conduct a breeding season survey to determine if warblers are present in the area for which a management activity is planned.

Technical Assistance

Technical assistance in range and wildlife management, including management for endangered species, is available to landowners and managers by contacting the Texas Parks and Wildlife Department, USDA Natural Resources Conservation Service, Texas Cooperative Extension, or U.S. Fish and Wildlife Service. Further guidance and specific questions concerning Golden-cheeked Warbler research, endangered species management and recovery, and landowner responsibilities under the Endangered Species Act, should be directed to the Texas Parks and Wildlife Department or U.S. Fish and Wildlife Service.

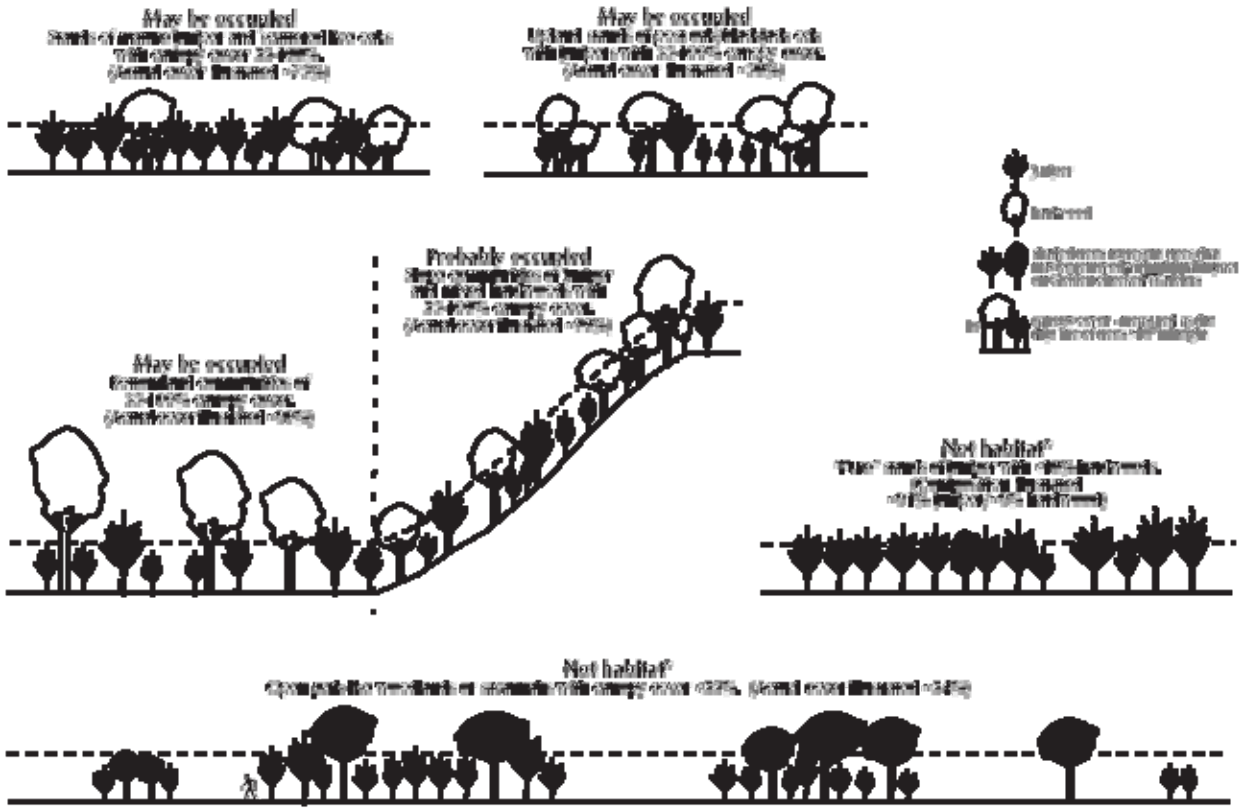

*As long as these areas are not in close (within 300 feet) proximity to "probably occupied" or "may be occupied" habitat, neither surveys nor permits are required for activities within these areas.

Black-capped Vireo

Scientific Name: *Vireo atricapillus*
Federal Status: Endangered, 10/6/87•
State Status: Endangered

Description

The Black-capped Vireo is a 4.5 inch insect-eating songbird. Mature males are olive green above and white below with faint greenish-yellow flanks. The crown and back of the head is black with a partial white eyering. The iris is brownish-red and the bill black. The plumage on the back of the female is duller than the male. Females have a medium to dark gray head with a blackish ring around the white surrounding the eye (this generally distinguishes the female from the second year male).

Distribution and Habitat

Historical records from 1852-1956 show that the Black-capped Vireo once occurred and nested from central Kansas, Oklahoma, Texas and into northern Mexico. Today, Blackcapped Vireos are known to nest in central and southwest Texas, a few counties in central Oklahoma, and in Coahuila and Nuevo Leon, Mexico, although less is known of their status in Mexico. Black-capped Vireos winter along the western coast of Mexico.

The descriptions of habitat presented in this document are intended to help landowners determine if they have Black-capped Vireo habitat on their property. Not all sites within the habitat types described will be used by Black-capped Vireos. It is only where individuals of this species occupy the identified habitat types during the breeding season that special management considerations such as those provided in these guidelines need to be considered. In Texas, vireo habitat is found on rocky limestone soils of the Edwards Plateau, Cross Timbers and Prairies, eastern Trans-Pecos and, to a limited extent, on igneous soils in the Chisos Mountains. Although Blackcapped Vireo habitat throughout Texas is highly variable with regard to plant species, soils, temperature, and rainfall, all habitat types are similar in vegetation structure; i.e. the “overall look” is somewhat similar although the plant species vary.

Vireos require broadleaf shrub vegetation reaching to ground level for nesting cover. They typically nest in shrublands and open woodlands with a distinctive patchy structure. Typical habitat is characterized by shrub vegetation extending from the ground to about 6 feet or more and covering about 30-60% or greater of the total area. In the eastern portion of the vireo’s range, the shrub layer is often combined with an open, sparse to moderate tree canopy. Patches of open grass or bare rock separate the clumps of shrubs and trees. In central Texas, this habitat is often regrowth from disturbances such as clearing, fire, and browsing. In the Edwards Plateau and Cross Timbers Regions, vireo habitat occurs where soils, topography, and land use produce scattered hardwoods with abundant low cover. Common broadleaved plants in vireo habitat in these regions include: Texas (Spanish) oak, Lacey oak, shin oak, Durand

(scaleybark) oak, live oak, mountain laurel, evergreen sumac, skunkbush sumac, flameleaf sumac, redbud, Texas persimmon, Mexican buckeye, elbowbush and agarita. Although Ashe juniper is often part of the plant composition in vireo habitat, preferred areas usually have a low density and cover of juniper.

In the western Edwards Plateau and Trans-Pecos Regions, on the western edge of the vireo's range, the birds are often found in canyon bottoms and slopes where sufficient moisture is available to support diverse shrub vegetation. Dominant woody plants in this habitat type include sandpaper oak, Vasey oak, Texas kidneywood, Mexican walnut, Texas persimmon, lotebush, brasil, wafer ash, mountain laurel, cenizo, whitebrush, and guajillo. For all habitat types, the plant composition appears to be less important than the presence of adequate broad-leaved shrubs, foliage to ground level, and mixture of open grassland and woody cover. Deciduous and broad-leaved shrubs and trees throughout the vireo's range are also important in providing habitat for insects on which the vireo feeds.

Life History

Black-capped Vireos arrive in Texas from mid-March to mid-April. Adult males often arrive before females and first-year males to select their territories. Vireos' territories are often clustered in patches of suitable habitat. Although territories range in size from 1 to 16 acres, most territories are 5 to 10 acres. Males sing to attract mates and defend territories. Many males can be heard singing throughout the breeding season, but singing begins to decline by July. The vireo's song is described as hurried and harsh, composed of numerous phrases separated from one another by pauses of 1 to 3 seconds. Nesting begins after the females arrive in late March to early April. Both the male and female select the nest site and build the nest, but the female often completes it. First nests are built in about 6 to 9 days, but subsequent nests can be built in one day. The cup-shaped nest is suspended from its rim in a fork of a branch about 1 to 6 feet above the ground. However, most Black-capped Vireos nest at about "door-knob" height. Nests have been found in a variety of species including shin oak, scalybark oak, Texas oak, Vasey oak, sumac, Texas persimmon, juniper, Texas redbud, Mexican buckeye and Texas mountain laurel. The vireo usually nests more than once in the same year. A new nest is constructed each time. Three to four eggs are usually laid in the first nesting attempt, but later clutches may contain only 2 to 3 eggs. The first egg is usually laid one day after completion of the nest, with one egg being laid each subsequent day. Incubation takes 14 to 17 days, and is shared by the male and female. Vireo chicks are fed insects by both adults. The young leave the nest 10 to 12 days after hatching. Fledglings are cared for by the female alone, the male alone, or by both adults. Sometimes the parents split the brood and each care for one or more young. Occasionally, males or females will leave the care of the young to their mate, and attempt another nesting effort. Vireos may live for more than five years, and usually return year after year to the same territory, or one nearby. The birds migrate to their wintering grounds on Mexico's western coast beginning in July, and are gone from Texas by mid-September.

Threats and Reasons for Decline

The Black-capped Vireo is vulnerable to changes in the abundance and quality of its habitat. Habitat may become unsuitable for vireos because of natural plant succession, sustained brood parasitism by the Brown-headed Cowbird, or because of human activities. Factors that can adversely affect vireo habitat include broad-scale or improper brush clearing, fire suppression, over browsing by deer and livestock, and urbanization. Loss of tropical wintering habitat is also a concern, but requires further study. Poorly planned brush management practices on rangeland may remove too much low growing woody cover, especially when large acreages are treated at one time. This eliminates or reduces habitat value for vireos and for other wildlife, such as White-tailed deer, quail, small mammals, and various songbirds. Over browsing of broad-leaved shrubs by goats, deer, and exotic animals reduces the vegetation in the 2- to 4-foot zone, making it unsuitable for vireo nesting. Continued overuse of these preferred browse plants over many years may eventually eliminate them from the plant community, thus permanently altering the habitat.

In the absence of natural processes, active, well-planned land management is often required to maintain good vireo habitat, especially in the eastern portion of its range. Disturbance, particularly fire, plays an important role in maintaining, improving, or creating vireo habitat. The rangelands of central Texas, and the various plant communities these lands support, evolved under the influence of periodic fires. Historically, these natural and manmade fires maintained a matrix of open grassland, shrubland and woodland. Fire stimulated shrubs to sprout multiple stems at the base, thus providing areas of dense foliage at the 2- to 4-foot level, required by vireos. In the past, fire was responsible for maintaining or periodically returning some areas to vireo habitat. Today, prescribed burning, a valuable range and wildlife management tool occurs on many ranches throughout Texas. However, the combination of overgrazing, brush clearing, and lack of fire in the recent past has reduced vireo habitat in many other areas. Natural plant succession is less of a concern in the western portion of its range where suitable habitat persists for long periods.

Human activities have provided favorable habitat for the Brownheaded Cowbird, which parasitizes vireo nests. The cowbird is usually associated with livestock, farms, dairies, and grain fields, where it benefits from waste grain and insects. They may also be attracted to backyard bird feeders, trash dumps, or other urban areas where food and water are available. Cowbirds lay their eggs in other birds' nests, leaving the host bird to raise their young. The female cowbird often removes an egg or a nestling from the host nest before she lays an egg in it. Cowbird chicks hatch earlier than most hosts's young and are thus able to out-compete the smaller vireo nestlings for food and, consequently, the young vireos typically starve. While some birds remove cowbird eggs from their nest, the vireo does not, although it is known to abandon parasitized nests. Thus parasitized nests usually fail to produce vireos. The amount of brood parasitism varies greatly from one population to another throughout the state, ranging from 10 to over 90% of the nests. Brown-headed Cowbirds are also known to remove vireo chicks from active nests. Evidence indicates that sustained parasitism pressure may lead to local extinctions of vireo populations. Direct habitat loss and fragmentation due to urban and

suburban development is a major threat in expanding urban areas of Travis, McLennan, Dallas, Bexar, and Kerr counties. Problems associated with suburban expansion, such as increases in predation by dogs, cats, raccoons, skunks, and jays, have also impacted the vireo.

Recovery Efforts

Research is underway to better understand the distribution, life history, habitat requirements, and land management practices affecting the Blackcapped Vireo. Population surveys during the breeding season are being conducted in known and potential habitat areas. Efforts to provide information and educational opportunities to landowners and the public regarding life history and habitat requirements of the vireo are also a vital part of the recovery effort. Major research and/or recovery efforts are being conducted on Department of Defense's Fort Hood and Camp Bullis, Travis County and the City of Austin's Balcones Canyonlands Preserve, the U.S. Fish and Wildlife Services' Balcones Canyonlands National Wildlife Refuge, TPWD's Kerr Wildlife Management Area, properties owned and/or managed by The Nature Conservancy of Texas, and in Mexico. Additionally, Environmental Defense through their Safe Harbor Agreement with the U.S. Fish and Wildlife Service is assisting many landowners with thousands of acres to manage and/or create habitat for the benefit of the vireo. Research is ongoing regarding the impact of cowbirds on vireo populations in Texas. Research efforts in Mexico are also underway to gather information concerning life history, habitat requirements, and conservation threats on the wintering range. TPWD biologists are monitoring populations on both state and private lands, and voluntary cowbird trapping is being conducted by more than 400 landowners in counties throughout the range of the vireo. Habitat conservation planning is underway in counties such as Travis and Bexar to allow for urban expansion and development while still conserving endangered species habitat. Intensive monitoring of a large population at the U.S. Army Fort Hood Military Installation is on-going. Finally, efforts to provide information, technical assistance, and incentives for private landowners to incorporate management for Black-capped Vireos into their livestock and wildlife operations are an essential part of the recovery process.

Where To See the Black-capped Vireo

A number of state lands offer opportunities to see and learn more about the Black-capped Vireo. These include Colorado Bend State Park State Park (SP), Devils River State Natural Area (SNA), Kerr Wildlife Management Area, Kickapoo Cavern SP, Lost Maples SNA, and Hill Country SNA. Also, the Balcones Canyonlands National Wildlife Refuge near Austin offers additional opportunities to see Black-capped Vireos. Because the Black-capped Vireo is an endangered species, birders and other observers should carefully follow certain viewing ethics. Observers should be careful not to flush birds from the nest or disturb nests or young. Black-capped Vireos should be viewed only from a distance with binoculars. Do not use recorded calls of the Black-capped Vireo or the Screech Owl to attract birds, and be careful that your presence does not unduly disturb or stress the birds.

How You Can Help

You can help by learning more about the habitat requirements of the Blackcapped Vireo and incorporating management practices which create or maintain habitat for these birds. You can also encourage and support private landowners who are managing their land to protect and provide habitat for endangered species. The Black-capped Vireo is a beautiful songbird and is much sought after among people who enjoy birdwatching and nature study. Possibilities exist for landowners to take advantage of the growing demand for natural history tours and vacations. Landowners interested in more information concerning nature-based tourism opportunities should contact the Wildlife Diversity Branch, Texas Parks and Wildlife Department, Austin (800) 792-1112; Environmental Defense, Austin (512) 478-5161; the Nature Conservancy, San Antonio (210) 224-8774. You can also be involved with the conservation of Texas' nongame wildlife resources by supporting the Special Nongame and Endangered Species Conservation Fund. Special nongame stamps and decals are available at Texas Parks and Wildlife Department (TPWD) field offices, most state parks, and the License Branch of TPWD headquarters in Austin. Part of the proceeds from the sale of these items is used to conserve habitat and provide information to the public concerning endangered species. Conservation organizations in Texas also welcome your participation and support.

For More Information Contact

Texas Parks and Wildlife Department
Wildlife Diversity Branch
4200 Smith School Road
Austin, Texas 78744
(512) 912-7011 or (800) 792-1112
or
U.S. Fish and Wildlife Service
Ecological Services Field Office
10711 Burnet Road, Suite 200
Austin, Texas 78758
(512) 490-0057

Management guidelines are available from the Texas Parks and Wildlife Department and U.S. Fish and Wildlife Service for landowners and managers wishing to know more about rangeland management practices which improve habitat for the Black-capped Vireo.

References

Armstrong, W.E., M.W. Lockwood, and D.K. Stuart. 1992. *Performance report: Black-capped vireo management on Texas Parks and Wildlife Department lands.* Federal Aid Project No. E-1-4, Job No. 3.2.

Armstrong, W.E., C. Travis, and B.G. Alexander. 1989. *Final report: Black-capped vireo management.* Federal Aid Project No. W-103-R-19, Job No. 60.

Farquhar, C.C. and J. P. Maresh. 1998. *Population biology and habitat characterization of black-capped vireos at Dolan Falls Ranch Preserve, Val Verde County, Texas. Year two final report.* Endangered Resources Branch, Texas Parks and Wildlife Department. Austin, Texas.

Graber, J.W. 1961. *Distribution, habitat requirements, and life history of the black-capped vireo.* Ecol. Mon. 31:313-336.

Grzybowski, J.A., R.B. Clapp, and J.T. Marshall, Jr. 1986. *History and current population status of the Black-capped vireo in Oklahoma.* American Birds 40:1151-1161.

Grzybowski, J,A., D.J. Tazik, and G.D. Schnell. 1994. *Regional analysis of blackcapped vireo breeding habitats.* Condor 96:512-544.

Grzybowski, J.A. 1995. "Black-capped vireo (*Vireo atricapillus*)." The birds of North America, No. 181. The Academy of Natural Sciences, Philadelphia, and The American Ornithologist Union, Washington D.C.

Oberholser, H.C. 1974. *The bird life of Texas*. Edgar Kincaid, Ed., University of Texas Press, Austin, Texas. Vol. 2, 1069 pp.

Robinson, S.K., S.I. Rothstein, M.C. Brittingham, L.J. Petit, and J.A. Grzybowski. 1995. "Ecology and behavior of cowbirds and their impact on host populations" (pp 428-460) *in* T.E. Martin and D.M. Finch, eds. *Ecology and management of neotropical migratory birds.* Oxford University Press, New York, New York.

U.S. Fish and Wildlife Service. 1991. *Black-capped vireo recovery plan.* Endangered Species Office, Albuquerque, N.M.

U.S. Fish and Wildlife Service. 1996. *Black-capped vireo population and habitat viability assessment report.* Complied and edited by Carol Beardmore, Jeff Hatfield, and Jim Lewis in conjunction with workshop participants. Report of a September 18-21, 1995 workshop arranged by the U.S. fish and Wildlife Service in partial fulfillment of U.S. National Biological Service Grant No. 80333- 1423. Austin, Texas. ix + 57 pp.

Management Guidelines for Black-capped Vireo

The following guidelines address land management practices that can be used to maintain, enhance, or create Black-capped Vireo habitat. They are intended primarily to serve as general guidance for rural landowners and others managing land for livestock and/or wildlife in Texas. The guidelines are based on our current understanding of the biology of this species.

Private landowners have a tremendous opportunity to conserve and manage the fish and wildlife resources of Texas. The objective of these guidelines is to provide landowners with recommendations about how typically-used land management practices could be conducted so that it would be unlikely that Black-capped Vireos would be impacted. The guidelines will be updated periodically to make them more practical and useful to rural landowners. The guidelines are based on the best available information and current understanding about the biology of the vireo, but may be refined as additional biological data are collected. TPWD biologists have prepared these guidelines in consultation with USFWS biologists to assure landowners who carry out land management practices within the guidelines that they would know, with the greatest certainty possible, that they would not be in violation of the Endangered Species Act.

This document also provides information on land management practices that are appropriate for protection and/or enhancement of habitat.

The categories were chosen to represent commonly encountered vegetation types and to address common questions regarding the effect of management practices on Black-capped Vireos. In addition, suggestions are offered that promote conservation of soil, water, plant, and wildlife resources.

Prescribed Burning

Fire is a natural component of Texas rangelands, and prescribed burning has many range and wildlife management benefits. These include improved forage quality and availability for livestock and deer, and maintenance of desirable plant composition and structure. Prescribed burning in some portions of the vireos range can be an excellent tool used to maintain or create the desired vegetation structure for vireo nesting; i.e. a mosaic of shrubs and open grassland with abundant woody foliage below 10 feet. If planning these activities in Bandera, Kerr, Kimble, Real, and Uvalde counties, landowners should avoid impacts to Tobusch fishhook cactus (*Ancistrocactus tobuschii*), a federally listed endangered plant, which occurs on similar soils as the vireo. Cool season burns that are patchy and low intensity, conducted prior to March 15, are often recommended to control small juniper, thus maintaining the relatively open shrublands preferred by vireos. Care should be taken to burn under appropriate humidity and wind conditions to maintain the proper black-capped vireo vegetation profile. Prescribed burns conducted during late spring and early fall, under hotter conditions, can be used to set back plant succession to create vireo habitat; however, warm season burns should be done only in areas that do not currently support Black-capped Vireos. On grazed rangeland, prescribed burns should be coordinated with livestock rotation to allow for needed deferments. It is best to avoid burning relatively small areas within large pastures to prevent heavy grazing pressure by livestock and/or deer on burned areas.

Desirable burn intervals for cool season burns vary throughout the state, depending on rainfall and vegetation type. Field experience shows that, for much of the Hill Country, a burning interval of 5 to 7 years is considered desirable to keep Ashe juniper (cedar) invasion in check and to allow regrowth of broad-leaved shrubs. Maintaining open grassland areas between clumps of shrubs is important for good vireo habitat.

Research is needed to better understand the use of prescribed burning to maintain and create vireo habitat, and to develop guidelines on desirable burn intervals throughout the vireo's range in Texas, especially in the western Edwards Plateau and eastern Trans-Pecos. Assistance from people experienced with the use of prescribed burning is highly recommended.

Landowners are encouraged to have a complete written prescribed burn plan addressing the objectives of the burn, required weather conditions, grazing deferments, fireguard preparations, personnel and equipment needed for nest concealment. Livestock and deer management, which allows woody plants such as live oak, shin oak, sumac, Texas persimmon, elbowbush, redbud, and hackberry to make dense growth

from zero to at least 8 feet, is needed. On ranches throughout Texas, moderate stocking, rotation of livestock, controlling deer and exotic ungulate numbers and proper use of desirable browse plants will benefit deer and livestock as well as Black-capped Vireos.

To provide adequate nesting cover for vireos, woody plants should receive only limited browsing during the spring and summer. If animals (livestock, deer, and exotics) are wellmanaged and kept within recommended stocking rates, this can be achieved. Experience has shown that, in general, ranges stocked with cattle and deer tend to maintain better vireo nesting cover than ranges stocked with goats and exotic animals.

Limit browsing pressure, especially during the growing season, to no more than 50% of the total annual growth (current year twigs and leaves) within reach of animals on any given plant. This will maintain plants that are already vigorous and allow for improvement of those with less than ideal structure. As a rule of thumb, if you can “see through” a needed, a detailed map showing how the burn will be conducted, and notification and safety procedures.

Landowners are advised to contact local representatives of the Texas Parks and Wildlife Department, USDA Natural Resources Conservation Service, or Texas Cooperative Extension for help in developing and implementing a prescribed burning program designed specifically for your property and management objectives.

Selective Brush Management

In some portions of the vireos range, particularly the central and eastern segment, increases in juniper (cedar) and other woody species can cause the vegetation to grow out of the patchy, low shrub cover that provides suitable habitat. In these communities, good nesting habitat generally has between 30-60% shrub canopy. Selective brush removal with herbicides or mechanical means during the non-breeding season (September-February) can be used to keep the habitat favorable for vireo nesting.

For example, the selective removal of juniper, mesquite, or pricklypear (less desirable to the vireo and to the rancher) serves to maintain the proper shrub canopy and encourages growth of associated broad-leaved shrubs. Selective brush removal should strive to maintain the desired low shrubby structure. Radical changes in shrub canopy from one year to the next over large areas should be avoided, since this may alter vireo habitat too drastically within a short time-frame. However, moderate thinning of dense (>60%) shin oak so that the low canopy is maintained at 30-60% shrub canopy can enhance habitat. Western Edwards Plateau rangelands comprised primarily of mesquite, often referred to as mesquite flats, are not considered Black-capped Vireo habitat; therefore, mesquite control in these areas will not affect vireos. When using herbicides, careful attention to the kinds, amounts, timing, and application technique will achieve the best control of target species at minimum cost. Precise application also reduces the risk of environmental contamination and offsite effects. It is best to choose highly selective individual plant treatment methods, whenever practical, to avoid damage to desirable shrubs such as live oak, shin oak, Texas oak, hackberry, Texas persimmon, sumac, redbud, and elm. Herbicides should always be used in strict

accordance with label directions, including those for proper storage and disposal of containers and rinse water. Herbicide applications should not occur during the breeding season, except for basal applications or individual plant treatment of prickly pear pads.

Carefully planned mechanical methods of brush management such as chaining, roller chopping, shredding, hand cutting, hydraulic shearing, grubbing, and tree dozing can be used to achieve desirable shrub composition and to stimulate basal sprouting of key woody species in order to maintain, enhance, or create vireo habitat. If planning these activities in Bandera, Kerr, Kimble, Real, and Uvalde counties landowners should avoid impacts to Tobusch fishhook cactus (*Ancistrocactus tobuschii*), a federally listed endangered plant, which occurs on similar soils as the vireo. As with other habitat manipulation procedures, mechanical methods should only be used during the non-breeding season (September-February) and done in such a way as to maintain the proper black-capped vireo vegetation profile. Remember that good grazing management and moderate stocking rates can reduce woody plant invasion and therefore the need for expensive brush control practices.

Finally, although brush management practices can be used to change the structure and composition of vegetation so that vireos may occupy the habitat, landowners should seek technical assistance when planning brush management practices in habitat that is known to be occupied by Blackcapped Vireos. Since brush management activities can affect habitat for the Golden-cheeked Warbler as well as the Black-capped Vireo, landowners are encouraged to learn about the habitat requirements of both endangered songbirds (see TPWD leaflet on the Golden-cheeked Warbler).

Grazing and Browsing Management

Excessive browsing by goats, exotic animals, and white-tailed deer destroys the thick woody growth browse plant at “door knob” to “eye level”, then too much stem and leaf growth has been removed. Installation of structures needed to facilitate good grazing management; i.e., fencing, pipelines, water troughs, water tanks, and ponds, need to avoid removing vireo habitat, should include only enough space to allow for proper operation and maintenance, and need to conduct activities during the non-nesting period (September-February).

Careful management of woody plants will not only provide for the habitat needs of Black-capped Vireos, but will also create high quality habitat for deer and other wildlife as well as livestock. Technical assistance in identifying browse plants and determining proper use is available from the Texas Parks and Wildlife Department and USDA Natural Resources Conservation Service.

Reducing Impacts From Cowbirds

Brood parasitism by Brown-headed Cowbirds poses a serious threat to successful reproduction in some populations of Black-capped Vireos. Research is currently underway to better understand the impacts of cowbirds on vireos. Because livestock attract cowbirds, management to reduce cowbird impacts is important on grazed land.

Because cowbirds are attracted to easily available sources of food, avoid spilling or scattering grain. Supplemental feeding areas should be moved frequently and kept free from accumulations of waste grain. This would help to prevent sparsely vegetated areas of compacted soils, which also tend to attract cowbirds.

Because cowbirds can be attracted by the presence of livestock, grazing management can be used to remove grazing animals from areas where vireos nest. For example, livestock can be rotated away from prime nesting habitat during the breeding season. Another option is to graze stocker cattle during the fall and winter, resting pastures during the spring/summer nesting season. Resting pastures periodically improves range condition and may also help reduce nest parasitism.

Finally, trapping and/or shooting cowbirds can be very effective in reducing vireo brood parasitism, since a single female cowbird can parasitize hosts over a sizeable area (4-5 acres, or more). Mounted mobile traps, placed near watering sites as livestock are rotated through pastures, have been used successfully to reduce cowbird numbers. Properly placed stationary traps have also proven effective in reducing cowbird numbers and parasitism in a local area. Shooting cowbirds at places where they congregate is another option, although this method is often not selective for the cowbirds responsible for the parasitism. Shooting female cowbirds within Black-capped Vireo nesting habitat for as little as one hour a week can reduce parasitism.

Persons trapping cowbirds need to be certified for the handling of non-target birds under the general trapping permit held by TPWD. Preventing mortality of non-target birds is very important, so traps must be carefully monitored and checked frequently.

Contact Texas Parks and Wildlife Department for information and assistance in implementing a cowbird control program.

Habitat Restoration

For landowners in central Texas wishing to restore or create habitat for the Black-capped Vireo in areas currently unoccupied by vireos, the following suggestions are offered.

One type of restorable habitat is an open shrubland capable of growing a diversity of woody plants, where much of the low-growing cover has been removed through overbrowsing by livestock or deer. Controlling browsing pressure by reducing animal numbers and providing pasture rest will allow the natural reestablishment of low-growing shrub cover needed by vireos. Prescribed burning and or mechanical methods described under the Selective Brush Management section may be needed to jump start the resprouting and root sprouting of trees and shrubs.

Habitat restoration may also be possible in areas where the shrub layer has become too tall or dense to provide good vireo habitat. In these areas, well-planned use of controlled fire or other brush management techniques listed above can reduce overall shrub height, stimulate basal sprouting of shrubs, and reduce shrub density to produce more favorable habitat for vireos. The goal is to maintain the critical low growing canopy cover of 30-60%.

Also, in areas where the brush has become too dense, selective thinning conducted during the nonnesting period (September through February) could be done to produce a more open habitat. Carefully planned brush management could be used to encourage regeneration and lateral branching of desirable shrubs by allowing sunlight to reach the ground. The idea is to restore areas to relatively open, low-growing shrub/grassland vegetation that may provide habitat preferred by vireos. If planning any of these activities in Bandera, Kerr, Kimble, Real, and Uvalde counties landowners should avoid impacts to Tobusch fishhook cactus (*Ancistrocactus tobuschii*), a federally listed endangered plant, which occurs on similar soils as the vireo.

Currently, there is no strong evidence to suggest that habitat manipulation will be necessary on many parts of the drier western and southwestern Texas range (western Edwards Plateau and eastern Trans-Pecos) as mature vegetation communities in these areas are used successfully by vireos. Unless browsing pressure or other catastrophic disturbances have eliminated desirable shrub land in these areas, the only requirement needed is time. Fire is of limited use in lower rainfall areas devoid of fine fuels and the plant density required for cost-effective prescribed burns.

There are a number of agencies and organizations conducting management activities benefiting the vireo that can provide useful information and/or assistance to landowners. These include Texas Parks and Wildlife Department, USFWS, The Nature Conservancy, USDA Natural Resources Conservation Service, and Environmental Defense.

Summary

In the Edwards Plateau and other parts of the range supporting woodland or savanna, periodic prescribed burning and selective brush management are very effective in maintaining and creating Black-capped Vireo habitat. In all parts of the range, control of deer and exotic wildlife numbers, and good grazing management practices, including proper stocking and rotational grazing, are management options that can be used to maintain and enhance habitat for Black-capped Vireos. These same management tools will also maintain diverse and productive rangelands. In addition to providing food, fiber, and support for rural landowners, wellmanaged rangelands provide habitat for a wide variety of wildlife, and benefits such as clean water, natural diversity, and recreational opportunities for all Texans.

Technical assistance in range and wildlife management, including grazing management, determination of proper stocking rates, prescribed burning, brush management, and management for endangered species, is available to landowners and managers by contacting the Texas Parks and Wildlife Department, USDA Natural Resources Conservation Service, or Texas Cooperative Extension. Further guidance and specific questions concerning Black-capped Vireo research, endangered species management and recovery, and the Endangered Species Act, should be directed to the U.S. Fish and Wildlife Service or Texas Parks and Wildlife Department. If, after reading this leaflet, you are still unsure whether or not your management plans will adversely affect the Vireo or its habitat, please contact the U.S. Fish and Wildlife Service for assistance.

Appendix J

Nongame Wildlife Management Recommendations

by
Matt Wagner
Texas Parks & Wildlife Department

Follow guidelines provided through TPWD's Texas Wildscapes Program for specific practices to provide food, water and cover requirements for various nongame species. Following is a list and brief description of habitats and various management practices that are beneficial to nongame species of wildlife. It should be noted that many of the practices are also beneficial to and recommended for game species (eg.,, deer, dove, turkey, quail, etc.). Conversely, most management practices directed at managing game species will also be beneficial to many species of nongame wildlife.

HABITAT CONTROL

Prairie/grassland restoration - Establishing a mixture of native grasses and forbs on disturbed range or farm land to provide habitat for wildlife diversity. Use the TPWD wildscape plant list. Restore and maintain mid and tall grass prairie by planting native seed stock, using species such as Indiangrass, Little bluestem, Big bluestem, Switchgrass, and Sideoats grama. Follow guidelines in Appendix K. Reduce woody plants near restored blocks of prairie to reduce incidence of predators and cowbirds. Use prescribed burning or apply selective herbicides in late summer or early fall using individual plant treatments according to recommendations provided by Texas A&M University Extension Service, Natural Resource Conservation Service and local Fire Department protocols. Summer burns are more effective at woody plant control but avoid burning during June and early July. Use rest-rotation grazing whereby one pasture in a multiple pasture system receives one year of rest on a rotational basis at least every third or fourth growing season. Pasture deferment should coincide with nesting season and seed set. Grass height of 4-12 inches is desirable for feeding and nesting cover of ground-besting birds. Delay haying until July to avoid destruction of ground-nesting birds. Avoid fragmenting large blocks of habitat. Area sensitive prairie species benefit from tracts of 125 - 250 acres or more in size. Minimize edge by restoring square rather than irregular shaped blocks. Connect scattered plots of prairie by restoring connecting corridors. If this is not possible, create restoration plots of 15-20 acres located within a mile of each other. Incorporate hayfields, improved pastures or CRP lands to minimize edge.

Forest/woodland restoration - Establishing native trees and shrubs where appropriate to restore native habitats for wildlife diversity. Use the TPWD Wildscapes plant list.

Shrubland restoration - Establishing native shrubs or small trees where appropriate to restore native habitats for wildlife diversity. Use TPWD the Wildscapes plant list. Early-successional habitats can be provided by establishing hedgerows or

plots of fruit-bearing native shrubs. Maintain brush along fencelines or shelterbelts with saplings and dense thickets of shrubs and vines for nongame birds such as Loggerhead shrike and Blue grosbeak.

Wetland restoration - Establishing water flows and native vegetation in former wetlands to provide wildlife habitat.

Riparian area management - Provide alternate livestock feeding and watering sites, exclude pastures with riparian areas from livestock grazing or fence out livestock. Defer grazing in riparian areas during April - October.

Prescribed burning - The use of fire to restore, enhance or maintain native habitats for wildlife diversity. Prescribed burns should be conducted according to TPWD, USDA Natural Resource Conservation Service, Texas Agricultural Extension Service and Texas Natural Resource Conservation Commission protocols in coordination with local Fire Department.

Mowing - Used to manage invading woody plants and maintain desirable herbaceous vegetation for wildlife food and cover. Mow before or after nesting season to avoid grassland nesting birds (most nesting occurs generally April-June).

Exotic or "weedy" plant control - Use of fire, selective herbicides, and mechanical methods to control invasive plants in important habitat types to maintain or restore wildlife populations.

Conversion of exotic vegetation - Removal and replacement of exotic vegetation with native plants for wildlife habitat.

Restore and maintain oak savannah/grassland - Prescribed burns should only be conducted according to TPWD, USDA Natural Resources Conservation Service, Texas Agricultural Extension Service, and Texas Natural Resource Conservation Commission protocols in coordination with local Fire Department. Most prescribed burns are conducted during December-March. Late winter-early spring burns will not impact cool season forbs as much as mid-winter burns. Summer burns are more risky, but could be more effective at woody plant control. If mechanical brush control is used leave brush piles for small mammals. Reseed areas with native grass/forb mixtures as necessary.

Maintain oak woodlands with dense understory - Exclude livestock during early spring, and late summer-fall and winter peak stress periods for wildlife. This allows for understory regeneration, and berry and mast production, and keeps livestock from reducing evergreen browse during periods of reduced forage availability. Maintain dense horizontal layers of understory vegetation for nesting warblers, vireos and other songbirds. Connect fragmented blocks of habitat by planting a diversity of native, fruit-bearing trees and shrubs.

Protect/restore oak-juniper woodlands - Maintain areas with mature cedar and hardwoods, the broad - leaved species (Texas oak, Plateau live oak, cedar elm, lacey oak, etc.) with at least 50% canopy cover. Control overbrowsing by white-tailed deer, exotic game and livestock.

Enhance mid-succession brush/shinnery habitat - Promote brush regeneration with prescribed fire and/or mechanical methods that remove the top-growth of woody plants but encourage root sprouting. Use proper grazing management.

Protect karst, caves and other underground resources - Construct appropriate cave gates or other features to minimize human disturbance to roosting bats. Insure quality underground water resources through proper disposal of toxicants and runoff management. Maintain unobstructed cave entrance for easy access by bats.

EROSION CONTROL

Riparian area management - Provide alternate livestock feeding and watering sites, exclude pastures with riparian areas from livestock grazing or fence out livestock. Defer grazing in riparian areas during April - October. Control erosion using water structures and native plants.

Prairie/grassland restoration - Establishing a mixture of native grasses and forbs on disturbed range or farm land to provide habitat for wildlife diversity. Use the TPWD Wildscapes plant list.

Forest/woodland restoration - Establishing native trees and shrubs where appropriate to restore native habitats for wildlife diversity. Use the TPWD Wildscapes plant list.

Trails and signs - Create walkways or paths to manage human impact and reduce erosion in sensitive areas.

PREDATOR CONTROL

Avian predator and nest parasite control – Selected avian predators (grackles, starlings, and brown-headed cowbirds) may be controlled as a part of a PLANNED PROGRAM to reduce impacts on nesting neotropical and resident songbirds through shooting and trapping, grazing management, and maintenance of large blocks of wildlife habitat.

Carnivore-furbearer control - Reduce the impact of coyotes, raccoons and other carnivores on colonial nesting birds. Control of feral dogs and cats by humane methods can enhance grassland bird nesting success and survival.

Fire ant control - Control fire ants using bait (such as Logic) or other approved product during spring-fall.

PROVIDING SUPPLEMENTAL WATER

Wetland restoration - Establishing water flows and native vegetation in altered coastal and inland wetlands.

Well/trough/pond with overflows - Establish additional shallow water supplies through construction of ground-level wildlife ponds, or adding overflow systems on existing wells and troughs. Protect these areas from livestock use. Follow TPWD Wildscapes Program guidelines and guidelines in Appendix O.

PROVIDING SUPPLEMENTAL FOOD

Establish food plots ½ to 1 acre in size by shallow discing and/or sowing native seed-producing food plants for birds (i.e., sunflower, millet, partridge pea, sesame).

Butterfly and hummingbird gardens - Establish native wildflowers, trees, shrubs, vines, or cultivated flowers as food sources for butterflies and hummingbirds. Follow the TPWD Wildscapes Program plant list.

Feeding stations - Set up liquid, seed and free-choice feeding stations for resident and migratory birds. Especially critical during migration and winter months when natural food sources are scarce. Follow TPWD Wildscapes Program guidelines.

Reduction of broadcast insecticides - Increases the amount of insects available as a wildlife food source for birds, reptiles and amphibians.

Conversion of exotic vegetation - Removal and replacement of exotic vegetation with native plants for wildlife habitat.

PROVIDING SUPPLEMENTAL SHELTER

Brush piles/rock piles - Leaving or stacking cleared brush and rock to create denning and escape cover for birds, small mammals, reptiles and amphibians. Follow TPWD Wildscapes Program guidelines.

Thickets of native brush - Create or maintain thickets of native shrubs/trees for refuge.

Prairie/grassland restoration - Establishing a mixture of native grasses and forbs on disturbed range or farm land to provide habitat for wildlife diversity. Use the TPWD wildscape plant list.

Snag maintenance and creation - Protect snags and deadfall for cavity-dwelling species. Create snags using selective herbicides or girdling undesirable woody plants.

Nest boxes and perching platforms/poles - Provide nest structures for songbirds, owls, small mammals, bats, raptors, herons, and other nongame species. Where suitable nest cavities are in short supply due to lack of dead timber snags that provide cavities or natural timber hollows, artificial nest/roost boxes can be erected to help alleviate these shortages for particular species. Some of the birds and mammals that can benefit from these structures are: bluebirds, chickadees, titmice, prothonotary warbler, wrens, woodpeckers, screech owls, kestrels, wood ducks squirrels, and bats. The TPWD Wildscapes Program can furnish additional information regarding number, specifications, placement, and maintenance of these structures for specific species.

CENSUS

Time area counts - The number of individual species seen or heard during a fixed time frame per unit area (eg., point counts for birds, squirrels).

Drift fences/pit fall traps - A system of flashing or similar material arranged on the ground to funnel small wildlife species into buried buckets or other pitfall trap. (used primarily for reptiles and amphibians).

Small mammal traps - Small live traps arranged along a trapline to sample small mammals.

Other or Indicator Species: Bobwhite quail, dove, and wild turkey may be desired game species to have in the area, which may be expressed in the overall objective. The land management techniques that have been recommended primarily for the deer population (**Appendix F**) can benefit these game birds and many other non-game species of wildlife also. These are: prescribed burning, disking, cattle rotation or exclusion from woods and certain native grass areas during certain periods, and supplemental food plots. See **Appendix G** for more information on quail and **Appendix H** for turkey.

Nest/Roost boxes for Cavity Nesters/Roosters: Where suitable nest cavities are in short supply due to lack of dead timber snags that provide cavities or natural timber hollows, artificial nest/roost boxes can be erected to help alleviate these shortages for particular species. Some of the birds and mammals that can benefit from these structures are: bluebirds, chickadees, titmice, prothonotary warbler, wrens, woodpeckers, screech owls, kestrals, wood ducks, black-bellied whistling ducks, squirrels, and bats. The TPWD Nongame and Urban Program can furnish additional information regarding number, specifications, placement, an maintenance of these structures for specific species.

Neotropical Migratory Birds: These are birds that breed in the United States and Canada, and migrate to the Neotropical regions of Mexico, Central and South America, and the Caribbean during the nonbreeding season. As mentioned in the General Habitat Management section at the beginning of this example plan, loss and fragmentation of woodland and native grassland habitat has reduced populations of many neotropical populations. Neotropicals include the following groups of birds: kites,

hawks,falcons, owls, cuckoos, nightjars, hummingbirds, flycatchers, swallows, thrushes, vireos, warblers, tanagers, grosbeaks, buntings,sparrows, orioles, and blackbirds. For more information regarding neotropical status, surveys, and possible management strategies, contact the Partners in Flight Program Coordinator at TPWD Headquarters in Austin.

Birds of management concern for Edwards Plateau and Cross Timbers and Prairies region include:

Golden-cheeked Warbler
Black-capped Vireo
Bell's Vireo
Painted Bunting
Montezuma Quail (very localized)
Black-chinned Hummingbird
Rufous-crowned Sparrow
Scissor-tailed Flycatcher
Cave Swallow
Gray Vireo (SW part only)
Canyon Towhee
Cassin's Sparrow
Orchard Oriole
Northern Bobwhite
Yellow-billed Cuckoo
Elf Owl (SW part only)
Louisiana Waterthrush

Waterfowl/Wading Birds: To improve the habitat for dabbling ducks and wading birds, construction of 3 - 4 foot high levees with a drop-board water control structure in suitable low areas could back up and hold water during the fall, winter, spring, summer months, depending on water management strategy. This could provide shallow (6 to 24 inches) water feeding areas for migrant ducks, wading birds, and spring-nesting wood ducks.. Exclude livestock from this area with installation of an electric or barbed wire fence around the perimeter, at least 50 yards away from the maximum flooded area. Contact the local Natural Resources Conservation Service or TPWD waterfowl biologist for assistance in location and construction of the levee.

Installation of wood duck nest boxes in and around the edge of shallow water areas can increase nesting sites for wood ducks that are normally present in the summer, but lack suitable nesting sites due to lack of natural cavities in older, damaged trees or lack of these type of trees. One nest box (not within view of other nest boxes) per acre of brood-rearing wetland habitat is usually sufficient. These should be erected on 10 foot metal or treated wooden posts in or at the edge of wetlands.

Feral Hogs should be controlled by shooting and live trapping whenever possible. Most success at this usually occurs during the winter when feral hogs are having to travel

more to find food. Beside rooting up pastures, feral hogs compete directly with deer, turkey and most other wildlife species that rely heavily on acorns and other hard and soft mast for winter food. Deer also tend to avoid areas when feral hogs are present.

Other Comments: The development of a Landowner Wildlife Management Association with adjacent and neighboring landowners will greatly enhance any management that you apply to your ranch, and is strongly encouraged. TPWD and TCE personnel are available to assist in this endeavor.

Appendix K

Guidelines for Native Grassland Restoration Projects

by
Jim Dillard, Technical Guidance Biologist
Texas Parks and Wildlife Department, Mineral Wells

INTRODUCTION

Native grasslands and prairies, with their ecologically complex plant and animal communities, were an important component on the landscape of early Texas. They were dominant features on the landscape in the Edwards Plateau, Cross Timbers and Prairies, Coastal Plains, High Plains, and Lower Rolling Plains. They contributed significantly to forage production for livestock grazing and habitat for a wide variety of wildlife species. Most of the native prairies found in the Blackland Prairie and Coastal Prairie Regions of Texas have been depleted. Only isolated relic native prairies sites remain. Native prairies were also found within most of the other ecological regions of the state where adaptable soils site occurred. Soil that once supported these vast plant communities of native perennial grasses and forbs now maintain a thriving farming economy. Most of these lands are now devoted to the production of wheat, milo, corn, cotton, hay, improved pastures, and an array of other cash crops to meet our demands for food and fiber.

It is not possible to totally replicate the native grasslands and prairies that once existed in the different ecological regions of Texas. These guidelines, however, represent basic and fundamental techniques and procedures that should be addressed when attempting to restore or reconstruct range sites to resemble native prairie plant communities in Texas. Only with time can land truly evolve through the stages of natural plant succession to replicate the diverse flora and fauna characteristic of climax native prairies. There are land management steps that can be taken to speed up this process by reintroducing native plants or their cultivars on those lands that once supported native grasslands and prairies. Texas Parks and Wildlife Department recognizes the importance of native prairies and grasslands and their function as habitat for many wildlife species including native and migratory birds, small and large mammals, reptiles and amphibians, insects, and invertebrates. Each ecological region will require different techniques, planting procedures, species selections, and site preparations to be successful. It will be imperative that a coordinated effort be made to draw upon the expertise of other agencies and groups with knowledge and training on native grassland and prairie restoration before undertaking a restoration project. Agencies such as the United States Department of Agriculture Natural Resources Conservation Service (NRCS), Texas Agricultural Extension Service, Soil and Water Conservation Districts, Native Prairies Association of Texas, Texas Parks and Wildlife Department, United States Forest Service, and universities are logical sources of information concerning the specifics to formulate grassland and prairie restoration plans. Many of these organizations have identified successful techniques and procedures through research

and demonstration projects in different parts of Texas. No plan should be considered complete that has not taken into consideration the experience and knowledge already available from such sources.

The following outline covers most of the major elements that should be addressed in a grassland restoration plan. Many variables in techniques are possible and may be considered adequate if supporting evidence is presented to justify the approach to grassland and prairie restoration. As each site will be different, every effort should be made to identify specific techniques or steps that are applicable to each site.

GRASS SPECIES

Native grasslands/prairies are diverse plant communities where 50 to 90 percent of the vegetation is grasses. They are the basic framework of the site and are associated with a wide variety of forbs or other plants. The more individual grass species planted, the better. However, initiation of a restoration project can include the initial planting of as few as four species for the site. Grasses planted, if from commercial seed sources, should be climax grass species for the ecological region of the state being considered and adapted to the soils found on the site. Sites may be suited to tall, mid-, or short grass species, depending on individual site classification or soil type. It may be necessary to plant different grass species on different locations of the site due to differences in soil type, moisture retention properties of the soil, PH considerations, or other microhabitat factors.

Selection of individual grass species to plant should be based on information obtained from the local NRCS or Soil and Water Conservation District (SWCD) office or other recognized source with knowledge about climax grass species of the area. Their range site descriptions will also be useful. Seed sources should be from within 300 miles of the site or nearer to assure adaptability and improve success of initial establishment. Grass seed will have a PLS (pure live seed) or germination rating which should be checked - the higher the better. Many commercial seed companies also will mix seed on request when ordering. Seed should be clean to improve flow through grass seed drills during planting. Soil type is also a factor to be considered when selecting grass species to plant.

FORB SPECIES

Forbs or broadleaf herbaceous plants represent a major component of native grasslands/prairies and may be seasonally co-dominant. Annual and perennial species are found in native prairies and are responsible for the majority of species diversity. Planning native grassland/prairie projects should also incorporate initial introduction of a selected number of forb species. A plan should provide for the planting of at least four perennial species from the ecological region and adapted to the site. Range site descriptions and climax vegetation check list from the local NRCS or other recognized source should be reviewed. The planting of additional species of annual and perennial species is encouraged as the site develops over time.

Annual forb species should not be introduced on the site until planted grass species become established. Establishment of grasses may require periodic mowing, at least initially, and will make establishment of annual forbs difficult. Most sites will produce annual forbs and some perennials from existing seed banks in the soil. Annual forb diversity will increase over time. Annual forbs should not be planted during the first two years of the project.

A listing of seed sources for native grasses and forbs is also available from the National Wildflower Research Center in Austin. When ordering seed from any commercial seed dealer, always ask about the source of the seed your want. Be selective and shop around for seed availability when you will need it and the price you are willing to pay.

Native grasslands/prairies may also be reestablished using cut seed hay from an existing native prairie site. Seed can also be combined from an existing stand of native grassland. Techniques for planting seed obtained by these methods will be discussed. Annual forb seeds may also be collected by hand, stored to dry, and planted on selected sites throughout the life of the restoration project to improve plant diversity.

SITE PREPARATION

Site preparation is perhaps the most important element to be addressed in planning a native grassland/prairie restoration project. The initial success of plantings will often be dependent on those steps taken to reduce weed competition, provide a suitable seedbed, and promote growth of seedlings. Competition by cool-season grasses and weeds will make initial establishment of native grass plants difficult and require site management. Many of these plants are alien species and are undesirable in the completed project.

As each site will be different, an evaluation should be made to determine what existing vegetation complex is present and what steps will be necessary to set back plant succession so species planted can germinate and grow. It is important to determine the history of the site including past land use, crops grown, species of improved grasses planted, cultivation or other mechanical soil disturbances, herbicides used, etc. A check with the local NRCS or Farm Service Agency (FSA) office will be helpful. Aerial and topographic maps will help you evaluate the site to determine important features such as drainages, slope, or other physical features important in planning the restoration project. County soil maps should be closely reviewed during the early planning stages to determine soil types and adaptability of grass and forb species to be planted on the site.

One approach to grassland/prairie restoration is to plant forbs initially during the first fall period of the project and grasses during the late winter months of the following year. For a fall planting of forbs during October, the site must be prepared well in advance. Mowing and periodic light disking during the spring and summer months prior to planting will help set back germination and establishment of existing weeds and grasses.

Shallow disking is recommended to avoid stimulating the existing dormant weed seed bank in the soil. Several diskings will be required initially and again just prior to planting. Application of an approved herbicide such as Roundup may be necessary on some sites prior to planting to control vegetation regrowth or undesirable species such as Johnsongrass, coastal bermudagrass, or cockleburs. A year's lead time is preferred for initial site preparation. Fire may also be used in initial site preparation to reduce rank vegetation.

A cover crop such as Haygrazer or other sorghum varieties may be planted on some sites to be restored during the summer, harvested in the fall, and the remaining stubble used to stabilize the soil surface for planting with grass seed drills. Not all sites require such plantings, depending on the individual site and strategy being used to establish grass and forbs. This technique reduces soil erosion by wind and water and may be necessary on some sites. Stubble should be left to a height of at least four inches.

Soil preparation specifications and guidelines for specific soil types and range classifications have been developed by the NRCS and are available at local SWCD offices.

PLANTING

Preferred planting dates for perennial forb seed is during the fall, particularly the October-November period. Although most perennial forb species will not germinate until the spring, it is necessary that they undergo the chilling and softening process in the soil. Forb seeds may be planted with mechanical seed drills or broadcast spreaders, hand-carried seeders, broadcast by hand, or be mixed and incorporated with grass seeds during the grass planting process. Most forb seeds require shallow planting depths into a firm seed bed. Forbs should not be planted earlier than the first freeze of the fall. Planting date information is also available from commercial seed dealers who provide recommendations for seed they sell. Planting dates will also vary, depending on what part of the state the site is located in. Native grass seed should be planted in Texas between January and April. Dry conditions during this period may substantially influence germination and growth of grass seedlings.

Seeding rates of commercial seed are available from the dealer. Seeding rate information for soil and range sites are also available from the local Natural Resources Conservation Service office. Seeding rate recommendations for pure stands of individual grass species may require adjustment to allow for planting of multiple species or mixes. Generally, a generous seeding rate for native grass species will improve the odds for a good stand the first year. Seeding rates will depend on the number of individual species being planted, type of equipment, and proportion of species desired in the final stand.

There are several types of equipment that are effective for planting grass seed. Grass drills are probably the best equipment and have greater reliability in establishing a stand. Grass drills are often available for use from local SWCD offices. Also,

commercial contract farmers who specialize in grass plantings normally have this type of equipment. Common brand names are Tye, Nesbitt, John Deere, and Turax. Cultipackers are also used and consist of a seed box and roller system to pack seed into the ground. Seeds may also be planted by a fertilizer spreader followed by a harrow to work seed into the soil. Hand-held broadcast spreaders or those operated by small all terrain vehicles may also be used.

Seed hay taken from a native prairie site can be scattered over prepared ground by hand from a trailer, followed by a light harrowing to incorporate it into the soil. Prairie hay bales may be available and are easily stored. Such plantings should be done in the fall following the harvest of native seed hay. This method is not reliable because there is no guarantee that viable seeds have been produced and that germination will occur. Although native grasses may appear to have good seed production, only by conducting a germination test will you know if live seed are present and establishment of seedlings is likely.

Fertilization is optional during the initial planting of native grasses and forbs. It may serve to promote the growth of undesirable forbs and annual grasses and slow establishment of the desired species planted. Fertilization rates can be determined by soil analysis tests or based on recommendations from the NRCS or Texas Agricultural Extension Service.

Forb seed purchased from seed dealers should be specified as native, not domesticated seed. Mixes are generally not recommended unless they contain a desired species composition adapted to the region and are those species you want. Individual species plantings are preferred. One approach to seeding forbs is to mass plant a variety of adaptable species and let the site, through the process of natural selection, determine where certain species will do best. A continuing effort should be made by the landowner to introduce additional forb species to the site as the project progresses over time.

SITE MANAGEMENT

During the first year, growth of grass seedlings and perennial forbs may not appear impressive. Most growth of these plants will be below ground in the development of root systems. Annual weeds and other on-site grasses will respond to soil disturbances associated with initial planting operations. Mowing will be necessary during the first two years. Restoration sites should be mowed to a height of no less than 4 inches to reduce competition from annual weeds and undesirable grasses. It will also serve to reduce moisture loss from the soil. It may take 2 to 3 years growing time for native grasses to dominate the site vegetatively. Perennial forbs should respond sooner and become established along with annuals. Timing for mowing will have to be determined on-site and will require regular attention by the landowner.

Grazing is not recommended during the first three years. If vigorous growth of planted grass species does occur during this time, limited grazing during the dormant season

may be possible. After three years, grazing may be incorporated into the management plan for the site by grazing during the growing season under a rest and rotation system. Grazing is not required for grassland/native prairie restoration projects, rather it should be used as a tool in their management.

Control burning is also a tool that can be used for site management. No burning should be conducted during the first three years after grasses have been planted. After that time, if the site has developed sufficiently and forage and thatch becomes excessive, burning on 3 to 4 year rotation can be initiated. Fire is a natural event for grasslands and prairies which benefit from its occurrence. Burning will stimulate growth of dormant forb seed, promote growth of above ground vegetation, improve soil fertility, and help control the invasion of undesirable woody plant species found in the area. Fire releases nutrients back into the soil and reduces shading of new grass and forb seedlings. Many new species will also germinate from the existing soil seed bank. Winter burns benefit warm-season dominant plants, whereas summer burns promote growth of cool-season plants. Depending on individual site management strategies, the use of prescribed burning, mowing, and grazing will be the primary tools available for site management of grassland/prairie restoration projects.

LITERATURE CITED

Recreating A Prairie. National Wildflower Research Center, Austin, Texas.

A Guide For Re-Creating Your Own Prairie. The Prairie Dog, Newsletter of the Native Prairies Association of Texas

Wildflower Meadow Gardening. National Wildflower Research Center, Austin, Texas.

Burleson, Bob and Micky. Homegrown Prairies. Reprint. The Prairie Dog, Newsletter of the Native Prairies Association of Texas.

Native Plant and Seed Sources of Texas and Oklahoma. National Wildflower Research Center, Austin, Texas.

SUGGESTED INFORMATION SOURCES

USDA Natural Resources Conservation Service (local)
Soil and Water Conservation Districts (local)
Native Prairies Association of Texas
3503 Lafayette Avenue, Austin, TX 78722-1807
Texas Parks and Wildlife Department
4200 Smith School Rd., Austin, TX 78744
National Wildflower Research Center
2600 FM 973 North, Austin, TX 78725
Plant Materials Center, NRCS, Knox City, TX
The Nature Conservancy of Texas
P.O. Box 1440, San Antonio, TX 78295
Texas Agricultural Extension Service (local)
Native Plant Society
USDA Farm Service Agency (FSA) (local)
USDA US Forest Service
USDA US Fish and Wildlife Service
Texas A&M University/College Station
Texas Tech University/Lubbock
Texas A&M University/Kingsville
Southwest Texas State University/San Marcos
Sul Ross State University/Alpine
East Texas State University/Nacogdoches
Other Universities

Appendix L

Conducting White-tailed Deer Spotlight Surveys in Central Texas

by
Steve Jester, Wildlife Biologist, Decatur
Jim Dillard, Technical Guidance Biologist, Mineral Wells

This brief overview of the **deer spotlight survey** is designed to answer some of the most commonly asked questions about this method for censusing white-tailed deer and its application in central. A deer spotlight survey is only one part of a comprehensive deer management program that must also include proper habitat management, harvest management, and record keeping. Why a deer census is needed, what it will and will not tell you, the type of equipment necessary for conducting spotlight surveys, and how to interpret data collected will be discussed.

There are some limitations to using spotlight census for estimating densities of white-tailed deer in central Texas. Spotlight surveys have limited application on small tracts of land or where dense vegetation such as juniper or oaks greatly reduces visibility. Land holdings of 1,000 acres or greater offer better potential for application of this sampling technique. Spotlight surveys are not designed to observe a total deer population, rather to sample a representative portion of habitat and the number of deer found there.

What is a deer spotlight survey? A deer spotlight survey is a method of sampling a given area of land and the density of deer found there. Area is expressed as the number of **visible acres** which is determined by taking a series of visibility readings along the designated route at 10th mile intervals. Data collected on a deer spotlight survey is express as the number of **acres per deer**. Multiple counts are required on the repeatable route for reliable information on deer density.

Why do I need to know about estimated deer density and herd composition? Estimates of deer density and habitat surveys can help determine whether your deer herd is at, above or below carrying capacity of the habitat. Deer **carrying capacity** is the density of healthy and productive deer the land can support without causing habitat damage. A knowledge of the deer density and herd composition is necessary to regulate annual deer harvest (how many bucks or does to harvest). Daylight herd composition counts may be used in conjunction with spotlight census data to more accurately estimate percentages of bucks, does, and fawns in the deer herd. The spotlight census also enables landowners to monitor progress of habitat and harvest strategies in reaching specific deer management goals and objectives.

Where do I set up my deer census line? Select all-weather roads that go through a variety of habitat types. Avoid roads that frequently wash out or become impassable following heavy rain. The transect should sample different habitat types in proportion to number of acres they represent on the property. Avoid roads by feeders or food plots where deer may be concentrated. Spotlight surveys conducted during August and September are less likely to be influenced by seasonal environmental factors, food

distribution, acorn-drop, or other biological events affecting deer. On large tracts, more than one route may be required to adequately sample a ranch. **Make a map of the route(s) for future reference.**

How do I set up my line and determine visible acres? Once a route has been selected, an estimate of the number of visible acres along the route must be determined. During the summer months and prior to the first official count, drive the route at night with two observers on the back of the vehicle. Using the same type of spotlight you will use to count deer, have the driver stop every **1/10 mile**. The observers estimate how far they can see a deer (or where the brush becomes too thick to see deer) in a straight line perpendicular to the truck **(left 150 yards and right 50 yards, etc.)** up to maximum of 250 yards from the road. A visibility estimate is also needed at the start point of the line. Visibility estimates made on census routes 12 miles long or greater can be taken ever **2/10 mile.** Visibility readings may be recorded on a form or tape recorded for later tabulation. This process is repeated for the length of the route. On dead-end roads, record visibilities only going down the road and resume taking visibilities when a new portion of the route is begun. When conducting additional counts on the same census route, it is **not** necessary to retake visibilities. Visibility estimates may be used for several years unless significant changes in vegetation has occurred along the route. The following formula is used to convert 1/10 mile visibility estimates into **acres of visibility:**

Total yards of visibilities / number of 1/10mile stops +1 X Number of miles X 1,760 / 4,840 = Visible Acres

For a 7.7 mile line with 4,744 total yards of visibility the formula would be:

4,744 / 77 + 1 X 7.7 X 1,760 / 4,840 = <u>170.29 ac</u>.

When do I conduct deer spotlight counts? In central Texas, spotlight surveys should be conducted during the months of August, September and early October. Deer are generally well distributed in their home ranges during this period of the year and are more easily identified by sex and age-class (fawns). Each route should be counted 3-4 times to improve reliability of the data. Do not conduct surveys during rain, high wind or following significant disturbance along the route during the day of the count (working cattle, construction, seismograph work, etc.) Begin all counts one hour after official sunset. Contact the local Texas Parks and Wildlife Department game warden prior to conducting spotlight surveys. Also, notify neighbors or adjoining landowners who might see the lights to alert them about your activity.

What equipment do I need to make a deer survey? Pickup trucks (4-wheel drive may be required) are preferred over sport utility vehicles or cars. Use a 25 ft. piece of 12 gauge insulated woven wire with two "alligator" clips on one end and a two-plug outdoor type outlet box on the other. Replace the cigarette lighter plug on the spotlight cords with a standard male plug. Attach the alligator clips to the positive and negative poles of the vehicle battery and plug the light into the outlet box. Other wiring systems

can also be used. Use 100,000 candlepower tractor or utility bulbs and avoid using Q-beam-type lights, which are heavy, produce excessive glare, and can quickly drain a battery. Other necessary equipment includes clipboard or tape recorder, **binoculars,** and a pencil.

How do I conduct the survey? Drive the route 5 to 8 mph. In open terrain where visibility permits, speed may be increased to 10-12 mph. Stop only to identify deer or determine the number of deer in a group. Unless all deer observed in a group can be identified by sex and age-class, record **ALL** these deer as unidentified. Recording only bucks from a group will bias data and reflect a better buck to doe ratio than may be present. Record deer as **bucks, does, fawns,** or **unidentified.** Deer are usually first spotted by their reflective eyes. Deer eye reflection is greenish-white. Other wildlife, birds, fence posts, and livestock are often mistaken for deer. It is **imperative** that binoculars be used to identify **all** deer observed. Keep the lights moving as the truck moves, checking both ahead of and behind the vehicle. The observer on each side of the vehicle shines only his/her side to prevent blinding the other observer. Deer observed over 250 yds. from the vehicle should **not** be recorded.

How do I interpret the spotlight census data? Divide the **total number of deer** into the **total number of visible acres** observed to determine the number of **acres per deer** on the route. For example: **1,260 acres** (one spotlight survey route counted 3 times with 420 acres of visibility) divided by **90** (total number of deer observed on one spotlight survey route counted 3 times) = **one deer per 14.00 acres.** The estimated deer population for the ranch can then be estimated by dividing the total acres of the ranch by the estimated acres per deer figure. For example, the deer **population estimate** for a **5,000** acres ranch with a deer density of one deer per **14.00** acres is **357 total deer.** An **estimate** of the number of bucks, does, and fawns in the population may then be determined by multiplying the **total number of deer** by the **percent** of all deer identified that were bucks, does, and fawns. For example:

357 Deer X 0.20 (% identified as bucks) =	71 bucks
357 Deer X 0.50 (% identified as does) =	179 does
357 Deer X 0.30 (% identified as fawns) =	107 fawns
TOTAL =	**357 deer**

In addition, deer identified as bucks, does, and fawns from spotlight surveys combined with daylight herd composition counts will provide important information on the buck to doe and fawn to doe ratios. These ratios are important population parameters of you deer herd that allow you to measure the success of your management program.

For example: 179 does / 71 bucks = 2.52 does per buck

107 fawns / 179 does = 0.59 fawns per doe

How can Texas Parks and Wildlife Department help me? On written request, department wildlife biologists and technicians provide technical assistance to landowners on wildlife and habitat management planning, including establishing deer management programs and deer spotlight surveys. Under the Private Lands

Enhancement Program, department personnel are available to assist landowners with setting up and conducting an initial spotlight survey. In addition, assistance is available for interpreting census data collected by landowners and with formulating harvest recommendations based on that information. Literature and data forms are available on request. For assistance, contact Texas Parks and Wildlife Department, Wildlife Division, 301 Main Street, Suite D, Brownwood, TX 76801 or your local Texas Parks and Wildlife Department wildlife biologist.

Appendix M

Herd Composition: An Essential Element of White-tailed Deer Population and Harvest Management in Central Texas

by
Jim Dillard, Technical Guidance Biologist (Retired)
Texas Parks & Wildlife Department, Mineral Wells

INTRODUCTION

White-tailed deer management consists of a series of strategies, practices, and other actions taken on the part of landowners and land managers to produce and sustain populations of this important game animal. **Habitat management**, **population management**, and **harvest management** are all essential ingredients for accomplishing a successful white-tailed deer management program. It is the degree of importance that landowners or wildlife managers place on these different stages of management that will determine long term results. Knowledge of the composition of a deer herd is fundamental to making sound management decisions.

Herd Composition - What Is It?

Herd composition refers to the **ratio of bucks, does, and fawns in the population.** In addition, the ratio of does to bucks and fawns to does are also key population relationships used to implement and evaluate management and harvest strategies. An estimate of the **percent bucks, does, and fawns** in the total population is one of the most important factors that must be known before harvest rates can be formulated.

Deer are born at approximately a one-to-one sex ratio; however, few free ranging populations reflect this ratio. Herd composition is not static but changes throughout the year due to the cumulative influences of hunting pressure, reproduction, natural mortality (diseases, accidents, predation, etc.), range conditions and land use, and environmental factors such as rainfall patterns, temperatures, drought, or floods.

Although the exact number of deer living on most ranches is impossible to determine, various techniques are available that estimate their numbers. Techniques such as spotlight surveys, walking Hahn transects, mobile daytime census, and aerial counts are common methods used to estimate the relative density of deer. With each of these techniques, deer are counted on a given area of space or acreage. The number of deer observed divided by the number of acres sampled is expressed as **acres per deer.** An estimate of the total population can then be determined by expanding this figure to the total ranch acreage. For example, a 5,000 acre ranch with an estimated density of 25 acres per deer has an estimated total deer population of 200 deer. Unless a significant number of observed deer are identified as to sex and age class, estimated herd composition is unknown. In most situations, not enough deer are identified while conducting these types of surveys which must be supplemented by additional **herd composition counts.**

When Do You Conduct Herd Composition Counts?
Deer herd composition counts should be made during that time of the year when bucks, does, and fawns are most easily identifiable. The exact time of the year may vary across the state due to differences in fawning dates and antler formation on bucks. Counts initiated before peak fawning has occurred or prior to advanced antler formation will not provide data reflective of the population sex or age composition. Also, fawns are not actively up and moving with does until they are 6-8 weeks of age. It is recommended that herd composition counts in central Texas be conducted during **August and September**. The differential size between fawns and adult deer is most evident during this period. The spotted hair coat on fawns begins to disappear during late September when molt occurs, making identification difficult unless a mature size deer is nearby. Fawns also begin to grow rapidly by this time, making positive identification difficult. Early fawns may be misidentified as yearlings on counts made after this time. Antler development on bucks has also progressed during this period so that they too are readily identifiable.

Herd composition counts should also be completed by the end of September to allow time for harvest rates to be calculated and preparations made for the upcoming archery and general gun seasons.

How Do You Make Herd Composition Counts?
Herd compositions counts can be made any time of the day or night. However, since deer are most active during the **early morning and late evening**, efforts to observe deer during these periods are most productive. Identification of deer during daylight hour is also easier than night observations with spotlights and a higher percentage of deer can be identified. Most counts can be made from a slow moving vehicle along ranch roads. Counts can be made at random, along a systematic route, or at specific locations where deer are feeding or congregating. Grain fields, food plots, water sources, natural crossings, or tree lines are good places to observe deer. Counts may also be made from hunting blinds or other stationary structures where deer are known to occur. **The use of binoculars or spotting scopes is a must!**

Record **only** deer that can be identified as a buck, a doe, or a fawn. When a group of deer is observed, **do not** record **any** of the deer unless **all individuals** can be positively identified. If you see a deer but can not identify it - don't record it. Do not assume the identity of deer or counts will become biased. Fawns and mature bucks are usually easy to identify. Yearling bucks or spikes are often mistaken as does. Every effort must be made to be sure you properly identify all deer. Avoid recording the same individual deer on different dates if possible. Your objective is to observe a representative cross section of deer throughout the total population on your ranch.

Remember, many deer during this time of the year will still be in small family groups that may consist of a doe with this year's fawn or fawns, and her doe or buck yearling from the previous year. Other groups may consist of several does and their collective fawns. And, during August, bucks are often observed in groups away from the does. As September progresses, buck become less tolerant of each other and begin to be observed more as singles.

Take your time when you see a deer. Often, there are other deer standing nearby that you won't see unless the group begins to move or run. Fawns may be hidden in tall grass and not seen until the doe begins to move away. Be patient!

Data should be recorded on a simple form that has columns for the date, bucks, does, fawns, and total. When all herd composition observations are completed, simply add to total number of bucks, does, and fawns observed together. It is recommended that a minimum of **100** individual deer be identified if possible. **The more the better!**

How Do You Determine Herd Composition from the Data?
From your data sheet, **total** the columns for **bucks, does, and fawns** and **add them together**. This figure represents **total deer identified**. To determine estimated herd composition, **divide** each individual group (bucks, does, and fawns) by the **total identified deer figure**. For example, if a total of 100 deer were identified and 20 were bucks, 50 were does, and 30 were fawns, calculate herd composition as follows:

20 (# of identified Bucks) divided by 100 (total identified Deer) = .20 *x* 00 = **20% Bucks**
50 (# of identified Does) divided by 100 (total identified Deer) = .50 *x* 100 = **50% Does**
30 (# of identified Fawns) divided by 100 (total identified Deer) = .30 *x* 100 = **30% Fawns**
100 Total Identified Deer **100%**

In addition, **doe to buck** and **fawn to doe** ratios can also be determined. To determine the **<u>doe to</u> <u>buck ratio</u>**, **divide the number of identified does** *<u>by</u>* **the number of identified bucks**. To determine the **<u>fawn to doe ratio</u>, divide the number of identified fawns** *<u>by</u>* **the number of identified does:** For example:

Divide 50 (# identified Does) *<u>by</u>* 20 (# identified Bucks) = **2.50 Does per Buck**
Divide 30 (# identified Fawns) *<u>by</u>* 50 (# identified Does) = **0.60 Fawns per Doe**

How Do You Use Herd Composition Data?
Once you have estimated what your deer herd composition is and expressed it as **percent bucks, does, and fawns,** you may now apply these figures to your total estimated deer population. For example, a ranch containing 2,000 acres with an estimated deer density of one deer per 20 acres has an estimated population of 100 deer. Calculate herd composition as follows:

100 Total Deer	***X***	.20 percent (% identified Bucks)	=	**20 Bucks**
100 Total Deer	***X***	.50 percent (% identified Does)	=	**50 Does**
100 Total Deer	***X***	.30 percent (% identified Fawns)	=	**<u>30 Fawns</u>**
				100 Total Deer

With the knowledge of approximately how many bucks, does, and fawns are present on your ranch, you may now make important decisions about how many deer should be harvested during the upcoming deer season. Buck to doe ratios and fawns to doe ratio also are good indicators of your progress toward obtaining your goals and objectives.

Appendix N

Food Plots for White-tailed Deer in Central Texas

by
Jim Dillard, Technical Guidance Biologist (Retired)
Texas Parks & Wildlife Department, Mineral Wells

INTRODUCTION

Planting food plots for wildlife in Texas has long been used by landowners as a means to supplement the diets of wildlife during times of stress or during periods of the year when nutritional natural forage may be deficient or lacking in the environment. They are also used to concentrate wildlife species such as white-tailed deer or turkeys for hunting or viewing. There are many misconceptions about food plots and their role in wildlife and habitat management. Food plots should never be planted as a substitute for natural forage or to artificially increase populations of wildlife above the carrying capacity of the land. Planting food plots will not make up for improper range management, overgrazing by livestock, excessive stocking rates, low reproduction, or poor native habitat for white-tailed deer.

Annual food plots are expensive to develop and maintain and require a long-term commitment on the part of the landowner. Much research is still needed to document just what benefits wildlife derives from food plots. Will the economic investment in materials, equipment, seeds, fuel, and labor translate into a measurable return? Will the overall health of your white-tailed deer populations, the size of individual animals, antler development, or improved habitability of the land for deer result? In many situations, it will not. Landowners must weigh these and other considerations before undertaking development and planting of food plots for white-tailed deer. Once the decision has been made by a landowner to develop food plots, a comprehensive plan must be developed to address long-term goals and objectives. Food plots that are poorly planned, incorrectly planted or located in the wrong place will ultimately fail. The following guidelines are presented to assist landowners in central Texas who want to plant food plots for white-tailed deer with information about why, what, when, where, and how to plant them.

White-tailed Deer Habitat in the Cross Timbers: White-tailed deer habitat in central Texas is dominated by deciduous woods and brush. With the exception of live oak and juniper, green forage during the winter period is available only from winter forbs (broadleaf herbaceous plants), winter grasses, and small grain crops. Winter browse for white-tailed deer is unavailable in much of the region. Browse during the spring and summer; however, is abundant over most of the region. Forbs and mast (acorns, pecans, etc.) are important dietary component during other times of the year. Extremes in temperatures and unpredictable rainfall patterns often result in extended periods of drought, cold winters or hot summers. These periods of extremes may result in short supplies of forage during the spring and late summer-early fall period. To be effective, food plots should target these stress periods of the year. However, the saying "When

you need food plots - you can't grow them and when you don't need them - you can" is appropriate for central Texas.

Deer often adopt food sources within their home ranges that are planted as cultivated crops by landowners. Crops such as peanuts, wheat, oats, milo, sorghum, truck crops (fruit, watermelons, cantaloupes, peas, etc.) and vegetable gardens receive use when available. Multiple uses of these croplands by domestic livestock and wildlife is often compatible. Heavy use, on the other hand, may result in severe depredation by wildlife and become unacceptable to landowners.

Why plant food plots for deer? Planting food plots specifically for white-tailed deer in central Texas is an increasing practice today for many landowners and land managers. Food plots should be considered only as a "hedge" against the climatic extremes and their effect on native plants. White-tailed deer are selective feeders, preferring highly digestible foods. Deer feed within their home range and select specific plants that are palatable and highly nutritious. Deer will typically eat certain preferred native plants when they are available, even if food plots are present. Plant composition in their diet changes throughout the year depending on availability, stage of growth, palatability, and distribution. Deer in central Texas will benefit most from food plots during the spring and fall when their nutritional requirements are greatest. Food intake for deer increases during these times of the year as bucks are growing antlers and accumulating fat for the winter, does are nursing and weaning their young, and fawns are shifting their diet from milk to solid foods. If deer become totally dependent on food plots or supplemental feeding, serious problems are occurring in the habitat and deer or livestock numbers should be reduced.

Where deer are confined on high-fenced ranches, development of food plots should be strongly considered. In most cases, deer density levels will exceed the carrying capacity for the native range. Food plots will receive heavy use and will help provide nutritious forage throughout the year. Deer numbers should be reduced through a program of proper harvest management or native habitat degradation will occur.

What should I plant in a deer food plot in central Texas? Food plot plantings can be divided into several categories including warm season, cool season, annual or perennial plants, with each having different growth periods, management requirements, or nutritional benefits for white-tailed deer. Food plots must be designated as either warm season or cool season. A complete food plot program should have plots designated for both seasons of the year. Many of the cultivated **annual cool season forage plants** or grasses such as **oats, wheat, rye, and ryegrass** may be planted in **cool season food plots** for deer for availability during the late fall to early spring period. Crude protein content ranges from 15-20%. Studies have indicated that deer may consume oats more readily during the early winter and shift their preference to wheat later in the winter. Planting of both oats and wheat may be more beneficial than selecting one over the other. Most varieties of oats are not as cold-tolerant as some varieties of winter wheat.

As wheat and oat food plots mature during March and April, plants will receive limited grazing use by white-tailed deer. Other wildlife species such as turkey, quail, doves, songbirds, and small mammals will continue to feed on seeds that fall to the ground. Mature stands of wheat or oats may be lightly disked back into the soil to a depth of 1-1 1/2 inches following a good rainfall event during May or June for additional short-term grazing by white-tailed deer. Under good moist soil conditions, an additional month of grazing can be obtained from wheat or oat food plots before high summer temperatures kill these cool season plants.

Cool season varieties of clover and vetch (legumes) such as arrowleaf clover (Yuchi), rose clover (Overton R18), yellow blossom clover, sweetclover, hairy vetch, and Austrian winterpeas are also used by white-tailed deer. Legumes must be inoculated for good nodulation of plant roots and proper nitrogen fixation. With proper cultivation and management, many of these varieties are reseeding and can be managed for crops for several years without replanting. Late summer mowing and light cultivation of food plots planted to reseeding annuals will help increase soil contact by seeds and improve stands. Where possible, plant a variety of these forage plants in the same or separate food plots to extend use by deer and other wildlife species. Some landowners are also beginning to experiment with plantings of turnips and beets as winter forage for deer in central Texas.

Warm season annuals such as millets, milo and other sorghum varieties, and legumes (beans, cow pea varieties, blackeyed peas, singletary peas, Catjung peas, soybeans, and lablab) may be planted after April 15th to **warm season food plots** for white-tailed deer in central Texas. Varieties of dry land alfalfa, a warm season perennial legume (comes back from the roots each year) or other grazing type varieties of alfalfa may also be planted. Legumes have 20-30% protein content and fix nitrogen into the soil. Planting a variety of these forages will increase the success of a food plot program. A combination planting of 2/3 legumes and 1/3 grain sorghum is recommended for most warm season food plots.

Food plots may also be planted to **native perennial forb** species. Illinois bundleflower, Maximillian sunflower, bushsunflower, and Engelmanndaisy are eaten by white-tailed deer. These deep rooted native plants are adapted to relatively low rainfall and a variety of soil types found in central Texas. Combination plantings of these native perennial forbs is recommended. Engelmanndaisy is a cool season plant that should be planted in the late summer or early fall. It can also be interseeded into an existing stand using a no-till drill. To plant Illinois bundleflower, Maximillian sunflower, and bushsunflower, begin seedbed preparation the summer and fall prior to a scheduled spring planting. Literature is available from the Natural Resources Conservation Service on how to establish and manage these native perennial forbs. These and many other native plant seeds are now available from commercial seed companies.

When do I plant food plots for white-tailed deer in central Texas? Warm season planting of sorghum or legumes should be done in the early spring when soil temperatures rise and seeds will germinate. Planning for soil preparation activities well

in advance of anticipated planting dates is a must for successful food plots. When possible, warm season food plots should be **cultivated during late summer or early fall of the year <u>prior</u> to planting** by deep double-disking. Most plantings should be made after April 15th. Some varieties of peas can be planted into mid-summer if soil moisture is adequate for germination and plant growth. Fall planting of **cool season** annuals should be conducted during September and October when soil moisture is adequate and before soil temperatures begin to drop. Specific planting date information for selected forage plantings and locally adapted varieties is also available from seed dealers, local Texas AgriLife Extension Service county agents, or the Natural Resources Conservation Service (SCS).

Where should food plots be located and how many do I need? Food plots should be located near cover used by deer. Deer prefer to feed in areas where escape from predators or other disturbances can be achieved quickly. Placement of food plots should take into consideration the location of dense brush or other escape cover, the terrain or topographic features on the land, drainages or water courses, the distance from property lines, and the location of soil suitable for cultivation. First, look for any existing or previously cultivated fields for food plot development. Clearing new locations for food plots is expensive and may be cost prohibitive.

Knowledge of soil types is necessary in locating sites for food plots. Soils must be capable of growing plants you select for planting. Local soil map books are available from the Natural Resources Conservation Service to assist you in selecting good soil types for planting food plots. Be sure the crops you plant are compatible with the soil properties of pH, drainage, texture, permeability, available water capacity, and depth. Avoid cultivation of soils on slopes or those prone to water and wind erosion. Food plots should be located in areas accessible to the highest density of deer on the property. Well traveled deer trails, watering areas, and other high deer use areas will give you a clue about where to locate a food plot. Food plots located near surface water sources such as creeks, rivers, ponds and stock watering tanks may increase visitations by deer. Placement of food plots near the center of your property may influence seasonal movements of deer during the stress periods of the year.

The number and size of deer food plots planted depends on the size of the ranch, habitat type, deer density, capital investments and equipment, and your overall goals and objectives for habitat enhancement. Food plots can be as small as 1 acre and as large as 5-10 acres or more. Food plot acreage can range up to 10% of the total ranch acreage. Warm season food plots should be larger than cool season plots. Where deer densities are high, larger food plots may be required to provide enough forage for deer and in an amount sufficient to do them any good. A number of smaller plots distributed over a greater area may be desirable, but increased costs for fencing, plowing, and planting may result. Small food plots may also be devastated by deer during early growth stages of plants. Fencing sufficient to exclude livestock is often necessary. Deer can easily access food plots fenced with standard livestock fencing materials. Net wire fencing may exclude fawns and should be avoided. High fences may be required for some forage plants such as lablab to allow for initial establishment and growth.

Where feral hogs are present, it may be necessary to exclude them by using heavy-gauge cattle panels on the lower portion of fences around food plots. Hogs can also be trapped, hunted, or otherwise dispatched to reduce damage to food plot plantings.

Cool season annuals (wheat, oats, rye, etc.) can also be overseeded during the late fall into improved pastures containing species such as coastal bermudagrass by using a minimum-tillage drill and proper fertilization. This practice can be used in pastures where early haying is not likely or in those used strictly for grazing by livestock. Overseeding may reduce initial growth of improved grasses during the early spring. Grazing by livestock on overseeded pastures may also limit growth of winter annuals for use by wildlife. Adequate fencing to exclude livestock is required. Another option is to overseed strips of winter annuals adjacent to field border edges or brush lines. Deer and other wildlife species often feed near escape cover and along these "edges" within their home ranges.

How do I plant a deer food plot? Planting successful deer food plots requires using the right equipment, properly preparing the seed bed, controlling weeds, and getting a rain when you need it. The best source of information about how to plant can be obtained from local farmers and ranchers who have experience in crop production in your area. An understanding of the principals of dry land farming is imperative. Farming procedure information is also available from the NRCS and Texas Agricultural Extension Service.

There is no substitute for a good seedbed. The soil seedbed should be well cultivated, weed free, firm, moist, and fertilized. An initial deep plowing is recommended on land not formerly cultivated or that have been out of cultivation for an extended period of time. A soil test should be made prior to planting a food plot to determine the amount of fertilizer or other additives needed in the soil. Fertilizer improves palatability of plants and improves the odds that a good stand of your plantings will be established. Seeds should be planted at the proper depth according to planting specifications and with the proper equipment. Most food plots can be planted with seed drills or broadcast spreaders. Broadcast plantings should be followed by a roller or drag to insure contact with the soil to improve germination. Row or skip-row crop planting techniques should be used for some crops such as sorghum or lablab to allow for cultivation and weed control. Small seeds such as legumes and ryegrass should be planted no more than 1/4 to 1/2 inch deep. Larger seeds such as wheat, oats, peas, or beans are planted at 1 to 1 1/2 inch depths. Use of pre-emergent herbicides and cultivation may be required to get a good stand on some forage plantings.

Warm season food plots should be double-disked during the **late summer and early fall of the year <u>prior</u> to spring planting.** Lightly disk the food plot again 30-45 days prior to planting 1 to 1 1/2 inches deep to reduce weed growth and help accumulate soil moisture. A final light disking 1 - 1 1/2 inches deep just prior to planting will complete soil preparation.

Cool season food plots should be lightly disked 1 to 1 1/2 inches deep 30-45 days prior to a late summer or early fall planting date. Disk lightly again 1 to 1 1/2 inched deep just prior to planting.

Where can I get seeds for white-tailed deer food plots? Most of the forage crop seeds such as legumes, sorghum, clovers, and vetch are available form local seed dealers, farm and ranch stores, or feed stores located throughout the region. In the planning process, locate seed sources well in advance and shop around for the best price, seasonal availability, and quantities you require. Check seed bag tags for seed germination tests and the percent of pure live seed. Use locally adapted varieties, and where possible, obtain seeds produced in or close to the area where they will be planted. Costs of these varieties may be considerably lower than those magic seeds you read about in the magazines. Seeds produced in other states or from great distances away may not perform as well, regardless of advertising to the contrary. Check with the Natural Resources Conservation Service, Texas Agricultural Extension Service, or Texas Parks and Wildlife Department for the name and location of local seed dealers.

Deer Food Plots and Other Wildlife: Food plots planted specifically for white-tailed deer will also benefit other wildlife species in central Texas. Rio Grande turkeys will graze winter wheat during the winter months and eat seed heads of mature plants in the spring. Seeds from other warm and cool season plantings are also eaten by turkey, bobwhite quail, mourning doves, songbirds, small mammals, and a variety of other wildlife species. Large food plots may also provide short term grazing for livestock.

CONCLUSION

Planting food plots for white-tailed deer or any wildlife species is not a solution for deficiencies in the habitat or improper land management practices. In most cases, only marginal returns can be expected. In central Texas, food plots for white-tailed deer may provide nutritious forage during short periods of the year when climatic extremes occur. Lack of timely rainfall or adequate soil moisture may influence establishment of annual white-tailed deer food plots. If food plots are planted, both cool and warm season plots should be developed. Planting native perennial forbs may be cost effective over the long term. Proper planning and soil preparation are necessary to successfully grow food plots. Food plots should be located near cover and in areas frequently used by deer on good soil-type sites not subject to erosion. Fertilization increases palatability for plants. Overseeding improved pastures during the fall can provide forage for wildlife with minimum soil cultivation. Always use recommended equipment, seeding rates and planting depths instructions for selected plantings. Pray for rain!

Appendix O

Wildlife Watering Facilities

By

Jerry Turrentine, NRCS Biologist

USDA – Natural Resources Conservation Service

WILDLIFE WATERING FACILITIES DESIGNS AND DRAWINGS

Designs for wildlife watering facilities can be simple or very complex. A simple facility works well in many situations by more complex facilities are needed in some situations. Each situation needs to be evalluated and the proper facility recommended to the landuser. To assist in making recommendations and designing these facilities and to supplement the standard and specifications, this technical note outlines specific criteria for a number of facilities.

GENERAL GUIDELINES

1. Where livestock or larger wildlife species are present, the facilities should be fenced to provide proper protection. One example is shown in drawing number 16.
2. Plastic and PVC materials can be damaged by rodents and ultraviolet light. As little as possible of this material should be left accessible to rodents or sunlight.
3. In areas with hard winter freezes, some facilities can be damaged by hard freezes. Provisions should be made to drain or shut off water supply during these periods.
4. Proper maintenance of equipment will ensure adequate wildlife water and increase life of facilities. As with all equipment, facilities should be checked on a regular basis.
5. Algae growth can be a problem in many facilities. The less sunlight, the less algae growth problems will be encountered. As much as possible, the facility should be shaded. If algae growth becomes too bad, the facility may have to be drained and cleaned.

NON COST SHARE FACILITIES

A. PVC (over other flexible type) Pipe Facility (Drawing #1)

1. Materials:
   7 feet of 2 inch or larger PVC pipe
   1 end plug to fit PVC pipe
   1 sink trap to fit PVC pipe
   1 six foot steel T post
   2 four inch hose clamps.
2. Construction and Installation:
   Cut off I inch of the open end of sink trap. Glue end plug and sink trap to PVC pipe. To fill, turn upside down and fill through sink trap. After filling, use hose clamps to fasten PVC pipe to T post. If larger PVC pipe is used, it can be necked down to 2 inch sink trap. A s inch PVC will hold 1 gallon, and a 4 inch will hold 4 gallons.

B. Drum with facet or Float (Drawing #2 and #3)

1. Materials:
   1 drum (can use metal or plastic).
   1 facet or float valve
   1 stand (metal or wood)
   18 inches of ¼ inch hose
   1 metal or concrete trough (Should be at least 6” x 6” x 4” deep)

2. Construction and Installation:
   Stand should be constructed so as to hold weight of filled drum. Stand should be leveled when installed. Insure that drum did not contain toxic material or is rusted wither inside or outside. If float valve is used, insure that trough is firmly installed and leveled. Most drums hold about 50 gallons.

B. Small Game Guzzler (Drawing #4)

1. Materials:
   3 sheets corrugated galvanized metal (at least 10 feet long)
   8 feet minimum of 6 inch PVC (over other flexible) pipe
   2 six inch PVC caps or end plugs
   11 feet of 4 inch post
   11 feet of 2x4 inch lumber
   30 one inch sheet metal screws
   30 sixteen penny nails

2. Construction and Installation:
   Three posts should be cut 2.5 feet in length and 3 posts cut 1.5 feet in length. Set post level in ground at 1 foot depth. The front post should be 6 inches lower than back post. Nail a 2x4 to top of back post and one to top of front post. Attach sheet metal together, making sure it is square, and attach to 2x4's. Cut a slot 1 inch wide, the same length as width of assembled sheet metal, out of PVC. Make sure the slot is centered in PVC. Six inches from each end of PVC, cut a 6 inch by 3 inch wide slot on the opposite side of the long slot. Install end plugs or caps.

   Dig out soil at lower end of sheet metal. Install and level PVC in dug out area with sheet metal inserted into 1 inch slot. Metal should extend into PVC at least 2 inches. Put enough soil around PVC to ensure that it is stable.

   A 0.3 inch rain will fill the PVC, and PVC will hold 12.5 gallons.

C. Windmill Supply Pie Dripper (Drawing #6)

1. Materials:
   3 feet of metal or PVC (over other flexible) pipe (should be ½ inch larger in diameter than water supply pipe)
   1 cloth or sponge bushing
   1 metal or concrete trough

2. Construction and Installation:
   Slip metal or PVC pipe sleeve over water supply line. Wedge cloth or sponge bushing between the two pipes. Make sure water discharge will enter trough. The rate of water flow can be regulated by sliding sleeve up or down water supply pipe. Area of pipe and trough should be protected from livestock.

D. Plastic Container (Drawing #13)

1. Materials:

1 plastic or metal container (smallest size should be 5 gallons)
1 commercial spring operated chicken watering bowl
2 cement blocks or 6 bricks

2. Construction and Installation:
   Install watering bowl to bottom of watering container. Set facility on blocks or bricks at a height that allows target wildlife species to utilize. Make sure facility is level.

COST SHAREABLE FACILITIES

A. In Ground Bowl Trough (Drawings #7, #8, #12, #14, and #16)
Storage Trough:

1. Trough Material: Concrete will be at least 5 sack cement mix. Concrete will be reinforced using 6" x 6" welded wire. Metal trough using pipe should meet criteria for pipe material listed below under heading "Pipe Material". If the trough is constructed of sheet metal it should be new and at least 12 gauge.

2. Trough Size: Concrete troughs for upland game birds should be at least 1 foot by 4 inches deep at the center (will hold 2 gallons). Concrete troughs for big game should be at least 1.5 foot by 6 inches deep at the center (will hold 6.5 gallons). Metal troughs for upland game birds should be at least 4 inch pipe, 3 feet long (will hold 2 gallons). Metal troughs for big game should be at least 6 inch pipe, 5 feet long (will hold 6.5 gallons).

Pipe and Pipeline:

1. Pipe Material: May use existing pipeline or new pipeline and either used shall be at least ¾ inch diameter and can be galvanized steel, aluminum or plastic complying with the following specifications:

Steel A-120 (galvanized)
ABS D-1527 (sch. 40 or 80)
PE D-2239 (SIRD-PR)
PE D-3035 (SRD-PR)
PVC D-2241 (SDR-PR)
PE D-2247 (Sch. 40 or 80)
ABS D-2282 (SDR-PR)
PE D-2104 (Sch. 40)
PE D-2737 (PE Tubing-PR)
PVC D-1785 (Sch. 40, 80, or 120)
PVC D-2740 (PVC Tubing – PR)

Additional Requirements:
If a facet is used it shall be new and shall meet or exceed pipe used. After water volume is set the handle should be removed. If a float is used it should be new and of good quality. If a drip emitter is used it should have the capability of being cleaned out.

Metal pipe trough will be anchored by use of concrete or metal legs buried in the ground at least 18 inches.

B. Big Game Guzzler (Drawing #9)

For specifications to big game guzzler, see supplement to standard and specifications for wildlife watering facility.

C. Inverted Umbrella Guzzler (Drawing #10)

This facility is commercially produced. It is available in 2000 to 5000 gallon sizes. The basin diameters are 16 to 32 feet. It takes 8 inches annual rainfall for 2000 to 3000 gallon size and 10 inches for the 5000 gallon size. No float needed if trough and tank set at same level.

D. Flying Saucer Guzzler (Drawing #11)

This facility is commercially produced. It is available in 200 to 2100 gallon sizes. It takes 6 inches annual rainfall for 200 gallon size, 8 inches for 1000 gallon size and 17 inches for 2100 gallon size. No float needed if trough and tank set at same level.

E. Ranch Specialties Wildlife Waterer (Drawing #15)

This facility is commercially produced. It holds 9.5 gallons of water. The float is built into the facility. The facility is 42 inches by 42 inches and 7.5 inches deep with a 3 foot diameter bowl. To be eligible for cost share, the facility must be connected to a permanent water source.

WILDLIFE WATERING FACILITIES

SCALE: 3/8" = 1'

SCALE: 3/4" = 1'

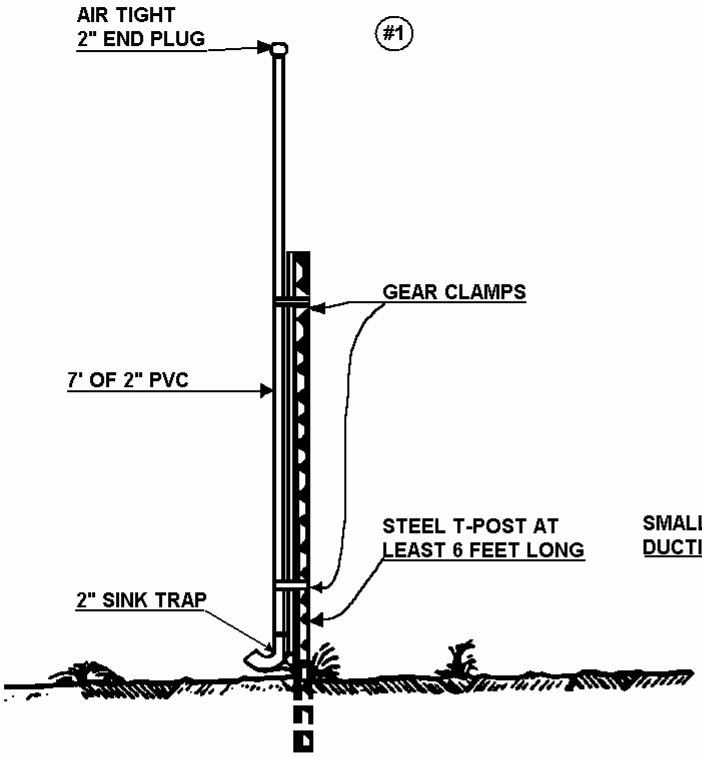

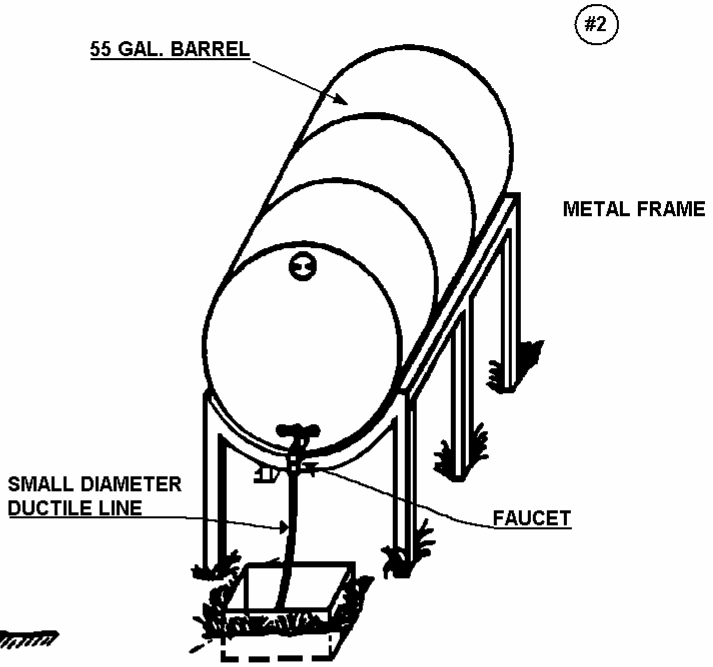

SCALE: 3/4" = 1'

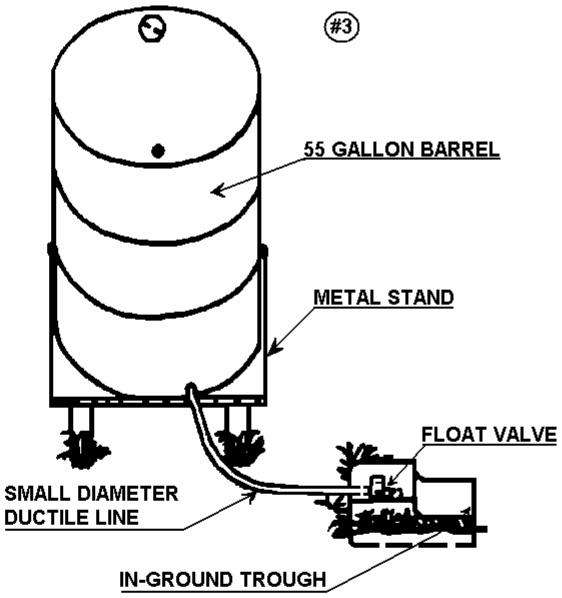

SCALE: 1/4" = 1'

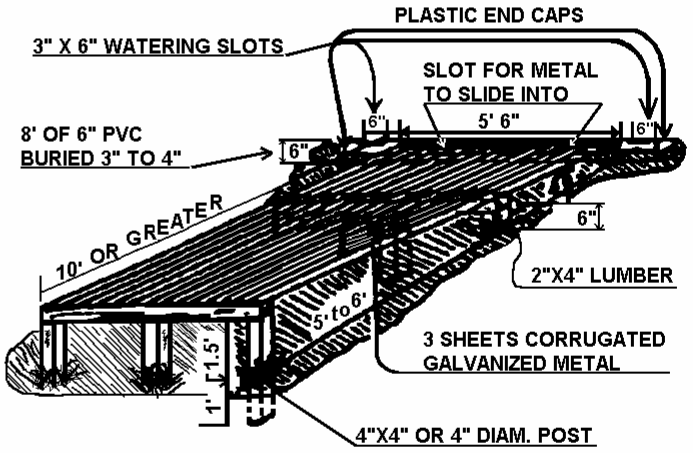

DRAWINGS BY TODD A. MAREK
SEPT. 1991

WILDLIFE WATERING FACILITIES

3 METHODS OF ANCHORING ON-THE-GROUND CATCHMENTS

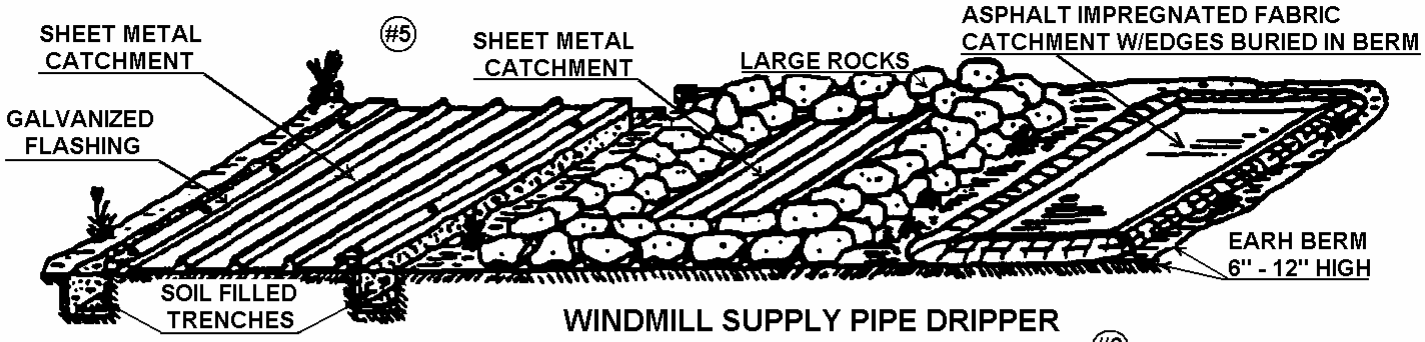

WINDMILL SUPPLY PIPE DRIPPER

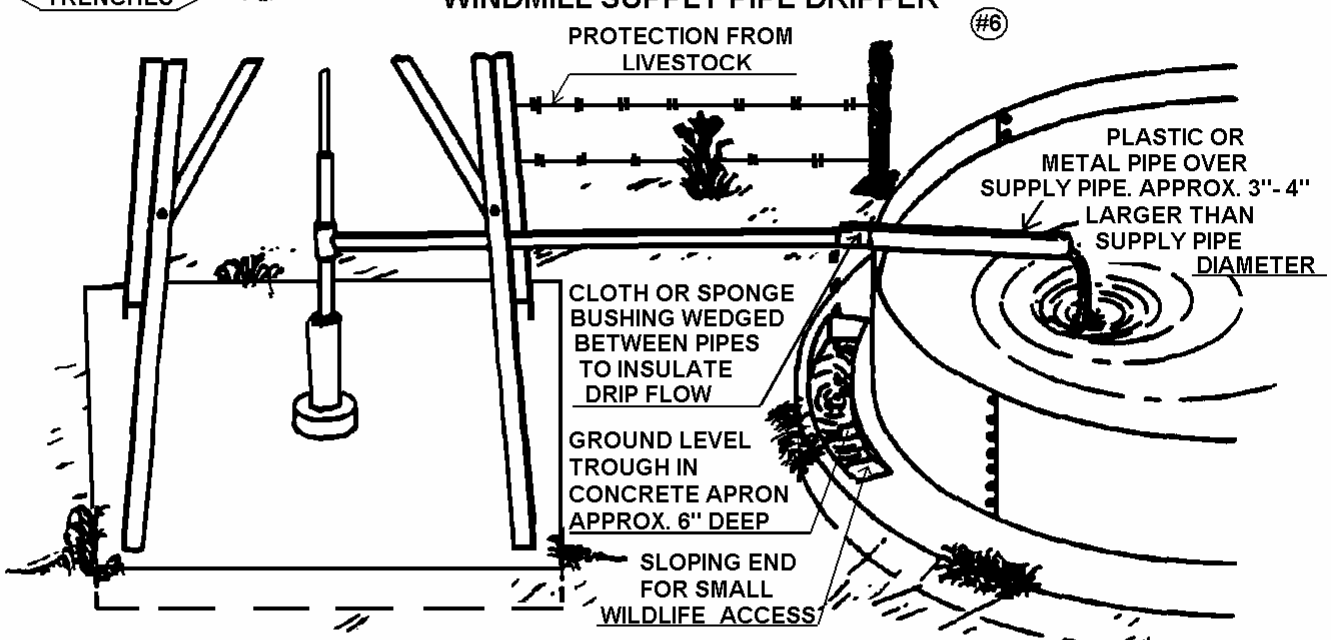

IN-GROUND BOWL TROUGHS

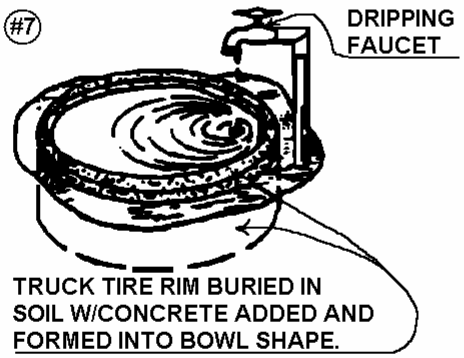

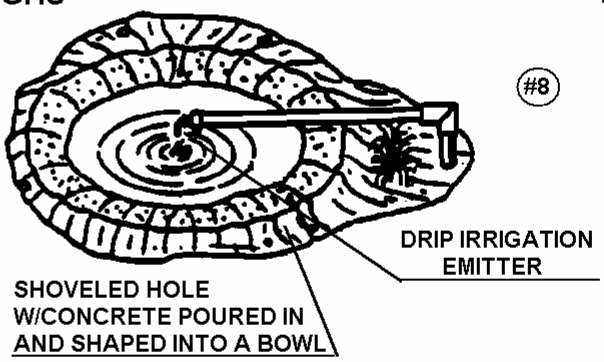

DRAWINGS BY TODD A. MAREK SEPT 1991

WILDLIFE WATERING FACILITIES

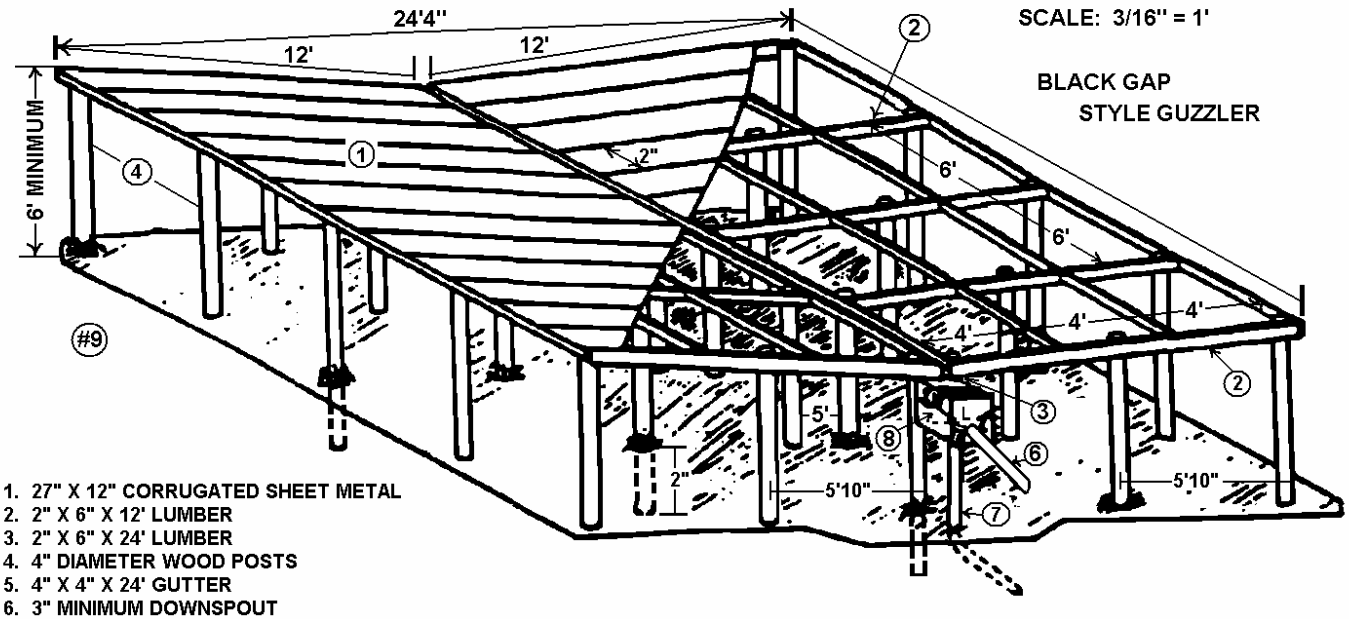

1. 27" X 12" CORRUGATED SHEET METAL
2. 2" X 6" X 12' LUMBER
3. 2" X 6" X 24' LUMBER
4. 4" DIAMETER WOOD POSTS
5. 4" X 4" X 24' GUTTER
6. 3" MINIMUM DOWNSPOUT
7. ALTERNATE DIRECTION FOR DOWNSPOUT
8. 1'6" X 1'6" X 1' SUMP COVERED WITH 1/4" - 1/2" HARDWARE CLOTH

INVERTED UMBRELLA GUZZLER

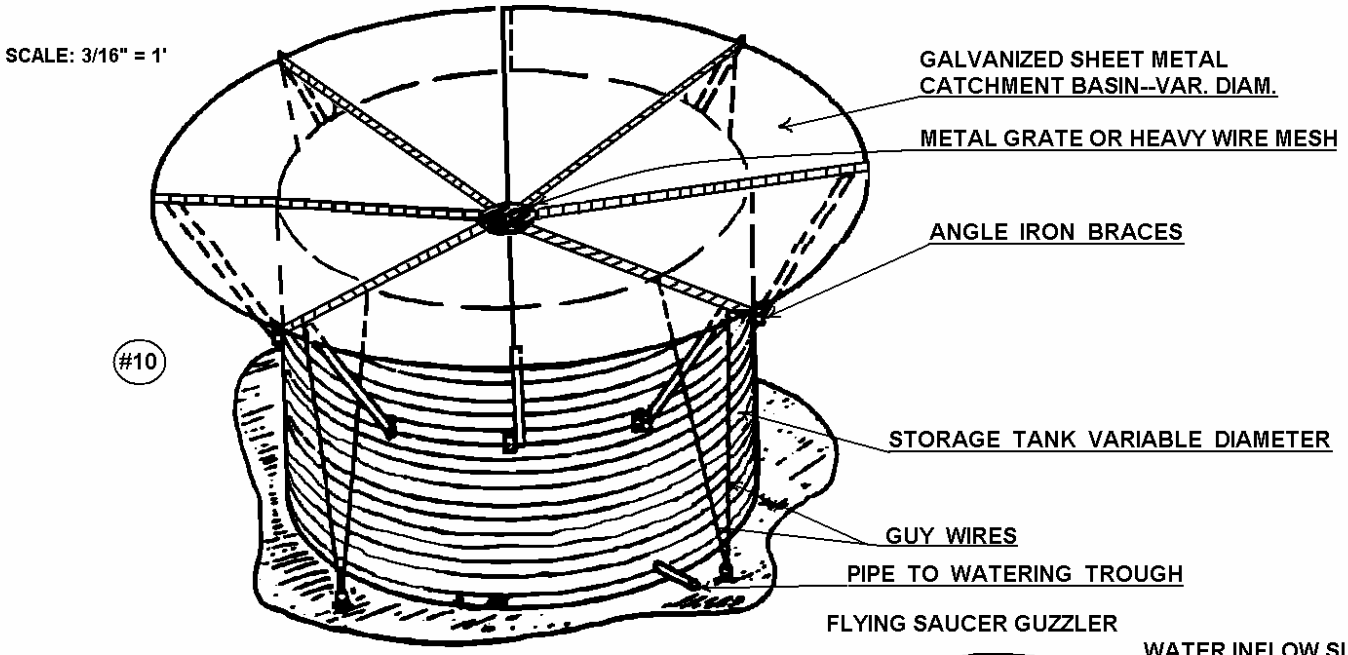

FLYING SAUCER GUZZLER

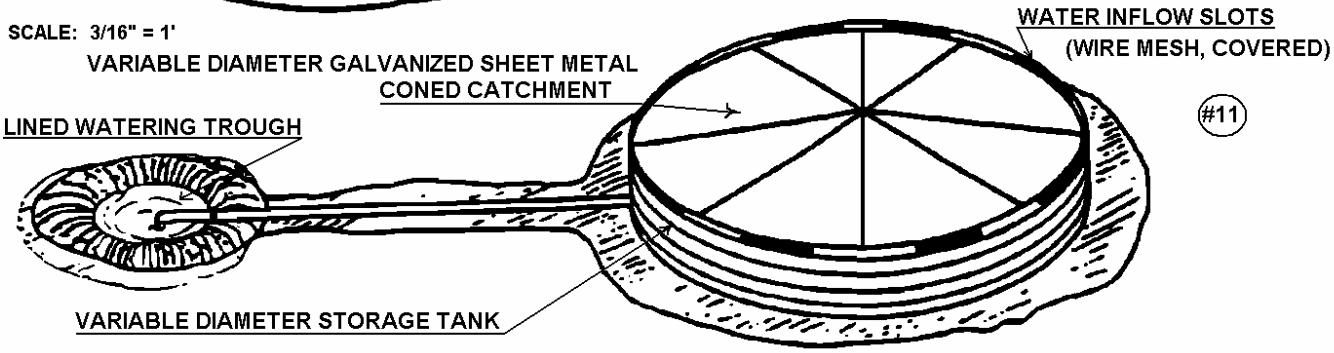

DRAWINGS BY TODD MAREK SEPT. 1991

WILDLIFE WATERING FACILITIES

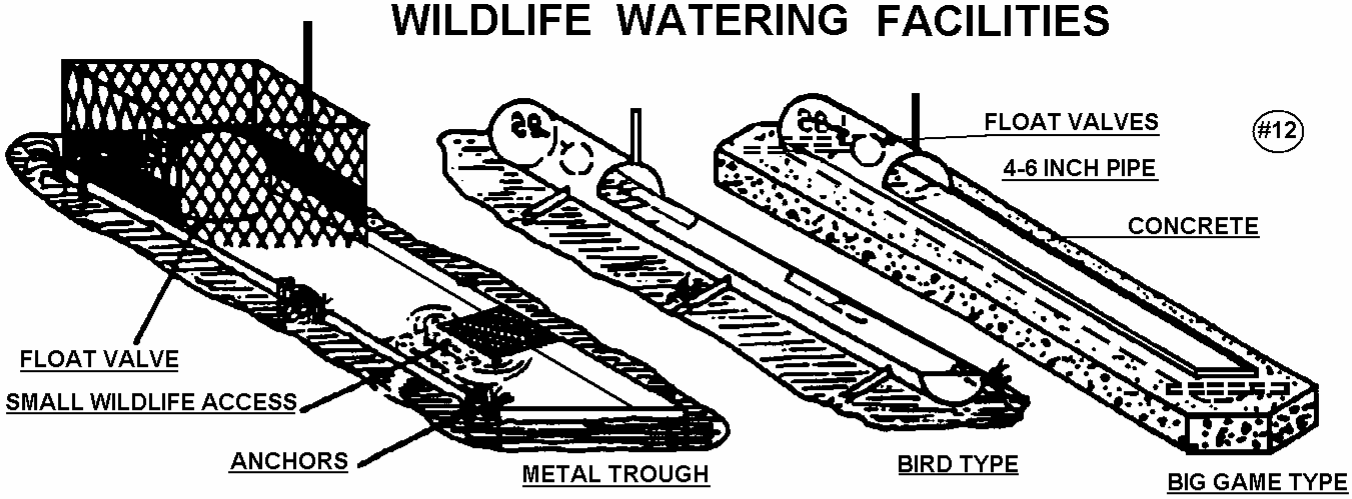

SCALE: 1 1/2 " = 1'

#13

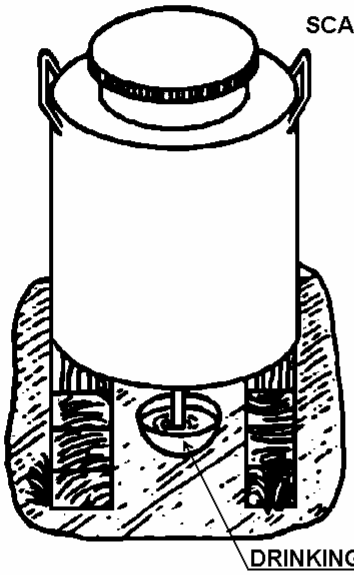

SCALE: 1" = 1'

#14

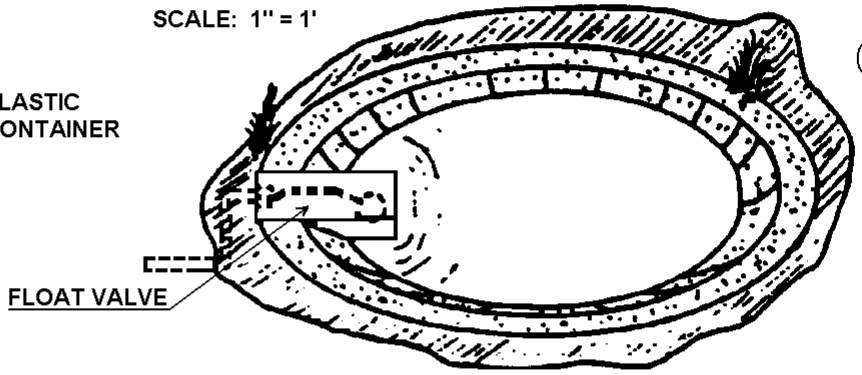

3 FT. DIAMETER BOWL APPROX. 8 IN. DEEP

SCALE: 1" - 1'

SHALLOW WADING AREA #15

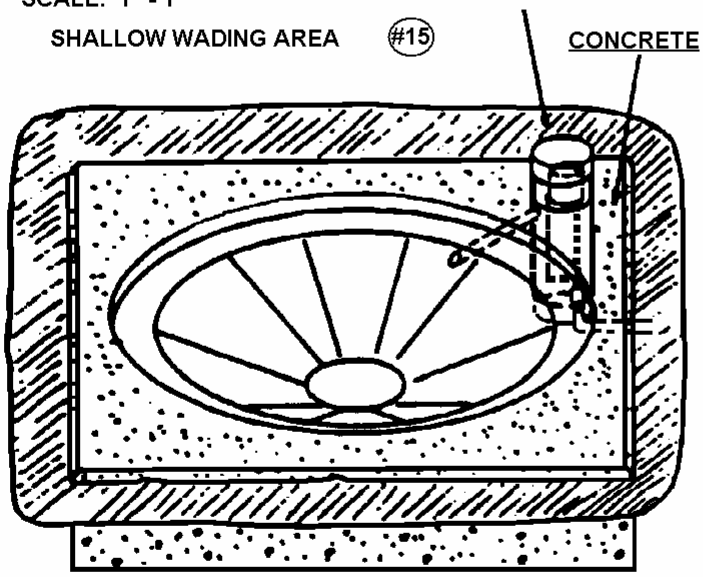

RANCH SPECIALTIES

SCALE 3/4" = 1'

#16

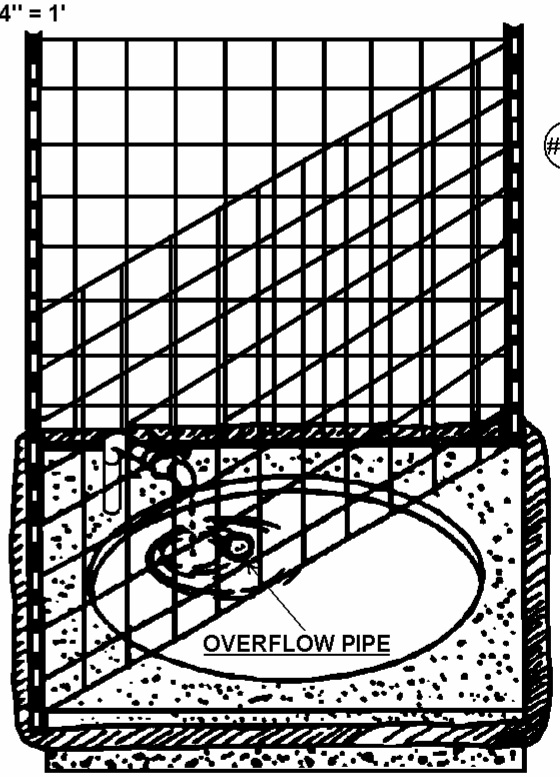

3 FT. DIAM. BOWL APPROX 8 IN. DEEP

DRAWINGS BY TODD A. MAREK

Appendix P

Managing Red Imported Fire Ants in Wildlife Areas

by Bastian Drees, Extension Entomologist and Fire Ant Project Coordinator
Texas A&M University

The red imported fire ant, *Solenopsis invicta* (Buren), is an introduced species that arrived in Mobile, Alabama from South America around the 1920s. This species has had an enormous impact in the southeastern United States, and continues to spread into areas of North America with mild climates and adequate moisture and food. About two thirds of eastern Texas is currently infested.

Biology of the red imported fire ant: Like other ants, the fire ant is a social insect and colonies reside in mounds of dirt that may exceed 18 inches in height. Mounds commonly occur in open, sunny areas. Periodically, winged reproductive male and female ants leave colonies on mating flights. Mated females (queens) can fly for miles, land and start a new colony. Development from egg to adult occurs in about 30 days, progressing though four larval stages and a pupal stage. Worker ants (sterile female ants capable of stinging) can number in the hundreds of thousands in a mature colony. Two forms of fire ants occur: single queen and multiple queen colonies. Multiple queen colony infested land can harbor 200 to 800 or more colonies per acre since worker ants are not territorial and move freely from mound to mound.

Fire ant mounds can rapidly become numerous on lands disturbed by mechanical methods, pesticide use or flooding. The ants disperse naturally through mating flights, mass movement of colonies or by floating to new locations in flood water. Fire ants can travel long distances when newly-mated queens land in cars, trucks or trains. Shipments of hay, nursery stock or soil from an infested area may relocate entire colonies or nests. Quarantine regulations, enforced by the Texas Department of Agriculture, prevent movement of infested articles from infested (quarantined) to non-infested areas.

Fire ants feed primarily on other insects and arthropods (ticks, chiggers), although they "tend" some species of sucking insects (aphids) which provide them with a sugary solution (honeydew) upon contact. This imported species has displaced many native ant species and eliminated food used by some wildlife. Fire ants recruit to newborn livestock and wildlife on the ground or those nesting in low trees, causing medical problems associated with multiple stings and, occasionally, death. Populations of some wildlife species may be dramatically reduced.

Impact on wildlife: Certain forms of wildlife, such as deer, ground-nesting birds, and reptiles, are especially affected by ants during and soon after birth or hatching. The risk is greatest during the warm months. Fawns are vulnerable because they are born in June and because they instinctively remain motionless in their hiding places. Hatching quail and ground-nesting waterfowl chicks are also attacked. However, the impact of fire ants on area-wide populations of wildlife remains controversial and largely undocumented with data from scientific studies. In Texas, no endangered species has

been reported lost because of fire ants. ***Insecticide-based fire ant control programs in wildlife areas are discouraged unless the benefits from such treatments have been documented***. Many pesticides are toxic to non-target organisms (particularly to aquatic organisms) and may directly or indirectly affect game species if not used properly. Below are some considerations when selecting management options:

1. If wildlife breeding areas are considered non-agricultural lands, fire ants on these lands can be treated with insecticide products registered for this kind of usage site, *e.g.,* non-agricultural lands, ornamental turfgrass, way-side areas). However, if these lands are claimed to be agricultural lands, or if the game/wildlife or other livestock is being produced to be harvested and consumed, insecticide products selected to treat ants on these lands must be registered for use on those sites, *e.g.,* wildlife or livestock areas, pastures, rangeland, etc.

2. Exotic game ranches are considered commercial agriculture areas. Breeding areas may be treated with products registered for use in wildlife or livestock areas, pastures, rangeland, etc.

Management Strategies: Non-chemical or cultural approaches to avioding fire ant problems can reduce various problems caused by fire ants while maintaining a stable ant population that will help suppress lone star ticks, filth breeding flies and other pests, while also deterring the multiple queen form. These include:

1. In operations where wildlife breeding is being managed, try to schedule breeding to assure that young are born during cooler months of the year when fire ants are less active (soil temperature below 65 degrees F). This will reduce the probability of ant attacks.
2. Use shallow discing or drag heavy objects such as railroad ties across pastures particularly after rotating livestock out of a pasture to temporarily flatten tall, hardened mounds (although this practice seldom eliminates fire ants) and scatter manure. Manure can breed fly larvae upon which fire ants feed.
3. Use disc-type (Kountz) cutters to cut hay. These machines are designed and promoted to withstand the impact of fire ant mounds, to reduce equipment damage.
4. Use mechanized balers and bale movers characteristic of round bale production to reduce human contact with potentially infested bales.
5. Remove hay bales from the field immediately to prevent ants from invading them, particularly when rain is anticipated.
6. Store bales off the ground or in an area around which the ants have been treated (Note: A quarantine is in effect which prohibits the shipment of hay from infested to non-infested counties without certificates. Call Texas Department of Agriculture personnel to certify that hay shipments are ant-free).

Insecticide-based management program: Fire ant populations can be suppressed in pastureland using currently available methods for $10 to $15 per acre per year. Current methods are not capable of eradicating this species and treatments need to be

periodically re-applied. Applications of some bait-formulated insecticides also affect native ant species that compete with fire ants. However, in "fully-infested areas" (20 or more mounds per acre), implementation of the “Two-Step Method” of fire ant management may be justified. This program relies on the periodic (annual, semi-annual) broadcast application of an effective fire ant bait product. These treatments can reduce mound numbers by up to 90 percent, but reduction requires several weeks to months to achieve, depending upon the product chosen, *e.g.*, Amdro® (hyrdamethylnon), the only bait product currently registered for use in cattle pastures takes 3 to 6 weeks; Logic® (fenoxycarb), currently registered for non-agricultural lands and horse pastures usually requires 2 to 6 months but suppresses ants for over a year). Individual mound treatments registered for use in livestock pastures (*i.e.*, Sevin® (carbaryl) formulations applied as individual mound drench cost about $0.10 per mound) can be used to treat "nuisance colonies" between bait applications. Additional insecticides being promoted for fire ant control in pastures include Organic Plus? Crop Insecticide (0.2% pyrethrins, 97.9% silicon dioxide from diatomaceous earth, and 1.1% piperonyl dioxide) and True Stop? Fire Ant Insecticide (0.21 percent rotenone and 0.41% cube root extract). **Always follow closely the instructions provided for pesticide use on the product’s label.**

In the future, there is great hope that research entomologists will be able to successfully import and release natural enemies of the fire ant from the native habitats in South America to permanently suppress the red imported fire ant. One potential parasite being investigated is a phorid fly which develops inside the heads of ants. In theory, adult phorid flies looking for worker fire ant hosts suppress ant foraging activities during the day, thereby allowing native ant species time to look for food and better compete with the fire ant. Support for fire ant research may allow other sustainable solutions to be developed.

The information given herein is for educational purposes only. Reference to commercial products or trade names is made with the understanding that no discrimination is intended and no endorsement by the Texas Agricultural Extension Service or the Texas Agricultural Experiment Station is implied.

Appendix Q

Trapping Brown-headed Cowbirds to Control Songbird Nest Parasitism

Trapping Brown-headed Cowbirds

The purpose of this guide is to assist landowners that wish to help songbird reproduction by building and operating a cowbird trap. Please note that all persons wishing to trap cowbirds should participate in the online training program before the trap is put into operation. This training is offered at no cost by **Texas Parks and Wildlife (TPW)**. All applicable state and federal laws must be observed during the duration of trapping. If questions arise, contact your closest **TPW** office for assistance.

Why Trap Cowbirds?

Throughout North America songbird numbers are declining. While there is no one single reason for this decline, one major contributing factor is the spread of the brown-headed cowbird. These birds were once limited to the short-grass prairies, where they followed the herds of buffalo, feeding on the insects stirred up by the movement of herds as they moved from place to place. Today however, this highly adaptive bird is found throughout North America. This is a problem because of the reproductive strategies the species employs. The cowbird is what is referred to as a brood parasite. This means the female lays her eggs in the nests of other birds, abandoning them to the care of foster parents. The foster birds raise the cowbird chick to the detriment of their own young. Because the female cowbird can lay as many as 70 eggs per season, susceptible species of songbirds, such as the black-capped vireo and the golden-cheeked warbler, that are already endangered, are particularly at risk.

Collecting Data

As with any scientific endeavor, cowbird trapping requires that data be collected in order to determine how effective it is. Collecting data also allows scientists to track the movements of banded birds, and hopefully to find new ways to reduce the parasitism rate that has caused many songbird populations to decline. By participating in this project landowners have the opportunity to help songbirds, and make a genuine contribution to the threatened and endangered wildlife in Texas.

Once the data has been collected, landowners should keep a copy, and forward a completed annual report to **Regional Migratory Bird Permitting Office for the U.S. Fish and Wildlife Service (USFWS)** by January 31st each year. This allows **USFWS** to monitor the total numbers of birds being trapped and the locations of the traps. Data to be collected should include the date, the number and type of non-target species that might get into the trap, the number of males, the number of females, and the numbers of banded birds that might be caught. *Banded birds are to be released* after the data is collected.

Selecting a Trapping Location

The location of the trap is critical to maximize cowbird capture and to minimize non-target birds being caught. The idea is to put the trap in a place that is as attractive to cowbirds as possible, without being disruptive to other species. Ideally the trap should be located in areas that include the following:

- Close to where cattle or other livestock graze.

- In open pasture, away from any brush, and in low grass.
- The trap should be readily accessible to vehicles, even after heavy rain.
- Water and some perching snag (dead trees) nearby.

Site Precautions

Even on a perfect location site there are precautions that should be taken to insure the safety of landowners and others participating in cowbird trapping.

One of the hazards to be aware of is that of predators. Any mammal, bird, or reptile that eats birds will be attracted to the traps in search of an easy meal. Keep the grass around the trap short. This will not only make it easier to spot snakes, but it will also make it more attractive to cowbirds. Raccoons and skunks will dig under the traps if precautions are not taken to keep them out. Owls and hawks also try to swoop down on the birds inside the trap. Fire ants can pose an additional hazard. Before using fire ant bait, check with your local Extension Service office for application recommendations. Always be sure to read and follow pesticide label directions. Never use any insecticides in the trap itself.

TRAP OPERATION: It is suggested that traps be operated from March 1 to May 31 ONLY. This is to avoid incidental catch of non-target species. After May 31, fledglings of beneficial species such as cardinals, mockingbirds, buntings, and finches are most abundant and are more likely to be accidentally trapped.

Setting up the Trap

Erect the trap on a level site with no gaps between the frame and the ground. Use a shovel to fill in any gaps, if necessary.

Place a one gallon poultry waterer on level ground inside the trap. Scatter about a half a coffee can of cleaned milo (grain sorghum) on the ground, being careful to avoid getting it in the water. Do not feed milo during rainy weather because the birds do not like soggy grain. Wait until the ground has dried up before scattering it out again. Each trap must contain adequate food, water and shade and be checked daily.

Since cowbirds are gregarious birds, the traps work best if about 10-15 live cowbirds are present to act as decoys. When first starting a trap without decoys, be patient. If cowbirds are in the area, they'll find and enter the trap.

Use a large minnow dip or trout net to catch birds in the trap. You must **immediately release** any non-target bird species. Any bird not a cowbird is a non-target bird. Always remove and dispose of any dead or injured birds (usually a result of avian predator attack on the trap). The most common species of non-target birds that have been found in traps are mockingbirds, cardinals, various sparrows, grackles, blackbirds, and loggerhead shrikes. Consult a bird field guide to help you identify these species. Non-target birds will enter the traps for a variety of reasons. Some are attracted to the grain, some for company, and still others just out of curiosity. Putting a board across one side at the top to provide shade to trapped birds is recommended. Humanely treating birds while in the trap and humanely euthanizing birds is important.

If a federally permitted wildlife rehabilitator is within 1 hour or less of your capture efforts, you must send injured or debilitated non-target federally protected migratory

birds to the rehabilitator. If no rehabilitator is closer than 1 hour away, you may euthanize an injured or debilitated bird of a non-target species unless the species is federally listed as an endangered, threatened, or candidate species, in which case you must deliver it to a rehabilitator and report the take to the nearest U.S. Fish and Wildlife Service Field Office or Special Agent.

For a listing of endangered, threatened birds:
http://tpwd.texas.gov/huntwild/wild/wildlife_diversity/nongame/listed-species/

For a listing of U.S. Fish and Wildlife Service Offices:
http://www.fws.gov/southwest/es/FieldOffices.html

For a listing of U.S. Fish and Wildlife Special Agents:
http://www.fws.gov/southwest/lawenforcement/statecontacts.html

Euthanizing Cowbirds

This is the real job of protecting songbirds from nest parasitism. Whichever method is used to kill cowbirds, it must be humane, fast, and certain*. The recommended method is cervical dislocation, or separating the vertebra.*

Cervical dislocation: Hold top of neck between thumb and forefinger, grab head with other hand, turn and lift until you feel the cervical vertebrae detach from the head – HINT: hold the bird away from you when you do this the first few times until you have the "touch". A catch box, net, gloves, and a light for night time are useful items to have on hand.

Alternative Dispatch Methods: Carbon dioxide (CO_2) gas in a 5-gallon bucket may be used to euthanize brown-headed cowbirds. Use dry ice as the source of carbon dioxide. Cut a hole in the top of the bucket, cover opening with a piece of inner tube, or similar material, that has a slash in it to facilitate putting birds inside. Birds must not be touching the dry ice! Birds should be dead within 20 seconds.

Taking Traps out of Operation

Because cowbirds are a native species in North America, they are protected under the Migratory Bird Treaty Act. However, there are exceptions to this law for acts of depredation by a few select species. Under the **Texas Parks and Wildlife** Code, Section 64.002(c) brown-headed cowbirds are included among this small group of eight non-protected bird species that "may be killed at any time and their nests or eggs may be destroyed." State regulations may not supersede federal regulations, so it is important that all participants in this project follow the protocols outlined here in this module. Again, it is recommended that no traps be in operation either before March 1, or after May 31.

If it is not possible to remove the trap to a location where it can be stored under cover, then certain precautions must be taken because birds, including non-target species, will tend to enter the trap. The traps may be taken out of operation by placing boards over the entry slots or by securing the door in an open position. Be sure to remove all cowbirds, and release any banded birds, disposing of any dead or injured birds.

Reporting the Data

Be sure to record all data on birds captured on an approved data form and forward copies to Unites States Fish and Wildlife Office in Albuquerque, New Mexico. Landowners who are actively participating in trapping brown-headed cowbirds must submit their data by January 31st each year. Submit data to:

U.S. Fish and Wildlife Service
Regional Migratory Bird Permit Offices
P.O. Box 709
Albuquerque, NM 87103

Materials List for 6x8 Portable Wood Cowbird Trap

Number	Description	Comments
16	2x4x8 (treated)	Rip 2x4 into 2x2
2	Sheets ½” CDX plywood	1 sheet is for slot assembly, 1 sheet is to cut up for gussets.
64 linear ft	½” mesh hailscreen	Bought in 100 ft. rolls
1 pair	Tight pin hinges (3”)	Door hinges
1	Screen door-handle	Outside of door
1	Galvanized hasp (4½”)	Use with padlock for security
1	Screen door latch	Used on inside of door
14	10”x12” shelf brackets	Used to square panels (2 per panel)
125 (approx)	1” drywall screws	Field assembly of slot assembly, attaching shelf brackets to panels.
50 (approx)	3” galvanized deck screws	Field assembly (panel to panel)
300 (approx)	1½” pneumatic staples	Used attach gussets
600 (approx)	1 pneumatic staples	Used to attach screen to panels
300 (approx)	½” staples	Used to attach screen to slot assembly

Recommended Tools For Construction

Shop Assembly of Panels

Table saw – for ripping 2x2
Chop saw – for cutting boards to length
Electric hand saw – for cutting out gussets and slot assembly
Retractable rule – for measuring dimensions
Electric or cordless drill/driver – for driving screws
Pneumatic or electric nibbler – for cutting hail screen
Pneumatic stapler – for attaching gussets and wire
Pneumatic nailer – for assembly of panels
(optional but helpful – Panels can be assembled with 3” deck screws if nailer is not available.)

Field Assembly

Cordless drill/driver – for driving screws
Bar of soap – to lubricate screw threads
Hand stapler – to secure wire to ends of drop entrance
Step ladder – for attaching top panels

Construction Tips

- Use treated lumber throughout. Added initial cost is compensated for by longer field life and reduced maintenance.

- Don't rip lumber until you are ready to start construction. Ripped lumber will bow and twist if allowed to sit for several days.

- Use a shelf bracket on diagonal corners to square each panel before attaching gussets. To cut gussets, lay out sheet of plywood in 12" squares, then draw diagonals across the square. A sheet of plywood will make 64 gussets.

- Gussets go on one side of panel, hailscreen attaches to the other side. For side and top panels, wire will end up being on the inside on the panel. This prevents birds from roosting on framework next to wire where they are prone to predation. **Exception:** End panels are constructed the same way, but during final trap assembly, the wire goes on the outside, because the drop entrance attaches to horizontal members for structural stability.

- This pattern is designed to use 48" wide hailscreen to maximize efficiency. Internal cross members are placed to allow for slight overlap. Wide hailscreen will probably not be readily available in stock, but any building supply can order it. Use of narrower hailscreen requires repositioning of tack strips, and results in higher lumber use.

- To maximize shop efficiency: cut gussets; rip lumber; pre-cut lengths; cut out slot assembly; assemble side, top, and end panels; attach hailscreen; final assembly. When building multiple units, performing similar actions for several traps at the same time will allow you to develop an assembly line process that cuts construction time per unit.

- ***Slot width of 1.25 inches in slot assembly is <u>critical</u>***. Wider slots will increase non-target captures, including small raptors, which will feed on your decoy birds. Escapes by females may also increase with wider slots.

- Side panels attach to the outside of end panels. Nothing else will fit if you attach ends outside.

- During final assembly assemble in this order: end, side, side, top, top, dropping slot assembly (3 pieces), then finish with the other end.

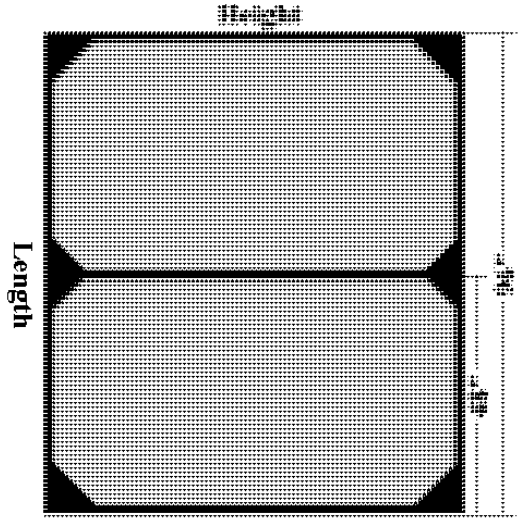

Left Side Panel (same as right panel)

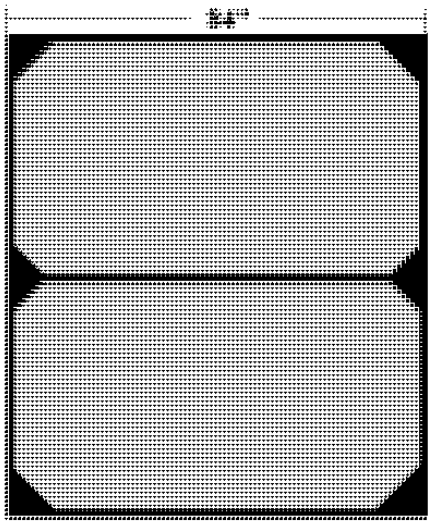

Right Side Panel

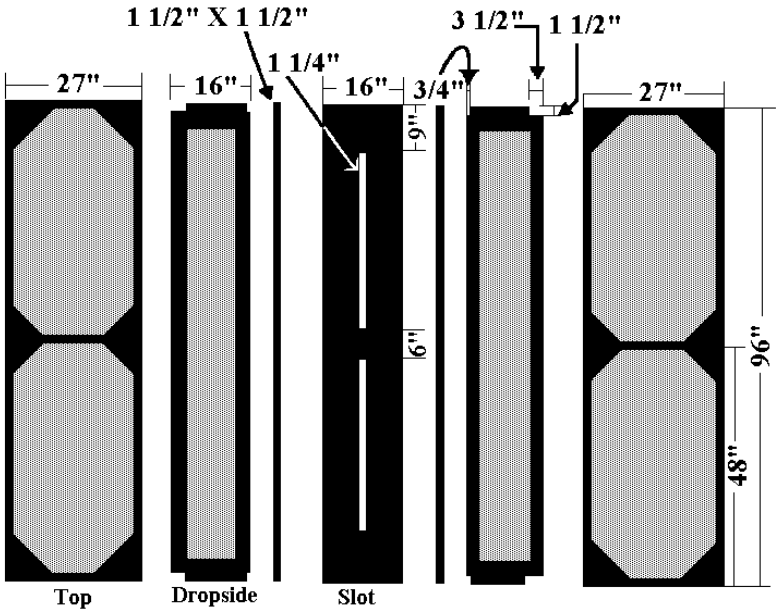

Top Panel/Slot Assembly

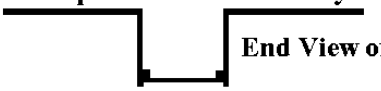

End View of Top Panel/Slot Assembly

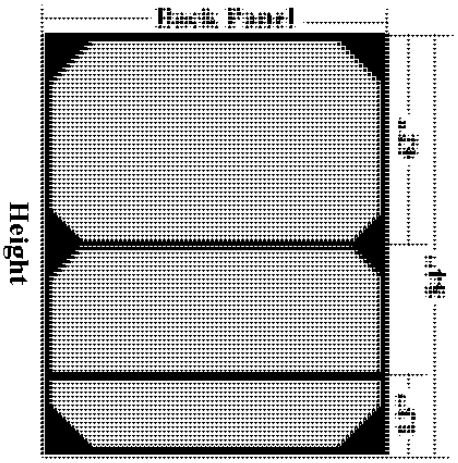

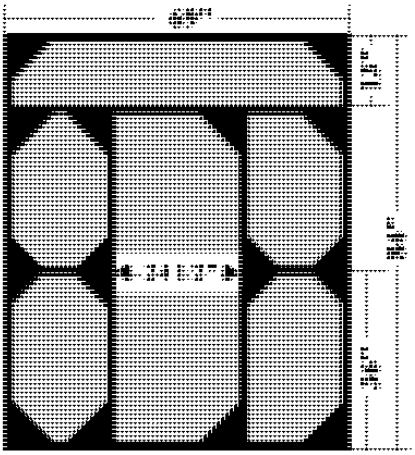

Front Panel

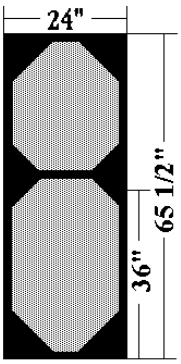

Door

Cowbird Trap Plans

Plans developed by Fort Hood Environmental Division.

Materials List for 6x8 Portable Metal Cowbird Trap

Number	Description	Comments
300	1 ½” fender washers*	attach wire to the trap frame
210 ft.	1 ½” 14 gauge square tubing	frame
16 ft.	1 ½” x 1 ½” x ⅛” angle iron	trap funnel base
15” w x 94 ½” lg	⅛” plate*	funnel entrance floor
2	2” weld-on hinges*	door hinge
1	weld-on door latch*	used to keep door secured
50 ft. of 48”	½” hardware cloth	bought in 100 ft. rolls
40 ft. of 36”	½” hardware cloth	bought in 100 ft. rolls

Recommended Tools:

220 amp electric wire feed welding machine	Vise-grip pliers
Oxyacetylene cutting torch or pipe saw	6 3 or 4 inch C-clamps
Electric drill and metal bits	Metal measuring tape
Driver for self-tapping metal screws	Wire brush
Hacksaw	Wire shears or tin snips
Hammer	Metal dirt rake

Order of Construction: *(Refer to diagram for placement before welding)*

<u>Sides</u> (Cuts necessary for both sides)
2 cuts 96” of 1 ½” x 1 ½” 14 gauge square tubing (top of side panels).
2 cuts 96” of 1 ½” x 1 ½” heavy gauge square tubing (base of side panels).
4 cuts 81” of 1 ½” x 1 ½” 14 gauge square tubing (vertical corner posts).
2 cuts 93” of 1 ½” x 1 ½” 14 gauge square tubing (center braces).

<u>Front</u>
2 cuts 72” of 1 ½” x 1 ½” 14 gauge square tubing (door headers).
1 cut 72” of 1 ½” x 1 ½” heavy gauge square tubing (base piece).
2 cuts 11” of 1 ½” x 1 ½” 14 gauge square tubing (bracing over the door).
2 cuts 22 ¼” of 1 ½” x 1 ½” 14 gauge square tubing (mid-section bracing by door).
2 cuts 68 ½” of 1 ½” x 1 ½” 14 gauge square tubing (doorframe).

<u>Door</u>
3 cuts 21” of 1 ½” x 1 ½” 14 gauge square tubing (top, middle, bottom bracing).
2 cuts 68” of 1 ½” x 1 ½” 14 gauge square tubing (sides of door).

<u>Back</u>
3 cuts 72” of 1 ½” x 1 ½” 14 gauge square tubing (top, center frame pieces).
1 cut 72” of 1 ½” x 1 ½” heavy gauge square tubing (base piece).
2 cuts 11” of 1 ½” x 1 ½” 14 gauge square tubing (top bracing pieces).

Top
2 cuts 93” of 1 ½” x 1 ½” 14 gauge square tubing (upper frame for trap funnel).
2 cuts 93” of 1 ½” x 1 ½” x ⅛” angle iron. (lower trap entrance plate supports).
15” wide x 94 ½” long ⅛” plate (trap entrance plate). Cut two openings 36 ¼” x 1 ¼” as shown in the diagram. *The exact 1 ¼” width of each opening is critical. (Note: If desired, this plate can be made of wood, rather than metal.)*

Wire Mesh covering

Center the wire at the door and wrap it around the entire trap, using a dirt rake to pull the wire tight. Don’t forget to cover the floor of the trap (this will help keep predators out). Attach the wire to the frame with fender washers and self-tapping screws placed every 12 inches apart.

Door: 1 piece 67 ¾" x 23 ½". Trim to fit.

Placement Notes:
A. ¼” gap on hinge side of door between door and frame.
B. Hinge starts 10” from the top.
C. Hinge starts 10” from the bottom.

***ALTERNATE CONSTRUCTION METHODS**

Attaching Wire Mesh (Alternate Method)
If desired, the screen mesh can be attached to the trap using 130 feet of 1” x 1/8” strap, and 275 self-tapping metal screws. Make the following cuts if this method is used:

Front:	2 – 74 ½”	Both Sides:	6 – 95 ¾”
	2 – 23 ½”		4 – 6”
	2 – 27 ½”		
	2 – 11”	Rear:	3 – 74 ½”
			2 – 11 ½”
Door:	3 – 23 ½”		1 – 19”
	2 – 21” (upper sides)		
	2 – 42 ¾” (lower sides)	Center Trap Angle:	2 – 93”

Hold all screen in place with 1" x ⅛" plate with screws placed every 6 inches.

Alternate Door Hinges and Latch Construction:
Note: Put door latch on first, then install frame latch to fit.

1 ft. of 1” x ¼” strap
2 ft. of ⅜” tubing
2 ft. of 7/16” rod

Make the following cuts:
4 cuts 2” of 3/8” tubing (door hinge part)

2 cuts 5” of 7/16” rod (door hinge part)
1 cut 7” of 1” x ¼” strap (door latch)
1 cut 5” of 1” x ¼” strap (on door)
1 cut 2” of 3/8” tubing (on door)
1 cut 3 ¼” 7/16” rod

Alternate Trap Entrance Plate:
2 pieces of plate 7” wide x 94 ½” long, separated by 1 ¼” inches that will form the opening. *The exact 1 ¼” width of the opening is critical.*

Side Panels (Make 2)

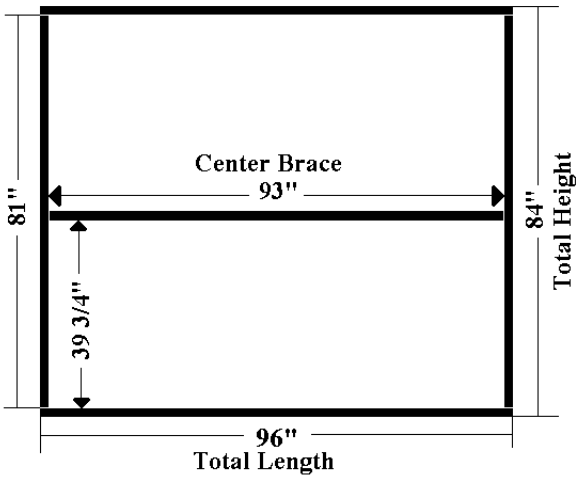

(Heavy gauge tubing on bottom)

Back Panel

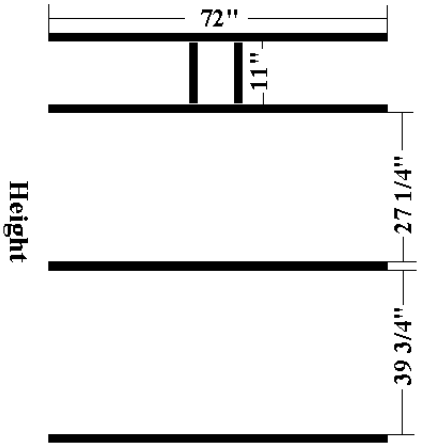

(Heavy gauge tubing on bottom)

Top

93" Top Center Upper Pieces

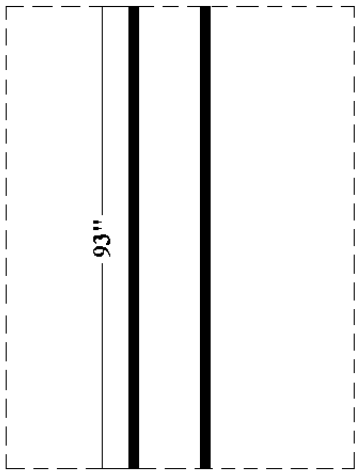

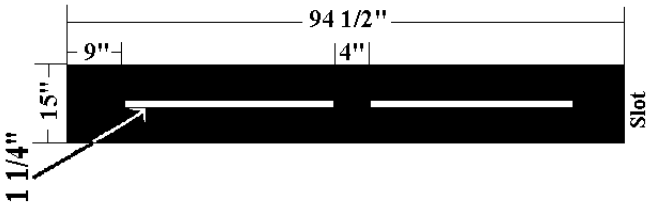

Top Panel/Slot Assembly

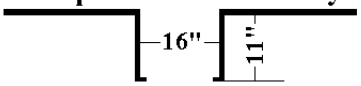

End View of Top Panel/Slot Assembly

Lower Cross pieces 93" angle iron

Front Panel

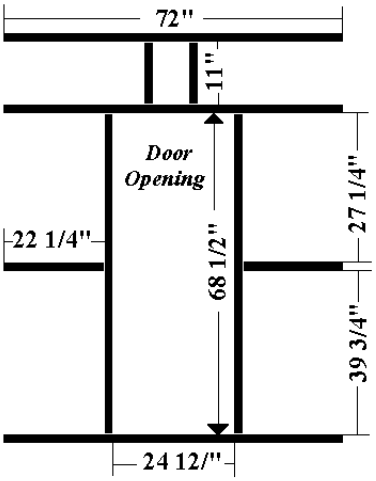

(Heavy gauge tubing on bottom)

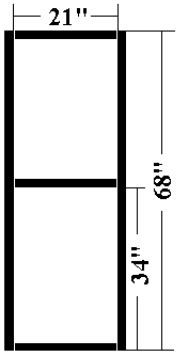

Door

Door Latch Assembly

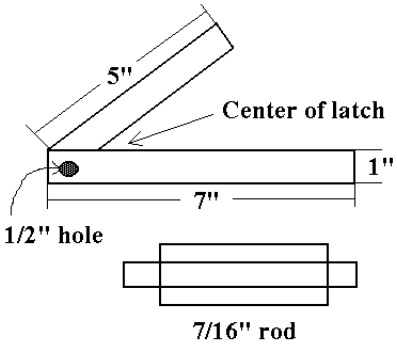

Weld rod to both sides of latch

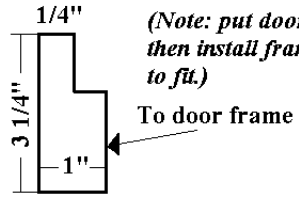

(Note: put door latch on then install frame latch to fit.)

Frame Latch
Side View

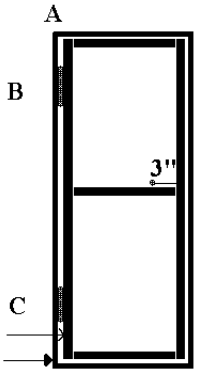

A. 1/4" gap between hinge side of door between door and frame.

B. Hinge starts 10" from top.

C. Hinge starts 10' from bottom.

Metal Cowbird Trap Plans

Appendix R

Small Acreage Management Techniques

(Abridged)

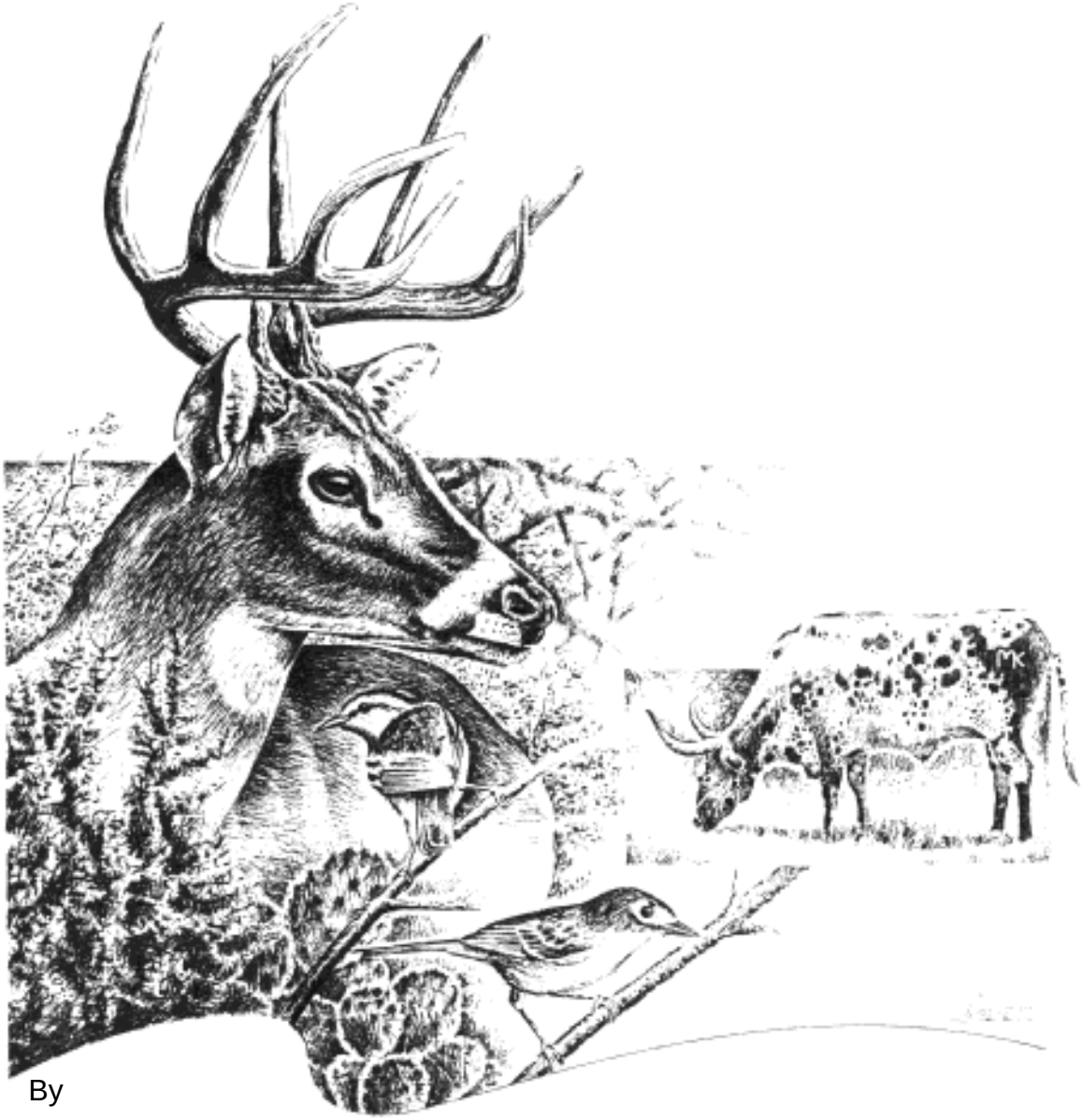

By

Trey Carpenter

Texas Parks and Wildlife

Small Acreage Management Techniques

By Trey Carpenter

The goal of this publication is to present wildlife habitat improvement projects to landowners with the least amount of narration as possible. The workbook describes the three necessary ingredients for wildlife habitat. Habitat is where wildlife lives, and they require food, water, and cover. The abundance and diversity of these three elements are directly proportional to the number of plant and animal species one can expect to attract.

Projects described in this workbook are intended to be as useful to an urban backyard wildlife enthusiast or a manager of a large ranch. The booklet will be most attractive to owners of small properties that want to attract wildlife and develop habitats for it. Incorporating the FOOD, WATER, and COVER projects laid out in this booklet will ensure good wildlife habitat. Managing properties for wildlife should be a holistic (big picture) practice; therefore much overlapping and duplication of the sections will occur.

FOOD

Providing food is an obvious and simple wildlife enhancement concept. There are many ways of supplying food to wildlife ranging from simple bird feeders to fenced food plots. It is a common misconception that an area knee-high in grass or a mature, closed-canopy forest is good wildlife habitat. There is little diversity in these situations and consequently these type habitats produce poor food sources for wildlife. Diversity is the key to quality wildlife habitat. This booklet will show how to create more edge effect to enhance wildlife habitat. The edge effect is the result of tow adjoining plant communities coming together. The **Food** section describes how to put “food on the table” for wildlife. Supplemental feeding is not a replacement for good habitat. Corn, milo, etc. are good attractants and can help hold wildlife in a given area; however, they are low in protein and do not meet the nutritional requirements for most wildlife. Periodic moving of feeders is necessary to

prevent disease transmission among wildlife species. In addition, washing with a 10% bleach solution is a safe way to keep structures germ-free.

WATER

Water is a necessity for most wildlife. If the property is question has an existing stream, creek, or pond, most of a wildlife manager's problems are solved. This booklet will show how to improve these riparian habitats for wildlife and how to more evenly distribute wildlife by creating new watering situations and improving existing structures. The more diverse the watering situations are, the greater the number of species that will benefit. The ideal situation is to have many watering type areas ranging from fast moving water to pools. A small dam on a creek is a good way to change and diversify an existing water system. Wet marshy areas, excluded from livestock, will benefit many wildlife species. These water projects also produce many unseen creatures that provide food for other animals along the food chain.

COVER

Cover can be broken down into three categories: nesting, escape, and feeding, with some overlapping of the three. Nesting boxes for birds are some of the most visible and enjoyable COVER projects. Cavity nesters such as bluebirds, and wrens are delightful to watch and easy to attract. Leaving snags, dead or dying trees may seem unattractive, but many birds depend upon them for their "natural" shelters.

Snags can be created by girdling a live tree. This entails ringing a tree's bark below the cambium level with a chain saw or axe. On small properties or around a house, a less drastic approach such as building a structure from limber products should be considered. Basic designs and dimensions for such structures have been included in the Nesting Cover portion of this workbook.

Escape cover can include brush piles, half-cut trees, and shrub plantings. These happen to be among some of the most popular wildlife enhancement projects. Most wildlife species are edge dwellers, and escape cover is necessary to provide protection from predators. Wildlife is not comfortable out in the wide open, and foods that they search out are not

always readily available in dense wooded situations. The line where these two areas meet compose the edge.

Feeding Cover is necessary for wildlife to forage over a large area. Brush clearing strategies are important to consider when trying to improve habitat in a small area. The more edge created, the more wildlife will benefit. Another method creating edge for wildlife is leaving fallow strips in agricultural plantings. This allows for year around feeding. Patterns and food sources will be described in the Cover Project section.

The amount of edge created can be greatly limited by thick matted amounts of grass if livestock is totally excluded. Many properties are too small to support livestock grazing. Continuous grazing of livestock is not recommended for small acreage. Continuous grazing of livestock, even if not "overstocked", could lead to less biodiversity. A single cow will select towards the most choice forage. This leads to over utilization of these preferred foods and allows secondary, invader type species, to flourish. This ultimately leads to less desirable type foods.

A good scenario for wildlife is a high intensity low frequency grazing system. By moving a large number of grazers into a pasture, a "mowing" effect can be achieved. Removal of old grass growth during late summer and winter can greatly benefit wildlife. The timing of grazing is important to prevent damage to vulnerable wildlife and plant species. Young trees and plants can be damaged, and nesting birds disturbed, during springtime grazing. Livestock should be rotated in and out of an area once the desired mowing effect has been achieved. For small property owners this poses a problem. A good solution is to incorporate the small property into a grazing system of a neighbor with a herd. Both parties can benefit if approximately 50% of grass is removed. Care should be taken that critical areas, such as food plots, structures and fragile riparian areas are restricted from the herd. Cattle are the best choice for grazing excess grass and the soil disturbance created by their "hoof action" will stimulate forb growth. Sheep, goats, and exotic species of deer will compete directly with native species for desirable food, water and space. Cattle are primarily grass foragers and do not pose a threat to native species for food if moderately stocked. "Moderation" is the key to deciding how many cows, goats, sheep, etc. are to be stocked. Remember that too many deer can over-utilize the vegetation in an area as drastically as sheep and goats.

Hunting, where permitted, is an important tool to keep many wildlife populations in check. Again, "moderation" is the key; care should be taken not to over-utilize any given species. Stay within the limits and recommendations provided by TPWD biologists for a given area.

Modifying Existing Agricultural Stands

Allow irregular areas in cultivation, such as this triangular plot, to go fallow for winter food—especially adjacent to brushy cover.

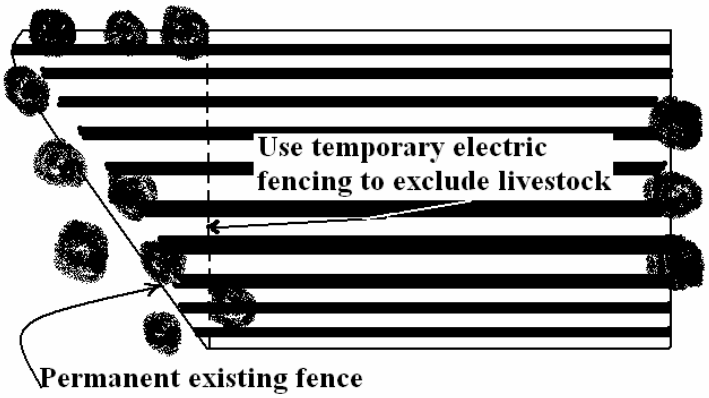

Food Plot. In Conservation Reserve Program (CRP) or old field.

- Useful in areas where row cropping and necessary foods are scarce
- Plant row type crops specifically for wildlife
- Maximum edge can be created by long narrow plots (1/8 – 2 acres)
- Position between two cover types (ex. Between mature tree stand and open area).
- These areas can serve as wildlife corridors.

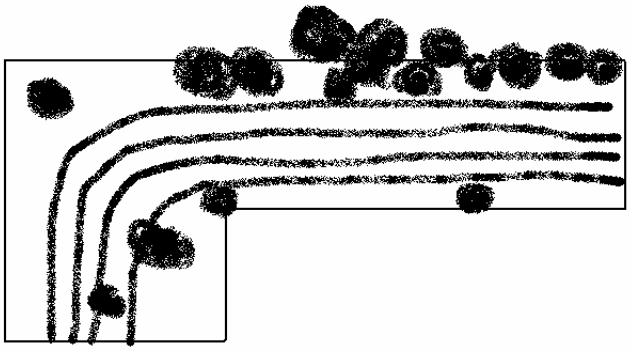

Fencing. Food plots specifically for wildlife, should be excluded from livestock with electric or barbed wire fence.

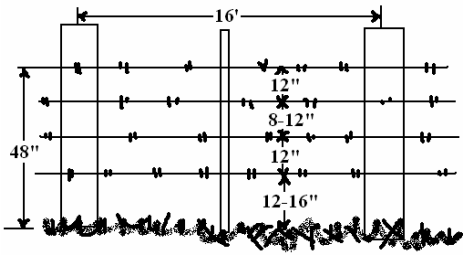

Barbed-wire Hints. Bottom wire should be a minimum of 12-16” from ground and smooth. Top wire should be no more than 48” (preferably lower), and 12” between it and next wire down. Fence stays should be used between posts to create a more rigid fence; this allows deer a better chance of struggling free should they become entangled.

Random Discing.

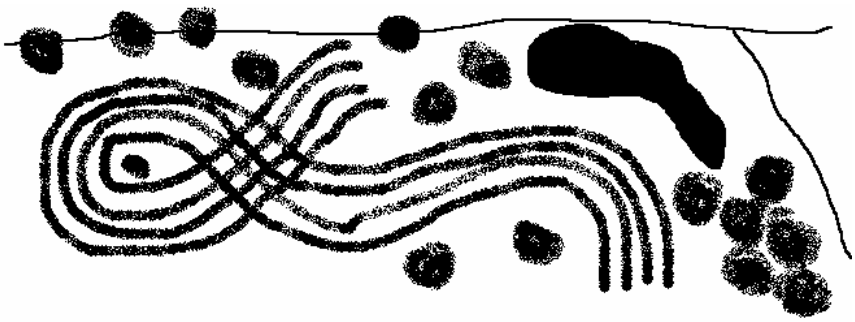

- Pull a disc or chisel plow behind tractor in early spring to stimulate native forbs for wildlife production.
- Slightly disc soil in non-highly erodable areas with good soil moisture.
- Try sparsely broadcasting wildlife food producing seeds. Follow up by dragging a log or chain to create a simple food plot.

Wildlife Plantings

HINTS:
--Need 25 inches of annual precipitation to be beneficial.
--Irrigation is an expensive alternative.
--Supplemental feeding is cheaper and more reliable.
--Use seed sources from within 200 miles north and south, and 100 miles east and west.
--Exclude from livestock.

Seed Species	Rate (lbs/acre)	Depth (inches)	Planting Time	Time to Maturity (days)	Drought Tolerance	Species Benefited*
Annual Sunflower	3-5	.25-.5	Mar.-May	100	High	MD,Q
Good drought insurance; will reseed yearly with spring discing.						
Fox-tail Millet	15-20	1-1.5	Apr-June	60-80	Good	MD,Q,T,WF
Similar to native bristle grass; can be planted 0 days before frost.						
Proso Millet	20-50	1-1.5	Apr-June	50-70	Good	MD,Q,T
Best adaped for North Texas (Rolling Plains)						
Japanese Millet	15-20	1-1.5	Apr-June	60-80	Poor	WF
Good in playa lakes in High Plains for waterfowl						
Sorghum Alum	6-Mar	2-Jan	Apr-June	100-120	Fair	MD,Q,T,D,WF
Do not plant too thick, to allow free movement throughout food plot						
Corn	10-Jul	2-Jan	Apr-June	170-190	Poor	MD,Q,T,D,WF
Should not be planted in areas less than 30 inches precipitation (unless irrigated). Shred in strips to allow free movement of wildlife.						
Sesbania	20-30	.5-1	June-July	120	Poor	MD,Q,T,D
Might require irrigation in arid areas						
Partridge Pea	2	1	Feb-March	120	Fair	ALL
Use local strains for best production						
Annual Pespedeza (Korean)	20-25	.25-.50	Post Frost	120	Poor-Fair	D,Q,T
Need 30+ inches of precipitation or irrigation						
Sesame (Benne)	1	.25-.50	Post Frost	120	Fair	D,Q
Use shattering variety for doves and quail						
Austrian Winter Peas	20-30	1-2	Fall			D,T
Illinois Bundle Flower	3	0.5	Spring-Fall		Good	MD,Q,T
Mix into areas when reestablishing grasses and other perennials.						
Clover	8-10	1-2	Fall		Poor	D,T
Engleman Daisy	3	1/8	Spring		Good	D,T
Four-wing Saltbush	8-10	0.5	Winter-Spring		Good	D,T
Oats	40-50	1-2	Fall-Spring		Fair	D,T,WF
Not as freeze resistant as wheat						
Reseeding Cow Peas	50-100	1-2	Spring		Fair	ALL
Maximillian Sunflower	3	1/8	Fall-Winter		Good	D,Q,T

Vetch	20-30	1-2	Fall	Fair	Q,D,T,MD
Egyptian Wheat	3-6	1-2	Spring	Fair	Q,MD,T
Winter Wheat	30-50	1-2	Fall-Spring	Fair	ALL

Best all round winter forage

***MD=mourning dove Q=Quail T=turkey WF=waterfowl D=deer**

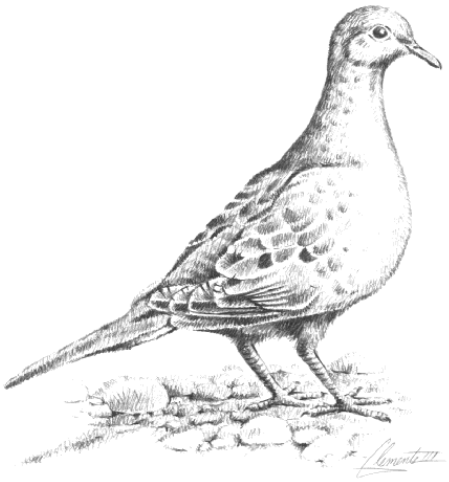

RECOMMENDED SPECIES FOR CENTRAL TEXAS

Botanical Name	Common Name	Site Preference
WILDFLOWERS		
Annuals		
Amblyolepis setigera	Huisache daisy	Dry, well-drained soil; sun
Cassia fasciculata	Partridge pea	Open, sandy fields; sun
Castilleja indivisa	Indian paintbrush	Sandy loam; sum
Centaurea americana	Basket flower	Dry, well-drained soil; sun
Coreopsis tinctoria	Coreopsis	Moist, sandy soil; sun
Dracopis amplexicaulis	Clasping-leaf coneflower	Moist areas, ditches; sun
Eryngium leavenworthii	Eryngo	Plains, prairies; sun
Eustoma grandiflorum	Texas bluebell	Moist areas in prairies; sun
Gaillardia pulchella	Indian blanket	Variety of soils, disturbed areas; sun
Linum lewsii	Blue flax	Sandy or rocky soils; sun
Lupinus texensis	Bluebonnet	Well-drained, alkaline soil; sun
Machaeranthera tanacetifolia	Tahoka daisy	Rocky or sandy soils; sun
Monarda citriodora	Horsemint	Well-drained, sandy loam-rocky soil
Palafoxia callosa	Palafoxia	Limestone soil; sun
Phacelia congesta	Blue curls	Moist, well-drained soils; sun-shade
Phlox drummondii	Drummond's phlox	Prefers sandy soil; sun-part sun
Rudbeckia hirta	Black-eyed Susan	Varies widely; sun-part sun
Thelesperma filifolium	Greenthread	Calcareous soils; sun
Perennials		
Aquilegia canadensis	Columbine	Rocky, well-drained sites; part shade
Asclepias tuberosa	Butterfly weed	Moist areas in prairies, roadsides; sun
Callirhoe digitata	Winecup	Open woods, plains; sun
C. involucrata	Winecup	Open woods, rocky hills; sun
Calvlophus drummondianus	Square-bud primrose	Sandy or rocky soils; sun
Cooperia drummondii	Rain lily	Open fields, prairies, lawns; sun
C. pedunculata	Rain lily	Open fields, prairies, lawns; sun
Coreopsis lanceolata	Lanceleaf coreopsis	Variety of soils; sun
Delphinium carolinianum	Prairie larkspur	Dry, open woods and fields; sun
Echinacea angustifolia	Purple coneflower	Dry, rocky prairies and hillsides; sun
E. purpurea	Purple coneflower	Rocky, open woods; sun-part sun
Engelmannia pinnatifida	Engelmann daisy	Open, calcareous sites; sun
Eryngium leavenworthii	Eryngo	Plains and prairies; sun
Eupatorium coelestinum	Mistflower	Moist, sandy wooded area; sun-part sun
Helianthus maximiliani	Maxilillian sunflower	Moist, clay-like soil; sun
Hymenoxys scaposa	four-nerve daisy	Dry, well-drained sites; sun

Ipomopsis rubra (biennial)	Standing cypress	Dry, sandy or rocky soil; sun
Liatris mucronata	Gayfeather	Well-drained soils; sun
L. pycnostachya	Gayfeather	Well-drained, calcareous soil; sun
Lobelia cardinalis	Cardinal flower	Wet to moist soil; sun-part shade
Melampodium leucanthum	Blackfoot daisy	Calcareous soil; sun
Monarda fistulosa	Beebalm	Dry, open woods, wet meadow
Oenothera macrocarpa	Missouri primrose	Limestone hills and prairies; sun
O. speciosa	Showy primrose	Open areas in a variety of soils; sun
Penstemon baccharifolius	Rock penstemon	Limestone crevices; sun-part shade
P. cobaea	Wild foxglove	Loamy soil, prairies; sun
P. triflorus	Hill Country penstemon	Limestone soil; sun-part shade
Physostegia pulchella	Obedient plant	Wet soils of bottomlands; part shade
Ratibida columnifera	Mexican hat	Variety of soil; sun-part sun
Salvia coccinea	Scarlet Sage	Thickets and open woods; part shade
S. engelmannii	Englemann sage	Limestone soils; sun
S. farinacea	Mealy blue sage	Wide variety of soils; sun-part sun
S. roemeriana	Cedar sage	Woody, rocky areas; part shade
Solidago spp.	Goldenrod	Sandy to clay soil; sun
Tradescantia spp.	Spiderwort	Prairies, plains, moist areas; part sun
Verbena bepennatifida	Dakota vervain	Fields; sun
V. elegans var. asperata	Mountain vervain	Limestone & sandstone outcrops; sun
Vernonia baldwinii	Ironweed	Dry, well-drained sites; sun
V. lindheimeri	Wooly ironweed	Limestone soil; sun
Wedelia hispida	*Wedelia*	Dry, well-drained sites; sun

SHRUBS

Blackland Prairie (east of the Balcones fault line)

Amorpha fruticosa var. angustifolia	False indigo	Moist woods, stream banks; calcareous soil
Anisacanthus wrighii	Flame acanthus	Dry, well-drained soil
Berberis swasevi	Texs barberry	Dry, well-drained soil
B. trifoliolata	Agarito	Dry, well-drained soil
Callicarpa americana	American beauty bush	Rich woods, thickets
Dalea frutescens	Black dalea	Dry soil in full sun
Erythrina herbacea	Coral bean	Sandy or loamy soils; sun-part shade
Eupatoruim havenense	Mistflower	Well-drained soil; rocky ravines
E. odoratum	Blue mistflower	Well-drained soil; full sun
Eysenhardtia texana	Kidneywood	Dry hills and canyons
Hesperaloe parviflora	Red yucca	Dry, well-drained soil; full sun
Lantana horrida	Trailing lantana	Dry, well-drained soil; sun-part-sun
Leucophyllum frutescens	Cenizo, Texas sage	Dry, well-drained soil; sun
Malvavixcus drummondii	Turk's cap	Moist, shaded areas
Mimosa borealis	Fragrant mimosa	Well-drained soil; sun

Nolina texana	Bear grass	Well-drained sites; full sun
Pavona lasiopetala	Rose pavonia	Dry, rocky woods or stream banks
Rhus aromatica	Fragrant sumac	Wooded areas; rocky soil
R. virens	Evergreen sumac	Rocky hillsides
Ruellia brittoniana	Narrow-leaf petunia	Well-drained sites; full sun
Salvia greggii	Autumn sage	Dry, well-drained soils; full sun
Viburnum rufidulum	Rusty blackhaw	Wood borders, stream edges, thickets

Edwards Plateau (west of the Balcones fault line)

Amorpha fruticosa	False indigo	Moist woods, streambanks; calcareous soil
Anisacanthus wrightii	Flame acanthus	Dry, well-drained soil
Bauhinia congesta	Orchid tree	Dry, well-drained soil; S. side of bdg.
Berberis swasevi	Texas barberry	Dry, well-drained soil
B. trifoliolata	Agarito	Dry, well-drained soil
Callicarpa americana	American beauty bush	Rich woods and thickets
Capsicum frutescens	Chile piquin	Well-drained sites
Chrysactinia mexicana	Damianita	Dry, rocky well-drained sites; sun
Colubrina texensis	Texas snakewood	Dry, well-drained sites
Dalea frutescens	Black dalea	Dry soil in full sun
Dasylirion texanum	Texas sotol	Dry, well-drained sites; full sun
Erythrina herbacea	Coral bean	Sandy or loamy soils; sun-part shade
Eupatorium havanense	Mistflower	Well-drained soil, rocky ravines
E. odoratum	Blue mistflower	Well-drained soil, full sun
Hesperaloe parviflora	Red yucca	Dry, well-drained soil; full sun
Hibiscus cardiophyllus	Heart-leaf hibiscus	Well-drained soil; sun-part-sun
Lantana horrida	Trailing lantana	Dry, well-drained soil; sun-part-sun
Leucophyllum frutescens	Cenizo, Texas sage	Dry, well-drained soil; sun
Lonicera albiflora	White honeysuckle	Rocky or sandy soils; cedar brakes
Malvavixcus drummondii	Turk's cap	Moist, shaded areas
Mimosa borealis	Fragrant mimosa	Well-drained soil; sun
Nolina texana	Bear grass	Well-drained sites; full sun
Pavona lasiopetala	Rose pavonia	Dry, rocky woods or stream banks
Pistacia texana	Pistache	Rocky, limestone stream banks, cliffs
Rhus aromatica	Fragrant sumac	Wooded areas; rocky soil
R. lanceolata	Flame-leaf sumac	Rocky hillsides; sun or shade
R. virens	Evergreen sumac	Rocky hillsides
Ruellia brittoniana	Narrow-leaf petunia	Well-drained sites; full sun
Salvia greggii	Autumn sage	Dry, well-drained soils; full sun
S. regia	Royal sage	Rocky, wooded slopes
Viburnum rufidulum	Rusty blackhaw	Wood borders, stream edges, thickets
Yucca rupicola	Twist-leaf yucca	Dry, rocky soil; full sun

TREES

Blackland Prairie (east of the Balcones fault line)

Conifers

Juniperus virginiana	Eastern red cedar	Fields, grasslands
Taxodium distichum	Bald cypress	Along stream banks

Shade Trees

Carya illinoinensis	Pecan	Rich, river-bottom soil
Catalapa speciosa	Catlpa	Deep, rich, moist soil
Fraxinus texensis	Texas ash	Prefers limestone hills
Juglans nigra	Eastern black walnut	Well-drained, loamy soil
Plantanus occidentalis	Sycamore	Rich bottomland soils along streams
Quercus glaucoides	Lacy oak	Limestone soils
O. macrocarpa	Bur oak	Moist forests along streams
O. muhlenbergii	Chinkapin oak	Calcareous uplands
O pungens var. vaseyana	Vasey oak	Dry, rocky slopes
O. shumardii	Shumard red oak	Moist hills, bottomlands, clay soils
O. texana	Texas red oak	Dry uplands
O. fusiformis	Escarpment live oak	Sandy loam soils, also clay soils
Sapindus drummondii	Western soapberry	Moist soils along streams
Ulmus crassifolia	Cedar elm	Prefers limestone soils

Small Trees

Cercis canadensis var. mexicana	Mexican redbud	Rich, moist sandy loam
C. canadensis var. texensis	Redbud	Rich, moist sandy loam
Chilopsis linearis	Desert willow	Dry, well-drained areas
Cotinus obovatus	Smoketree	Rocky banks and hillsides
Diospyros texana	Texas persimmon	Dry, well-drained sites
Eysenhardtia texana	Texas kidneywood	Dry, well-drained sites
Ilex decidua	Possom-haw holly	Rich, moist soils
I. vomitoria	Yaupon	Low, moist woods
Parkinsonia aculeata	Retama	Moist, sandy soils
Pistacia texana	Texas pistachio	Rocky limestone soil
Prosopis glandulosa	Mesquite	Variety of soils, well-drained site
Prunus mexicana	Mexican plum	Well-drained, but moist sites
Rhamnus caroliniana	Carolina buckthorn	Low areas, moist site
Rhus glabra	Scarlet sumac	Moist, rich soil
Sophora affinis	Eye’s necklace	Limestone soils on hills and banks
S. secundiflora	Mountain laurel	Limestone soils
Ungnadia speciosa	Mexican buckeye	Limestone soils and moist areas

TREES

Edwards Plateau (west of the Balcones fault line)

Conifers

Juniperus virginiana	Eastern red cedar	Fields, grasslands
Taxodium distichum	Bald cypress	Along stream banks

Shade Trees

Arbutus xalapensis	Texas madrone	Limestone or igneous hills
Carya illinoinensis	Pecan	Rich, river-bottom soil
Fraxinus texensis	Texas ash	Prefers limestone hills
Juglans microcarpa	Texas black walnut	Valleys and rocky stream beds
J. nigra	Eastern black walnut	Well-drained, loamy soil
Plantanus occidentalis var. glabrata	Texas plane tree	Limestone soils
Quercus glaucoides	Lacy oak	Limestone soils
O. buckleyi	Buckley oak	Limestone soils
O. macrocarpa	Bur oak	Moist forests along streams
O. muhlenbergii	Chinkapin oak	Calcareous uplands
O pungens var. vaseyana	Vasey oak	Dry, rocky slopes
O. fusiformis	Escarpment live oak	Sandy loam soils, also clay soils
Sapindus drummondii	Western soapberry	Moist soils along streams
Ulmus crassifolia	Cedar elm	Prefers limestone soils

Small Trees

Acacia wrightii	Wright acacia	Dry, rocky soils
Acer grandidentatum	Bigtooth maple	Valleys & canyons (protected areas)
Aesculus arguta	White buckeye	Limestone and granite soils
A. pavia	Red buckeye	Limestone canyons and rocky hills
Cercis canadensis var. mexicana	Mexican redbud	Rich, moist sandy loam
C. canadensis var. texensis	Redbud	Rich, moist sandy loam
Chilopsis linearis	Desert willow	Dry, well-drained areas
Cotinus obovatus	Smoketree	Rocky banks and hillsides
Diospyros texana	Texas persimmon	Dry, well-drained sites
Eysenhardtia texana	Texas kidneywood	Dry, well-drained sites
Ilex decidua	Possom-haw holly	Rich, moist soils
I. vomitoria	Yaupon	Low, moist woods
Parkinsonia aculeata	Retama	Moist, sandy soils
Pistacia texana	Texas pistachio	Rocky limestone soil
Prosopis glandulosa	Mesquite	Variety of soils, well-drained site
Prunus mexicana	Mexican plum	Well-drained, but moist sites
Rhamnus caroliniana	Carolina buckthorn	Low areas, moist site
Rhus glabra	Scarlet sumac	Moist, rich soil
Sophora affinis	Eye’s necklace	Limestone soils on hills and banks
S. secundiflora	Mountain laurel	Limestone soils
Ungnadia speciosa	Mexican buckeye	Limestone soils and moist areas
Yucca thompsonia	Thompson yucca	Dry, rocky sites

VINES

Campsis radicans	Trumpet vine	Sun to part sun

Clematis pitcheri	Purple leatherflower	Sun to part sun
C. texensis	Scarlet leatherflower	Limestone cliffs, rocky areas, sun to part sun
Lonicera sempervirens	Coral huneysuckle	Sun
Parthenocissus quinquefolia	Virginia creeper	Sun to part sun
Passiflora incarnata	Passion flower	Sun to shade, part sun

GRASSES

Andropogon gerardi	Big bluestem	Prairies, open woods, sandy-loamy soil
A. glomeratus	Bushy bluestem	Prairies, open woods, sandy-loamy soil
Bouteloua curtipendula	Sideoats grama	Prairies, open woods, sandy-loamy soil
B. hirsuta	Hairy grama	Low, moist sites
B. pectinata	Tall grama	Loose, alkaline soils
Buchloe dactyloides	Buffalograss	Variety of soils
Hilaria belangeri	Curly mesquite	Limestone outcrops and hilltops
Melica nitens	Threeflower melic	Full sun; prefers clay soils
Muhlenbergia hindheimeri	Lindheimer muhly	Rocky slopes, hillsides, grassy plains
M. reverchonii	Seep muhly	Calcareous moist sites
Panicum virgatum	Switchgrass	Moist lowlands
Schizachyruim scoparium	Indiangrass	Open woods and prairies
Sporobolus asper	Tall dropseed	Borders of woods and prairies
Tripsacum dactyloides	Eastern gramagrass	Low, moist grasslands

Deer Resistant Plants That Are Well-adapted to Central Texas

Loss of habitat and other environmental stress can result in almost any plant being eaten by deer. Moreover, deer tastes vary widely. This list ranks each plant for deer resistance through the number in parentheses at the end of the listing.

1 = Safe; Deer don't eat
2 = Deer eat flowers only
3 = Deer sometimes eat
4 = Deer eat plants and flowers, but it's not a first choice

Annuals
Bluebonnet, LUPINUS (1)
Marigold, TAGETES spp. (3)
Periwinkle, VINCA rosea (3)
ZINNA (3)

Bulbs
CALADIUM (3)
Daffodil (1)
IRIS (1)
Snowdrop (1)
Tulip (1)

Grasses
Bamboos, BAMUSA (3)
Beargrass, NOLINA spp. (1)
Fescues, FESCUEA spp. (3)
Little bluestem (1)
Muhly Grass, MUHLENBERGIA lindeim (1)
Pampas grass, CORTADERIA spp. (1)
Purple Fountain Grass (1)
Seep Muhly (1)

Herbs
ALOE (1)
ARTEMISIA (3)
English Lavender (3)
Mexican Marigold Mint (3)
Mexican Oregano (1)
Rosemary (1)
Sage (1)
Yarrow (3)

Perennials
AGAVE (1)
AJUGA reptans (3)
Artichoke (3)
ASTER frikarti (3)
Bee Balm, MONARDA (3)
Black-eyed Susan, RUDECKIA hirta (3)
Blackfoot Daisy, MELAMPODIUM leucanthum (3)
Butterfly Weed, ASCLEPIAS tuberosa (3)
Cactus (1)
Columbine,AQUILEGIA canadensis (3)
Coneflower, ECHINACEA spp. (3)
COREOPSIS hyb. And spp. (2)
Dusty Miller, CENTAUREA cineraria (3)
Ferns: Wood fern, DRYOPTERIS spp. (1)
Foxglove, DIGITALIS (2)
Gayfeather, LIATRIS (2)
Hummingbird Bush, ANISACANTHUS (1)
IRIS (1)
Lamb's Ear, STACHYS byzintina (1)
LANTANA (horrida, no nibbling) (3)
Lavender Cotton, SANTOLINA (1)
Lily of the Nile, AGAPANTHUS (1)
Mexican Marigold Mint,TAGETES lucida (3)
Mexican Petunia, RUELLIA spp. (1)
OXALIS (3)

Oxeye Daisy, CHRYS leucanthurn (1)
PENSTEMON (3)
Red Yucca, HESPERALOE parvifolia (2)
Rock Rose, PAVONIA (3)
Roses (Lady Banks Rose, no nibbling) (4)
Rosemary, ROSMARINUS officinalis (1)
Russian Sage, PAERVOSDIA (1)
SALVIA coccinea (3)
SALVIA greggii (Cherry sage, less nibbling) (3)
SALVIA leucantha (1)
Silver Artemisia, ARTEMISIA ludoviciana (2)
Sotol, DASYLIRION spp. (1)
Spiderwort, TRADESCANTIA spp. (3)
Turks Cap, MALVAVISCUS arboreus (3)
Yarrow, ACHILLEA spp. (3)
YUCCA (2)
Zexmenia, WEDELIA hispida (1)

Shrubs

ABELIA spp. (3)
Agarito, BERBERIS trifoliata (1)
AGAVE
Barberry, BERBERIS (pygmy not resistant) (1)
Bear Grass, NOLINA spp. (1)
Beautyberry, CALLICARPA americana (1)
Buckeye, AESCULUS pavia (3)
Butterfly Bush, BUDDLEIA (3)
CASSIA spp. (3)
Cast Iron Plant, ASIDISTRA (3)
Cacuts (1)
Cenizo, LEUCOPHYLLUM frutescens (1)
Cherry Sage (3)
COTONEASTER (3)
Dwf. Chinese Holly, ILEX (1)
Dwf. Yaupon, ILEX (stokes variety) (1)
ELEAGNUS (3)
Evergreen Sumac, RHUS virens (1)
Germander, TEUCRIUM fruticans (3)
HYPERICUM (3)
Junipers (most varieties) (1)
Kidneywood, EYSENHARDTIA texana (3)
Mistflower, EUPATORIUM (1)
Mexican Oregano, POLIOMINTHA longiflora (1)
Mountain Laurel, SOPHORA secundiflora
NANDINA nana and domestica (3)
Oleander, NERIUM (1)
Pampas Grass, CORTADERIA selloana (1)
Prickly Pear Cactus (1)
Privet (3)
PYRACANTHA spp. (1)
Red Yucca, HESPERALOE parviflora (3)
Rosemary, ROSMARINUS officinalis (1)
SALVIA greggii (red) (3)
SALVIA leucantha (1)
SANTOLINA (1)
Sotol, DASYLIRION (2)
SPIREA (3)
Sumac, RHUS spp. (1)
Texas Persimmon, DIOSPYROS texana (1)
Texas Sage, LEUCOPHYLLUM frutescens (1)
VIBURNUM (1)
Wax Myrtle, MYRICA cerifera (1)
Yaupon, ILEX (Use Stokes, not Strahn) (1)
Yew Pine, PODOCARPUS macrophyllus (1)
YUCCA

Trees

Anacacho Orchid (1)
Ash, FRAXINUS spp. (1)

Bald Cypress, TAXODIUM distichurn (1)
Bois d'arc (1)
Cedar Elm (1)
Chaste Tree, VITEX spp. (1)
Cherry Laurel, PRUNUS caroliniana (1)
Crepe Myrtle (old varieties) (1)
Deodora Cedar (1)
Elm (all varieties) (1)
Fig, FICUS spp. (1)
Juniper (1)
Maple, ACER grandidentatum (1)
Mesquite, PROSOPIS (beans eaten) (1)
Mexican Persimmon, DIOSPYROS texana (1)
Mexican Plum, PRUNUS mexicana (1)
Mountain Laurel (1)
Oaks, QUERCUS spp. (1)
Palm (all varieties) (1)
Pecan (1)
Pine (3)
Possum Haw, ILEX decidua (1)
Redbud (Eastern & Mexican nibbled) (3)
Retama (3)
Smoke Tree, COTINUS obovatus (1)
Sumac, RHUS spp. (1)
Walnut (1)
Yaupon, ILEX vomitoria (1)

Vines & Groundcovers

AJUGA (3)
Asiatic Jasmine (1)
Carolina Jessamine (3)
CLEMATIS (3)
Confederate Jasmine (3)
Cross Vine (1)
English & Algerian Ivy (1)
Ferns (3)
Fig Ivy (3)
Honeysuckle (Coral & Purple nibbled less) (3)
Liriope (4)
Monkey Grass (3)
Muhly Grass (3)
SANTOLINA (1)
VERBENA (3)
Virginia Creeper (3)
WISTERIA (3)
Yarrow (3)

Appendix S

The Value of Dead and Down Wood

by John M. Davis, Urban Biologist
TX. Parks and Wildlife Department

In a healthy forested area, there are trees that are in many different stages of life. There are young trees, mature trees, old trees, and dead trees. Most everyone understands the value of living trees. They provide shade, homes for wildlife, and increase property values. However, many people don't understand the value of dead trees. Dead trees (or "snags") are caused many different factors. Natural processes such as wind, fire, flooding, drought, disease, and old age all function as natural controls on tree populations. Tree mortality is a natural process. (Unfortunately, many processes of man such as overwatering, construction damage to root zones, root suffocation, herbicides, etc., contribute unnaturally to the death of trees.)

Typically society wants to remove snags. We seem to think that once a tree has died, it is no longer useful and should be removed. That, however, is not the case. Standing snags and fallen logs are extremely valuable to the forest ecosystem.

Wildlife Benefits of Standing Dead Trees (Snags)

Many different species of wildlife rely heavily on snags to survive (see the attached list). While some woodpeckers nest in cavities excavated in living trees, many of them nest only in cavities excavated in snags. Without snags, these woodpeckers can't exist. Once cavities are excavated, used, and abandoned by woodpeckers, secondary cavity-nesters move in. These birds include: Chickadees, Titmice, Wrens, and Bluebirds. In addition to excavated cavities, the often hollow trunks and limbs of snags provide excellent homes for owls, raccoons, squirrels, and certain species of bats.

Wildlife Benefits of Fallen Logs

The shelter provided by logs on the forest floor is also valuable to many different species of wildlife (see the attached list). Many different types of invertebrates, reptiles, amphibians, and mammals can be found on, in, or under fallen logs. These logs may used as nesting sites, feeding sites, or escape cover. Fireflies require decaying logs to complete their life cycle. Without fallen logs, many of these animals could not exist. This is important because these animals form much of the foundation of the food web. Without them, hawks, owls, and other interesting animals would not be able to survive.

Nutrient Cycling Benefits of Fallen Logs

When a dead tree or limb falls to the ground, fungi, invertebrates, and other decomposers accelerate the process of decomposition. These decomposers disassemble the complex chemical structure of the wood and release nutrients back into the soil. Without this process, the forest ecosystem would have no way of recycling its

nutrients. The newly available nutrients are then taken up by the living vegetation and life benefits from death.

Management Recommendations

Dead and down woody material is certainly valuable to wildlife and the forested ecosystem, but there may be situations that require human action to maximize the usefulness of snags and fallen logs while minimizing any drawbacks. If the snag is located away from structures or walkways, then it can be left alone with no serious drawbacks. However, if the snag is near a structure, driveway, or walkway, then steps should be taken to reduce the risk of the trunk or limbs falling on them, causing damage to people or property.

The height of the tree determines the radius that could be affected should any part of the tree fall. For example, if a 30 foot tree falls, then anything within a 30 foot radius of the tree could be affected. To reduce the risk of damage, you can "limb" the tree or remove the major limbs leaving only the main trunk standing. You may also consider "topping" the snag or removing just enough of the top so that it does not extend beyond the height of surrounding trees. (Hire a professional to do this. It is not a job for someone without the right equipment.) Both of these techniques will reduce the wind stress on the snag, thus allowing it to stand longer.

Although fallen trees and limbs are valuable to wildlife and the forest itself, they may appear unsightly to some people. To minimize this, simply cut the multi-branched limbs into smaller sections and scatter them on the forest floor. If this practice is not satisfactory, you may create lots of small "criss-crossed" stacks of limbs located throughout the property or simply hide the limb sections within shrubbery. These practices will eliminate unsightliness while allowing the decaying wood to serve its purpose.

For large logs, you may consider splitting them and laying them on the forest floor with the flat side in contact with the soil. This isn't necessary as the log will decay by itself. However, doing this will create more surface area in contact with the soil. This will provide more shelter for wildlife and allow fungi and decomposers to disassemble the wood more quickly.

Because dead and down woody material is extremely valuable for many species of wildlife, it is often recommended that snags be "created" if none exist in the area. To do this, carefully select a tree and "girdle" it. To girdle a tree, you simply cut a ring into the base of the tree that is about an inch deep and an inch wide at the bark. Since it is only the outer rim of the tree that is alive and transporting nutrients, cutting this section will kill the standing portion of the tree. Depending on the species, the roots may or may not remain alive and re-sprout. When selecting the tree to girdle, consider those that are not native to the area, are short lived, or are undesirable for some other reason. Remember to also consider the tree's proximity to structures, driveways, etc. before girdling it.

Finally, it is important to help others understand the value of dead and down woody material. Educating others will not only help them understand why snags and logs are needed by wildlife, but will also help them to understand the actions of those who are employing the management practices previously described.

Species in North Central Texas That Will Use Standing Snags

***** Denotes non-native

Common Name	Scientific Name	Uses Excavated Cavities	Uses Hollow Trunk or Limbs	Nests in Crotch of Snag
Wood Duck	*Aix sponsa*	x	x	
American Kestrel	*Falco sparverius*	x	x	
Barn Owl	*Tyto alba*		x	
Eastern Screech Owl	*Otus asio*	x	x	
Great Horned Owl	*Bubo virginianus*		x	x
Barred Owl	*Strix varia*		x	
Red-headed Woodpecker	*Melanerpes erythrocephalus*	x		
Red-bellied Woodpecker	*Melanerpes carolinus*	x		
Downy Woodpecker	*Picoides pubescens*	x		
Ladder-backed Woodpecker	*Picoides scalaris*	x		
Hairy Woodpecker	*Picoides villosus*	x		
Northern Flicker	*Colaptes auratus*	x		
Great Crested Flycatcher	*Myiarchus crinitus*	x	x	
Carolina Chickadee	*Parus carolinensis*	x	x	
Tufted Titmouse	*Parus bicolor*	x	x	
Carolina Wren	*Thyrothorus ludovicianus*	x	x	x
Bewick's Wren	*Thryomanes bewickii*	x	x	
Eastern Bluebird	*Sialia sialis*	x	x	
* European Starling	*Sturnus vulgaris*	x	x	
* English Sparrow	*Passer domesticus*	x	x	
Prothonotary Warbler	*Protonotaria citrea*	x	x	
Big Brown Bat	*Eptesicus fuscus*		x	
Evening Bat	*Nycticeius h. humeralis*		x	
Silver-haired Bat	*Laionycteris noctivagans*		x	
Brazilian Free-tailed Bat	*Tadarida braziliensis*		x	
Eastern Flying Squirrel	*Glaucomys volans*	x	x	
Eastern Fox Squirrel	*Sciurus niger*		x	
White-footed Mouse	*Peromyscus leucopus*		x	
Gray Fox	*Urocyon cinereoargenteus*		x	
Ringtail	*Bassariscus astutus*		x	
Raccoon	*Procyon lotor*		x	
Long-tailed Weasel	*Mustela frenata*		x	
Eastern Spotted Skunk	*Spilogale putorious*		x	

Appendix T

SUNFLOWERS FOR WILDLIFE IN THE CROSS TIMBERS

by
Jim Dillard, Technical Guidance Biologist (Retired)
Texas Parks & Wildlife Department, Mineral Wells

North Texas is home of two native species of sunflowers that have important value to wildlife. Where they occur, these members of the Daisy Family Compositae provide cover and food for a wide variety of wildlife species. Although there are many plant species in this large family that also provide important food and cover sources for wildlife, management of the **annual sunflower** and **Maximilian sunflower** in the **Cross Timbers & Prairies Region of Texas** offers landowners the opportunity to economically produce and sustain these plants on an annual basis to benefit wildlife. These true sunflower species of the genus *Helianthus* are adapted to the rainfall, climatic extremes and varieties of soils found in the Cross Timbers and Prairies Region, making establishment and maintenance of these two plants a natural choice for many landowners. These species can be grown and managed on small or large tracts of land.

Native annual sunflowers are commonly found along roadside ditches and field borders, in cultivated fields and on other disturbed soil sites primarily in the western 2/3 of Texas and from Canada to Mexico. Often considered a nuisance weed in farming country and on rangelands, their overall value to wildlife is significantly beneficial. The myriad of insects found on sunflowers provide food for insectivorous species such as neotropical and native songbirds, bobwhite quail, and Rio Grande turkeys. Their high oil content also provides birds an excellent source of energy for body maintenance. Dense stands provide overhead screening cover for ground dwelling wildlife species. The late summer and early fall blooming **Maximilian sunflower** has value as a forage plant for livestock and deer and is a source of cover and seeds for many songbirds and small mammals. Both species can be propagated from seed or managed as naturally occurring plants on the landscape. The following information is provided for landowners who have an interest in producing or managing these sunflowers species or enhancing habitat for wildlife in the **Cross Timbers & Prairies Region of North Texas.**

ANNUAL SUNFLOWERS

Annual sunflower (*Helianthus annuus*) is a native, warm season, tap-rooted annual forb that was used and domesticated by pre-Columbian Indians of Central North America around 1000 B.C. and spread eastward. In 1510 the Spaniards encountered it along the Atlantic coastal areas and carried seeds back to Europe where they were

grown in gardens or as curiosities. Sometime before 1800 it reached Russia where it was raised for food and later, through selective breeding, the giant one-headed, large-seeded plants were developed. Subsequent breeding has produced a number of varieties with high oil content for commercial crop production. In 1991, 2.7 million acres were grown in the U.S. with 85% being oilseed varieties and the rest used for confectionery purposes. Sunflower seeds used as a snack food has increased in recent years.

Native annual sunflowers reproduce by seeds only and grow to variable heights from 1-14 feet, depending on soil moisture. Their leaves are sticky, dark green, and alternately arranged on the stalk. Shapes range from broad and ovate or almost triangular with rough hairs or bristles and toothed margins. The 1-5 inch flower heads have 20-25 1-2 inch long bright yellow rays that surround the central brown or reddish brown disk flowers where seeds are produced. Multiple seed heads grow from rough, branching stems. Seeds are 1/8 to1/4 inches long, ovate to wedge-shaped, slightly four-angled and flattened. Color ranges from gray to dark brown with light stripes or spots. There are approximately 350,000 seeds per pound. Seeds may remain viable in the soil for many years until conditions are optimum for germination. Dormancy of native annual sunflower seeds is influenced by their depth in the soil, soil moisture, cold winter temperatures and their high resin content. Native annual sunflowers have a chemical inhibitor called auxin that is on the caropisis (meat) of the seed that must be broken down by cool temperatures and adequate moisture. This ability to remain dormant often results in growths of annual sunflowers in areas where soil disturbance have occurred and no seeds were planted. Native annual sunflowers are very drought tolerant.

GROWING NATIVE ANNUAL SUNFLOWERS

Initial plantings of **native annual sunflowers** should be conducted during the **fall** or **early winter** in a well prepared seedbed for growth during the following spring and summer. Plant at the rate of **3-5 pounds per acre** for pure stands and at a **depth of 1 inch or less** using a seed drill. Native annual sunflower seeds may also be planted along with winter wheat, oats, rye or other small grains in a mix. Sunflowers will begin to germinate as these cool season small grains mature and die back during late spring and early summer. In subsequent years where a stand of sunflowers has been established, lightly plow or disk between October and January for the next year's growth. If winter small grains are to be planted during the fall or early winter where sunflowers are established, no additional sunflowers seed should be added and the cultivation associated with these plantings will also replant existing native annual sunflower seeds. Grazing small grain plantings by cattle will also help incorporate sunflower seeds into the soil. Native annual sunflowers planted during the spring will germinate at the rate of only about 2% to 5% but may germinate the following year if conditions are right. Check for locally available seed sources well in advance to determine seasonal availability and price. Be sure you ask for "native annual sunflowers". Annual sunflowers are not a preferred forage plant for cattle or white-tailed deer.

Many old fields or croplands taken out of crop production contain a diverse seed bank in the soil including annual native sunflowers. Disking or other soil disturbance operations in such areas during late fall and winter often results in vigorous growth of annual sunflowers the following spring and summer. Fallow winter disking is the most economical method for growing native annual sunflowers and many other native annual seed producing plants used by wildlife.

HYBRID BLACK OILSEED SUNFLOWERS

Hybrid black oilseed sunflower is an improved variety of the native annual sunflower with a high oil content and grown primarily for its oil. This variety is also very nutritious for birds and provides a good source of energy. It is often used in bird feeders or mixed with other grains for feeding birds. Over 40 species of birds are know to eat black oilseed sunflowers. Hybrid black oilseed sunflowers may be planted during the **spring** at the rate of **3-5 pounds per acre** but must be replanted annually. Growth is 3-4 ft. in height with a single seed head. For wildlife plantings, it is less preferred over annual native sunflowers and requires cultivation for good growth.

MAXIMILIAN SUNFLOWERS

Maximilian sunflower (*Helianthus maximiliani*) is a native, warm season rhizomatous perennial forb found in the eastern 2/3 of Texas. It also occurs from the plains and prairies of southern Canada to South Texas and eastward. It was named for Prince Maximilian of Wied Neuweid, a naturalist who made scientific explorations in North America from 1832-1834. Depending on moisture, it grows from 2 to 10 feet tall and reproduces from seeds and short underground stems. Stout and rough annual stems rise from the perennial root crown or woody root system during late winter or early spring, often growing in clusters from moist ditches or depressions in prairies or rangelands. Leaves are characteristically long (up to 10 inches), narrow and drooping with a rough surface texture and gray-green coloration. During dry conditions, leaves fold inward toward the center. The 3-4 inch yellow flowers appear in dense clusters along the upper half of the stem on short stalks during late summer from July through October, producing numerous four-angled achenes with flat seeds inside that are approximately 1/4 inches long.

Maximilian sunflowers spread and may form dense clusters that provide habitat for insects and cover for wildlife. Its seeds are a good food source for many songbirds and small mammals. They are grazed by livestock and white-tailed deer, particularly during the early growth stages and may disappear or be severely diminished with heavy grazing pressure or high deer numbers. The presence of Maximilian sunflowers on native rangeland is indicative of good range conditions and management. It benefits from rotation grazing systems where periods of rest from grazing prevents heavy use or total elimination of individual plants.

GROWING MAXIMILIAN SUNFLOWERS

Aztec Maximilian Sunflower is a variety released from the USDA Natural Resources Conservation Service's Knox City Plant Materials Center in 1978. It may be planted in **range seeding mixtures** during the spring at approximately **¼ to ½ pound per acre** to a depth of **3/8 to ½ inches**. It should be planted on a well prepared seed bed cultivated during the previous fall to reduce weed growth. It is adapted to a variety of soil types from sands to clays in areas receiving at least 18 inches of rainfall annually. Removal of the previous year's growth by late winter mowing may increase production the following spring. Excessive grazing by livestock or deer may prevent establishment. **Pure stands** of Maximilian sunflowers planted in rows or strips benefit from light fertilization and should be planted at the rate of **1 pound per acre in 36 inch rows** or **drilled or broadcast at 3 pounds per acre**. On a smaller scale, individual plants may be hand dug during early spring and transplanted, being sure to include a sufficient amount of the root system. Remove old top growth from the previous year and water regularly until growth occurs.

Existing native Maximilian sunflowers plants may be heavily grazed by cattle with unrestricted access to growing young plants during the spring and summer months. Dense stands of this species are often found along roadside or other protected areas where fencing restricts grazing. Use of rotation grazing or fencing of areas containing Maximilian sunflowers to exclude cattle during the growing season may help promote this plant for seed production and cover. Late winter mowing of standing stems will also help stimulate regrowth during the spring.

WILDLIFE USE OF SUNFLOWERS

Mourning Doves Annual native sunflowers provide a major source of food for resident and migratory mourning doves throughout the Cross Timbers & Prairies Region. Large fields may attract concentrations of doves for short periods of time during the late summer and fall and provide excellent sport hunting opportunities. In small grain producing areas, timing of soil preparations for planting winter wheat has a significant impact on sunflower seed availability to migrating mourning doves. Cultivation of fields containing sunflowers during late August and September makes sunflower seed unavailable to doves and other seed eating wildlife species and may contributes to movement to other feeding areas. Delaying fall plowing until mid-October will greatly improve sunflower seed availability to doves. To facilitate access and feeding by mourning doves, strips should be mowed through sunflower fields during late summer to create openings and shatter mature seeds. Mowed strip widths may vary, depending on the size of the field, but generally should be twice the width of the unmowed strips (i.e. 200 ft. mowed X 100 ft. unmowed).

Bobwhite Quail Bobwhite quail eat native annual sunflower seed that shatter to the ground, providing a source of food over an extended period of time during the fall and winter months. Weed patches along fence lines, field borders, roadsides and other out areas containing stands of annual and Maximilian sunflowers provide important overhead screening cover and feeding security from predators. Young growing native

annual and Maximilian sunflower plants also sustain populations of a variety of insects and other arthropods eaten by bobwhites and provide bugging area for quail chicks.

Songbirds and Small Mammals Both sunflower species provide seeds for a wide variety of seed-eating songbirds and small mammals. Some bird species will feed on the seed heads of mature standing annual and Maximilian sunflowers while other locate shattered seeds on the ground. Seed eating species such as sparrows (house, grasshopper, Harris, lark, Lincoln, savannah, tree, vesper, white-crowned and others), house and gold finches, pine siskins, blackbirds, chickadees, nuthatches, titmouse, meadowlarks, grackles, buntings and others are know to eat native sunflower seeds. Small mammals including pocket gophers, ground squirrels, and other native rat and mouse species also eat the seeds, often stashing them in caches in their dens or burrows for later consumption.

White-tailed Deer White-tailed deer will eat the leaves of young Maximilian sunflower plants but tend to discontinue use as plants mature. Annual sunflowers are not a preferred forage plant for deer but they may consume young tender leaves and developing seed heads.

CONCLUSION

Growing or managing growth of annual native and Maximilian sunflowers contributes to the diversity of herbaceous vegetation on the land and provides seasonal food and cover for various wildlife species found in the **Cross Timbers & Prairies Region of Texas**. Whether planted and grown in food plots, added to cool season forage mixes, seeded on rangelands or stimulated from timely soil disturbance practices, these two naturally adapted native species should be considered in wildlife habitat enhancement projects. For additional information on growing sunflowers, contact Texas Parks and Wildlife Department, Natural Resources Conservation Service, Texas Agricultural Extension Service and local seed companies.

Texas Parks and Wildlife Department's Private Lands and Public Hunting Program has a staff of 10 regional technical guidance wildlife biologists and other district wildlife biologists who are available upon written request to help landowners develop management plans to address their long term goals and objectives for habitat enhancement and wildlife management. For more information, contact Texas Parks and Wildlife Department, 4200 Smith School Rd. Austin, TX 78744

Appendix U

FORMS

Forms contained in this appendix include:

PWD 153-7100-10/03: Landowner Request for Technical Assistance. Landowners desiring technical assistance from Texas Parks and Wildlife Department should fill in this form and mail it to their local biologist.

PWD 885-W7000: 1-d-1 Open Space Agricultural Valuation Wildlife Management Plan. Landowners wishing to manage their property for wildlife as their agricultural practice must fill in and attach this form to their **1-d-1 Open Space Agricultural Valuation Application** form that is available from the county Central Appraisal District. *Do not return this form to Texas Parks and Wildlife Department.*

PWD 885-W7000: 1-d-1 Open Space Agricultural Valuation Annual Reporting Form. This form is not automatically required. For counties requesting a landowner report on wildlife management activities, this form will be provided to the landowner by the Chief Appraiser. *Do not return this form to Texas Parks and Wildlife Department.*

LANDOWNER REQUEST FOR TECHNICAL GUIDANCE

1. I hereby request technical assistance of the Texas Parks and Wildlife Department, Wildlife Division field staff, in my efforts to enhance habitat and manage wildlife populations on lands under my control.

2. Permission is granted to the Texas Parks and Wildlife Department, Wildlife Division field staff, to enter upon these lands and conduct, at a mutually agreeable time, wildlife and habitat inventories which may include the use of ground vehicles, aircraft, or nighttime spotlight counts to gather data necessary for the development of management recommendations.

Section 12.0251 of the Parks and Wildlife Code provides that information collected in response to a landowner request for technical guidance on private land relating to the specific location, species identification or quantity of any animal or plant life is confidential and may not be disclosed. The Department may release game census, harvest, habitat or program information if the information is summarized in a manner that prevents the identification of an individual or specific parcel of land and the landowner.

3. I understand that recommendations will be provided to me in the form of oral and/or written guidelines, which are non-binding and voluntary on my part. By my signature, I certify that I am the owner of the below-described property or that I have been specifically authorized by the landowner to act as their agent in this matter.

Signed:_____

Landowner or Authorized Agent Date

Name of Property:_____

County:_____Acres:_____

City, State, Zip:_____

Phone Number(s):

Home:_____Office:_____Other_____

Title V Compliance: The Texas Parks and Wildlife Department provides this service to land managers without discrimination in respect to race, color, national origin, age or handicap.

Texas Parks and Wildlife Department maintains the information collected through this form. With few exceptions, you are entitled to be informed about the information we collect. Under Sections 552.021 and 553.023 of the Texas Government Code, you are also entitled to receive and review the information. Under Section 559.004, you are also entitled to have this information corrected. For assistance call 512-389-4959.

Form PWD 885-W7000
1-D-1 Open Space Agricultural Valuation Wildlife Management Plan

Instructions

This form is intended for use by landowners wishing to manage for wildlife under the 1-d-1 Open Space Agricultural Valuation. In order to be eligible, the property must already have a 1-d-1 Open Space Agricultural Valuation.

This form is intended to accompany the 1-d-1 Open Space Agricultural Valuation Form that can be obtained from your county Central Appraisal District.

Submit all completed applications to your county Central Appraisal District between January 1 and May 1 of each tax year. For further assistance with this form, contact your local office of Texas Parks and Wildlife Department.

DO NOT SUBMIT THIS FORM TO TEXAS PARKS AND WILDLIFE DEPARTMENT. Any forms received by Texas Parks and Wildlife Department will be returned.

1-D-1 Open Space Agricultural Valuation
Wildlife Management Plan for the Year (s)_ ____

Submit this plan to your County Tax Appraiser, not to Texas Parks and Wildlife

Part I. Owner Information **Account Number:** _____

Owner's Name: _____

Current mailing address: _____

City, town, post office, state and zip code: _____

Phone number: _____

Tract Name: _____ Majority County: _____

Additional Counties (if any): _____

Part II. P Property Description

Legal Description of Property:

Location of Property (distance and direction from nearest town; specify highway/road numbers):

Is Acreage under high fence: ☐ Yes ☐ No ☐ Partial: (Describe) _____

Total Acreage: _____ Ecoregion _____

Habitat Types and Amounts of Acres: *(refer to Comprehensive Wildlife Management Planning Guidelines)*

☐ Cropland _____ ☐ Bottomland/Riparian ☐ wetlands _____

☐ Non-native Pasture _____ ☐ Native Pasture/Grassland ☐ timberlands _____

☐ Native Range/Brush _____ ☐ Other (describe) _____

III. Species targeted for management. (List all that apply. Attach additional page(s) if needed)

☐ Deer ☐ turkey ☐ quail ☐ songbirds ☐ waterfowl ☐ doves ☐ bats

☐ Neotropical songbirds (List) _____

☐ Reptiles (list) _____ ☐ Amphibians (list) _____

☐ Small mammals (list) _____ ☐ Insects (list) _____

☐ Identified species of concern (List) _____

☐ Other (List) _____

Part IV. Management Plan Goals and Objectives

Describe the wildlife management ***goals*** (*what you want the property to look like, or want to be able to do with it*) and ***objectives*** (*how you intend to achieve these goals)* for this piece of property. You may use an additional page if needed. (Note: This space will expand as you type.)

Part V. Qualifying Wildlife Management Activities

Check the wildlife management practices to be implemented on the property during the coming year that will support and achieve your management goals. A minimum of three practices is required.

- ☐ Habitat control
- ☐ Erosion control
- ☐ Predator control
- ☐ Making census counts to determine population.
- ☐ Provide supplemental supplies of water
- ☐ Provide supplemental supplies of food
- ☐ Provide shelters

Part VI. White tail Deer and Mule Deer Population Management

Is hunting to be a part of this wildlife management plan? ☐ Yes ☐ No

If YES, type of hunting: ☐Lease hunting ☐ Family/guests only ☐Both

List deer harvest for past three seasons:

Year: _____ Bucks: _____ Does: _____

Year: _____ Bucks: _____ Does: _____

Year: _____ Bucks: _____ Does: _____

Population Management Goals:

Target Density for Pre-season Deer Population (fall density) _____

Target Sex Ratio (does/buck): _____

Target Production (fawns/doe): _____

Other (may be age, weight, antler measurements, browse conditions, etc.

_____

Deer Harvest Strategy (numbers, types of deer to be harvested to achieve goals):

_____

Part VII. Wildlife Management Association Membership

Are you a member of a wildlife management association (co-op)? ☐ Yes ☐ No

Are you a member of a wildlife property association? ☐ Yes ☐ No

Name of wildlife property co-op/association, if YES is checked. _____

Part VIII. Wildlife Management Activities

Check the activities you intend to implement during the year to support each of the wildlife management activities listed in Part V.

1. HABITAT CONTROL

☐ *Grazing management*. Check grazing system being utilized.

☐ 1 herd/3pasture ☐ 1 herd/4 pasture ☐ 1 herd/multiple pasture

☐ High intensity/low frequency (HILF) ☐ Short duration system

☐ Other type of grazing system (describe)

_____

☐ *Prescribed Burning*

Acres to be burned: _____ Planned burn date: _____

☐ *Range Enhancement (Range Reseeding)*

Acres to be seeded: Date to be seeded:

Seeding Method: ☐ Broadcast ☐ Drilled ☐ Native Hay

Seeding mixture to be used:

Fertilized: ☐ Yes ☐ No

Weed control needed for establishment? ☐ Yes ☐ No

☐ *Brush Management*. Acres to be treated: _____ Check method of brush management:

☐ Mechanical

☐ grubber ☐ chain ☐ roller chopper/aerator ☐ rhome disc

☐ brush hog (shredder) ☐ dozer ☐ hand-cutting (chainsaw)

☐ hydraulic shears ☐ other (describe): _____

☐ Chemical Kind: _____ Rate: _____

☐ Brush management design:

☐ block ☐ mosaic ☐ strips: width: _____ Length: _____

☐ *Fence Modification*

Target species: ☐ pronghorn antelope ☐ bighorn sheep

Technique: ☐ fold up bottom of net-wire Gap width: _____

☐ replace sections of net-wire with barbed wire. Gap width: _____

Miles of fencing that will be modified: _____

☐ replace entire net-wire fence with barbed wire. Miles replaced: _____

☐ *Riparian management and enhancement*

☐ Fencing of riparian area

☐ Complete fencing ☐ Partial fencing

☐ Deferment from livestock grazing

☐ Complete deferment ☐ partial deferment Season deferred : _____

☐ Establish vegetation

☐ Trees (list species) _____

☐ Shrubs (list species) _____

☐ Herbaceous species (list) _____

☐ *Wetland enhancement*

☐ Provide seasonal water ☐ Provide permanent water ☐ Moist soil management

☐ Other (describe) _____

☐ *Habitat Protection for species of concern*

☐ Fencing ☐ Firebreaks ☐ Prescribed burning ☐ Control of nest parasites

☐ Habitat manipulation (thinning, etc.) ☐ Native/exotic ungulate control

☐ Other (describe) _____

☐ *Prescribed Control of Native, Exotic and Feral Species*

☐ Prescribed control of vegetation ☐ Prescribed control of animal species

☐ Species being controlled: _____

☐ Method of control: _____

☐ *Wildlife Restoration*

☐ Habitat restoration ☐ Wildlife restoration

☐ Target species: _____

☐ Method of restoration: _____

2. EROSION CONTROL

☐ *Pond construction and repair*

Surface area (acres): _____ Number of cubic yards of soil displaced: _____

Length of dam (feet): _____ Planned date of construction: _____

☐ *Gully shaping*

Total acres to be treated: _____ Acres treated annually: _____

Seeding mix used for reestablishment of vegetation: _____

Planned date of construction: _____

☐ *Streamside, pond, and wetland revegetation.* Techniques used:

☐ Native hay bales ☐ Fencing ☐ Filter strips ☐ Seeding upland buffer

☐ Rip-rap, etc. ☐ stream crossings ☐

Other: _____

Planned date of construction: _____

☐ *Herbaceous and/or woody plant establishment on critical areas (erodible)*

☐ Establish windbreak ☐ Establish shrub mottes ☐ Improve plant diversity

☐ Improve wildlife habitat ☐ Conservation/no-till practices ☐ Manage CRP cover

☐ *Dike/Levee Construction/Management*

☐ Reshaping/repairing erosion damage ☐ Revegetating/stabilize levee areas

☐ Install water control structure ☐ Fencing

☐ *Establish water diversion*

Type: ☐ Channel ☐ Ridge

Slope: ☐ level ☐ graded Length (feet) _____

Vegetated: ☐ No ☐ YES

If YES: ☐ Native: _____ ☐Crop: _____

3. PREDATOR CONTROL

☐ Imported red fire ants ☐ Control of cowbirds ☐ Grackle/starling/house sparrow control

Method of control: ☐ Trapping ☐ Shooting ☐ Baiting ☐ Scare tactics: _____

☐ Coyotes ☐ Feral hogs ☐ Raccoon ☐ Skunk ☐ Bobcat ☐ Mountain lion

☐ Rat snakes ☐ Feral cats/dogs

Method of control: ☐ Trapping ☐ Shooting ☐ M-44 (licensed applicators)

☐ Poison collars (1080 certified, licensed, applicator) ☐ Other _____

4. SUPPLEMENTAL WATER

☐ *Marsh/Wetland Restoration or Development*

☐ Greentree reservoirs ☐ Shallow roost pond development ☐ Seasonally flooded crops

☐ Artificially created wetlands ☐ Marsh restoration/development/protection

☐ Prairie pothole restoration/development/protection ☐ Moist soil management units

Planned date of construction: _____

☐ *Well/trough/windmill overflow/other wildlife watering facilities*

☐ Drill new well Depth: _____ Gallons per minute: _____

☐ Windmill ☐ Pump ☐ Pipeline: Size _____ Length: _____

☐ Modification(s) of existing water source

☐ Fencing ☐ Overflow ☐ Trough modification ☐ Pipeline

Distance between water sources (waterers): _____

Type of wildlife watering facility

☐ PVC pipe facility	# _____	☐ Drum with faucet or float	# _____
☐ Small game guzzler	# _____	☐ Windmill supply pipe dripper	# _____
☐ Plastic container	# _____	☐ In-ground bowl trough	# _____
☐ Big game guzzler	# _____	☐ Inverted umbrella guzzler	# _____
☐ Flying saucer guzzler	# _____	☐ Ranch Specialties guzzler	# _____

☐ Other: _____

☐ *Spring development and/or enhancement*

☐ Fencing ☐ Water diversion/pipeline ☐ Brush removal ☐ Spring clean out

☐ Other: _____

5. PROVIDING SUPPLEMENTAL FOOD

☐ Grazing management ☐ Prescribed burning ☐ Range enhancement

☐ Food plots Size: _____ Fenced: ☐ Yes ☐ No

Irrigated: ☐ Yes ☐ No

Plantings: ☐ Cool season annual crops: _____

☐ Warm season annual crops: _____

☐ Annual mix of native plants: _____

☐ perennial mix of native plants: _____

☐ *Feeders and mineral supplementation*

Purpose: ☐ Supplementation ☐ Harvesting of wildlife

Targeted wildlife species: _____

Feed type: _____ Mineral type: _____

Feeder type: _____ Number of feeders: _____

Method of mineral dispensing: _____

Number of mineral locations: _____

Year round: ☐ Yes ☐ No If not, state when: _____

☐ *Managing tame pasture, old fields and croplands*

☐ Overseeding cool and/or warm season legumes and/or small grains

☐ Periodic disturbance (Discing/Mowing/Shredding) ☐ Conservation/no-till

☐ *Transition management of tame grass monocultures*

☐ Overseed 25% of tame grass pastures with locally adapted legumes

Species planted: ☐ Clover ☐ Peas ☐ Vetch ☐ Other: _____

6. PROVIDING SUPPLEMENTAL SHELTER

☐ *Nest boxes* Target Species: _____

☐ Cavity type. # _____ ☐ Bat boxes. # _____ ☐ Raptor pole. # _____

☐ *Brush piles and slash retention*

☐ Type: ☐ Slash ☐ Brush piles Number per acre: _____

☐ *Fence line management* Length: _____ Initial establishment: ☐Yes ☐ No

Plant type established: ☐ Trees ☐ Shrubs ☐ Forbs ☐ Grasses

☐ *Hay meadow, pasture and cropland management for wildlife* Acres treated: _____

Shelter establishment: ☐ Roadside management ☐ Terrace/wind breaks ☐ Field borders

☐ shelterbelts ☐Conservation Reserve Program lands management

Type of vegetation: ☐ Annual ☐ Perennial

Species and percent of mixture _____

☐ Deferred mowing Period of deferment: _____

☐ Mowing Acres mowed annually: _____

☐ No till/minimum till

☐ *Half-cutting trees or shrubs*

Acreage to be treated annually: _____ Number of half-cuts annually: _____

☐ *Woody plant/shrub establishment*

Pattern: ☐ Block ☐ Mosaic ☐ Strips: Width: _____

Acreage or length established annually: _____ Spacing: _____

Shrub/tree species used: _____

☐ *Natural cavity/snag development*

Species of snag _____ Size of snags: _____ Number/acre _____

7. CENSUS

☐ *Spotlight counts* Targeted species: _____

Length of route: _____ Visibility of route _____

Dates (3 required) A. _____ B. _____ C. _____

☐ *Standardized incidental observations* Targeted species: _____

Observations from: ☐ Feeders ☐ Food plots ☐ Blinds ☐ Vehicle ☐ Other _____

Dates: _____

☐ *Stand counts of deer* (5 one hour counts per stand required). Number of stands: _____

Dates: _____

☐ *Aerial Counts* Species counted: _____

Type of survey: ☐ Helicopter ☐ Fixed-wing

Percent of area surveyed: ☐ Total ☐ 50% ☐ Other: _____

☐ *Track counts:* ☐ Predators ☐ Furbearers ☐ Deer ☐ Other: _____

☐ *Daylight deer herd/wildlife composition counts*

Species: ☐ Deer ☐ Turkey ☐ Dove ☐ Quail ☐ Other _____

☐ *Harvest data collection/record keeping*: ☐ Deer ☐ Game birds

☐ Age ☐ Weight ☐ Sex ☐ Antler data ☐ Harvest date

☐ *Browse utilization surveys* (thirty 12 foot circular plots required)

☐ *Census of endangered, threatened, or protected wildlife.* Species: _____

Method and dates: _____

☐ *Census and monitoring of nongame wildlife species.* Species: _____

Method and dates: _____

☐ *Miscellaneous Counts:* Species being counted: _____

☐ Remote detection (i.e. cameras) ☐ Hahn (walking) line ☐ Roost counts

☐ Booming ground counts ☐ Time/area counts ☐ Songbird transects and counts

☐ Quail call and covey counts ☐ Point counts ☐ Small mammal traps

☐ Drift fences and pitfall traps ☐ Bat departures ☐ Dove call counts

☐ Chachalaca counts ☐ Turkey hen/poult counts ☐ Waterfowl/water bird counts

☐ Alligator nest/census counts ☐ Other: _____

IX. Additional Supporting Information. (Optional)

Attach any other supporting information, such as maps or photographs that you believe to be relevant to this wildlife management plan.

I certify that the above information provided by me in this application is to the best of my knowledge and belief, true and complete.

_____ _____

Landowner Signature Date

This area for use only if the wildlife management plan was prepared for the above landowner for a fee by a wildlife professional or consultant. *

_____ _____

Signature of person preparing wildlife management plan. Date

_____ _____

Company Phone Number

_____

*Signature by TPW not required for this plan to be valid.

Texas Parks and Wildlife does not maintain the information collected through this form. This completed form is only provided to the County Tax Appraiser. Please inquire with your County Central Appraisal District on any local laws concerning any information collected through this form.

Form PWD 888-W7000
1-D-1 Open Space Agricultural Valuation
Annual Reporting Form

Instructions

This form is intended for distribution by the Chief Appraiser of each county to assist landowners in reporting work done towards fulfillment of the requirements for wildlife management under the 1-d-1 Open Space Agricultural Valuation.

At the discretion of the County desiring such a report, this form is intended to report on activities and practices undertaken by a landowner for no less than one year, and for no more than five years.

Submit all completed report forms to your county Central Appraisal District. For further assistance with this form, contact your local office of Texas Parks and Wildlife Department.

DO NOT SUBMIT THIS FORM TO TEXAS PARKS AND WILDLIFE DEPARTMENT. Any forms received by Texas Parks and Wildlife Department will be returned.

1-D-1 Open Space Agricultural Valuation
Wildlife Management Annual Report for the Years)_ ____

Submit this plan to your County Tax Appraiser, not to Texas Parks and Wildlife

Part I. Owner Information **Account Number:** _____

Owner's Name: _____

Current mailing address: _____

City, town, post office, state and zip code: _____

Phone number: _____

Tract Name: _____ Majority County: _____

Additional Counties (if any): _____

Part II. Qualifying Wildlife Management Activities

Check the wildlife management practices implemented on the property during the year being reported. A minimum of three practices is required.

☐ Habitat control

☐ Erosion control

☐ Predator control

☐ Making census counts to determine population.

☐ Provide supplemental supplies of water

☐ Provide supplemental supplies of food

☐ Provide shelters

Part III. Wildlife Management Association Membership

Are you a member of a wildlife property association? ☐ Yes ☐ No

Name of wildlife property co-op/association, if YES is checked. _____

Part IV. Wildlife Management Activities

Check the activities you have implemented during the year to support each of the wildlife management activities listed in Part II.

1. HABITAT CONTROL

☐ *Grazing management*. Check grazing system being utilized.

☐ 1 herd/3pasture ☐ 1 herd/4 pasture ☐ 1 herd/multiple pasture
☐ High intensity/low frequency (HILF) ☐ Short duration system
☐ Other type of grazing system (describe)

_____

☐ *Prescribed Burning*
Acres to be burned: _____ Planned burn date: _____

☐ *Range Enhancement (Range Reseeding)*
Acres to be seeded: Date to be seeded:
Seeding Method: ☐ Broadcast ☐ Drilled ☐ Native Hay
Seeding mixture to be used:
Fertilized: ☐ Yes ☐ No
Weed control needed for establishment? ☐ Yes ☐ No

☐ *Brush Management*. Acres to be treated: _____ Check method of brush management:
☐ Mechanical
☐ grubber ☐ chain ☐ roller chopper/aerator ☐ rhome disc
☐ brush hog (shredder) ☐ dozer ☐ hand-cutting (chainsaw)
☐ hydraulic shears ☐ other (describe): _____
☐ Chemical Kind: _____ Rate: _____
☐ Brush management design:
☐ block ☐ mosaic ☐ strips: width: _____ Length: _____

☐ *Fence Modification*
Target species: ☐ pronghorn antelope ☐ bighorn sheep
Technique: ☐ fold up bottom of net-wire Gap width: _____
☐ replace sections of net-wire with barbed wire. Gap width: _____
Miles of fencing that will be modified: _____
☐ replace entire net-wire fence with barbed wire. Miles replaced: _____

☐ *Riparian management and enhancement*

☐ Fencing of riparian area

☐ Complete fencing ☐ Partial fencing

☐ Deferment from livestock grazing

☐ Complete deferment ☐ partial deferment Season deferred : _____

☐ Establish vegetation

☐ Trees (list species) _____

☐ Shrubs (list species) _____

☐ Herbaceous species (list) _____

☐ *Wetland enhancement*

☐ Provide seasonal water ☐ Provide permanent water ☐ Moist soil management

☐ Other (describe) _____

☐ *Habitat Protection for species of concern*

☐ Fencing ☐ Firebreaks ☐ Prescribed burning ☐ Control of nest parasites

☐ Habitat manipulation (thinning, etc.) ☐ Native/exotic ungulate control

☐ Other (describe) _____

☐ *Prescribed Control of Native, Exotic and Feral Species*

☐ Prescribed control of vegetation ☐ Prescribed control of animal species

☐ Species being controlled: _____

☐ Method of control: _____

☐ *Wildlife Restoration*

☐ Habitat restoration ☐ Wildlife restoration

☐ Target species: _____

☐ Method of restoration: _____

2. EROSION CONTROL

☐ *Pond construction and repair*

Surface area (acres): _____

Length of dam (feet): _____

☐ *Gully shaping*

Total acres to be treated: _____ Acres treated annually: _____

Seeding mix used for reestablishment of vegetation: _____

Planned date of construction: _____

☐ *Streamside, pond, and wetland revegetation.* Techniques used:

☐ Native hay bales ☐ Fencing ☐ Filter strips ☐ Seeding upland buffer

☐ Rip-rap, etc. ☐ stream crossings ☐ Other: _____

Planned date of construction: _____

☐ *Herbaceous and/or woody plant establishment on critical areas (erodible)*

☐ Establish windbreak ☐ Establish shrub mottes ☐ Improve plant diversity

☐ Improve wildlife habitat ☐ Conservation/no-till practices ☐ Manage CRP cover

☐ *Dike/Levee Construction/Management*

☐ Reshaping/repairing erosion damage ☐ Revegetating/stabilize levee areas

☐ Install water control structure ☐ Fencing

☐ *Establish water diversion*

Type: ☐ Channel ☐ Ridge

Slope: ☐ level ☐ graded Length (feet) _____

Vegetated: ☐ No ☐ YES

If YES: ☐ Native: _____ ☐Crop: _____

3. PREDATOR CONTROL

☐ Imported red fire ants ☐ Control of cowbirds ☐ Grackle/starling/house sparrow control

Method of control: ☐ Trapping ☐ Shooting ☐ Baiting ☐ Scare tactics: _____

☐ Coyotes ☐ Feral hogs ☐ Raccoon ☐ Skunk ☐ Bobcat ☐ Mountain lion

☐ Rat snakes ☐ Feral cats/dogs

Method of control: ☐ Trapping ☐ Shooting ☐ M-44 (licensed applicators)

☐ Poison collars (1080 certified, licensed, applicator) ☐ Other _____

4. SUPPLEMENTAL WATER

☐ *Marsh/Wetland Restoration or Development*

☐ Greentree reservoirs ☐ Shallow roost pond development ☐ Seasonally flooded crops

☐ Artificially created wetlands ☐ Marsh restoration/development/protection

☐ Prairie pothole restoration/development/protection ☐ Moist soil management units

Planned date of construction: _____

☐ *Well/trough/windmill overflow/other wildlife watering facilities*

☐ Drill new well Depth: _____ Gallons per minute: _____

☐ Windmill ☐ Pump ☐ Pipeline: Size _____ Length: _____

☐ Modification(s) of existing water source

☐ Fencing ☐ Overflow ☐ Trough modification ☐ Pipeline

Distance between water sources (waterers): _____

Type of wildlife watering facility:

☐ PVC pipe facility	# _____	☐ Drum with faucet or float	# _____
☐ Small game guzzler	# _____	☐ Windmill supply pipe dripper	# _____
☐ Plastic container	# _____	☐ In-ground bowl trough	# _____
☐ Big game guzzler	# _____	☐ Inverted umbrella guzzler	# _____
☐ Flying saucer guzzler	# _____	☐ Ranch Specialties guzzler	# _____

☐ Other: _____

☐ *Spring development and/or enhancement*

☐ Fencing ☐ Water diversion/pipeline ☐ Brush removal ☐ Spring clean out

☐ Other: _____

5. PROVIDING SUPPLEMENTAL FOOD

☐ Grazing management ☐ Prescribed burning ☐ Range enhancement

☐ Food plots Size: _____ Fenced: ☐ Yes ☐ No

Irrigated: ☐ Yes ☐ No

Plantings: ☐ Cool season annual crops: _____

☐ Warm season annual crops: _____

☐ Annual mix of native plants: _____

☐ perennial mix of native plants: _____

☐ *Feeders and mineral supplementation*

Purpose: ☐ Supplementation ☐ Harvesting of wildlife

Targeted wildlife species: _____

Feed type: _____ Mineral type: _____

Feeder type: _____ Number of feeders: _____

Method of mineral dispensing: _____

Number of mineral locations: _____

Year round: ☐ Yes ☐ No If not, state when:

☐ *Transition management of tame grass monocultures*

☐ Overseed 25% of tame grass pastures with locally adapted legumes

Species planted: ☐ Clover ☐ Peas ☐ Vetch ☐ Other: _____

6. PROVIDING SUPPLEMENTAL SHELTER

☐ *Nest boxes* Target Species: _____

☐ Cavity type. # _____ ☐ Bat boxes. # _____ ☐ Raptor pole. # _____

☐ *Brush piles and slash retention*

☐ Type: ☐ Slash ☐ Brush piles Number per acre: _____

☐ *Fence line management* Length: _____ Initial establishment: ☐Yes ☐ No

Plant type established: ☐ Trees ☐ Shrubs ☐ Forbs ☐ Grasses

☐ *Hay meadow, pasture and cropland management for wildlife* Acres treated: _____

Shelter establishment: ☐ Roadside management ☐ Terrace/wind breaks ☐ Field borders

☐ shelterbelts ☐Conservation Reserve Program lands management

Type of vegetation: ☐ Annual ☐ Perennial

Species and percent of mixture _____

☐ Deferred mowing Period of deferment: _____

☐ Mowing Acres mowed annually: _____

☐ No till/minimum till

☐ *Half-cutting trees or shrubs*

Acreage to be treated annually: _____ Number of half-cuts annually: _____

☐ *Woody plant/shrub establishment*

Pattern: ☐ Block ☐ Mosaic ☐ Strips: Width: _____

Acreage or length established annually: _____ Spacing: _____

Shrub/tree species used: _____

☐ *Natural cavity/snag development*

Species of snag _____ Size of snags: _____ Number/acre _____

7. CENSUS

☐ *Spotlight counts* Targeted species: _____

Length of route: _____ Visibility of route _____

Dates (3 required) A. _____ B. _____ C. _____

☐ *Standardized incidental observations* Targeted species: _____

Observations from: ☐ Feeders ☐ Food plots ☐ Blinds ☐ Vehicle ☐ Other _____

Dates: _____

☐ *Stand counts of deer* (5 one hour counts per stand required). Number of stands: _____

Dates: _____

☐ *Aerial Counts* Species counted: _____

Type of survey: ☐ Helicopter ☐ Fixed-wing

Percent of area surveyed: ☐ Total ☐ 50% ☐ Other: _____

☐ *Track counts:* ☐ Predators ☐ Furbearers ☐ Deer ☐ Other: _____

☐ *Daylight deer herd/wildlife composition counts*

Species: ☐ Deer ☐ Turkey ☐ Dove ☐ Quail ☐ Other _____

☐ *Harvest data collection/record keeping*: ☐ Deer ☐ Game birds

☐ Age ☐ Weight ☐ Sex ☐ Antler data ☐ Harvest date

☐ *Browse utilization surveys* (thirty 12 foot circular plots required)

☐ *Census of endangered, threatened, or protected wildlife.* Species: _____

Method and dates: _____

☐ *Census and monitoring of nongame wildlife species.* Species: _____

Method and dates: _____

☐ *Miscellaneous Counts:* Species being counted: _____

☐ Remote detection (i.e. cameras) ☐ Hahn (walking) line ☐ Roost counts

☐ Booming ground counts ☐ Time/area counts ☐ Songbird transects and counts

☐ Quail call and covey counts ☐ Point counts ☐ Small mammal traps

☐ Drift fences and pitfall traps ☐ Bat departures ☐ Dove call counts

☐ Chachalaca counts ☐ Turkey hen/poult counts ☐ Waterfowl/water bird counts

☐ Alligator nest/census counts ☐ Other: _____

Part V. Attach copies of supporting documentation such as receipts, maps, photos, etc. Use additional pages if necessary.

I certify that the above information provided by me is to the best of my knowledge and belief true and complete.

_____ _____

Signature Date

Texas Parks and Wildlife does not maintain the information collected through this form. This completed form is only provided to the County Tax Appraiser. Please inquire with your County Central Appraisal District on any local laws concerning any information collected through this form.

Appendix V

References

Literature:

Refer to the following Texas Parks and Wildlife Department (TPWD), Natural Resources Conservation Service (NRCS) and Texas Agricultural Extension Service (TCE) bulletins and pamphlets for additional habitat management and specific species management information:

Habitat:

Prescribed Range Burning in Texas by L.D. White and C. W. Hanselka, TCE, Reprinted by TPWD, # PWD-BK-7100-196-7/91

Wetlands Assistance Guide for Landowners by J. K. Anderson, TPWD, #PWD BK R2000-020 (7/95)

The Use and Management of Browse in the Edwards Plateau of Texas, NRCS, November 1994

Basics of Brush Management for White-tailed Deer Production, by T. Hailey, TPWD, PWD-BK-7100-35-12/88

Managing Habitat for White-tailed Deer in the Hill Country Area of Texas, by W. E. Armstrong, TPWD, PWD-RP-7100-193-4/91

Deer:

Learn About Whitetails by R. L. Cook, # PWD-BK-N7100-7-2/93

Determining the Age Of a Deer by C. W. Ramsey, D. W. Steinbach, D. W. Rideout , TCE #B-1453

The Management of Spike Bucks in a White-tailed Deer Population by B. Armstrong, D. Harmel, B. Young, and F. Harwell, TPWD, #PWD LF N7100-247 (8/94)

Supplemental Feeding by J. R. Perkins, TPWD, #PWD-BK-N7100-033-11/91

Vegetation of the Kerr Wildlife Management Area and Its Preference by White-tailed Deer by W. E. Armstrong, D. E. Harmel, M. J. Anderegg, and M. S. Traweek, TPWD, PWD-BK-7100-002A-10/91

Harvest: An Essential Strategy For White-tailed Deer Management by F. Harwell, TPWD, PWD BR N7100-244 (4/94)

Deer Management In The Edwards Plateau of Texas by D. Harmel and G. Litton, TPWD, PWD Booklet 7000-86, March 1983

Squirrel

Fox Squirrel Management in East Texas by B. G. Alexander, TPWD #PWD BK W7100-028 (10/94)

Quail:

Bobwhite Quail in Texas-Habitat Needs and Management Suggestions by A.S. Jackson, Clyde Holt, and Daniel Lay, TPWD, # PWD Brochure 7000-37 5/84

Bobwhite Facts & Fantasies by Horace Gore and Don Wilson, TPWD, #PWD LF (leaflet) C2000-063 (11/87).

The 182 page book "Beef, Brush and Bobwhites - Quail Management in Cattle Country" by Fred S. Guthery. Published by the Caesar Kleberg Wildlife Research Institute, Texas A&I University (now Texas A&M at Kingsville), Kingsville, Texas in 1986.

Dove:

Mourning Doves in Texas, Life History, Habitat Needs, and Management Suggestions by R. R. George, TPWD, #PWD-BK-7100-009A-3/88

Turkey:

Rio Grande Turkey Habitat Management by G. W. Litton and F. Harwell, TPWD, # PWD RP W7100-263 (10/95)

Feral Hog:

The Feral Hog in Texas by R. Taylor, TPWD, #PWD-BK-7100-195-10/91

Purple Martin:

The Purple Martin and Its Management in Texas by J. D. Ray, TPWD, # PWD BK W7100-254 (04/95)

Endangered Species

Endangered and Threatened Animals of Texas - Their Life History and Management by Linda Campbell,

Other Nongame:

Cantle P.C.1978. Avian population densities and species diversity on reclaimed strip-mined land in east-central Texas. M.S. Thesis, Texas A&M University. College Station. 131 pp.

Faanes, C.A. 1987. Bird behavior and mortality in relation to power lines in prairie habitats. U.S. Fish and Wildl. Serv. Tech. Rep. 7. 31pp.).

Mitchnick, A.D. 1979. Avian populations of urban woodlands: comparisons, habitat requirements, and management implications. M.S. Thesis, Texas A&M Univ., College Station. 120pp.;

Mitchnick, A.D., and R.D. Slack. 1979. Comparison and management of avian populations of urban woodlands. Am. Ornithol. Union 97:51

Owens, L.K. 1989. Avian use of fencerow habitat in a predominantly agricultural area. Ph.D. Thesis, Texas A&M Univ., College Station. 157pp

Senzota, R.B. M. 1985. Effects of prescribed burning on a small mammal community in Post Oak Savannah, Texas. Ph.D. Thesis, Texas A&M Univ., College Station. 105pp.

Texas Wildscapes Program. Texas Parks and Wildlife Department, 4200 Smith School Road, Austin, Texas, 78744.

Appendix W
SHARED WILDLIFE RESOURCES

An Ecological Approach to Cooperative Wildlife and Habitat Management in the Cross Timbers

by
Jim Dillard, Technical Guidance Biologist (Retired)
Texas Parks & Wildlife Department, Mineral Wells

History The Cross Timbers Region of north Texas has long been recognized for its bonanza of wildlife resources and unique habitat for a wide variety of native and migratory wildlife species. Collectively referred to as the Cross Timbers and Prairies Ecological Region, it encompasses approximately 17.9 million acres in north and central Texas. It can be subdivided into five sub-regions or land resource areas based on soils, vegetation, rainfall, and geological features reflected on the landscape. Geographically, it occupies the general area from Sherman in Grayson County on the northeast, southward to the top of the Texas Hill Country west of IH 35, west to near Ballinger in Runnels County and north to Wichita Falls.

Kennedy of the British diplomatic corps noted in 1841 that "….The lines of civilization are rapidly extending towards it (the Cross Timbers), and soon the security of science will be forever checked by the destroying axe of the pioneer". In May of 1854, J. Pope's report on the exploration of the region for a route for the Pacific Railroad stated "….but by far the richest and most beautiful district of country I have ever seen, in Texas or elsewhere, is that watered by the Trinity and its tributaries. Occupying east and west a belt of one hundred miles in width, with about equal quantities of prairie and timber, intersected by numerous clear, fresh streams and countless springs, with a gently undulating surface of prairie and oak openings, it presents the most charming views, as of a country in the highest state of cultivation, and you are startled at the summit of each swell of the prairie with a prospect of groves, parks and forests, with intervening plains of luxuriant grass, over which the eye in vain wanders in search of the white village or the stately house, which seem alone wanting to be seen".

Early settlers were drawn to the region following these glowing reports of abundant prairie grasses and forage for livestock, wood for building and fuel, fresh water streams, and a cornucopia of wildlife. Stockmen pored into the region in the 1860's and 1870's despite the firm grip held on the land by native Americans. Men like legendary Charles Goodnight and Oliver Loving moved into the region and helped usher in the new era of westward expansion and livestock ranching. But not until the late 1870's did the Indians relinquish their hold on the region and it become open for permanent settlement. Vast free-ranging herds of cattle grazed on rangelands without permanent property ownership boundaries. Large land holdings purchased for a few dollars per acre were common as demanding cattle markets at the northern railheads proved lucrative to those who learned to judiciously husband the Cross Timbers and Prairies country. Fencing

did not become prominent until the late 1880s. By 1884, the last of the cattle herds had passed through Fort Worth and by 1885 few areas of “free grass” for grazing remained.

Settlement of this region was for the most part environmentally determined. The influence of natural processes of the land and environment held control over the early pioneers in their efforts to survive and sustain an economic foothold in these new lands. Drought, fire, wind, wild animals, insects, disease, floods, cold winters, and Indians often preempted ventures to grow crops, graze livestock, or reap the bounty of this land. There were few roads, water sources were unreliable, and rainfall was unpredictable. The procurement of staples required long and often hazardous trips to frontier settlements. Wildlife, however, provided a source of sustenance from the land to feed many of the early settlers. Buffalo, white-tailed deer, antelope, turkeys, quail, black bear, prairie chickens, waterfowl, and other birds and mammals were common table fare. Wild cattle, horses, and hogs were present in many areas. The supply must have seemed inexhaustible.

Current Trends The evolution of this settling process has resulted in vast changes in the Cross Timbers and Prairies Region over the past 150 years and today we see a much different region manifested by changes in land use, demographics, and infrastructure. The impact of ecosystem fragmentation on wildlife and wildlife habitat has become a significant factor in many parts of the Cross Timbers and Prairies. The conversion of large areas of deciduous oak woodlands to improved pastures and open grazing lands and urban development is occurring at an alarming rate. Land ownership size continues to diminish as larger ranches and land holdings are divided, sold, and developed for different uses. Human population growth and occupation of rural areas continues to grow. Commercial construction, water development on streams, rural subdivisions, and vegetation control projects near urban areas often contribute to the displacement or elimination of many of our wildlife and habitat resources. That trend will likely continue into the 21st century.

Land use in the Cross Timbers and Prairies Region, not unlike most other parts of Texas, is now economically determined for the most part. Many landowners no longer derive their entire livelihood directly from the land. Diversity and multiple land uses for income, a job in town, or a few good pumping oil or gas wells has helped many landowners overcome the environmentally determinant factors of drought, predators, floods, crop failures or fire faced by early settlers. Land continues to change ownership in the Cross Timbers and as it does, often so do land uses. Many new landowners may not have strong ties to the land or understand the natural ecosystem processes that continue to influence wildlife and wildlife habitat resources they now control. Others purchase land primarily for recreation with little knowledge of ecosystems or habitat requirements for wildlife. The presence of good wildlife habitat and sustaining populations of game animals and other wildlife species is often of high priority to new land purchasers in the Cross Timbers. It is in this broad context that the concept of shared wildlife resources and habitat management is emphasized to landowners,

land managers, and all others whose land use and management decisions affect these resources.

Wildlife and Habitat Management Problems With the exception of wildlife found on large land holdings or confined by high fences, most wildlife species found in the Cross Timbers and Prairies Region of Texas live and die on land owned by more than one owner. Land ownership boundaries are not concomitant with home ranges of many wildlife species. The location and distribution of habitat components found on the landscape dictate where populations and individual animals may be at any given time during the year. Food and its seasonal availability and distribution, water, mating, cover, and extremes in weather will influence movements throughout the year.

As land continues to change hands, so too do neighboring landowner relations. Absentee landowners are common in the Cross Timbers; people who purchase rural land, live in the city, and come out to their "ranch" on weekends. Others are "recreational cattlemen" whose bottom line may not be a profit from their livestock operation. Land use may change from providing productive grazing lands for livestock to total non-use of the land for anything except hunting, fishing, or noncomsumptive uses. Absentee landowners often are unacquainted with their adjoining neighbors and view their land use and management activities as an enterprise unto itself without regard to the common shared wildlife resources.

It is this continual changing of land ownerships, reduction of land holding size, and the affect of changing land use and management that will likely determine the ability and capacity of the Cross Timbers and Prairies Region to sustain wildlife populations into the 21st century and beyond. One thing that remains constant in this evolutionary process is the habitat requirements for our native wildlife for survival and reproduction. Wildlife species have evolved and adapted to environments that dictate their life cycles and circadian rhythms for life. Habitat requirements vary greatly among species. All require food, water, cover and space but not in the same amount or type. Many species are territorial and have genetically predetermined spatial requirements for nesting or raising their young, seasonal food requirements, or cover and water availability needs. The ecosystem for waterfowl, for example, may encompass an area from the Arctic circle to Central America whereas that of songbirds may be only a few acres. Habitats that become fragmented or experience degradation may no longer support a species. Individuals of that species may be forced to find alternative and perhaps less productive habitats or be entirely displaced to other areas. Although some species can adapt to modifications of their environment, most do not. Consequently, many landowners' expectations for their land to produce and sustain populations of different wildlife species is often met with disappointment. Attempts to select and target only individual species and their habitat for management are often detrimental to the well being of other species and their habitat. In the natural setting, most actions taken on the land to manipulate vegetation on the landscape will result in many reactions. Wildlife species are

often a barometer by which a measure can be made to determine if those actions were the most appropriate for achieving the desired long term results.

Game animals with large home ranges such as white-tailed deer and Rio Grande turkeys are additionally impacted by hunting. Differing philosophies regarding management and harvest of these species however may be diametrically opposed by adjoining landowners. A flock of turkeys may roost on one landowner's creek bottom, feed on a neighbor's hillsides, and loaf during the day in a brushy pasture of another adjoining landowner before returning to its roost. During the spring, gobblers may seek out hens and establish territories for breeding on an adjoining ranch. Turkey hens may also nest several miles from their winter roost site, improving the odds that they will cross multiple land ownerships in the process. In addition to the square mile that makes up the home range of most white-tailed deer, bucks will range far outside their home range during the rutting season and may be exposed to heavy hunting pressure on acreage owned by several landowners. Young bucks may also be forced out of their normal home range by older bucks during breeding season. Does often travel to open grassy areas to have their fawns which may be on someone else's land. A landowner implementing good range management and proper white-tailed deer habitat, population, and harvest management strategies to produce quality animals may adjoin a neighbor whose land use objective is to maximize livestock production and maximize hunting revenue. Coveys of bobwhite quail may shift their feeding areas during the winter months as they seek better sources of food and cover which may be just across the fence on another property. Doves are attracted to large grain or sunflower fields during the late summer and early fall for feeding and will fly great distances daily to feed or obtain water which may be located several miles from their roost sites.

Nongame species, songbirds, small mammals, reptiles, amphibians, and insects are important to the overall ecosystem of the Cross Timbers and are integral components of the wildlife community. They too are affected by changes and intensity of land use. Although little research has been conducted in the Cross Timbers and Prairies Region on these species, their role in the food chain and diversity of life they represent should not be discounted.

Livestock grazing enterprises also continue to influence vegetation in the Cross Timbers and Prairies Ecological Region by their affect on plant succession, species diversity and the configuration of plant communities on the landscape. Grazing is one of the most important land management tools available to landowners to help manage rangelands and wildlife habitat. Rangelands properly grazed and rested under rotation grazing systems offer a positive influence on wildlife and wildlife habitat. The extremes of grazing intensity, ranging from overstocked or continuously grazed rangelands to those totally void of grazing by livestock, can have detrimental effects on wildlife populations. Continuous overgrazing diminishes seasonal plant diversity and promotes invasion by undesirable annual grasses, weeds or noxious woody species. In the absence of grazing, rangelands may become populated by native grasses

that dominate range sites and reduce space for desirable plants used by wildlife for food and cover. Judicious use of livestock, particularly cattle, can be a compatible vegetation management tool for wildlife habitat management.

Cooperative Land and Wildlife Management Aldo Leopold, known as the father of wildlife management, espoused in his book "A Sand County Almanac" a land ethic philosophy by stating … "All ethics so far evolved rest upon a single premise: that the individual is a member of a community of interdependent parts. His instincts prompt him to compete for his place in that community, but his ethics prompt him also to cooperate. The land ethic simply enlarges the boundaries of the community to include soils, waters, plants, and animals, or collectively, the land." Viewing the land as a community or ecosystem of interrelated parts is fundamental to its management. Unless an understanding of the inter-workings of those parts is perceived in the mind of landowners or land managers, wildlife resources will inevitably be negatively impacted. There continues to be a need to comprehend and promote this "land ethic" philosophy today as more and more wildlife and wildlife habitat becomes shares resources. There must be willful and open communication between individual landowners committed to long term goals and objectives that address the needs of their shared wildlife and wildlife habitat resources.

Cooperative ventures can be initiated between adjoining landowners to collectively promote land management through a commitment to consider the needs of wildlife and wildlife habitat and the overall ecosystems they occupy. Strategies can include implementation of predetermined guidelines that address broad land management practices such as brush control and management, use of fire and herbicides to improve range conditions, water development and use, harvest recommendations for game animals, wildlife census efforts, livestock grazing systems, and other proven land and wildlife management techniques. This cooperative approach must be preceded by a willingness on the part of consenting landowners to 1) participate in a cooperative program, 2) acknowledge and learn about the biological requirements of all wildlife species in the ecosystem, 3) adhere to sound wildlife and wildlife habitat management practices, 4) make concessions on the land that accommodate and promote wildlife populations, 5) understand the limitations of land for sustaining populations of different wildlife species, 6) maintain wildlife populations at or below the carrying capacity of the habitat, and 7) be committed to the long term application of proper land and wildlife management practices.

Conclusion The need for cooperative management of shared wildlife and habitat resources in the Cross Timbers and Prairies Region of Texas has become apparent as the new century approaches. Lessons learned from changes in land uses over the past 150 years tell us that this land is productive, environmentally diverse, and ecologically fragile. The changing demographics of Texas will place added demands on it as our population expands. Wildlife habitat will continue to be altered to accommodate urban sprawl and development and alternative land uses. Fragmentation of land into smaller and less diverse land holdings will have

long term affects on native wildlife species and their habitat. The future availability of habitat for wildlife will in large part be determined by the commitment of individual landowners and the degree of cooperation they foster with their neighbors to provide for and sustain these resources. There are tremendous opportunities at hand for landowners who have a vision for ecosystem management and who will become involved in the management of our shared wildlife resources of the Cross Timbers and Prairies Region of Texas.

Many state and federal agencies offer assistance programs to help landowners manage their wildlife and habitat resources. Texas Parks and Wildlife Department's Private Lands and Habitat Program has a staff of regional technical guidance wildlife biologists and other district wildlife biologists who are available upon written request to help landowners develop management plans to address their long term goals and objectives for habitat enhancement and wildlife management. For more information, contact Texas Parks and Wildlife Department, 4200 Smith School Rd. Austin, TX 78744.

Appendix X

Wildscapes Native Plant List and Bibliography

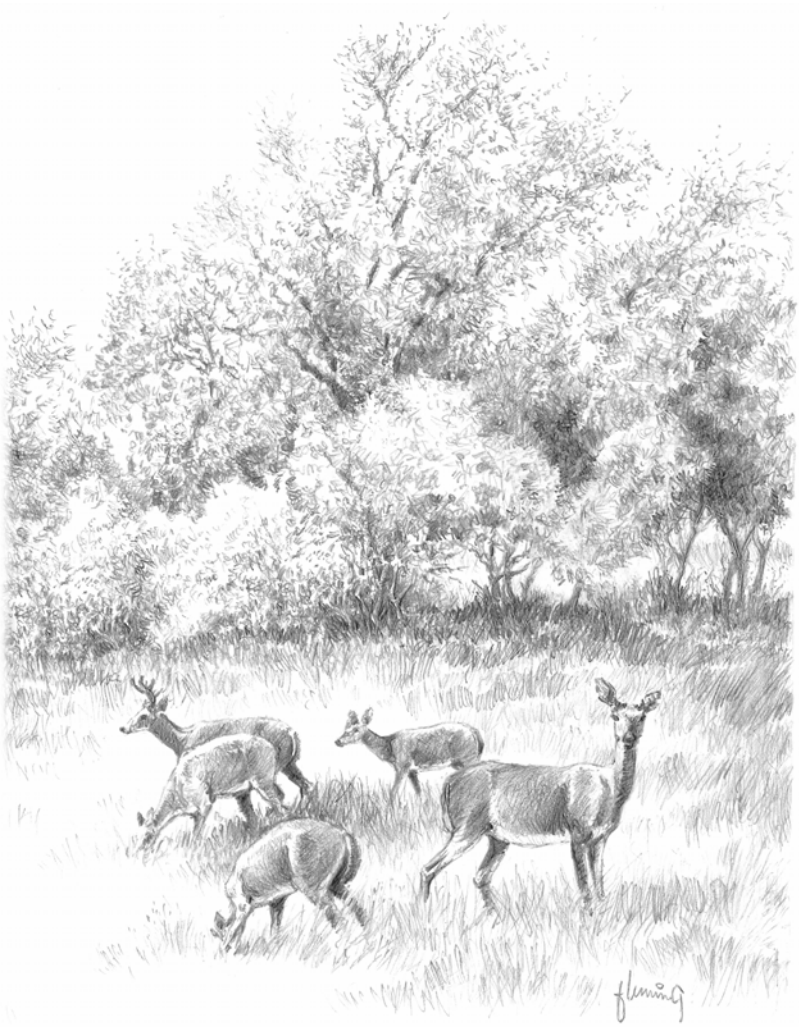

The Edwards Plateau

Semi-arid, rocky, and beautifully rugged, the Edwards Plateau comprises nearly 24 million acres of land dominated by Ashe juniper, various oaks, and occasionally, honey mesquite (Winkler, 1982). Much of the region overlays a foundation of honey-combed Cretaceous limestone--and an immense underground reservoir called the Edwards Aquifer that spills out into many crystal clear springs. Caliche slopes, limestone escarpments, and thin clay soils are riddled with fossil remains of microscopic marine creatures, bearing testimony to the once massive sea that covered most of the state. Topography is generally rough with elevations ranging from slightly less than 1000 feet to over 3,000 feet and average annual rainfall varying from a meager 15 inches in the west to more than 33 inches in the east (Gould, 1975). Droughts can be prolonged, frequent, and often unpredictable. Sporadic flash floods can be devastating to those unaccustomed to their fury. Average temperatures range from 64 F to 67 F. Soils range from neutral to slightly acidic sands and sandy loams in the Llano Uplift, to thin, rocky, highly calcareous clays and clay loams over the rest of the Plateau (Simpson, 1988). Floristically, it is a region of great diversity, with 100 of the 400 Texas endemic plants occurring only here, including Texas snowbells, Bracted twist-flower, Texabama croton, Texas wildrice, and rock quillworts. Tucked away in protected valleys, are relict populations of Texas madrone, Texas smoke tree, witch hazel, and big-tooth maples -- trees normally found far to the northeast in Arkansas, to the west in the Trans-Pecos mountains or to the south in the mountains of Mexico (Wasowski, 1988). The moist river corridors of the Colorado, Guadalupe, Blanco, and Nueces are lined with majestic baldcypress, pecan, hackberry and sycamores. And perhaps nowhere else are the spring wildflowers so spectacular as here, with undulating tapestries of bluebonnets, Indian paintbrush, gaillardia and golden-wave dazzling even the most jaded eye come April.

The region also hosts a number of terrestrial vertebrates. Here the white-tailed deer is king. Other common denizens of the Hill Country include armadillo, black-tailed jackrabbit, opossum and Texas earless lizard. The purity and constant temperature of the waters provide ideal habitat for specialized spring dwellers such as the Clear Creek Gambusia, the San Marcos Gambusia, the Fountain Darter and the San Marcos Salamander. Within the larger rivers can be found the unique Guadalupe Bass and the Cagle's Map Turtle. Thousands of caves of all sizes harbor cave shrimp and blind salamanders which live only within the confines of these underground systems. Rare invertebrates like blind spiders, pseudoscorpions, mold beetles and harvestmen are also found in caves, as well as Mexican free-tailed bats which establish summer nursery colonies within several larger caves throughout the region. The Edwards Plateau also provides a meeting ground for birds typical of both eastern and western regions. The Green Kingfisher, Cave Swallow, Black-capped Vireo and Golden-cheeked Warbler nest more commonly here than in any other region in the state (Fisher, 1984).

TEXAS WILDSCAPES NATIVE PLANT TABLES
BIBLIOGRAPHY - EDWARDS PLATEAU

The following references were used to compile the above tables and regional description of the Edwards Plateau:

Ajilvsgi, G. 1984. Wildflowers of Texas. Bryan, Texas: Shearer Publishing Inc.

Ajilvsgi, G. 1991. Butterfly Gardening for the South. Dallas, Texas: Taylor Publishing Company.

Amos, C. and F. Gehlbach., eds. 1988. Edwards Plateau Vegetation: Plant Ecological studies in Central Texas. Waco, Texas: Baylor University Press.

Correll, D. and M. Johnston. 1979. Manual of the Vascular Plants of Texas. Richardson, Texas: University of Texas.

Cox, P. and P. Leslie. 1988. Texas Trees; A Friendly Guide. San Antonio, Texas: Corona Press.

Enquist, M. 1987. Wildflowers of the Texas Hill Country. Austin, Texas: Lone Star Botanical.

Gould, F. 1975. The Grasses of Texas. College Station, Texas: Texas A&M University Press.

Gould, F., G.O. Hoffman, and C.A. Rechenthin. 1960. Vegetational Areas of Texas. College Station, Texas: Texas Agricultural Experiment Station L-492.

Lynch, Brother D. 1981. Native and Naturalized Woody Plants of Austin and The Hill Country. Austin, Texas: Saint Edward's University.

Martin, A.C., H.S. Zim, and A.L. Nelson. 1951. American Wildlife and Plants - A Guide to Wildlife Food Habits. New York: Dover Publications.

Peterson, R.T. et al. 1974. Gardening with Wildlife. Washington, D.C.: National Wildlife Federation.

Pope, T., N. Oldenwald, and C. Fryling. 1993. Attracting Birds to Southern Gardens. Dallas: Taylor Publishing Company.

Simpson, B.J. 1989. A Field Guide to Texas Trees. Austin, Texas: Texas Monthly Press.

Texas General Land Office. 1980. "The Natural Heritage of Texas." Austin, Texas: Nature Conservancy.

Tufts, C. 1988. The Backyard Naturalist. Washington, D.C.: National Wildlife Federation.

Vines, R.A. 1960. Trees, Shrubs, and Woody Vines of the Southwest. Austin, Texas: University of Texas Press.

Wasowski, S. and A. Wasowski. 1989. Native Texas Plants: Landscaping Region by Region. Austin, Texas: Texas Monthly Press.

Wilson, J. 1991. Landscaping with Wildflowers. Boston: Houghton Mifflin Company.

Winckler, S. 1982. Texas Diversity: From the Piney Woods to the Trans-Pecos. In: The Nature Conservancy News: 32(5)

The Cross Timbers and Prairies

The Cross Timbers and Prairies contain about 17,000,000 acres represented by alternating bands of wooded habitat scattered throughout a mostly prairie region -- thus the term Cross Timbers. Elevations range from about 600 to almost 1,700 feet while rainfall varies from about 25 inches in the west and 35 inches in the east. Average annual temperatures are about 67 F. The Cross Timbers share many of the same species with the Post Oak Savannah. Grassland species such as little bluestem, Indiangrass and big bluestem are common to both, but there are a few notable differences in floral composition. Yaupon, sassafras and dogwood which form dense understory thickets in the Post Oak Savannah are almost nonexistent in the Eastern Cross Timbers. Texas mulberry, American elm and Osage orange become more common. In the understory are rusty blackhaw viburnum, American beautyberry, Arkansas yucca, and smooth sumac. In the Western Cross Timbers, which is drier still, live oak becomes more important, replacing the post oaks as you proceed westward. The decrease in moisture discourages trees from growing close together except along streams resulting in more expansive pockets of prairies separating isolated stands of trees. Here flameleaf sumac, redbud, Mexican plum, rusty blackhaw viburnum and Eastern red cedar become more prevalent. Fragrant sumac appears for the first time, a common shrub in the Western Cross Timbers and further west. Wildlife consists of a mixture of eastern forest and prairie species.

TEXAS WILDSCAPES NATIVE PLANT TABLES
BIBLIOGRAPHY - CROSS TIMBERS & PRAIRIES

The following references were used to compile the above tables and regional description of the Cross Timbers and Prairies:

Ajilvsgi, G. 1984. Wildflowers of Texas. Bryan, Texas: Shearer Publishing Inc.

Ajilvsgi, G. 1991. Butterfly Gardening for the South. Dallas, Texas: Taylor Publishing Company.

Correll, D. and M. Johnston. 1979. Manual of the Vascular Plants of Texas. Richardson, Texas: University of Texas.

Cox, P. and P. Leslie. 1988. Texas Trees; A Friendly Guide. San Antonio, Texas: Corona Press.

Enquist, M. 1987. Wildflowers of the Texas Hill Country. Austin, Texas: Lone Star Botanical.

Gould, F. 1975. The Grasses of Texas. College Station, Texas: Texas A&M University Press.

Gould, F., G.O. Hoffman, and C.A. Rechenthin. 1960. Vegetational Areas of Texas. College Station, Texas: Texas Agricultural Experiment Station L-492.

Lynch, Brother D. 1981. Native and Naturalized Woody Plants of Austin and The Hill Country. Austin, Texas: Saint Edward's University.

Mahler, W.F. 1988. Shinner's Manual of the North Central Texas Flora. Fort Worth, Texas: Botanical Research Institute of Texas.

Martin, A.C., H.S. Zim, and A.L. Nelson. 1951. American Wildlife and Plants - A Guide to Wildlife Food Habits. New York: Dover Publications.

Pope, T., N. Oldenwald, and C. Fryling. 1993. Attracting Birds to Southern Gardens. Dallas: Taylor Publishing Company.

Simpson, B.J. 1989. A Field Guide to Texas Trees. Austin, Texas: Texas Monthly Press.

Texas General Land Office. 1980. "The Natural Heritage of Texas." Austin, Texas: Nature Conservancy.

Tufts, C. 1988. The Backyard Naturalist. Washington, D.C.: National Wildlife Federation.

Vines, R.A. 1960. Trees, Shrubs, and Woody Vines of the Southwest. Austin, Texas: University of Texas Press.

Wasowski, S. and A. Wasowski. 1989. Native Texas Plants: Landscaping Region by Region. Austin, Texas: Texas Monthly Press.

Weaver, J.E. 1954. North American Prairie. Lincoln, Nebraska: Johnsen Publishing Company.

Wilson, J. 1991. Landscaping with Wildflowers. Boston: Houghton Mifflin Company.

Winckler, S. 1982. Texas Diversity: From the Piney Woods to the Trans-Pecos. In: The Nature Conservancy News: 32(5)

Wildscapes Plant List -- Edwards Plateau

SPECIES	FAMILY	HABIT/ HEIGHT	FLOWER	FRUIT	SUN EXPOSURE	HABITAT	SOILS & MOISTURE REGIME	VEGETATION ZONES										ORNAMENTAL VALUE	WILDLIFE VALUE
								1	2	3	4	5	6	7	8	9	10		
Carya illinoinensis Pecan	Juglandaceae Walnut Family	Tree, large 50' - 60'	inconspicuous catkins, m & f, yellowish on same tree. March - May	Nut Sept.- Oct.	Full sun, Part shade	Prefers rich bottomlands.	Sands, loams, or clays. Well-drained, mesic.	X	X	X	X	X	X	X	X			Beautiful shade tree with elegant compound leaves. Prefers deep, rich soils but will grow in thinner soils. Sometimes turns yellow in fall. Deciduous.	Sweet edible nuts valuable for all kinds of wildlife, birds & mammals alike including gamebirds, woodpeckers, jays, sparrows, fox squirrels, gray fox, opossums, and raccoons. Good substrate for insectivorous birds. Larval host plant for Gray hairstreak.
Celtis laevigata Sugarberry	Ulmaceae - Elm Family	Tree, large 40' - 60'	inconspicu-ous small, greenish. May - June	Berry (drupe), orange-red to purplish-black. July - Aug.	Full sun, part shade	Rocky or alluvial soils along streams, in woodlands & thickets.	Sands, loams, and clays. Prefers rich soils, but will tolerate wide range. Well-drained, mesic to xeric; drought tolerant once established.	X	X	X	X	X	X	X	X	X	X	Fast-growing shade tree adapted to most soils. Very drought tolerant. Yellow autumn color. Deciduous.	Fruit eaten by bluebirds, robins, cardinals, mockingbirds, cedar waxwings, thrashers, & sparrows. Good nest & cover tree, esp. for neotropical migrants. Larval food plant for Question Mark, Mourning Cloak, Pale Emperor, Snout & Hackberry butterflies.
Juglans nigra Black walnut	Ulmaceae - Elm Family	Tree, large 40' - 80'	inconspicu-ous catkins, m & f, yellowish-green. April - May	Walnut Sept. - Oct.	Full sun, part sun	Deep, rich soils of woodlands.	Limestone soils, rich in calcium. Well-drained, mesic		X	X	X	X		X	X			Shade tree with graceful appearance and fast growth rate. Immune to pests. Deciduous.	Nuts are preferred food of squirrels which disperse seeds. Woodpeckers, jays and gamebirds also like nuts. Good cover and nest tree for birds. Larval host plant of the Banded hairstreak.
Prunus serotina v. eximia Plateau black cherry	Rosaceae - Rose Family	Tree, large 40' - 60'	Showy racemes of creamy white flowers. March - June	Cherries, small & black. July - Oct.	Full sun, part shade	Prefers limestone soils in woodlands, floodplains, draws, canyons & mountain slopes of the Edwards Plateau.	Limestone & caliche type soils. Well-drained, mesic							X				Very ornamental overstory tree with attractive bark, pretty leaves & showy flowers & fruit. Deciduous.	Very important wildlife food source. Flowers attract several species of insects. Ripe cherries eaten by over 30 species of birds. Foliage browsed by deer & rabbits. LHP for Striped hairstreak, Red-spotted purple, Viceroy, Henry's Elfin, Tiger swallowtail
Quercus fusiformis Plateau liveoak	Fagaceae - Beech Family	Tree, large 30' - 50'	inconspicu-ous m & f catkins borne separately on same tree, yellow- green & red. March	Acorns Sept. - Oct.	Full sun, part shade	Prefers calcareous substrate, rocky limestone soils of the Hill Country.	Sands, loams, clays. Prefers limestone & caliche type soils. Will grow on any alkaline to slightly acid soil. Well-drained, xeric-mesic		X	X	X	X	X	X	X			Plateau liveoak is an excellent evergreen shade tree often found growing in mottes. Adapts to a variety of sites, but not extremely wet or dry ones. Evergreen.	Excellent cover & nesting tree. Acorns have high energy value & eaten by almost all forms of wildlife: deer, squirrels, fox, raccoons, gamebirds, woodpeckers, & jays. Fine substrate for insectivorous birds. LHP of 3 hairstreak species and duskywing.

Quercus muehlenbergii Chinkapin oak	Fagaceae - Beech Family	Tree, large 40' - 60'	inconspicu-ous m & f catkins borne separately on same tree, yellowish. Mar.- June	Acorns Sept. - Oct., every 2 years	Full sun, part shade	Prefers upland forested areas.	Loams, clays & limestone soils. Well-drained, mesic.			X	X		X			X	Beautiful, fast-growing shade tree. Attractive leaf shape. Bronze autumn color. Deciduous.	Sweet, edible nuts favored by many species of birds & mammals, deer, raccoons, opossums & squirrels. Good nesting and cover tree. Good substrate for insectivorous birds. Larval host plant to Horace's Duskywing.
Quercus texana Texas red oak	Fagaceae - Beech Family	Tree, large 30' - 50'	inconspicu-ous m & f catkins, reddish, borne on same tree. March - April	Acorns, every second year. Sept. - Oct.	Full sun, part shade	Prefers dry upland sites.	Prefers alkaline, limestone soils, as well as slightly acid gravels & sands. Well-drained, mesic			X		X	X				Very beautiful shade tree, sometimes multi-trunked, with elegantly dissected leaves and striking fall orange to scarlet color. Prefers the cooler, moister soils of north or east exposures. Deciduous.	Catkins are eaten by several species of birds. Good cover & nesting tree. Fine substrate for insectivorous birds. Acorns eaten by many species of wildlife: deer, squirrels, turkey, bobwhite, woodpeckers. LHP for Horace's & Juvenal's duskywings.
Ulmus crassifolia Cedar elm	Ulmaceae - Elm Family	Tree, large 30' - 60'	inconspicu-ous greenish perfect flowers borne in clusters. July.- Sept.	Samara Aug. - Oct.	Full sun, part shade	Prefers woodlands, ravines & open slopes.	Sands, loams & clays Seasonal poor drainage O.K.	X	X	X	X	X	X	X	X		Good shade tree, each with a unique shape. Fast growing & long lived. Excellent yellow fall color. LHP for Mourning Cloak & Question Mark. Deciduous.	Seeds & buds eaten by gamebirds, woodpeckers, chickadees, finches, sparrows & warblers. Good nesting and cover tree with lots of insects for insectivorous birds. Deer browse leaves; squirrels, foxes & rabbits eat seeds & buds.
Diospyros texana Texas persimmon	Ebenaceae - Ebony Family	Tree, small 15' - 40'	Small greenish white flowers, fragrant. March	Fruit, small, round black & fleshy with lots of seeds. June - July	Full, part shade	Prefers limestone hills, shinnery oak dunes, breaks & rocky canyons, mesquite groves, areas along water courses.	Sands, loams & clays Well-drained, xeric		X	X	X	X	X	X			X	Very attractive tree with smooth gnarled grayish bark and small leathery leaves. Quite drought-resistant once established. Deciduous.	Fragrant whitish flowers attract insects of many kinds. Ripe fruits eaten by several species of game & song birds. Mammals, especially javelina, relish the fruit. Leaves browsed by white-tailed deer. Larval host plant for Gray hairstreak & Henry's elfin.
Fraxinus texensis Texas ash	Oleaceae Olive Family	Tree, small 30' - 40'	Small m flowers, f flowers in clusters, purplish. Feb. - March	Samara August - Sept.	Full sun, part shade	Prefers canyons, bluffs, rocky slopes, open woodlands, near lakes in Edwards Plateau & Western Cross Timbers.	Sands, loams & clays. Likes limestone soils Well-drained, xeric-mesic			X	X	X	X				Short-trunked medium-sized tree with contorted branches. Has beautiful reddish-yellow fall color. Long-lived & healthy & very drought tolerant. Flowers & fruit quite decorative. Deciduous.	Good substrate for insectivorous birds. Fine nesting & cover tree. Several species of birds relish both flowers & fruits, esp. finches, cardinals & grosbeaks. Foliage browsed by rabbits, porcupine & white-tailed deer.

Ilex vomitoria Yaupon	Aquifoliaceae Holly Family	Tree, small 15' - 25'	inconspicu-ous m & f creamy white flowers on separate trees. April	Drupes, (berry-like fruits) red on female tree. Sept. - Dec.	Full sun, part shade, dappled shade, shade	Prefers low woods, hammocks & sandy pinelands along streams, East Texas Piney Woods, Gulf Coast, eastern Edwards Plateau and Oak Woods & Prairies.	Sands, loams & clays Well-drained, mesic. Seasonal poor drainage O.K.	X	X	X			X	X				Good understory tree or accent tree with a branchy appearance. Female trees have red berries held over winter, very ornamental. Shiny dark leaves attractive. Adaptable, grows in sun or shade, dry or moist soils of various types. Evergreen.	Fruits are eaten by several species of birds: bobwhite, doves, robins, cedar waxwings, bluebirds, jays & mockingbirds. Squirrels, opossum, rabbits & fox eat berries too. Flower nectar & pollen attract many insects. Good nest tree. LHP of Henry's Elfin.
Morus rubra Red mulberry	Moraceae Fig Family	Tree, small 35' - 40'	inconspicu-ous m & f greenish flowers, on separate trees. March - June	Mulberry (syncarp of aggregated red-black drupelets) April - Aug.	Full sun, part shade, dappled shade	Prefers rich soils along streams, creek bottoms & moist woodlands.	Sands, loams & clays Well-drained, mesic.	X	X	X	X	X	X	X	X		X	Handsome understory tree with polymorphic leaves, reddish black fruit and broad spreading crown. Good growth rate & easily transplanted. Deciduous.	Red mulberries are the prime source of spring fruit for neotropical migrant birds. 21 species devour them as soon as they ripen as do squirrels, raccoons, opossums & skunks. Larval host plant for Mourning Cloak.
Pistacia texana Texas pistache	Anacardiaceae Sumac Family	Tree, small 10' - 40'	Small m & f greenish flowers, in dense clusters April - Sept.	Berries, red turning to blue-black. Sept. - Oct.	Full sun, part shade	Prefers limestone soils on canyon headers, along steep narrow canyons & on shallow, wide bottoms in Edwards Plateau.	Sands, loams & clays. Likes limestone & caliche-type soils Well-drained, mesic-xeric.							X				An airy, rounded small tree, often with multi-trunks. Foliage is glossy & attractive with reddish leaves in the spring. Good for hedges. Fast-growing & drought tolerant. Quite ornamental in appearance. Deciduous to Persistent.	Ripe berries are favorites with several species of birds, including robins, bluebirds, cardinals, mockingbirds, towhees, sparrows & finches. Small mammals also like fruit. Good cover & nesting tree.
Rhamnus caroliniana Carolina buckthorn	Rhamnaceae - Buckthorn Family	Tree, small 12' - 20	inconspicu-ous, small greenish-yellow flowers. May - June	Drupes fleshy, reddish brown turning black, with 3-4 hard seeds. Aug. - Sept.	Full sun, part shade, shade	Prefers moist woods, fence rows, along creeks, heads of draws & canyon slopes.	Sands, loams & clays Well-drained, mesic.	X	X	X	X	X	X	X				Very attractive understory tree with pretty leaves and berries. Quite ornamental and adapted to a wide range of sites. Has good fall color & fruits borne over a long time. Deciduous.	When ripe, fruits are devoured by several species of birds, i.e. thrashers, robins, mockingbirds, cardinals, finches, etc. Flowers are good nectar source for bees, butterflies & other insects. Larval host plant for Gray hairstreak.
Rhus lanceolata Lance-leaf sumac	Anacardiaceae Sumac Family	Tree, small 10' - 20'	m & f flowers, small greenish white, on separate trees. June	Drupes, small red, in clusters, remain after leaves fall. Sept. - Dec.	Full sun, part shade	Occurs on limestone & in calcareous soils, woodlands & roadside edges, along fencerows. Tolerates disturbed soils.	Sands, sandy loams, neutral clays, likes limestone soils. Well-drained, mesic.				X	X		X			X	Sometimes thicket-forming small tree with elegant compound leaves and showy red fruit clusters. Only trees with f flowers have fruit. Leaves turn a beautiful red color in the fall. Fast growing with a very attractive shape. Deciduous.	Fruit is eaten by more than 20 species of birds, favored by quail & turkey. Flowers attract numerous insects in spring, good nectar source for bees & butterflies. Leaves browsed by deer. Larval host plant for Red-banded hairstreak.

Acer grandidentatum Big-toothed maple	Aceraceae - Maple Family	Ornamental tree 20' - 45'	Small & yellow, in few-flowered clusters. April - May	Samara, double-winged, rose-colored. Sept.	Full sun, part shade	Prefers moist, protected canyons of Edwards Plateau & mountains of Trans-Pecos.	Sands, loams & clays. Likes limestone soils. Mesic, likes moist soils.					X		X			X	One of the most beautiful ornamental trees in Texas with its beautifully shaped opposite leaves & exquisite fall color. Grows quickly & does very well under cultivation. Deciduous.	White-tailed deer browse the foliage. Samaras used as food by many species of birds & small mammals. In the spring, many species of birds eat the young flowers. Good nesting & cover tree. Excellent substrate for insectivorous birds.
Aesculus pavia Red buckeye	Hippocastanaceae Horse chestnut Family	Ornamental tree or shrub 10' - 35'	Showy red/yellow tubular flowers in terminal clusters. March	Capsule, round & leathery. Sept.	Part shade, dappled shade, shade	Prefers moist soils in forests, along streams, thickets & rocky hills.	Sands, loams & clays Well-drained, mesic. Moderate moisture.	X	X	X	X			X	X			Showy small tree or shrub with rounded crown, distinctive flower clusters and attractive palmate leaves. Blooms very early; loses leaves early. Good understory tree. Deciduous, early.	The scarlet tubular flowers are visited by hummingbirds. Butterflies are also attracted to the nectar. Seeds are poisonous, however, and not eaten by wildlife.
Arbutus xalapensis Texas madrone	Ericaceae Heath Family	Ornamental tree 20' - 30'	Small white to pinkish urn-shaped flowers. Feb. - April	Berries, bright red. Sept. - Oct.	Part shade	Prefers wooded, rocky canyons & limestone bluffs.	Sands, loams & clays. Likes limestone, caliche-like soils. Well-drained, mesic							X			X	Absolutely gorgeous multi-trunked ornamental tree with papery thin peeling bark. Soft cream-colored spring bark turns reddish in summer. Attractive urn-shaped flowers set off nicely from dark green leathery leaves. Can be hard to grow, but worth it.	Flowers attract several kinds of insects. Berries are sought after by several species of birds & small mammals, also by white-tailed deer.
Cercis canadensis v. texensis Texas redbud	Leguminosae Legume Family	Ornamental tree 10' - 30'	Showy magenta pea-like flowers, appear before leaves. March	Legumes, brownish-red, in clusters. Sept.	Full sun, part shade, dappled shade	Prefers thinner calcareous, rocky soils of Edwards Plateau & North Central Texas.	Sands, loams & clays; likes limestone soils. Well-drained, mesic; but less moisture than Eastern variety.				X	X		X	X			Highly ornamental and showy small tree with spreading, flat or rounded crown. Good understory tree or accent plant. Fast growing, usually with single trunk. Leaves have distinctive kidney shape & are shinier than other subspecies of Redbud. Deciduous.	Beautiful magenta flowers are copious early nectar source for butterflies, moths, bees, etc. Seeds are eaten by a number of species of birds; foliage browsed by white-tailed deer. Larval host plant to Henry's Elfin.
Leucaena retusa Goldenball leadtree	Leguminosae Legume Family	Ornamental tree 12' - 25'	Showy yellow flower balls, very fragrant. April - Oct.	Leguminous pod, linear. Sept. - Nov.	Full sun, part shade	Prefers dry rocky canyons on rocky soils.	Sands, loams & clays; prefers limestone, caliche-type soils. Well-drained, xeric.							X			X	Airy ornamental with bright green twice compound leaves with profusely blooming yellow ball-like blossoms. Flaking bark is cinnamon-colored & very attractive. Tree blooms from spring until fall. Sun-loving flowers are well able to grow underneath.	Excellent cover & nesting tree. Insects of many varieties are attracted to the copious nectar of the fragrant flowers. White-tailed deer browse the leaves.

Prunus mexicana Mexican plum	Rosaceae - Rose Family	Ornamental tree 15' - 35'	Showy, white perfect flowers, fragrant. Feb. - April	Plum, red-purple. Sept. - Oct.	Full sun, part shade	Prefers river or creek bottoms, hardwood slopes & hillsides, & prairies.	Sands, loams & clays Well-drained, mesic	X	X	X	X	X		X				Medium sized, single-trunked ornamental tree with broad crown and satiny silver bark with dark fissures. Excellent accent plant with heavenly fragrance when in bloom. Deciduous.	Early spring clouds of white flowers are wonderful nectar source, attracting bees, butterflies & diurnal moths. Gamebirds, songbirds & several species of mammals feast on the ripe plums. Larval host plant for Tiger swallowtail.
Viburnum rufidulum Rusty black-haw viburnum	Caprifoliaceae Honeysuckle Family	Ornamental tree or large shrub 20' - 30'	Showy creamy-white clusters of flowers. March - May	Berries, bluish-black (drupes) Sept. - Oct.	Full sun, part shade	Prefers moist soils along streamsides, in open woods & thickets.	Sands, loams & clays, esp. limestone soils. Well-drained, mesic.	X	X	X	X	X		X	X		X	Small, single-trunked, ornamental with broad crown. Attractive as understory tree, also beautiful in the open. Leaves very glossy, turning red, mauve or orange in fall. Slow growing, remaining shrub size for a long time. Deciduous.	Flowers are good nectar source for bees, butterflies & other insects. Fruits relished by several kinds of birds & small mammals. Robins, cedar waxwings, cardinals, bluebirds & mockingbirds love fruit, as do squirrels, opossums, raccoons & rabbits.
Juniperus ashei Ashe juniper	Cupressaceae Cypress Family	Conifer 10' - 30'	inconspicu-ous February	Cones, fleshy & berry-like. Aug. - Sept.	Full sun, part shade	Prefers rocky soils in canyons, ravines, arroyos, rimrock & breaks; on eroded slopes & flats.	Sands, loams & clays, likes limestone soils. Well-drained, xeric				X	X	X	X				Multi- or single-trunked thick evergreen tree with wonderfully shaggy bark. Leaves scale-like, dark green & aromatic. Female plant with large blue fruits. Dominant plant of the hill country. Evergreen.	Bark strips used as nest material by the Golden-cheeked warbler. Blue fruits a winter-time favorite of wildlife: bluebirds, robins, cedar waxwings, cardinals, finches & mammals. Good substrate for insectivorous birds. LHP of Olive & Juniper hairstreak.
Pinus remota Remote pinyon pine	Pinaceae - Pine Family	Conifer 20' - 30'	inconspicu-ous February	Cones Sept. - Oct.	Full sun, part shade	Prefers rocky mesas & dry limestone slopes of western Edwards Plateau.	Sands, loams & clays, likes limestone & caliche-like soils. Well-drained, xeric.							X				Very attractive pine with pyramidal shape. Flexible blue-green needles are highly appealing. Makes a great accent plant. Very heat tolerant. Evergreen.	Excellent nesting & cover tree throughout the year. Pinyon nuts are highly prized by both gamebirds like quail & turkey & others able to extract them, i.e., scrub jays, woodpeckers & finches. Ground squirrels, rock squirrels, porcupines also love them.
Taxodium distichum Bald cypress	Taxodiaceae Bald Cypress Family	Conifer 45' - 100'	inconspicu-ous 5'-long clusters of m cones. F cones at branch tips. March - April	Mature cones, wrinkled, rounded, 1-inch in diameter. Sept. - Oct.	Full sun, part shade	Prefers moist soils in swamps, river bottoms, forests along streams.	Sands, loams & clays Hydric - mesic. Seasonal poor drainage O.K.	X	X	X	X		X	X				Large conifer with feathery, deciduous, needle-like leaves. Fast-growing with reliable bronze fall color. Long-lived tree often used as ornamental. Spanish moss (good nesting material) festoons branches. Deciduous.	Excellent cover & nesting tree. Seeds eaten by many different kinds of birds, esp. waterfowl & sandhill cranes. Squirrels, & many other forms of wildlife eat seed cones. Good foraging substrate for insectivorous birds.

Anisacanthus wrightii Flame acanthus	Acanthaceae - Acanthus Family	Shrub 3' - 4'	Showy orange narrowly tubular flowers. June - Nov.	Capsule with seeds. Aug. - Nov.	Full sun, part sun, dappled shade	Prefers rocky banks & floodplains of Edwards Plateau streams.	Sands, loams & clays, likes limestone, caliche-like soils. Mesic, well-drained.							X				Profusely-blooming shrub with bright orange tubular blossoms. Flowers continue to bloom through the fall. Very drought tolerant once established. Deciduous.	Flowers attract myriads of butterflies, moths & other insects throughout the summer. Both Ruby-throated and Black-chinned hummingbirds feed on the nectar also. Larval host plant for the Texas crescentspot and Janais patch butterflies.
Callicarpa americana American beauty-berry	Verbenaceae - Vervain Family	Shrub 3' - 9'	Small clusters of white or pink flowers at nodes. May - July	Berries, magenta, in clusters at nodes. Aug. - Nov.	Part shade, dappled shade.	Prefers moist soils of canyons and bottomlands, woods & thickets.	Sands, loams & clays. Likes rich soils. Well-drained, mesic.	X	X	X	X	X		X				Open, much branched shrub with showy magenta berries. Has mounding form. Likes to be watered during dry periods. Deciduous.	Fruits are favored by several species of birds, i.e., bobwhite, mockingbirds, cardinals, thrashers, robins, finches & towhees. Raccoons, opossum & gray fox also relish berries.
Forestiera pubescens Elbowbush	Oleaceae - Olive Family	Shrub 5' - 10'	Showy yellow bracts appear before leaves, early in spring. Feb.	Berries, bluish-black (drupes). June - Oct.	Full sun, part shade, dappled shade	Prefers open pastures, brushy prairies, woodlands & thickets.	Sands, loams, & clays. Well-drained soils, mesic to semi-dry.				X	X		X				Straggling, irregularly shaped shrub. Though not beautiful, this is the first shrub to bloom in spring. Opposite softly fuzzy leaves and blue-black berries. Deciduous.	Yellow flowers appear early in spring providing early nectar source for bees, butterflies & other insects. Berries are eaten by several species of birds & small mammals. Leaves are browsed by white-tailed deer.
Lantana horrida Lantana	Verbenaceae Vervain Family	Shrub 3' - 6'	Showy yellow & orange heads made up of tiny florets. May to December.	Berries, green then dark blue-black. Sept. - Nov.	Full sun, part shade	Occurs in fields, thickets, swamps, rich sandy woods, scrub & gravelly hills.	Sands, loams & clays Well-drained, xeric to mesic.	X	X	X	X	X	X	X				This showy shrub is planted for its long, profuse blooming season. Though not a native of Texas, it can be planted almost throughout the state. It loves the hot weather. It's good to prune it back to the ground each winter. Deciduous.	Colorful, long-blooming flowers attract both butterflies and hummingbirds throughout the season. Northern cardinals and other species of birds eat the ripe fruit. Fairly deer resistant. Larval host plant of the Painted Lady.
Leucophyllum frutescens Cenizo	Scrophulariaceae Figwort Family	Shrub 4' - 8'	Showy lavender to light purple flowers, almost bell-shaped. May - Oct.	Capsules Sept. - Dec.	Full sun, a little shade O.K.	Prefers rocky limestone hills, bluffs, ravines, arroyos & brushlands.	Sands, loams & clays, likes limestone soils. Well-drained, xeric.						X	X			X	Drought-hardy shrub with pretty gray leaves & long-blooming magenta to lavender flowers. The silvery-gray leaves lend a highly ornamental flair to this shrub. Evergreen.	The showy lavender flowers attract several kinds of insects. This dense shrub offers good cover and a safe nesting site for birds. The leaves are not readily browsed by white-tailed deer. Larval host plant of the Theona Checkerspot.
Lindera benzoin Spicebush	Lauraceae - Laurel Family	Shrub 10' - 15'	Small yellow-green flowers appear before leaves. March - April	Drupes, bright red. Aug. - Oct.	Part shade, dappled shade	Prefers rich wooded slopes & rocky areas along streams of the Edwards Plateau.	Loams, limestone & caliche-type soils. Well-drained, but moist.							X				Attractive, multi-trunked shrub that prefers rich soil or sandy gravel in the shade along streams. Leaves, twigs, bark & fruit contain nice aromatic oil. Red berry-like fruits are very ornamental. Deciduous.	Flowers attract several kinds of insects & are good early source of nectar. White-tailed deer & rabbits browse lightly on leaves. 24 species of birds feed on the red berries. Good cover & nesting site for birds. LHP of Spicebush & Tiger swallowtails.

Rhus aromatica Fragrant sumac	Anacardi-aceae Sumac Family	Shrub 3' - 8'	inconspicu-ous yellow flowers appearing before leaves. Feb. - March	Berries, red May - June	Full sun, part shade, dappled shade.	Prefers limestone outcrops, rocky slopes, prairies, & mesquite plains.	Sands, loams & clays. Likes limestone soils. Well-drained, mesic.	X	X	X	X	X	X	X	X	X	X	Aromatic shrub with pretty leaves & early flowers. Tends to form thickets & is irregularly branched. Deciduous.	Early flowers provide early nectar source for insects like bees, butterflies & moths. The red berries are one of the earliest summer fruits making it popular with several species of birds & small mammals. Larval host plant to Red-banded hairstreak.
Salvia greggii Autumn sage	Lamiaceae - Mint Family	Shrub 2' - 4'	Showy magenta red flowers, also comes in white, pink or coral. April - Dec.	Nutlets June - Dec.	Full sun, part shade	Prefers rocky soils in central, south & west Texas.	Sands, loams & clays. Likes limestone soils, esp. Well-drained, mesic-xeric.				X		X	X			X	Aromatic showy shrub which blooms prolifically spring, summer & fall. Adaptable to other areas of the state where not native. Good as ground cover or hedge. Really needs good drainage. Persistent (almost evergreen).	Abundant flowers provide copious nectar which is attractive to bees & especially hummingbirds. Ruby-throats can't seem to get enough. Provides food over the long hot summer for them when other plants have waned.
Hesperaloe parviflora Red yucca	Agavaceae - Agave Family	Succulent Leaves 2-3', Flower stalk 5'	Showy, coral to salmon pink flowers on tall stalk. May - Nov.	Capsules Aug. - Dec.	Full sun, part shade, dappled shade	Prefers prairies, rocky slopes & mesquite groves.	Sands, loams & clays; likes limestone soils. Xeric, well-drained.			X	X	X		X				Very elegant succulent, used alot in landscapes as an accent plant. Widely adaptable to various soils. Flowers bloom profusely and for a long time. Evergreen.	Ruby-throated and Black-chinned hummingbirds are highly attracted to flowers which provide copious nectar for long periods. White-tailed deer also love to eat the flowers.
Yucca constricta Buckley yucca	Agavaceae - Agave Family	Succulent 2' leaves 3'- 6' flower stalk	Showy panicles of creamy-white flowers. April - June	Capsules Sept. - Oct.	Full sun, part shade	Prefers brushy woods & grasslands.	Sands, loams & clays; likes limestone soils. Well-drained xeric.	X	X	X			X	X		X	X	Very striking accent plant, lovely when in bloom. This plant is the most flower-like of all the yuccas. Leaves are dark green with white edges. Older leaves get threads. Tips are armed with healthy spines. Evergreen.	Elegant waxy flowers emit their fragrance at night attracting moths which pollinate them. Flowers are edible and popular with white-tailed deer. Larval host plant to Yucca giant skipper.
Yucca rupicula Twist-leaf yucca	Agavaceae - Agave Family	Succulent 1'- 2' leaves 2'-4' flower stalk	Showy panicles of creamy-white flowers. April - June	Capsules Sept. - Oct.	Full sun, part shade	Endemic to Edwards Plateau; prefers limestone ledges, also on grass covered plains, in dense brush & on open woodlands.	Limestone soils. Well-drained, xeric.							X				Very striking accent plant, attractive when in bloom. Leaves are twisted & edged in white. Some have curly threads, others do not. Tips are armed with healthy spines. Very drought tolerant. Evergreen.	Waxy white flowers emit their fragrance at night attracting moths which pollinate them. Flowers are edible and popular with white-tailed deer. Larval host plant to Yucca giant skipper.
Ampelopsis cordata Heart-leaf ampelopsis	Vitaceae - Grape Family	Vine High climber	inconspicu-ous greenish flowers. May - June	Berries, bluish-purple Aug. - Nov.	Part shade, dappled shade, shade	Prefers rich woodlands & bottomlands along rivers & streams.	Sands, loams & clays; likes limestone, caliche-type soils. Well-drained, but moist	X	X	X	X	X	X	X		X		Vine with pretty heart-shaped leaves & bluish-purple fruit. Very fast growing climber. Deciduous.	A number of species of birds consume the fruit, including cardinals, bobwhite, woodpeckers, brown thrashers, hermit thrushes, finches & sparrows.

Campsis radicans Trumpet-creeper	Bignoniaceae Catalpa Family	Vine Climber to the sky	Showy orange tubular flowers in dense clusters June - Sept.	Capsule with winged seeds. Sept. - Nov.	Full sun, part shade	Tolerates a variety of soils throughout Eastern half of Texas	Sands, loams & clays Mesic; moderate moisture; poor drainage O.K.	X	X	X	X	X	X	X				Striking vine adapted to nearly every soil type. Excellent for hiding ugly structures. Sometimes can do too well & needs to be cut back. Persistent.	This is premier plant to attract hummingbirds. Both Ruby-throat and Black-chinned hummers are highly fond of it. Copious nectar sustains these beauties. The plant is also an excellent nectar source for the larger butterflies.
Clematis pitcheri Purple leatherflower	Ranunculaceae Buttercup Family	Vine Climber, high	Showy, purple nodding urn-shaped flowers June - Aug.	Achenes, filiform Sept. - Oct.	Part shade, dappled shade, shade	Prefers thickets, woodland borders, likes moist low ground	Sands, loams, clays; likes limestone soils. Mesic, prefers moist soils	X	X	X	X	X	X	X	X			This high climbing vine with the elegant smooth bright green leaves and lovely purple flowers will clamber over a trellis, trees, or shrubs. This species is fairly cold-hardy. Deciduous.	This vine provides good cover for small birds. A thick clump is an excellent place to hide from predators. Achenes eaten by a few species of birds.
Lonicera sempervirens Coral honeysuckle	Caprifoliaceae Honeysuckle Family	Vine Climber to 40'	Showy orange red tubular flowers in clusters. March - Dec.	Berries, red April - Jan.	Full sun, part shade	Prefers moist fertile soils of East Texas, woods & thickets	Sands & loams & clays. Mesic-hydric soils; poor drainage O.K.	X	X	X	X	X						A beautiful everblooming vine that grows well & is well-behaved. Likes morning sun & afternoon dappled shade. Needs extra water when getting established, but not later. Persistent.	Ruby-throated and Black-chinned hummers are attracted to this vine spring, summer and fall, esp. during migration. Orioles also sip nectar, as do butterflies. Fruit-eating birds relish the succulent red berries in the fall. LHP of Spring Azure.
Maurandya antirrhiniflora Snapdragon vine	Scrophulariaceae Figwort Family	Vine Climber to 3'	Showy purple flowers. March - Sept.	Capsule, round Sept. - Dec.	Full sun, part shade	Prefers limestone hills & bluffs, also dunes, shrubs & boulders.	Sands, loams, clays Mesic, well-drained.	X	X	X	X	X	X	X			X	Elegant, delicate-leafed climber & ground cover. Fast grower; tolerates salt. Looks great in a pot. Leaves have excellent fall color Perennial.	Fruits are a favorite with many species of birds. Flowers are a good nectar source for many kinds of insects, especially butterflies. Lush clumps provide good cover. Larval host plant of Buckeye.
Parthenocissus quinquefolia Virginia creeper	Vitaceae Grape Family	Vine Climber & ground cover	inconspicu-ous greenish flowers. May - June	Berries, blue-black. Sept. - Nov.	Full sun, part shade, dappled shade	Prefers rich soils of woodlands & thickets & rocky banks in eastern half of TX.	Sands, loams, clays. Tolerates gumbo soils. Well-drained, mesic	X	X	X	X	X		X				Very attractive vine with lush green palmate leaves. Vigorous climber well able to cloak walls, columns, etc by fastening on to masonry. Also good ground cover. Striking red-orange fall color. Deciduous.	Many species of birds compete for the blue-black berries including woodpeckers, kingbirds, great-crested flycatchers, titmice, cardinals, mockingbirds, bluebirds, warblers & sparrows.
Passiflora lutea Yellow passionvine	Passifloraceae Passionflower Family	Vine Climber to 3'	Showy whitish-yellow flowers May - Sept.	Fleshy globose fruit. Aug. - Nov	Part shade, dappled shade, shade	Prefers shady, low moist woods	Sands, sandy loams; likes limestone soils. Mesic, likes moist soils	X	X	X		X	X	X				Delicate looking vine with interestingly shaped leaves and complex flowers. Prefers moist & shady areas. Deciduous.	Flowers attract several kinds of insects, especially butterflies. Birds & small mammals partake of the fruit. Larval host plant of the Julia, Mexican & Gulf fritillaries, as well as Zebra & Crimson-patch longwing.

Vitis monticola Mountain grape	Vitaceae - Grape Family	Vine High climber	inconspicu-ous greenish flowers. April - May	Grapes, small & black, sometimes red Sept. - Oct.	Part shade, dappled shade, shade	Prefers limestone hills & ridges of the Texas Hill Country	Sands, loams & clays; likes limestone & caliche-like soil. Mesic, well-drained							X				Endemic Edwards Plateau grape with sweet fruit. Prefers soils underlain with limestone. Has small leaves for a grape and shorter flower clusters than most. Deciduous.	The sweet red to black grapes are highly sought after by various species of birds such as cardinals, bluebirds, mockingbirds, thrashers, thrushes, finches & sparrows. They will even devour them before they are fully ripe.
Bothriochloa saccaroides Silver bluestem	Poaceae Grass Family	Grass 2' - 4'	Flowering spikelets green to silver. May - Oct.	Seeds Sets seed shortly after flowering	Full sun, part shade	Prefers dryish open areas, woodland edges, along roadsides	Sands, sandy loams, loams & clays. Xeric-mesic	X	X	X	X		X					This grass becomes increasingly beautiful as its seed head ripens and catches the sun light, glowing silvery. This bunchgrass has a conspicuous basal cluster of leaves & stems. Warm-season perennial.	This bunch grass is a fairly good forage grass for white-tailed deer. Parts of the grass are used as nesting & denning material by birds & small mammals. Many species of seed-eating birds eat the ripe seeds.
Bouteloua curtipendula Sideoats grama	Poaceae Grass Family	Grass 2' - 6'	Spikelets, yellowish, arranged down along stem. May - Oct.	Seeds June - Nov.	Full sun, part shade, dappled shade	Tolerates a variety of open places throughout state. Does well in disturbed areas. Not as common in eastern forests.	Sands, loams & clays, both limestone & igneous soils. Well-drained, mesic-xeric.	X	X	X	X	X	X	X	X	X	X	Our state grass is a strong perennial and works well as a garden accent. Competes well with short grasses but not tall-grass prairie grasses. Great choice for wildflower meadow garden. Warm-season perennial bunch grass. Dormant in winter.	Provides good grazing for wildlife and an abundance of bird seed for seed-eating birds of several varieties. Food available spring, summer & fall. Grass parts used as nesting & denning material. Larval host plant for Dotted skipper & green skipper.
Elymus canadensis Canada wildrye	Poaceae Grass Family	Grass 3' - 5'	Flowering spikelets green turning gold, with long awns. March - June	Seeds May - Sept.	Full sun, part shade, dappled shade	Prefers shaded sites along fence rows, woods borders & moist ravines throughout state. Absent in southern part of South TX.	Sands, loams & clays Well-drained, mesic	X	X	X	X	X	X	X	X	X	X	This tufted grass with attractive seed heads does best in shady areas with adequate moisture. Cool-season tufted perennial.	Provides good early food for many species of birds & small mammals that eat grain. Grass parts, leaves, stems, & spikelets used as nesting & denning material. Larval host plant for Zabulon skipper.
Muhlenbergia lindheimeri Big muhly	Poaceae Grass Family	Grass 2' - 5'	Flowering spikelets silvery green to golden tan. July - Aug.	Seeds Sept. - Nov.	Full sun, part shade	Prefers limestone uplands near streams	Calcareous clays & limestone soils. Well-drained, mesic				X	X	X	X				This is a highly attractive bunch grass. Serves as a striking accent plant in any garden. Plant sports silvery golden plumes in the fall. Warm-season perennial.	Big muhly is a good forage grass for wildlife. Birds readily eat the ripe seeds. Grass parts are used for nesting & denning material.

Panicum virgatum Switchgrass	Poaceae Grass Family	Grass 3' - 6'	Flowering spikelets green turning rich gold. Aug. - Sept.	Seeds Oct. - Nov.	Full sun, part shade	Prefers seasonally moist, open areas throughout Texas.	Sands, loams & clays Moist. Seasonal poor drainage O.K.	X	X	X	X	X	X	X	X	X	X	Gorgeous tall-grass can be used as dramatic accent plant. Turns deep, rich golden color in fall. Has airy, filigreed seedhead. Can also be used in small pocket prairie. Does great in Houston, loves the extra water. Warm-season perennial bunch grass.	Provides fair grazing for wildlife, seeds sought after by seed-eating birds. Excellent sparrow food in winter. Provides good protective cover and nesting & denning material. Good place for butterflies to get out of the wind. LHP for Delaware skipper.
Schizachyrium scoparium Little bluestem	Poaceae Grass Family	Grass 2' - 5'	Flowering spikelets blue-green to silvery gold. Aug. - Dec.	Seeds Sept. - Dec.	Full sun, part shade	Prefers woods openings, rocky slopes of pastures & rangeland, along forest borders and prairies throughout Texas.	Sands, loams & clays Well-drained, mesic	X	X	X	X	X	X	X	X	X	X	Most wide-ranging bunchgrass in the state, a dominant of the tallgrass prairie. Tolerant of a wide variety of moisture & drought. Little bluestem is a symphony of beautiful color changes through the year from blue-green to coppery gold in the fall.	Provides fairly good grazing for wildlife. Good cover grass, grass parts provide denning & nesting material for birds & mammals. Larval host plant for Dusted skipper, Delaware skipper, Dixie skipper, Cross-line skipper & Cobweb skipper.
Sorghastrum nutans Indiangrass	Poaceae Grass Family	Grass 3' - 8'	Flowering spikelets a deep yellow. Oct. - Nov.	Seeds Nov. - Dec.	Full sun, some shade O.K.	Prefers moist rich soils of tall-grass prairies of central & coastal TX	Sands, loams & clays. Likes calcareous soils. Mesic, likes moisture.		X	X	X	X		X				This gorgeous grass was major component of tallgrass prairie. Striking accent plant or member of pocket tallgrass prairie. Does well in a naturally moist rich swale area. Warm-season perennial bunch grass. Dormant in winter.	Fairly good grazing for wildlife when green. Seed-eating birds and small mammals eat ripe seeds. Stems, leaves used as nesting & denning material. Provides excellent protective cover for wildlife. Larval host plant of Pepper-and-salt skipper.
Aquilegia canadensis Wild columbine	Ranuncu-laceae Buttercup Family	Wildflower 1' - 3'	Showy red & yellow tubular flowers. March - May	Follicle with seeds. May - July	Part shade, dappled shade, full shade	Prefers moist, shaded canyons growing in & around rock of cliff faces & boulders.	Sands & loams; likes limestone based soils Well-drained, mesic, likes moisture.	X		X	X	X		X				A hill country native that grows well in gardens where the soils are rich in organic matter & well-drained. Likes shade & extra moisture. Perennial.	Wild columbine is a wonderful hummingbird plant. Flowers also attract other varieties of insects.
Asclepias tuberosa Butterfly-weed	Asclepia-daceae Milkweed Family	Wildflower 1' - 2'	Showy orange complex flowers. April - Sept.	Follicle with comose seeds. June - Nov.	Full sun, part shade, dappled shade	Prefers prairies, meadows, open woods & thickets in Eastern Texas & west to Hill Country.	Sands, loams, clays & limestone soils Well-drained, mesic.	X	X	X	X		X					With its splashy orange, complex flowers, this is our most striking milkweed. It is very drought-tolerant once it is established and lives for a very long time. Has a big taproot. Perennial.	This milkweed is a larval host plant for Milkweed butterflies such as the Monarch and the Queen. The female lays her eggs on the stems & leaves of the plant. Caterpillars feed on the milky sap sequestering the secondary compounds making them poisonous.

Engelmannia pinnatifida Engelmann daisy	Asteraceae Sunflower Family	Wildflower 1' - 3'	Showy yellow daisy-like flowers. Feb. - Nov.	Achenes April - Dec.	Full sun, part shade, dappled shade	Grows in opens fields, meadows, along roadsides throughout much of the state.	Sands, loams & clays; neutral to calcareous soils. Well-drained, xeric to mesic.	X	X	X	X	X	X	X	X	X	X	Lemon-yellow flowers blanket the fields & roadsides especially in the spring. With a little extra water in your garden, these flowers will prolong bloom-time through the summer. Perennial.	Englemann daisy attracts a multitude of bees, butterflies & other insects which forage on the nectar. Seed-eating birds such as sparrows, buntings & finches dine on the ripe achenes in the fall.
Eupatorium havanense Shrubby boneset	Asteraceae Sunflower Family	Wildflower 1' - 5'	Showy white to pinkish flower heads, very fragrant. Aug. - Oct.	Achenes Oct. - Dec.	Full sun, part shade, dappled shade	Prefers limestone hills, rocky hillsides & bluffs of the Edwards Plateau.	Sands, loams & clays; likes rocky limestone soils. Mesic, likes moisture.							X				This late blooming shrubby wildflower with opposite deltoid leaves is much-branched and flat-topped with fragrant white to pink terminal flower clusters . Perennial.	Masses of white to pink flowers is an excellent nectar source for migrating Monarch butterflies & other late foraging insects. Many species of sparrows & finches eat the ripe achenes in winter. LHP of Rawson's metalmark.
Helianthus maximiliani Maximilian sunflower	Asteraceae Sunflower Family	Wildflower 4' - 6'	Showy bright yellow flowers Aug. - Oct.	Achenes Nov. - Dec.	Full sun, part shade	Prefers seasonally moist ditches & depressions in grasslands, prairies & meadows in Edwards Plateau, North & South East Texas.	Sands, loams, clays & limestone-based soils. Well-drained, xeric; tolerates seasonally poor drainage			X	X	X	X	X	X		X	With its bright yellow flowers, Maximilian sunflower is gorgeous in the fall. Does very well growing among native grasses in a pocket prairie. Occurs in colonies on both dry & moist ground. Perennial.	Maximilian sunflower provides copious nectar to butterflies & bees in the fall. RIpe seeds eaten by granivorous birds, especially sparrows.
Malvaviscus drummondii Turk's cap	Malvaceae - Mallow Family	Wildflower, shrub in South TX 4' - 9'	Showy red flowers. May - Nov.	Berry-like fruit, red, flattened. Aug. - Sept.	Part shade, dappled shade, shade	Prefers moist woodlands, wood margins, streamsides, river edges in shady conditions. Low grounds.	Sands, loams & clays. Likes limestone soils, tolerates gumbo. Hydric-mesic, likes moisture	X	X	X	X	X	X	X				A good ornamental for shady situations. Forms colonies in shady spots. Serves as good ground cover. Best pruned back after 2 years. Deciduous.	Attractive red flowers are very popular with hummingbirds. Butterflies, diurnal moths & other insects are also attracted to the flowers. The bland fruit is eaten by several species of birds & small mammals.
Pavonia lasiopetala Rose pavonia	Malvaceae - Mallow Family	Wildflower 2' - 5'	Showy pink flowers. May - Dec., sometimes all year.	Capsules July - Dec.	Full sun, part shade, dappled shade	Prefers rocky woods on Edwards Plateau & Rio Grande Plains	Sands, loams & clays, likes limestone soils. Well-drained, mesic to xeric.					X	X				X	Very attractive flowering perennial shrub. Leaves are scalloped & velvety to the touch. Numerous flowers open every morning & close in the afternoon. Requires little care beyond occasional watering & pruning. Perennial.	Lush pink flowers attract many species of butterflies & moths. Leaves are browsed by white-tailed deer.

Salvia roemeriana Cedar sage	Lamiaceae Mint Family	Wildflower 1' - 2'	Showy red tubular flowers. March - July	Nutlets May - Sept.	Part shade, dappled shade, full shade	Prefers rocky, shaded woods, canyon edges, bases of limestone outcrops in Edwards Plateau & Trans-Pecos	Sands, loams, clays & limestone-based soils. Well-drained, mesic							X			X	Cedar sage with its showy red tubular flowers & soft kidney-shaped leaves does supremely well in a shady garden. It makes a great ground cover, growing well in an Ashe juniper association. Perennial.	Black-chinned & Ruby-throated hummingbirds sip nectar from these plants which offer nectar when they first arrive from their wintering grounds. Plants are also popular in the Trans-Pecos to several other species of hummingbirds.
Viguiera dentata Golden-eye	Asteraceae Sunflower Family	Wildflower 3' - 6'	Showy yellow daisy-like flowers. Oct.	Achenes Nov.	Full sun, part shade	Prefers dry caliche soils of the Texas Hill Country & chalky cuestas of North Central Texas, Blackland Prairies & to a less extent in the Trans-Pecos.	Sands, loams, clays & limestone soils. Well-drained mesic.				X	X		X			X	This open busy perennial thrives at sunny edges of woods & tends to grow in large colonies. Extremely drought-tolerant, it can be absolutely magnificent in full bloom. Perennial.	Golden-eye provides a great deal of nectar to bees & butterflies foraging in the fall. Ripe achenes are relished by several species of small seed-eating birds. Also provides good protective cover. Larval host plant of the Bordered patch butterfly.
Ipomopsis rubra Standing cypress	Polemoniaceae Phlox Family	Wildflower 2' - 6'	Showy red-orange tubular flowers. May - June	Seeds elongate, swelling when wet. July - Aug.	Full sun, part shade, dappled shade	Prefers rocky or sandy ground in fields or along edges of woods in Edwards Plateau, Cross Timbers, Oak Woods & Prairies & East Texas. Also Piney Woods	Sands, loams & gravelly soils. Well-drained, mesic	X		X	X	X	X		X			With splashy red-orange flowers & elegantly divided threadlike leaves, standing cypress is a spectacular plant. It does not flower the first year seeds are planted but forms a low attractive basal rosette. Biennial.	Standing cypress is a wonderful hummingbird plant. Exerted yellow anthers & red tubular flowers attract any hummer in the area. Hummer's heads get yellow with pollen as they zip from flower to flower.
Rudbeckia hirta Brown-eyed Susan	Asteraceae Sunflower Family	Wildflower 1' - 2'	Showy yellow ray flowers with dark brown centers May - Sept.	Achenes July - Nov.	Full sun, part shade, dappled shade	Prefers open prairies, grasslands & woodland meadows in the eastern two-thirds of the state.	Sands, loams & clays Well-drained, mesic	X	X	X	X	X	X	X	X			Black-eyed Susans provide a lush splash of color in your meadow garden or pocket prairie. It does especially well if the rains are good or with a little extra watering. It will grow well in both partially shady areas & the sun. Annual.	Bees, butterflies & many other kinds of insects forage for nectar from these flowers all summer. In the fall when the flowers have good to seed, numerous seed-eating birds forage on the ripe achenes.
Thelesperma filifolium Greenthread	Asteraceae Sunflower Family	Wildflower 1' - 1 1/2'	Showy yellow daisy-like flowers. Feb. - Dec.	Achenes April - Dec.	Full sun, some shade O.K.	Prefers dry, calcareous soils on prairies throughout Texas. Rare in East Texas & Trans-Pecos	Sands, loams, clays & limestone based soils. Well-drained, xeric.		X	X	X	X	X	X	X	X		Looking much like Golden-wave, this attractive, daisy-like flower grows in large masses of golden yellow over large expanses of prairie habitats. This plant prefers lots of sun & excellent drainage for best results. Annual.	Greenthread attracts nectar-loving insects of all varieties, esp. bees & butterflies. Ripe achenes, after flowers have good to seed, are highly sought after by several species of granivorous birds like the Painted Bunting. LHP of Dwarf Yellow butterfly.

Verbena bipinnatifida Prairie verbena	Verbenaceae Vervain Family	Wildflower 6" - 12"	Showy magenta to purple flowers grouped in 2-flower heads. March - Dec.	Capsule-like fruit, dry (Schizocarp) May - Dec.	Full sun, some shade O.K.	Prefers prairies & fields throughout most of Texas, except for Trans-Pecos	Sands, loams, clays & limestone-based soils. Well-drained, xeric to mesic	X	X	X	X	X	X	X	X	X		Prairie verbena makes a great low-growing ground cover. Looks very good in rock gardens. Prefers full sun & limestone soils but will survive in others. Annual.	Prairie vervain is an excellent butterfly plant. When in bloom it is always attended by them as they daintily park on the conveniently shaped landing-platform-shaped flower heads.

Wildscapes Plant List -- Cross Timbers and Prairies

SPECIES	FAMILY	HABIT HEIGHT	FLOWER	FRUIT	SUN EXPOSURE	HABITAT	SOILS & MOISTURE REGIME	Regions 1	2	3	4	5	6	7	8	9	10	ORNAMENTAL VALUE	WILDLIFE VALUE
Bumelia lanuginosa v. oblongifolia Chittamwood	Sapotaceae - Sapodilla Family	Tree, large 30' - 80'	White perfect flowers, fragrant. June - July	Berries, blue-black. Sept. - Oct.	Full sun, Part shade	Mostly uplands, sometimes bottomlands, woodlands, edges and fencerows. This subspecies occurs on eastern half of Rolling Plains.	Sandy loams, loams, and clays. Tolerates gumbo. Well-drained, mesic	X		X	X	X	X	X	X		X	Large shade tree with simple green leaves with white woolly undersurface. Persistent.	Several species of birds feed on the fruit, including cardinals, finches, robins, cedar waxwings, warblers, and vireos. Good cover and nesting tree due to protective thorns. Good substrate for insectivorous birds.
Carya illinoinensis Pecan	Juglandaceae Walnut Family	Tree, large 50' - 60'	Inconspic-uous catkins, m & f, yellowish on same tree. March - May	Nut. Sept.-Oct.	Full sun, Part shade	Prefers rich bottomlands	Sands, loams, or clays. Well-drained, mesic	X	X	X	X	X	X	X	X			Beautiful shade tree with elegant compound leaves. Prefers deep, rich soils but will grow in thinner soils. Sometimes turns yellow in fall. Deciduous.	Sweet edible nuts valuable for all kinds of wildlife, birds and mammals alike including woodpeckers, jays, sparrows, fox squirrel, gray squirrel, opossum, and raccoons. Good substrate for insectivorous birds. Larval host plant for Gray hairstreak.
Celtis laevigata Sugarberry	Ulmaceae - Elm Family	Tree, large 40' - 60'	Inconspic-uous, small, greenish. May - June	Berry (drupe), orange-red to purplish-black. July - Aug.	Full sun, part shade	Rocky or alluvial soils along streams, in woodlands & thickets.	Sands, loams, and clays. Prefers rich soils, but will tolerate wide range. Well-drained, mesic to xeric; drought tolerant once established.	X	X	X	X	X	X	X	X	X	X	Fast-growing shade tree adapted to most soils. Very drought tolerant. Yellow autumn color. Deciduous.	Fruit eaten by bluebirds, robins, cardinals, mockingbirds, cedar waxwings, thrashers, & sparrows. Good nest & cover tree, esp. for neotropical migrants. Larval food plant for Question Mark, Mourning Cloak, Pale Emperor, Snout & Hackberry butterflies.
Fraxinus pensylvanica Green ash	Oleaceae - Olive Family	Tree, large 30' - 80'	Inconspic-uous m & f yellowish catkins & spikes. April - May	Samara Sept. - Oct.	Full sun, part shade	Alluvial woods & swamps along rivers & streams, swales & depressions in prairies	Acid sands, sandy loams & heavy limestone clays. Needs moisture; poor drainage O.K.	X	X	X	X	X	X	X	X			Fairly fast-growing & long-lived shade tree with opposite, compound, deciduous leaves. Brilliant yellow autumn color. Requires quite a bit of moisture. This widespread ash is considered somewhat shade intolerant. Deciduous.	Excellent cover and nesting tree. Cardinals, finches, red-winged blackbirds relish fruit. Foliage browsed by cottontails and white-tailed deer. Larval host plant for Two-tailed tiger swallowtail and Tiger swallow-tail.

Juglans nigra Black walnut	Ulmaceae - Elm Family	Tree, large 40' - 80'	Inconspic-uous catkins, m & f, yellowish-green. April - May	Walnut Sept. - Oct.	Full sun, part sun	Deep, rich soils of woodlands. Prefers deep alluvial soils that are rich in calcium.	Limestone soils, rich in calcium. Well-drained, Mesic		X	X	X	X		X	X			Shade tree with graceful appearance and fast growth rate. Immune to pests. Requires a fairly constant source of moisture. During long hot summers, may need some extra water. Deciduous.	Nuts are preferred food of squirrels which disperse seeds. Woodpeckers, jays and gamebirds also like nuts. Good cover and nest tree for birds. Larval host plant of the Banded hairstreak.
Platanus occidentalis Sycamore	Platanaceae - Sycamore Family	Tree, large 100' - 150'	Inconspic-uous m & f globose heads reddish, greenish. April - May	Round seed head. Sept. - Oct.	Full sun, part shade	Rich bottomland soils along streams and creek bottoms	Sands, sandy loams, and clays. Well-drained, mesic	X	X	X	X	X	X	X				Majestic shade tree. Fast-growing with pretty leaves and bark. Prefers deep, rich, moist soils esp. those found along riverbanks. Deciduous.	Globose fruit with seeds eaten by a variety of birds and mammals, including muskrat. Goldfinches, purple & house finches are especially fond of fruit. Good substrate for insectivorous birds.
Populus deltoides Eastern cottonwood	Salicaceae - Willow Family	Tree, large 40' - 100'	Inconspic-uous m & f catkins red & brown. March - June	Brown f capsules with cottony seeds. May - June	Full sun, part shade	Rich bottomland soils along streams	Sands, loams, and clays. Well-drained, mesic	X	X	X	X	X	X	X	X			Very large shade tree with fluttery green leaves. Fast-growing with excellent fall color. Easy to establish. Grows in almost any soil type but prefers sandy loams along the edges of streams. Easily propagated by cuttings. Deciduous.	Foliage, bark, seeds & leaves important to wildlife esp. deer & rabbits. Seeds eaten by many birds, esp. grosbeaks & cardinals . Cottony seeds used to line nests. Larval host plant for Mourning Cloak, Red-spotted Purple, Viceroy & Tiger Swallowtail.
Quercus fusiformis Plateau liveoak	Fagaceae - Beech Family	Tree, large 30' - 50'	Inconspic-uous m & f catkins borne separately on same tree, yellow-green & red. March	Acorns Sept. - Oct.	Full sun, part shade	Prefers calcareous substrate, rocky limestone soils of the Hill Country.	Sands, loams, clays. Prefers limestone & caliche type soils. Will grow on any alkaline to slightly acid soil. Well-drained, xeric-mesic.		X	X	X	X	X	X	X			Plateau liveoak is an excellent evergreen shade tree often found growing in mottes. Adapts to a variety of sites, but not extremely wet or dry ones. Evergreen.	Excellent cover & nesting tree. Acorns have high energy value & eaten by almost all forms of wildlife: deer, squirrels, fox, raccoons, gamebirds, woodpeckers, & jays. Fine substrate for insectivorous birds. LHP of 3 hairstreak species and duskywing.
Quercus macrocarpa Bur oak	Fagaceae - Beech Family	Tree, large 60' - 80'	Inconspic-uous m & f catkins, red & greenish. March - April	Acorns Sept. - Oct.	Full sun, part shade	Prefers moist forests along streams & in fallow fields	Sands, loams, and clays, esp. limestone soils. Well-drained, mesic.		X	X	X	X		X	X			Very graceful shade tree, widely adaptive, fast-growing for an oak. Attractive leaves, unusual acorn, drought resistant & long-lived. Prefers the limestone soils along riverbanks, but does not require extra watering during dry spells. Deciduous.	Important source of food for several species of birds, woodpeckers, jays, game birds. Also sought after by mammals, white-tailed deer, squirrels & raccoons. Good substrate for insectivorous birds. Larval host plant for Sleepy & Juvenal's Duskywing.

Quercus marilandica Blackjack oak	Fagaceae - Beech Family	Tree, large 40' - 60'	Inconspic-uous m & f catkins, red & greenish. April	Acorns, every 2 years. Nov. - Dec.	Full sun, part shade	Prefers upland forests of timber belt in East & Central Texas.	Sands, sandy loams, loams & clays. Tolerates dry, sandy, gravelly soils. Well-drained, mesic-xeric	X	X	X		X		X	X			Beautiful shade tree often associated with Post oak. Leaves are dark green, distinctive & puppet-shaped. Slow-growing & hard to transplant. Can tolerate relatively poor conditions. Deciduous.	Provides dense canopy cover. Good nesting tree & substrate for insectivorous birds. Turkey & deer love acorns. Woodpeckers, jays, & doves eat & cache them. Smaller wildlife eat crushed ones. LHP of Juvenal's, Horace's duskywings & White M hairstreak.
Quercus stellata Post oak	Fagaceae - Beech Family	Tree, large 40' - 50'	Inconspic-uous catkins, m & f, reddish. March - May	Acorns Sept. - Nov.	Full sun, part shade	Prefers dryish uplands, also grows in moister areas in East Texas.	Sands, sandy loams, prefers acid soils. Also neutral clays. Well-drained, mesic	X	X	X	X	X	X	X	X			Slow-growing oak with maltese-cross leaves. Widespread in Texas. Rugged shade tree good in otherwise inhospitable conditions. Winter silhouettes strikingly dramatic. Provides dense canopy cover. Dominant in sandy areas in north & east central Texas.	Good nesting & cover tree; fine substrate for insectivorous birds. Turkey & deer relish acorns as do doves, woodpeckers & jays. Smaller birds eat crushed ones that fall on ground. LHP for Northern hairstreak, Horace's & Juvenal's duskywings.
Sapindus drummondii Western soapberry	Sapindaceae - Soapberry family	Tree, large 15' - 50'	Clusters of small white flowers. May - June	Round, amber, wrinkled berry-like fruit with 1 seed. Sept. - Oct.	Full sun, part shade	Prefers moist soils along streams & fencerows, scattered throughout Texas	Sands, loams & clays, likes limestone soils. Well-drained, mesic	X	X	X	X	X	X	X	X	X	X	Fine-looking shade tree with dependable yellow fall foliage. Translucent amber fruits have white seeds which are poisonous to us. Moderately fast growing; also tolerates poor sites. Forms thickets but does not live long. Deciduous.	Fruit highly prized by many kinds of birds that are not affected by poison. Bluebirds, robins, cedar waxwings devour them. Small flowers provide nectar to various insects. Good nest & cover tree. Substrate to insectivores. LHP to Soapberry hairstreak.
Ulmus americana American elm	Ulmaceae Elm Family	Tree, large 40' - 80'	Inconspic-uous red to green flowers. Feb.- April	Samara March - June	Full sun, part shade	Prefers rich soils along streams & lowland areas	Sands, loams & clays Well-drained, mesic	X	X	X	X	X		X	X			Excellent shade tree turning yellow gold in autumn. Fast growing & handsome shape. Long-lived. Larval host plant to Comma, Question Mark, Mourning Cloak & Painted Lady. Deciduous.	Seeds & buds eaten by gamebirds, woodpeckers, chickadees, robins, vireos, sparrows, orioles & finches. Good cover & nest tree with plenty of insects for insectivorous birds. Deer browse leaves; squirrels, foxes & rabbits eat seeds & buds.
Ulmus crassifolia Cedar elm	Ulmaceae - Elm Family	Tree, large 30' - 60'	Inconspic-uous greenish flowers. July.- Sept.	Samara Aug. - Oct.	Full sun, part shade	Prefers woodlands, ravines & open slopes	Sands, loams & clays. Seasonal poor drainage O.K.	X	X	X	X	X	X	X	X			Good shade tree, each with a unique shape. Fast growing & long lived. Excellent yellow fall color. LHP for Mourning Cloak & Question Mark. Deciduous.	Seeds & buds eaten by gamebirds, woodpeckers, chickadees, finches, sparrows & warblers. Good nesting and cover tree with lots of insects for insectivorous birds. Deer browse leaves; squirrels, foxes & rabbits eat seeds & buds.

Celtis reticulata Net-leaf hackberry	Ulmaceae - Elm Family	Tree, large to medium. 15' - 30'	Inconspic-uous greenish flowers, small & perfect. May - June	Drupe, orange-red. Aug. Sept.	Full sun, part shade	Prefers wooded limestone slopes. Mostly restricted to North Central, Central & parts of South Texas.	Sands, loams, & clays. Likes limestone & caliche-type soils. Well-drained, mesic-xeric.	X		X	X		X	X	X	X	Can grow to be a shade tree with thickish rough-surfaced leaves with net-like veins on undersurface. Trees are strongly taprooted & extremely drought-tolerant. Deciduous.	Fleshy fruits persist on this tree in the winter making it a valuable food source for all kinds of birds: robins, cedar waxwings, bluebirds, cardinals, finches & sparrows. Fine substrate for insectivorous birds. LHP for hackberry, snout & ? butterflies.
Diospyros texana Texas persimmon	Ebenaceae - Ebony Family	Tree, small 15' - 40'	Small greenish white flowers, fragrant. March	Fruit, small, round black & fleshy with lots of seeds. June - July	Full, part shade	Prefers limestone hills, shinnery oak dunes, breaks & rocky canyons, mesquite groves, areas along water courses.	Sands, loams & clays Well-drained, xeric.	X	X	X	X	X	X			X	Very attractive tree with smooth gnarled grayish bark and small leathery leaves. Quite drought-resistant once established. Deciduous.	Fragrant whitish flowers attract insects of many kinds. Ripe fruits eaten by several species of game & song birds. Mammals, especially javelina, relish the fruit. Leaves browsed by white-tailed deer. Larval host plant for Gray hairstreak & Henry's elfin.
Fraxinus texensis Texas ash	Oleaceae Olive Family	Tree, small 30' - 40'	Small m flowers, f flowers in clusters, purplish. Feb. - March	Samara Aug. - Sept.	Full sun, part shade	Prefers canyons, bluffs, rocky slopes, open woodlands, near lakes in Edwards Plateau & Western Cross Timbers.	Sands, loams & clays. Likes limestone soils. Well-drained, xeric-mesic.			X	X	X	X				Short-trunked medium-sized tree with contorted branches. Has beautiful reddish-yellow fall color. Long-lived & healthy & very drought tolerant. Flowers & fruit quite decorative. Deciduous.	Good substrate for insectivorous birds. Fine nesting & cover tree. Several species of birds relish both flowers & fruits, esp. finches, cardinals & grosbeaks. Foliage browsed by rabbits, porcupine & white-tailed deer.
Ilex decidua Deciduous Holly	Aquifoliaceae Holly Family	Tree, small 10' - 30'	Inconspic-uous m & f flowers on separate trees. March - May	Drupes, orange-red on female tree. Sept. - Feb	Full sun, part shade	Prefers moist areas near streams and woodlands	Sands, loams & clays Well-drained, mesic. Seasonal poor drainage O.K.	X	X	X	X	X		X			Good understory tree or accent tree with spreading open crown, often with inclined trunk. Female trees have red berries held over winter, very ornamental. Deciduous.	Fruits are eaten by several species of birds, bobwhite, doves, robins, cedar waxwings, bluebirds, jays & mockingbirds. Squirrels, opossum, rabbits & fox eat berries too. Flower nectar & pollen attract several insects. Good nest tree.
Juglans microcarpa Little walnut	Juglandaceae Walnut Family	Tree, small 10' - 30'	Inconspic-uous m & f flowers, greenish, on same trees. March - April	Walnut, small Sept. - Oct.	Full sun, part shade	Prefers rocky areas near streams, arroyos & rocky ravines in Central, South & West Texas. Occurs in Red Rolling Plains in Crosby, Donley, Floyd, Motley & Taylor counties.	Loams, clays. Likes rocky limestone soils. Well-drained, mesic.				X		X	X		X	A man-trunked small tree with a long tap root. Often hybridizes with Arizona walnut. Quite disease resistant. Deciduous.	Produces small walnuts with high-quality meat eaten by rock squirrels & other small mammals. Gamebirds & songbirds also favor nuts. Good nesting & cover tree. Larval host plant of the Banded hairstreak.

Morus rubra Red mulberry	Moraceae Fig Family	Tree, small 35' - 40'	Inconspic-uous m & f greenish flowers. March - June	Mulberry - syncarp of aggregat-ed red-black drupelets. April - Aug.	Full sun, part shade, dappled shade	Prefers rich soils along streams, creek bottoms & moist woodlands	Sands, loams & clays. Well-drained, mesic	X	X	X	X	X	X	X	X		X	Handsome understory tree with polymorphic leaves, reddish black fruit and broad spreading crown. Deciduous.	Red mulberries are the prime source of spring fruit for neotropical migrant birds. 21 species devour them as soon as they ripen as do squirrels, raccoons, opossums & skunks. Larval host plant for Mourning Cloak.
Prosopis glandulosa Honey mesquite	Leguminosa e Legume Family	Tree, small 20' - 30'	Showy creamy yellow elongated spike-like racemes. May - Sept.	Legumes in loose clusters. Aug. - Sept.	Full sun, part shade	Tolerates wide range of situations, open fields, edges of woodlands, etc.	Sands, loams & clays. Well-drained, xeric	X	X	X	X	X	X	X	X	X	X	Attractive tree with crooked, drooping branches, feathery leaves & rounded crown. Fast growing & often shrubby, forming thickets. Fixes nitrogen in the soil. Deciduous.	Good nectar plant for bees & other insects. Many species of wildlife like quail, bobwhite, doves depend on it for food & shelter from the sun. Squirrels, coyotes, skunks, rabbits &deer eat pods. LHP for Long-tailed skipper & Reickert's blue.
Rhamnus caroliniana Carolina buckthorn	Rhamnacea e - Buckthorn Family	Tree, small 12' - 20	Inconspicuo us, small greenish-yellow flowers May - June	Drupes, reddish brown. Aug. - Sept.	Full sun, part shade, shade	Prefers moist woods, fence rows, along creeks, heads of draws & canyon slopes.	Sands, loams & clays. Well-drained, mesic	X	X	X	X	X	X	X				Very attractive understory tree with pretty leaves and berries. Quite ornamental and adapted to a wide range of sites. Has good fall color & fruits borne over a long time. Deciduous.	When ripe, fruits are devoured by several species of birds, i.e. thrashers, robins, mockingbirds, cardinals, finches, etc. Flowers are good nectar source for bees, butterflies & other insects. Larval host plant for Gray hairstreak.
Rhus lanceolata Lance-leaf sumac	Anacardiace ae Sumac Family	Tree, small 10' - 20'	m & f flowers, small greenish white, on separate trees. June	Drupes, small red, in clusters, remain after leaves fall. Sept. - Dec.	Full sun, part shade	Occurs on limestone & in calcareous soils, woodlands & roadside edges, along fencerows. Tolerates disturbed soils.	Sands, sandy loams, neutral clays, likes limestone soils. Well-drained, mesic				X	X		X			X	Sometimes thicket-forming small tree with elegant compound leaves and showy red fruit clusters. Only trees with f flowers have fruit. Leaves turn a beautiful red color in the fall. Fast growing with a very attractive shape. Deciduous.	Fruit is eaten by more than 20 species of birds, favored by quail & turkey. Flowers attract numerous insects in spring, good nectar source for bees & butterflies. Leaves browsed by deer. Larval host plant for Red-banded hairstreak.
Zanthoxylum clava-herculis Hercules'-club	Rutaceae - Citrus Family	Tree, small 20' - 40'	Showy, greenish-yellow cymes, distinctive odor. March - April	Capsule Aug. - Sept.	Full sun	Prefers deep heavy soils on disturbed or abandoned cropland, along fence rows.	Sands, loams, acid or neutral. Well-drained, mesic	X	X	X	X	X	X					Aromatic small tree with interesting trunk sporting warty protuberances. Intolerant of shade Deciduous.	Birds eat the seeds which explains why so many have proliferated under telephone wires along fence lines. Larval host plant for the beautiful Giant swallowtail
Aesculus glabra v. arguta Texas buckeye	Hippo-Castanacea e - Horse chestnut Family	Ornamen- tal tree or shrub 15' - 40'	Showy yellowish-green panicles of tubular flowers. March - May	Capsule, round & leathery. Sept. - Oct.	Part shade, dappled shade, shade	Prefers moist, rich soils in woodlands, along river banks. Prefers northern exposures.	Sands, loams & clays. Well-drained, mesic. Moderate moisture	X		X	X	X		X				Showy small tree or shrub with rounded crown. Has distinctive flower clusters and attractive pointy palmate leaves. Good understory tree. Deciduous.	The yellowish-green tubular flowers are attractive to insects. Good protective cover shrub. White-tailed deer will not browse the leaves of this tree. Seeds are poisonous, however, and not eaten by wildlife.

Cercis canadensis v. texensis Texas redbud	Leguminosae Legume Family	Ornamen- tal tree. 10' - 30'	Showy magenta pea-like flowers. March, before leaves.	Legumes brownish-red, in clusters Sept.	Full sun, part shade, dappled shade	Prefers thinner calcareous, rocky soils of Edwards Plateau & North Central Texas.	Sands, loams & clays; likes limestone soils. Well-drained, mesic; but less moisture than Eastern variety.				X	X		X	X			Highly ornamental and showy small tree with spreading, flat or rounded crown. Good understory tree or accent plant. Fast growing, usually with single trunk. Leaves have distinctive kidney shape & are shinier than other subspecies of Redbud. Deciduous.	Beautiful magenta flowers are copious early nectar source for butterflies, moths, bees, etc. Seeds are eaten by a number of species of birds; foliage browsed by white-tailed deer. Larval host plant to Henry's Elfin.
Crataegus viridis Green hawthorn	Rosaceae - Rose Family	Ornamen-tal tree 20' - 35'	Showy, white perfect flowers. March - April	Pome (apple-like fruit) orange or red in color. Sept. - Nov.	Full sun, part shade	Prefers low, wet alluvial woods, also sandy fields in East Texas & Upper Texas Coast.	Sands, loams & clays. Medium to high moisture. Seasonal poor drainage O.K.	X	X	X	X	X		X				Medium-sized tree forming a broad rounded crown, serrated dark green shiny leaves, with bark that shreds into small scales. Often thornless. Deciduous.	Beautiful white flowers with yellow stamens attract bees & butterflies. Red orange haws disappear quickly, highly prized by several species of birds & mammals. Good cover & nesting tree. Larval host plant for some Hairstreaks.
Prunus mexicana Mexican plum	Rosaceae - Rose Family	Ornamen-tal tree 15' - 35'	Showy, white perfect flowers, fragrant. Feb. - April	Plum, red-purple. Sept. - Oct.	Full sun, part shade	Prefers river or creek bottoms, hardwood slopes & hillsides, & prairies.	Sands, loams & clays. Well-drained, mesic	X	X	X	X	X		X				Medium sized, single-trunked ornamental tree with broad crown and satiny silver bark with dark fissures. Excellent accent plant with heavenly fragrance when in bloom. Deciduous.	Early spring clouds of white flowers are wonderful nectar source, attracting bees, butterflies & diurnal moths. Gamebirds, songbirds & several species of mammals feast on the ripe plums. Larval host plant for Tiger swallowtail.
Sambucus canadensis American elderberry	Caprifoliaceae Honeysuckle Family	Ornamen-tal shrub or small tree 15' - 30'	Showy white 4-8' flower clusters. June - Sept.	Berries, blue-black. Sept. - Nov.	Full sun, part shade	Prefers wet soils in low places esp. along streams & swamp edges.	Sands, loams & gravelly clays. Hydric-mesic. Tolerates poor drainage.	X	X	X	X	X		X				Attractive erect shrub with white flower pompoms which prefers moist conditions in alluvial soils. Has attractive pinnate leaves. It loves extra water and will grow fast if well supplied. Can stand a certain amount of drought, though. Persistent.	Flowers are an excellent source of nectar for bees, butterflies, diurnal moths & other insects. Fruits are eaten by several species of birds, including gamebirds & songbirds. Small mammals also relish the ripe fruit. Leaves are browsed by deer.
Sophora affinis Eve's necklace	Leguminosae Legume Family	Ornamen-tal small tree 15' - 30'	Showy clusters of pinkish-white flowers. May	Legume black in color, looks like necklace, constric-tions between seeds. Sept.	Full sun, part shade, dappled shade	Prefers fields, woodlands, occurs along rights-of-way of Central & north east Texas.	Sands, loams & clays. Well-drained, mesic				X	X		X				Ornamental understory tree with pretty compound leaves and showy pink flower clusters. Fast growing. Deciduous.	Ring-tailed cats are known to eat the fruits and the foliage is browsed by white-tailed deer. The seeds are poisonous for most. Nectar of flowers attracts various bees, diurnal moths & butterflies.

Ungnadia speciosa Mexican buckeye	Sapindaceae - Soapberry Family	Ornamental tree or large shrub 15' - 30'	Showy clusters of pink-magenta flowers cloak branches, before leaves. March - May	Capsules-tripartite leathery buckeyes brown-black. Oct. - Nov.	Full sun, part shade	Prefers rocky areas in canyons, slopes & ridges & along fencerows.	Sands, loams & clays. Well-drained, mesic	X	X	X	X	X		X			X	Showy, small, shrubby often multi-trunked ornamental with irregular shape. Spectacular pink blossoms in spring. Good understory tree, prefers at least half a day in sun. Has pretty yellow fall color also. Deciduous.	Splashy pink flowers are a good nectar source for bees, butterflies, diurnal moths. Good honey plant. Sweet seeds eaten by a few species of birds and mammals, though poisonous to humans. Larval host plant for Henry's Elfin.
Viburnum rufidulum Rusty black-haw viburnum	Caprifoliaceace - Honeysuckle Family	Ornamental tree or large shrub. 20' - 30'	Showy creamy-white clusters of flowers. March - May	Berries, bluish-black (drupes). Sept. - Oct.	Full sun, part shade	Prefers moist soils along streamsides, in open woods & thickets.	Sands, loams & clays, esp. limestone soils. Well-drained, mesic	X	X	X	X	X		X	X		X	Small, single-trunked, ornamental with broad crown. Attractive as understory tree, also beautiful in the open. Leaves very glossy, turning red, mauve or orange in fall. Slow growing, staying shrub size for a long time. Deciduous.	Flowers are good nectar source for bees, butterflies & other insects. Fruits relished by several kinds of birds & small mammals. Robins, cedar waxwings, cardinals, bluebirds & mockingbirds love fruit, as do squirrels, opossum, raccoons & rabbits.
Juniperus ashei Ashe juniper	Cupressaceae Cypress Family	Conifer 10' - 30'	Inconspicuous February	Cones, fleshy & berry-like. Aug. - Sept.	Full sun, part shade	Prefers rocky soils in canyons, ravines, arroyos, rimrock & breaks; on eroded slopes & flats.	Sands, loams & clays likes limestone soils. Well-drained, xeric				X	X	X	X				Multi- or single-trunked thick evergreen tree with wonderfully shaggy bark. Leaves scale-like, dark green & aromatic. Female plant with large blue fruits. Dominant plant of the hill country. Evergreen.	Bark strips used as nest material by the Golden-cheeked warbler. Blue fruits a winter-time favorite of wildlife: bluebirds, robins, cedar waxwings, cardinals, finches & mammals. Good substrate for insectivorous birds. LHP of Olive & Juniper hairstreak.
Juniperus virginiana Eastern red-cedar	Cupressaceae Cypress Family	Conifer 30' - 60'	Inconspicuous m catkins, f cones, appearing on separate trees. March - May	Cones, berry-like, bluish, sweet & resinous when ripe. Aug. - Dec.	Full sun, part shade, dappled shade	Prefers dry hillsides, old fields, pastures, areas along fence rows.	Sands, loams & clays Well-drained, mesic. Tolerate dry land.	X		X	X	X			X	X		Evergreen tree of variable shape, with scalelike or appressed leaves. Foliage is dense and aromatic. Often planted as an ornamental. Long-lived and slow-growing. Evergreen.	Dense-foliaged tree is excellent cover and nesting tree. Bluebirds, mockingbirds, robins, cedar waxwings, thrashers, warblers, finches & sparrows relish fruit, esp. in winter. Opossum also eat fruit. Larval host plant to Olive hairstreak.
Amorpha fruticosa False indigo	Leguminosae Legume Family	Shrub 5' 10'	Showy purple flower spikes with yellow anthers. April - May	Pods, clustered, small & brown. July - Aug.	Full sun, part shade	Prefers low areas at the water's edge, along streams.	Sands, loams & clays Mesic, seasonally poor drainage O.K.	X	X	X		X	X					This moisture loving shrub is notable for its beautiful flowers, attractive leaves & airy form. Relatively fast growing. Deciduous.	Flowers are a good nectar source for bees, butterflies & other insects. Leaves are browsed by deer. Larval host plant for Dogface butterfly, Gray hairstreak, Silver-spotted skipper, Hoary edge skipper.
Callicarpa americana American beauty-berry	Verbenaceae - Vervain Family	Shrub 3' - 9'	Small clusters of white or pink flowers at nodes. May - July	Berries, magenta, in clusters at nodes. Aug. - Nov.	Part shade, dappled shade.	Prefers moist soils of canyons and bottomlands, woods & thickets.	Sands, loams & clays. Likes rich soils. Well-drained, mesic.	X	X	X	X	X		X				Open, much branched shrub with showy magenta berries. Has mounding form. Likes to be watered during dry periods. Deciduous.	Fruits are favored by several species of birds, i.e.., bobwhite, mockingbirds, cardinals, thrashers, robins, finches & towhees. Raccoons, opossum & gray fox also relish berries.

Cephalanthus occidentalis Buttonbush	Rubiaceae - Madder Family	Shrub 5' - 20'	Showy, creamy white round heads June - Sept.	Capsule clusters, round & dark brown. Aug. - Nov	Full sun, part shade	Prefers moist soils near swamps, ponds, along streams & stream margins.	Sands, loams, clays. Likes limestone soils. Mesic/hydric. Moderate to high moisture. Seasonally poor drainage O.K.	X	X	X	X	X	X	X	X	X	X	Shrub or small tree growing in low areas, often with swollen base. Leaves opposite & whorled. , variously shaped. Bright yellow anthers around white flower balls create a halo effect. Highly ornamental. Suitable for bog or pond area. Deciduous.	Flowers attract hordes of bees, butterflies & other insects. Fruits are highly favored by more than 25 species of birds, including waterfowl, cardinals, finches, sparrows, etc.
Forestiera pubescens Elbowbush	Oleaceae - Olive Family	Shrub 5' - 10'	Showy yellow bracts appear before leaves, early in spring. Feb.	Berries, bluish-black (drupes). June - Oct.	Full sun, part shade, dappled shade	Prefers open pastures, brushy prairies, woodlands & thickets	Sands, loams, & clays. Well-drained soils, mesic to semi-dry.				X	X		X				Straggling, irregularly shaped shrub. Though not beautiful, this is the first shrub to bloom in spring. Opposite softly fuzzy leaves and blue-black berries. Deciduous.	Yellow flowers appear early in spring providing early nectar source for bees, butterflies & other insects. Berries are eaten by several species of birds & small mammals. Leaves are browsed by white-tailed deer.
Lantana horrida Lantana	Verbenaceae Vervain Family	Shrub 3' - 6'	Showy yellow & orange heads made up of tiny florets. May to December.	Berries, green then dark blue-black. Sept. - Nov.	Full sun, part shade	Occurs in fields, thickets, swamps, rich sandy woods, scrub & gravelly hills.	Sands, loams & clays. Well-drained, xeric to mesic.	X	X	X	X	X	X	X				This showy shrub is planted for its long, profuse blooming season. Though not a native of Texas, it can be planted almost throughout the state. It loves the hot weather. It's good to prune it back to the ground each winter. Deciduous.	Colorful, long-blooming flowers attract both butterflies and hummingbirds throughout the season. Northern cardinals and other species of birds eat the ripe fruit. Fairly deer resistant. Larval host plant of the Painted Lady.
Rhus aromatica Fragrant sumac	Anacardiaceae Sumac Family	Shrub 3' - 8'	Inconspicuous yellow flowers appearing before leaves. Feb. - March	Berries, red May - June	Full sun, part shade, dappled shade.	Prefers limestone outcrops, rocky slopes, prairies, & mesquite plains.	Sands, loams & clays. Likes limestone soils. Well-drained, mesic .	X	X	X	X	X	X	X	X	X	X	Aromatic shrub with pretty leaves & early flowers. Tends to form thickets & is irregularly branched. Deciduous.	Early flowers provide early nectar source for insects like bees, butterflies & moths. The red berries are one of the earliest summer fruits making it popular with several species of birds & small mammals. Larval host plant to Red-banded hairstreak.
Salvia greggii Autumn sage	Lamiaceae - Mint Family	Shrub 2' - 4'	Showy magenta red flowers, also comes in white, pink or coral. April - Dec.	Nutlets June - Dec.	Full sun, part shade	Prefers rocky soils in central, south & west Texas.	Sands, loams & clays. Likes limestone soils, esp. Well-drained, mesic-xeric.				X		X	X			X	Aromatic showy shrub which blooms prolifically spring, summer & fall. Adaptable to other areas of the state where not native. Good as ground cover or hedge. Really needs good drainage. Persistent (almost evergreen.)	Abundant flowers provide copious nectar which is attractive to bees & especially hummingbirds. Ruby-throats can't seem to get enough. Provides food over the long hot summer for them when other plants have waned.

Hesperaloe parviflora Red yucca	Agavaceae - Agave Family	Succulent Leaves 2-3' Flower stalk 5.'	Showy, coral to salmon pink flowers on tall stalk May - Nov.	Capsules Aug. - Dec.	Full sun, part shade, dappled shade	Prefers prairies, rocky slopes & mesquite groves	Sands, loams & clays; likes limestone soils. Xeric, well-drained.			X	X	X		X				Very elegant succulent, used alot in landscapes as an accent plant. Widely adaptable to various soils. Flowers bloom profusely and for a long time. Evergreen.	Ruby-throated and Black-chinned hummingbirds are highly attracted to flowers which provide copious nectar for long periods. White-tailed deer also love to eat the flowers.
Yucca arkansana Thread-leaf yucca	Agavaceae - Agave Family	Succulent 2' leaves 3'- 6' flower stalk	Showy panicles of creamy-white flowers. May - June	Capsules Aug. - Sept.	Full sun, part shade	Prefers prairies, limestone outcrops & rocky areas	Sands, loams & clays. Well-drained xeric.		X	X	X	X						Very striking accent plant, magnificent when in bloom. This plant is the most flower-like of all the yuccas. Leaves are pale green edged with fine, curly white hairs. Tips are armed with healthy spines. Can tolerate shade. Evergreen.	Elegant waxy flowers emit their fragrance at night attracting moths which pollinate them. Flowers are edible and popular with white-tailed deer. Larval host plant to Yucca giant skipper.
Campsis radicans Trumpet-creeper	Bignoniaceae Catalpa Family	Vine Climber to the sky	Showy orange tubular flowers in dense clusters. June - Sept.	Capsule with winged seeds. Sept. - Nov.	Full sun, part shade	Tolerates a variety of soils throughout Eastern half of Texas	Sands, loams & clays Mesic; moderate moisture; poor drainage O.K.	X	X	X	X	X	X	X				Striking vine adapted to nearly every soil type. Excellent for hiding ugly structures. Sometimes can do too well & needs to be cut back. Persistent.	This is premier plant to attract hummingbirds. Both Ruby-throat and Black-chinned hummers are highly fond of it. Copious nectar sustains these beauties. The plant is also an excellent nectar source for the larger butterflies.
Clematis pitcheri Purple leatherflower	Ranuncu-laceae - Buttercup Family	Vine Climber, high	Showy, purple nodding urn-shaped flowers June - Aug.	Achenes, filiform. Sept. - Oct.	Part shade, dappled shade, shade	Prefers thickets, woodland borders, likes moist low ground	Sands, loams, clays; likes limestone soils. Mesic, prefers moist soils.	X	X	X	X	X	X	X	X			This high climbing vine with the elegant smooth bright green leaves and lovely purple flowers will clamber over a trellis, trees, or shrubs. This species is fairly cold-hardy. Deciduous.	This vine provides good cover for small birds. A thick clump is an excellent place to hide from predators. Achenes eaten by a few species of birds.
Cocculus carolinus Carolina moonseed	Menesperm-aceae - Moonseed Family	Vine Climber to 15'	Inconspic-uous greenish flowers. July - August	Conspicu-ous brilliant red berries (drupes.) Sept. - Oct.	Full, part shade	Prefers rich moist soils of woods & thickets	Sands, loams & clays. Tolerates gumbo soils of Houston. Well-drained, mesic.	X	X	X	X	X		X				Relatively fast growing, slender twining vine that prefers full some & some kind of support. Leaves are attractively shaped and fruits are highly ornamental. Will grow over shrubs & small trees. Evergreen.	Dense clusters of brilliant red fruit are relished by bluebirds, mockingbirds, cardinals, robins, warblers & sparrows.
Lonicera sempervirens Coral honeysuckle	Caprifoliaceae Honeysuckle Family	Vine Climber to 40'	Showy orange red tubular flowers in clusters. March - Dec.	Berries, red April - Jan.	Full sun, part shade	Prefers moist fertile soils of East Texas, woods & thickets	Sands, loams & clays Mesic-hydric soils; poor drainage O.K.	X	X	X	X	X						A beautiful everblooming vine that grows well & is well-behaved. Likes morning sun & afternoon dappled shade. Needs extra water when getting established, but not later. Persistent.	Ruby-throated and Black-chinned hummers are attracted to this vine spring, summer and fall, esp. during migration. Orioles also sip nectar, as do butterflies. Fruit-eating birds relish the succulent red berries in the fall. LHP of Spring Azure.

Maurandya antirrhiniflora Snapdragon vine	Scrophulari-aceae Figwort Family	Vine Climber to 3'	Showy purple flowers. March - Sept.	Capsule, round Sept. - Dec.	Full sun, part shade	Prefers limestone hills & bluffs, also dunes, shrubs & boulders.	Sands, loams, clays. Mesic, well-drained.	X	X	X	X	X	X	X			X	Elegant, delicate-leafed climber & ground cover. Fast grower; tolerates salt. Looks great in a pot. Leaves have excellent fall color Perennial.	Fruits are a favorite with many species of birds. Flowers are a good nectar source for many kinds of insects, especially butterflies. Lush clumps provide good cover. Larval host plant of Buckeye.
Parthenocissus quinquefolia Virginia creeper	Vitaceae Grape Family	Vine Climber & ground cover	Inconspicuous greenish flowers. May - June	Berries, blue-black. Sept. - Nov.	Full sun, part shade, dappled shade	Prefers rich soils of woodlands & thickets & rocky banks in eastern half of TX.	Sands, loams, clays. Tolerates gumbo soils. Well-drained, mesic.	X	X	X	X	X		X				Very attractive vine with lush green palmate leaves. Vigorous climber well able to cloak walls, columns, etc by fastening on to masonry. Also good ground cover. Striking red-orange fall color. Deciduous.	Many species of birds compete for the blue-black berries including woodpeckers, kingbirds, great-crested flycatchers, titmice, cardinals, mockingbirds, bluebirds, warblers & sparrows.
Passiflora lutea Yellow passionvine	Passifloraceae Passionflower Family	Vine Climber to 3'	Showy whitish-yellow flowers May - Sept.	Fleshy globose fruit. Aug. - Nov	Part shade, dappled shade, shade	Prefers shady, low moist woods	Sands, sandy loams; likes limestone soils. Mesic, likes moist soils.	X	X	X		X	X	X				Delicate looking vine with interestingly shaped leaves and complex flowers. Prefers moist & shady areas. Deciduous.	Flowers attract several kinds of insects, especially butterflies. Birds & small mammals partake of the fruit. Larval host plant of the Julia, Mexican & Gulf fritillaries, as well as Zebra & Crimson-patch longwing.
Andropogon gerardi Big bluestem	Poaceae Grass Family	Grass 3' - 6'	Flowering spikelets of green to golden-tan in form of turkey foot. Aug. - Nov.	Seeds Sets seed shortly after flowering.	Full sun	Prefers moist soils of meadows & prairies in the eastern 1/2 of state	Sands, loams & clays, acid or calcareous. Mesic; moderate moisture.	X	X	X	X	X	X	X	X	X	X	This big prairie perennial can be used as a meadow grass with wildflowers, a pocket tallgrass prairie or a garden accent. Adds a dramatic component. Needs rich, deep soil with moisture present. Good erosion control. Best placed at bottom of slope.	Provides good cover & food for many species of wildlife. Grass parts used as nesting & denning material. Larval host plant of Delaware Skipper, Dusted Skipper, Bunchgrass Skipper, Large Wood Nymph, Cobweb, Clouded & Beard grass skippers.
Bothriochloa barbinodes Cane bluestem	Poaceae Grass Family	Grass 3' - 6'	Flowering spikelets from whitish green to silver. April - Aug.	Seeds May - Oct.	Full sun, a little shade O.K.	Prefers looser soils in the western 2/3rds of the state. Grows in open areas & grasslands.	Sands, sandy loams, loams; likes limy soils. Well-drained, xeric		X			X	X	X	X	X	X	Very attractive accent plant or member of a pocket prairie or field of wildflowers. Perennial bunch grass.	Cane bluestem is an excellent forage grass for wildlife. Leaves are grazed, especially later on in the season. Grass parts used as nesting & denning material. Seeds eaten by granivorous birds & small mammals.
Bouteloua curtipendula Sideoats grama	Poaceae Grass Family	Grass 2' - 6'	Spikelets, yellowish, arranged down along stem May - Oct.	Seeds June - Nov.	Full sun, part shade, dappled shade	Tolerates a variety of open places throughout state. Does well in disturbed areas. Not as common in eastern forests.	Sands, loams & clays, both limestone & igneous soils. Well-drained, mesic-xeric.	X	X	X	X	X	X	X	X	X	X	Our state grass is a strong perennial and works well as a garden accent. Competes well with short grasses but not tall-grass prairie grasses. Great choice for wildflower meadow garden. Warm-season perennial bunch grass. Dormant in winter.	Provides good grazing for wildlife and an abundance of bird seed for seed-eating birds of several varieties. Food available spring, summer & fall. Grass parts used as nesting & denning material. Larval host plant for Dotted skipper & green skipper.

Buchloe dactyloides Buffalograss	Poaceae Grass Family	Grass 3 -12	Flowering spikelets yellowish green. June - Nov. or whenever not dormant.	Seeds. Sets seed shortly after flowering.	Full sun	Prefers open areas in many kinds of soils, short-grass prairies of Central & North Central Texas	Sands, loams & clays. Xeric, well-drained.		X	X	X	X	X	X	X	X	X	This is a wonderful turf grass. It takes a little longer to establish in caliche soils. Once established, it is very drought tolerant. It turns a soft golden brown when it goes dormant. Perennial - Turf grass.	Buffalograss provides fine nesting & denning materials, especially for lining bird's nests. Seeds of male flowers are eaten by small granivorous birds. Is the larval host plant of the Green skipper.
Elymus canadensis Canada wildrye	Poaceae Grass Family	Grass 3' - 5'	Flowering spikelets green turning gold, with long awns. March - June	Seeds May - Sept.	Full sun, part shade, dappled shade	Prefers shaded sites along fence rows, woods borders & moist ravines throughout state. Absent in southern part of South TX.	Sands, loams & clays. Well-drained, mesic. Moderate moisture.	X	X	X	X	X	X	X	X	X	X	This tufted grass with attractive seed heads does best in shady areas with adequate moisture. Cool-season tufted perennial.	Provides good early food for many species of birds & small mammals that eat grain. Grass parts, leaves, stems, & spikelets used as nesting & denning material. Larval host plant for Zabulon skipper.
Muhlenbergia lindheimeri Big muhly	Poaceae Grass Family	Grass 2' - 5'	Flowering spikelets silvery green to golden tan. July - Aug.	Seeds Sept. - Nov.	Full sun, part shade	Prefers limestone uplands near streams	Calcareous clays & limestone soils. Well-drained, mesic.				X	X	X	X				This is a highly attractive bunch grass. Serves as a striking accent plant in any garden. Plant sports silvery golden plumes in the fall. Warm-season perennial.	Big muhly is a good forage grass for wildlife. Birds readily eat the ripe seeds. Grass parts are used for nesting & denning material.
Panicum virgatum Switchgrass	Poaceae Grass Family	Grass 3' - 6'	Flowering spikelets green turning rich gold. Aug. - Sept.	Seeds Oct. Nov.	Full sun, part shade	Prefers seasonally moist, open areas throughout Texas.	Sands, loams & clays Moist. Seasonal poor drainage O.K.	X	X	X	X	X	X	X	X	X	X	Gorgeous tall-grass can be used as dramatic accent plant. Turns deep, rich golden color in fall. Has airy, filigreed seedhead. Can also be used in small pocket prairie. Does great in Houston, loves the extra water. Warm-season perennial bunch grass.	Provides fair grazing for wildlife, seeds sought after by seed-eating birds. Excellent sparrow food in winter. Provides good protective cover and nesting & denning material. Good place for butterflies to get out of the wind. LHP for Delaware skipper.
Sorghastrum nutans Indiangrass	Poaceae Grass Family	Grass 3' - 8'	Flowering spikelets a deep yellow. Oct. - Nov.	Seeds Nov. - Dec.	Full sun, some shade O.K.	Prefers moist rich soils of tall-grass prairies of central & coastal TX	Sands, loams & clays. Likes calcareous soils. Mesic, likes moisture		X	X	X	X		X				This gorgeous grass was major component of tallgrass prairie. Striking accent plant or member of pocket tallgrass prairie. Does well in a naturally moist rich swale area. Warm-season perennial bunch grass. Dormant in winter.	Fairly good grazing for wildlife when green. Seed-eating birds and small mammals eat ripe seeds. Stems, leaves used as nesting & denning material. Provides excellent protective cover for wildlife. Larval host plant of Pepper-and-salt skipper.

Schizachyrium scoparium Little bluestem	Poaceae Grass Family	Grass 2' - 5'	Flowering spikelets bluegreen to silvery gold. Aug. - Dec.	Seeds Sept. - Dec.	Full sun, part shade	Prefers woods openings, rocky slopes of pastures & rangeland, along forest borders and prairies throughout Texas.	Sands, loams & clays. Well-drained, mesic.	X	X	X	X	X	X	X	X	X	X	Most wide-ranging bunchgrass in the state, a dominant of the tallgrass prairie. Tolerant of a wide variety of moisture & drought. Little bluestem is a symphony of beautiful color changes through the year from blue-green to coppery gold in the fall.	Provides fairly good grazing for wildlife. Good cover grass, grass parts provide denning & nesting material for birds & mammals. Larval host plant for Dusted skipper, Delaware skipper, Dixie skipper, Cross-line skipper & Cobweb skipper.
Tripsacum dactyloides Eastern gammagrass	Poaceae Grass Family	Grass 3' - 8'	Flowering spikelets yellow & cornlike. July - Sept.	Seeds April - Nov.	Full sun, part shade, dappled shade	Prefers low moist grassland sites in eastern portion of state.	Sands, loams & clays Mesic, likes extra moisture. Seasonal poor drainage O.K.	X	X	X	X	X		X				Forms very dense clump useful for buffer or areas of separation. Likes more shade & moisture than most grasses. Also dramatic accent plant. Can be grown in pure stands as pasture grass. Warm-season perennial bunch grass.	Good protective cover for small birds & mammals. Grass parts provide nesting & denning material. Provides very good forage for wildlife. Larval host plant to the Bunchgrass skipper.
Aster ericoides Heath aster	Asteraceae Sunflower Family	Wildflower 4" - 30"	Showy pale bluish-white flowers. Oct. - Nov.	Achenes Nov. - Dec.	Full sun, part shade	Prefers open situations throughout much of north central & southeast Texas, including the Plains country & parts of East, South & West Texas	Sands, loams & clays. Well-drained, mesic.	X	X	X	X	X	X	X	X	X	X	This profusely blooming fall aster grows into a much-branched erect or reclining or arching plant. The numerous flowers provide an extravagant fall show. Narrowly lanceolate leaves are attractively elegant. Perennial.	Heath aster provides abundant fall nectar for bees, butterflies & other insects foraging in the late fall. Many seed-eating birds dine on the ripe achenes. Its shrubby aspect provides good cover for small sparrows & finches. LHP of Pearly crescentspot.
Erythrina herbacea Coralbean	Leguminosae Legume Family	Wildflower (Shrub in South TX) 6' - 15'	Showy coral red tubular flowers. May - Dec.	Pods with poisonous red seeds Oct. to Dec.	Full sun, part shade	Prefers sandy woods on coastal plain, but will grow elsewhere.	sands, loams & clays. Well-drained, mesic.		X	X	X	X						Striking shrubby wildflower dies back in winter like a perennial in all areas but south Texas. Flamboyant summer flowers are highly ornamental. Seeds are also attractive, though extremely poisonous. Perennial.	Elegant tubular flowers have copious nectar & are highly attractive to the Ruby-throated hummingbird. Seeds, though highly appealing visually, are poisonous and not eaten by wildlife.
Englemannia pinnatifida Engelmann daisy	Asteraceae Sunflower Family	Wildflower 1' - 3'	Showy yellow daisy-like flowers. Feb. - Nov.	Achenes April - Dec.	Full sun, part shade, dappled shade	Grows in opens fields, meadows, along roadsides throughout much of the state.	Sands, loams & clays; neutral to calcareous soils. Well-drained, xeric to mesic.	X	X	X	X	X	X	X	X	X	X	Lemon-yellow flowers blanket the fields & roadsides especially in the spring. With a little extra water in your garden, these flowers will prolong bloom-time through the summer. Perennial.	Englemann daisy attracts a multitude of bees, butterflies & other insects which forage on the nectar. Seed-eating birds such as sparrows, buntings & finches dine on the ripe achenes in the fall.

Eupatorium serotinum Late boneset	Asteraceae - Sunflower Family	Wildflower 2' - 5'	Showy off-white flower heads. Sept. - Nov.	Achenes Nov. - Jan.	Full sun, part shade	Prefers open places, woodland edges, near ponds.	Sands, loams & clays.H67 Mesic, likes moisture.	X	X	X	X	X						This late blooming shrubby wildflower with opposite leaves and much-branched, flat-topped terminal flower clusters, often forms colonies. Perennial.	Masses of off-white flowers is an excellent nectar source for migrating monarch butterflies & other late foraging insects. Plants provide good protection for butterflies on windy days. Many species of sparrows &finches eat the ripe achenes in winter.
Helianthus maximiliani Maximilian sunflower	Asteraceae Sunflower Family	Wildflower 4' - 6'	Showy bright yellow flowers Aug. - Oct.	Achenes Nov. - Dec.	Full sun, part shade	Prefers seasonally moist ditches & depressions in grasslands, prairies & meadows in Edwards Plateau, North & South East Texas.	Sands, loams, clays & limestone-based soils. Well-drained, xeric; tolerates seasonally poor drainage.			X	X	X	X	X	X		X	With its bright yellow flowers, Maximilian sunflower is gorgeous in the fall. Does very well growing among native grasses in a pocket prairie. Occurs in colonies on both dry & moist ground. Perennial.	Maximilian sunflower provides copious nectar to butterflies & bees in the fall. RIpe seeds eaten by granivorous birds, especially sparrows.
Ipomopsis rubra Standing cypress	Polemoniaceae Phlox Family	Wildflower 2' - 6'	Showy red-orange tubular flowers. May - June	Seeds elongate, swelling when wet. July - Aug.	Full sun, part shade, dappled shade	Prefers rocky or sandy ground in fields or along edges of woods in Edwards Plateau, Cross Timbers, Oak Woods & Prairies & East Texas. Also Piney Woods	Sands, loams & gravelly soils. Well-drained, mesic	X		X	X	X	X		X			With splashy red-orange flowers & elegantly divided threadlike leaves, standing cypress is a spectacular plant. It does not flower the first year seeds are planted but forms a low attractive basal rosette. Biennial.	Standing cypress is a wonderful hummingbird plant. Exerted yellow anthers & red tubular flowers attract any hummer in the area. Hummer's heads get yellow with pollen as they zip from flower to flower.
Lobelia cardinalis Cardinal flower	Campanulaceae Campanula Family	Wildflower 1' - 4"	Showy red tubular flowers, fragrant. May - Oct.	Capsules with seeds. June - Nov.	Full sun, part shade, dappled shade	Prefers moist soils in open places along streams, meadows & along roadsides; also about ponds & springs, & near swamps where the shade is not too dense.	Sands, loams, clays & limestone based soils. Moist soils, poor drainage O.K.	X	X	X	X	X	X	X	X	X	X	Cardinal flower cannot be equalled for sheer visual impact, planted in dense stands in a shady part of the garden. In peak bloom they create an incredible spectacle. Bright scarlet flowers are clustered on racemes as long as 18. Perennial.	Cardinal flower is a premiere hummingbird plant and will not fail to draw in any Ruby-throats passing through your area.
Malvaviscus drummondii Turk's cap	Malvaceae - Mallow Family	Wildflower shrub in South TX. 4' - 9'	Showy red flowers. May - Nov.	Berry-like fruit, red, flattened. Aug. - Sept.	Part shade, dappled shade, shade	Prefers moist woodlands, wood margins, streamsides, river edges in shady conditions. Low grounds.	Sands, loams & clays. Likes limestone soils, tolerates gumbo. Hydric-mesic, likes moisture.	X	X	X	X	X	X	X				A good ornamental for shady situations. Forms colonies in shady spots. Serves as good ground cover. Best pruned back after 2 years. Perennial.	Attractive red flowers are very popular with hummingbirds. Butterflies, diurnal moths & other insects are also attracted to the flowers. The bland fruit is eaten by several species of birds & small mammals.

Penstemon cobaea Giant foxglove	Scrophulari-aceae Figwort Family	Wildflower 1' - 2 1/2'	Showy large tubular pale violet flowers with nectar guides. April - May	Capsules with seeds. June - July	Full sun, part shade	Prefers open areas, meadows, prairies, pastures & roadside areas	Sands, loams, clays & limestone outcrops. Well-drained, mesic.		X	X	X			X	X	X		Giant foxglove is, as its name implies, our largest-flowered penstemon. In full boom, gorgeous flowers open, covering 2/3rds of the flower stalk. This is a beautiful choice for a wildflower meadow or pocket prairie. It loves limestone soils. Perennial	Giant foxglove is highly attractive to bees, especially the larger varieties such as bumblebees and carpenter bees who eagerly forage for the nectar & the pollen. Larval host plant of the Dotted checkerspot.
Salvia coccinea Scarlet sage	Lamiaceae - Mint Family	Wildflower 2' - 4'	Showy red tubular flowers. May - Dec.	Calyx with nutlets. June - Dec.	Full sun, part shade, dappled shade	Prefers sandy soils in thickets, chaparral, on edges of open woods from East to South Texas.	Sands, loams, clays & caliche-type soils. Mesic, seasonal poor drainage O.K.	X	X	X	X	X	X	X				Scarlet sage can thrive in any part of the state. It is not very cold-hardy, however. Oddly, it looks better if planted in dry, shady areas with poor soil. In rich soils with lots of water it gets very tall, coarse & slightly unattractive. Perennial.	Scarlet sage is another excellent hummingbird plant & will draw in the hummingbirds of your area, including any migrants passing through in spring & fall. Bees & other insects are also attracted to the nectar, despite the red flower color.
Viguiera dentata Golden-eye	Asteraceae Sunflower Family	Wildflower 3' - 6'	Showy yellow daisy-like flowers. Oct.	Achenes Nov.	Full sun, part shade	Prefers dry caliche soils of the Texas Hill Country & chalky cuestas of North Central Texas, Blackland Prairies & to a less extent in the Trans-Pecos.	Sands, loams, clays & limestone soils. Well-drained mesic.				X	X		X			X	This open busy perennial thrives at sunny edges of woods & tends to grow in large colonies. Extremely drought-tolerant, it can be absolutely magnificent in full bloom. Perennial.	Golden-eye provides a great deal of nectar to bees & butterflies foraging in the fall. Ripe achenes are relished by several species of small seed-eating birds. Also provides good protective cover. Larval host plant of the Bordered patch butterfly.
Castilleja indivisa Indian paintbrush	Scrophulari-aceae Figwort Family	Wildflower 6 - 12	Showy orange to red bracts. March - May	Capsules with seeds. May - July	Full sun, a little shade O.K.	Prefers fields, meadows, prairies & roadside areas in Eastern portion of the state including the Coastal plains	Sands, loams & clays. Mesic, well-drained.	X	X	X	X	X	X	X				Indian paintbrush is an excellent choice for a pocket prairie or meadow garden. Grows very well when planted with native grasses. Looks great when interspersed among masses of bluebonnets & showy evening primrose. Annual.	Insects of several varieties are attracted to the small flowers. Hummingbirds will also feed from them, attracted to the red-orange bracts that surround them. Larval host plant of the Buckeye.
Coreopsis tinctoria Golden wave	Asteraceae Sunflower Family	Wildflower 1' - 4'	Showy yellow daisy-like flowers with brown centers March - June or later depending on rains.	Achenes May - Aug.	Full sun, part shade	Prefers seasonally moist soils in the eastern portion of the state, but grows throughout.	Sands, loams, clays; either calcareous or acid. Mesic, seasonal poor drainage O.K.	X	X	X	X	X	X	X				Great profusions of this golden yellow flower blanket roadsides & meadows, like undulating waves of a golden ocean. Annual.	Golden wave attracts a wide variety of insects, especially bees & butterflies who sip nectar from the disk flowers. Ripe achenes are sought after by many species of seed-eating birds, especially the Painted Bunting.

Eustoma grandiflora Texas bluebells	Gentianaceae - Gentian Family	Wildflower 1' - 2'	Showy blue-purple flowers June - Oct.	Capsule with seeds. Aug. - Nov.	Full sun, part shade	Prefers damp prairies, pond edges, open fields & banks along streams throughout much of Texas	Sands, loams & clays Mesic, seasonal poor drainage O.K.	X	X	X	X	X	X	X	X			Texas Bluebell, otherwise known as Bluebell Gentian is a showy wildflower that responds favorably to good soils, extra water & a little fertilizer. Leaves are pale greenish blue & very attractive also. Annual.	Texas bluebell is very attractive to several kinds of insects, especially bees & butterflies.
Lupinus texensis Texas bluebonnet	Leguminosae Legume Family	Wildflower 8 - 16	Showy blue and white pea-like flowers in racemes, fragrant. March - May	Legume May - July	Full sun, a little shade O.K.	Prefers open fields, meadows & prairies, also roadside areas throughout much of the state from Corpus Christi to Abilene.	Sands, loams, clays & limestone soils; really likes calcareous soils. Well-drained, mesic to xeric.	X	X	X	X	X	X	X	X			Our state flower, this Texas endemic cloaks meadows, prairies & roadsides come spring in an ocean of blue. An incredible sight that dazzles all newcomers to the state. Bluebonnets take a little work to get established and depend on the fall rains.	Bluebonnets are attended by bees & other insects who forage on the nectar & pollinate the plants. Plants let the bees know a particular flower has been pollinated by turning from white to dark red at the center of the banner. LHP of hairstreaks & elfins.
Rudbeckia hirta Brown-eyed Susan	Asteraceae Sunflower Family	Wildflower 1' - 2'	Showy yellow ray flowers with dark brown centers May - Sept.	Achenes July - Nov.	Full sun, part shade, dappled shade	Prefers open prairies, grasslands & woodland meadows in the eastern two-thirds of the state.	Sands, loams & clays. Well-drained, mesic.	X	X	X	X	X	X	X	X			Black-eyed Susans provide a lush splash of color in your meadow garden or pocket prairie. It does especially well if the rains are good or with a little extra watering. It will grow well in both partially shady areas & the sun. Annual.	Bees, butterflies & many other kinds of insects forage for nectar from these flowers all summer. In the fall when the flowers have good to seed, numerous seed-eating birds forage on the ripe achenes.
Verbena bipinnatifida Prairie verbena	Verbenaceae Vervain Family	Wildflower 6 - 12	Showy magenta to purple flowers grouped in 2-flower heads. March - Dec.	Capsule-like fruit, dry (Schizo-carp) May - Dec.	Full sun, some shade O.K.	Prefers prairies & fields throughout most of Texas, except for Trans-Pecos	Sands, loams, clays & limestone-based soils. Well-drained, xeric to mesic.	X	X	X	X	X	X	X	X	X		Prairie verbena makes a great low-growing ground cover. Looks very good in rock gardens. Prefers full sun & limestone soils but will survive in others. Annual.	Prairie vervain is an excellent butterfly plant. When in bloom it is always attended by them as they daintily park on the conveniently shaped landing-platform-shaped flower heads.

APPENDIX X

Learn About Whitetails

by Robert L. Cook
Updated and revised by Horace G. Gore, 1989

From *Texas Parks and Wildlife* Magazine
October 1975

Exploration and settlement of the American frontier would have been extremely difficult without the white-tailed deer. Early colonists and explorers utilized the meat and skins of these animals extensively, and deer hides later served as a medium of exchange between trappers, frontier scouts, Indians and traders.

Deer were even more important to the American Indians prior to settlement of the nation, providing clothing and food. Deer were also an important factor in the folklore and religion of native tribesmen.

Indiscriminate slaughter by commercial meat and hide hunters and ignorance of the deer's habitat requirements almost caused its extermination near the end of the 19th century. It was reported, for example, that an early Texas trader operating in Indian country at Trading House Creek (near present site of Waco) shipped approximately 75,000 deer skins from 1844 through 1853.

Public concern for survival of the species brought about a series of protective measures by the Texas Legislature near the turn of the century. A five-month closed season during

which deer could not be hunted was enacted in 1881. The bag limit was established at six bucks per season in 1903 and was reduced to three bucks per season in 1907.

The first hunting licenses were sold in Texas in 1909. In 1919, six game wardens were hired to patrol the entire state.

Additional interest and protection by landowners, sportsmen and law enforcement personnel helped deer populations increase steadily during the 1930s and 1940s. Statewide trapping and restocking programs established deer herds in previously uninhabited areas. Sales of hunting licenses increased dramatically—382,249 in 1955, 571,058 in 1964 and over one million in 1972.

The white-tailed deer is now the most numerous big game animal in Texas and in the United States. Aesthetically and emotionally, the whitetail holds a place of distinction in the hearts and minds of many Texans.

Research and management projects concerning the whitetail and its habitat requirements are conducted by wildlife biologists of the Texas Parks and Wildlife Department, federal agencies, many universities and several private research establishments in Texas.

Research activities by the wildlife biologists of the Texas Parks and Wildlife Department are 75 percent funded from federal excise taxes on firearms and ammunition. Deer are of primary importance on several of the 119 wildlife management areas (900,000 acres) operated by this department. Research activities also are conducted on National Wildlife Refuges, National Forests and Department of Defense lands. The Texas Parks and Wildlife Department game warden field force now numbers some 460 officers. These highly skilled and trained officers provide law enforcement services essential to continued survival of the whitetail.

The whitetail is one of the most researched, observed, sought after, cussed and discussed of all wildlife species in Texas. Few of us, however, are aware of the basic principles which rule this majestic animal's life. Following are some of the most frequently asked questions about white-tailed deer in Texas.

How many kinds of deer are there in Texas?

The Texas white-tailed deer, *Odocoileus virginianus texana*, occurs almost statewide. There were several subspecies of whitetail in the state years ago. However, due to expanding-overlapping ranges and restocking efforts in recent times, the subtle differences between subspecies have been lost except for the isolated population of Carmen Mountain white-tailed deer, *Odocoileus virginianus carminus*, in the Big Bend National Park area. Although found almost statewide in brushy or wooded areas, the heaviest deer populations are located in the central one-third of the state. The mule deer, *Odocoileus hemionus*, is a different species which occurs primarily west of the Pecos River and in parts of the High Plains of the Texas Panhandle.

How many deer are there in Texas?

Texas has more white-tailed deer than any other state. Population estimates in recent years range from three to four million. Current census data indicate that there are more than four million whitetails in Texas. Population estimates vary from year to year, depending upon reproduction, survival and losses due to malnutrition and disease.

How many white-tailed deer are legally harvested by sportsmen in Texas each year?

An estimated 500,000 whitetails are harvested by sportsmen in Texas annually—more than any other state.

Isn't that too many?

No. Current harvest rates account for only about ten percent of the herd annually. Research indicates that about 20 percent of most populations should be removed annually by sportsmen. Biologically sound harvest rates and habitat management programs are necessary in Texas to prevent waste due to overpopulation, to achieve maximum utilization of this valuable natural resource and to insure the whitetail's continued survival. For example, since the initiation of the program in 1953, more than two million antlerless or doe deer have been harvested from the established deer herds in the state.

How are deer counted?

Several methods of estimating deer numbers are used in Texas:

1. The walking deer cruise line. During the fall months, wildlife biologists walk census lines which have been placed in representative deer habitat and count the deer observed. This method is used extensively in Texas, and there are several hundred such deer census lines in the state.

2. Counts from fixed-winged aircraft. This method is used in areas of the South Texas brush country. Observers count deer seen on strips of deer habitat of known width and length.

3. Track count method. Counting deer tracks on selected sites during late summer is a method frequently used in heavily wooded areas of East Texas.

4. Spotlight counts. Counting deer at night with the use of spotlights along pasture roads or lightly traveled public roads is a method biologists have recently put into use. It is an excellent census method in areas with low deer populations. **Caution:** Biologists always notify all landowners along their spotlight census routes. They drive vehicles clearly marked "Texas Parks and Wildlife Department" and "Deer Census." Any other spotlighters should be reported to the local game warden.

5. Several other deer census methods are used by Parks and Wildlife Department personnel. Counts from helicopters and late evening counts from vehicles are good deer census techniques.

What do deer eat?

Deer eat mostly browse (leaves, twigs, young shoots of woody plants and vines) and forbs (weeds and other broad-leafed flowering plants). They eat some grass, but only when

Each summer the whitetail grows a new set of antlers. When the breeding season begins, the velvet (above) is shed and the antlers become hard and polished.

it is green and succulent. Sheep, goats and foreign big game species compete directly with the whitetail for preferred deer foods. Deer food shortages usually occur during late summer and winter months. Adequate forage is usually available during spring and fall seasons. A variety of foods and habitat types is essential to good deer production and survival.

The following plants are examples of some good native deer foods in Texas which are readily taken by deer when and where they are available.

Browse: oak leaves and acorns, yaupon, greenbriar, prickly pear and fruit, hackberry, mulberry, rattan or supplejack, sumac, mesquite beans and dried leaves, hawthorns, poison oak, American beautyberry, wild cherry and plum, wild grape, honeysuckle, dogwood, elm, blackberry and dewberry, gum elastic (chittum), acacias (catclaw), ephedra, walnut, guayacan, wild chinaberry, kidneywood, Brasil and other condalias.

Grasses: rescue grass, Texas wintergrass, Ozarkgrass, fall witchgrass, panic grasses, sedges and rushes.

Forbs: bundle flower, euphorbia(s), whorled nodviolet, bayflower, oxalis, wooleywhite, tickclovers, filaree, clover, verbena, arrowleaf sida, wild lettuce, wild onions, old man's beard, wildbean, snoutbean, lespedezas, spiderwort, vetches (milkvetch, etc.) lamb's quarters, plantain, groundcherry, pigweed or carelessweed and partridge peas.

How long do deer live?

Deer in controlled situations have been known to live 15 to 20 years. It is unusual, however, for a deer in the wild to live more than 10 years, because its teeth usually wear out during the eighth or ninth year.

How can the age of a deer be determined? Is the number of antler points one method?

Deer age is determined by tooth replacement and tooth wear of the premolars and molars (back teeth) of the lower jaw. Unlike sheep, deer cannot be aged by their front teeth, and age cannot be determined by antler characteristics.

Does a buck deer keep the same set of antlers each year?

No. A buck grows a new set of antlers (not horns) each summer. The size of the antlers depends primarily upon the quality and quantity of food the buck eats and his age. The more nutritious the food and the more there is of it during the antler-growing season, the better his antlers will be. With favorable conditions, antler size and spread will increase with deer age. After the sixth year, however, antlers usually decline in size due to the deer's inability to properly chew and digest food.

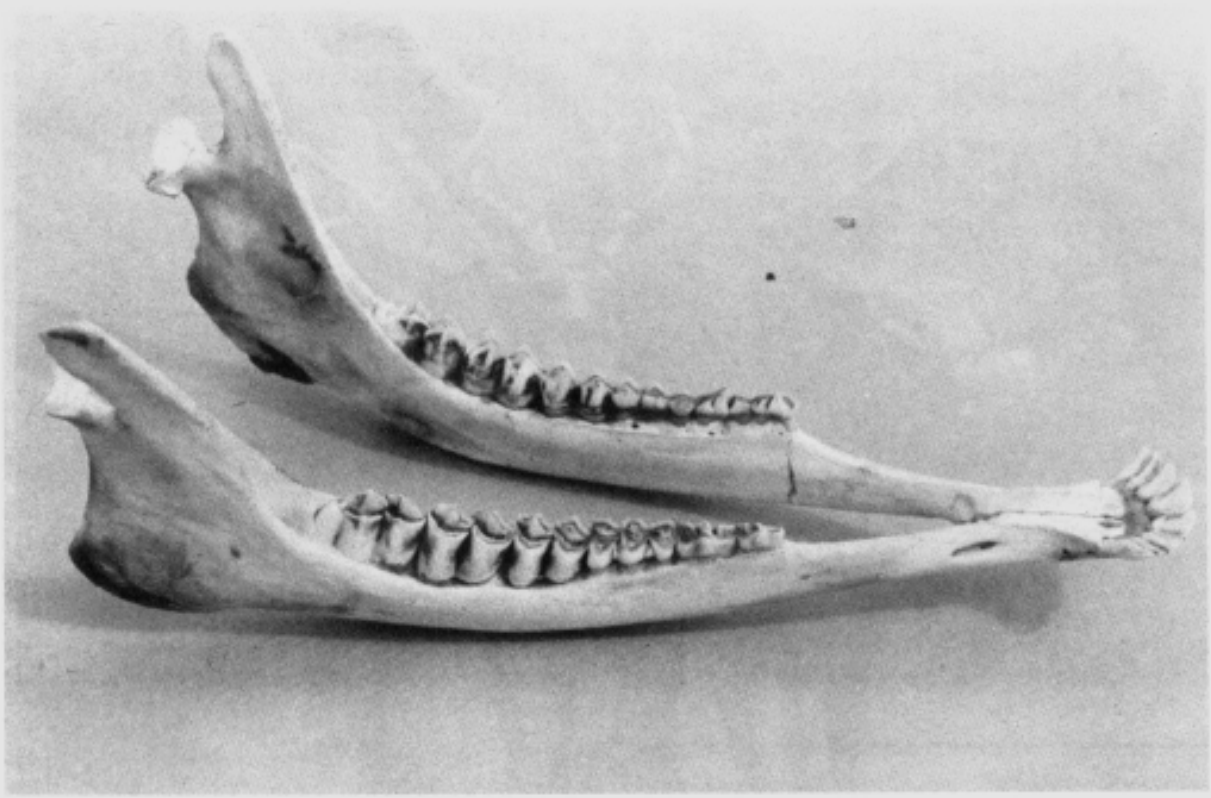

By noting tooth replacement and tooth wear of the premolars and molars of the lower jaw, biologists determined that this deer was 1½ years old.

What happens to the antlers each year?

Buck deer shed their antlers following the mating season each year. Antler shedding is triggered by the cessation of production of a hormone which also terminates the breeding season. Most bucks in Texas shed their antlers during late January and February. Shed antlers quickly deteriorate or are eaten by rodents and other animals for their calcium content. New antlers start growing and become noticeable "in velvet" during May and June. Good nutrition during this period is critical for good antler growth.

Shouldn't spike bucks be protected since they are young and will be the breeding bucks of the future?

Not necessarily. Most spike bucks are young deer, but if range conditions are poor, there may be spikes of any age. If a herd contains many spikes, the deer probably did not have sufficient quality forage during antler-growing season (May-August). It would serve no logical purpose to protect the spike buck. Research conducted on the Kerr Wildlife Area has shown that all young spike bucks do not develop into the same quality of buck as do most yearling bucks with forked antlers. Some young spikes will produce very good antlers later in life, but the chances for massive antlers is not as good as with forked antlered yearlings. Spikes should be harvested based on the intensity of management desired by each landowner or group of hunters. Spikes should never by protected from hunting. The idea that the removal of spikes is a cure-all for antler development has little merit.

When is the breeding season?

The breeding season for white-tailed deer in Texas ranges through the fall and winter months from about the first of September through mid-January. The peak breeding activity occurs in mid-November in Central Texas and late December in South Texas.

What is a good buck-doe ratio?

The buck-doe ratio in most of Texas is about one buck per three to five does (adult deer) which is satisfactory for good production and hunting. This ratio is not a major problem in Texas deer herd management at this time. An adequate harvest of antlerless deer would help maintain a good ratio of both sexes. It is recommended that game managers and landowners strive for a ratio of 2.5 does per buck.

Won't the deer become smaller due to inbreeding if we don't bring some new blood lines?

No. The deer of Texas are direct descendants of isolated deer herds of many years ago. Inbreeding may occur in the wild, but it apparently is no problem. New blood lines are quickly absorbed into established genetic pools and no improvement in quality is noticed. Inferior quality or small deer result from poor range conditions or insufficient preferred forage and will not be improved by bringing in new bucks.

Does the Texas Parks and Wildlife Department restock deer?

Yes, but only in approved areas judged as potentially good deer habitat which presently have few or no deer. The deer trapping and restocking program was initiated in 1938 by the Game, Fish and Oyster Commission, predecessor of the Texas Parks and Wildlife Department. Since that time, more than 30,000 deer have been released in 160 Texas counties.

How many fawns will a doe have?

Normally, a doe deer in Texas will have her first fawn, which is usually a single, when she is two years old. Thereafter, if food conditions are adequate, the doe should normally have twin fawns almost every year until her sixth or seventh year, when the reproductive rate will begin to decline. Triplet fawns are uncommon, but do occur. Quadruplets have been reported.

The gestation period for deer is seven months.

According to reproductive studies, "old barren does," or does that have never produced fawns, are uncommon and are no problem to deer herd management. The key to maximum production is an adequate supply of nutritious natural food.

Are more female fawns born than male fawns.?

No. Male and female fawns are born in approximately equal numbers.

What are the most serious threats to deer herds in Texas?

1. Habitat destruction such as land clearing, root plowing, improved grass pastures, subdivisions, new lakes, expanding cities, etc.
2. Poor range or inadequate food supplies due to overgrazing by domestic livestock and overpopulations of deer, resulting in large-scale deer die-offs.
3. Disease and parasites.
4. Illegal hunting.

What are some of the most important limiting factors affecting white-tailed deer?

Rainfall is an important limiting factor. Extended periods of severe drought during the late summer and fall are especially harmful to fawns, yearlings and very old deer. Coyotes are a limiting factor in South Texas and in portions of Southeast-Central Texas. However, natural predators, such as coyotes, bobcats or eagles presently pose no serious threats to established deer herds of Texas. Efforts to control these predators are usually expensive and ineffective with regard to white-tailed deer.

What about hunting?

Legal hunting can be a limiting factor but is not currently a threat to deer populations. In fact, regulated hunting is the best way to crop the deer herd annually, much like a farmer-rancher would crop his herds of domestic livestock. Properly controlled and regulated, hunting is the most reasonable and humane method of maintaining and utilizing the extensive deer populations of Texas.

Will deer move great distances?

Not normally. A deer chased by dogs may run several miles, but will often circle and end up close to home. During the breeding season, some bucks will trail female deer out of their normal home range but will later return. Movement studies and radio-tracking research in Texas indicated that most deer spend their lives within about 1.5 miles of their birthplace.

What can I do to help the deer, increase deer numbers or improve the quality of deer?

1. Learn about the habitat requirements of deer. Become familiar with preferred deer foods in your area or the area where you vacation or hunt. Support practices which create good wildlife habitat and prevent destruction of existing habitat.
2. Landowners and operators should make every effort to provide adequate habitat and forage for deer and other wildlife. Competition by domestic sheep and goats should be reduced in some cases. Both sexes of deer should be reasonably, but adequately, harvested each year from well-established herds.
3. Sportsmen should obey state laws and those rules established by landowners. Sportsmen should not abuse the land on which they hunt, trespass where they do not have permission, take "sound shots" or misuse a firearm.
4. Everyone should cooperate with law enforcement officers responsible for protection of our wildlife. Violations should be reported immediately to the nearest game warden of the Parks and Wildlife Department, or to Operation Game Thief at 1-800-792-GAME.
5. Landowners and hunters can provide a significant service to the game management programs of Texas by completely and accurately providing harvest data. Whether it is solicited by mail questionnaire or in person by biologists in the field, at check stations or cold storage facilities, valid harvest information is vital to the formulation of effective hunting regulations. These regulations will allow the maximum harvest of surplus animals without endangering the broodstock necessary to replenish those populations.

Would it help to feed the deer some supplemental feed?

If deer take large quantities of supplemental feed (corn, etc.), there probably is a shortage of their natural preferred foods. The best solution to the problem is to improve availability of natural foods. Obviously, ths cannot be achieved quickly and will result only from proper range management practices (grazing moderately, rotation grazing systems, etc.). If artificial feeding is necessary, deer should be supplied high-quality (14 to 16 percent protein) 3/16" pellets instead of corn, which is about eight percent protein. Marked improvement in body size and antler development should not be expected from artificial or supplemental feeding.

Researchers in Texas and other states have worked many years to obtain answers to some of the many questions concerning the white-tailed deer, its requirements and management. Continued research will reveal additional necessary information about this and other wildlife species. The well-being and continued survival of the whitetail in Texas, however, is dependent primarily upon the interest and concern of sportsmen, landowners and the conservation-minded public of our state.

How To Age Deer

GENERAL ANATOMY OF LOWER MOLAR

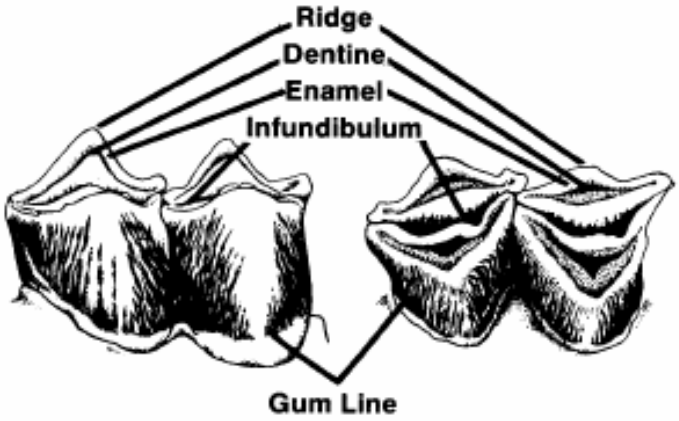

SIDE VIEW **THREE-QUARTERS TOP VIEW**

Age of a deer is determined by tooth replacement and wear on molars and premolars of the lower jaw. As a deer grows older, certain portions of its teeth are worn enough to show definite differences from the teeth of other age classes.

A deer has only six jaw teeth, although they appear to have many more. The teeth are broken into two distinct categories: the premolars, which are numbered 1, 2, and 3, and the molars, which are numbered 4, 5, and 6.

Deer are aged in fractions because they are born around July and are killed during the hunting season.

1½ year old: (*long yearling*): The long yearling deer is the most easily recognized of all age classes. The first three jaw teeth are milk teeth, which will be replaced around two years of age. These are worn smooth as a long yearling, while the last three teeth remain sharp. The number 3 tooth has three cusps in the milk tooth stage, but only two cusps appear on the replaced tooth. Fawns in their first season will show little evidence of wear on their milk teeth.

2½ year old: The first three jaw teeth have been replaced by permanent teeth and all molars are sharp. The dentine of the first molar (tooth 4) is not as wide as the enamel which surrounds it.

3½ year old: The dentine in the first molar (tooth 4) is now as wide or wider than the enamel which surrounds it, and this is not true of the second molar or tooth 5.

4½ year old: The dentine of the first and second molars (teeth 4 and 5) is as wide or wider on both teeth, but not in tooth 6.

5½ year old: The dentine of all molars (teeth 4, 5, and 6) is now as wide or wider than the enamel surrounding it.

6½ year old: The first molar (tooth 4) is worn smooth, but teeth 5 and 6 are not smooth.

7½ year old: The first and second molars (teeth 4 and 5) are worn smooth, or tooth 5 may still have a small ridge left.

8½ year old: All molar teeth are worn smooth (teeth 4, 5, and 6), but tooth 6 may still have a small ridge left.

Older than 8½ year old: Unable to determine, because characteristic formations have all been worn smooth.

The primary factor governing antler formation is food supply. As deer grow older and their teeth wear flatter, food becomes harder and harder to chew. Body condition will drop and, simultaneously, so will antler development.

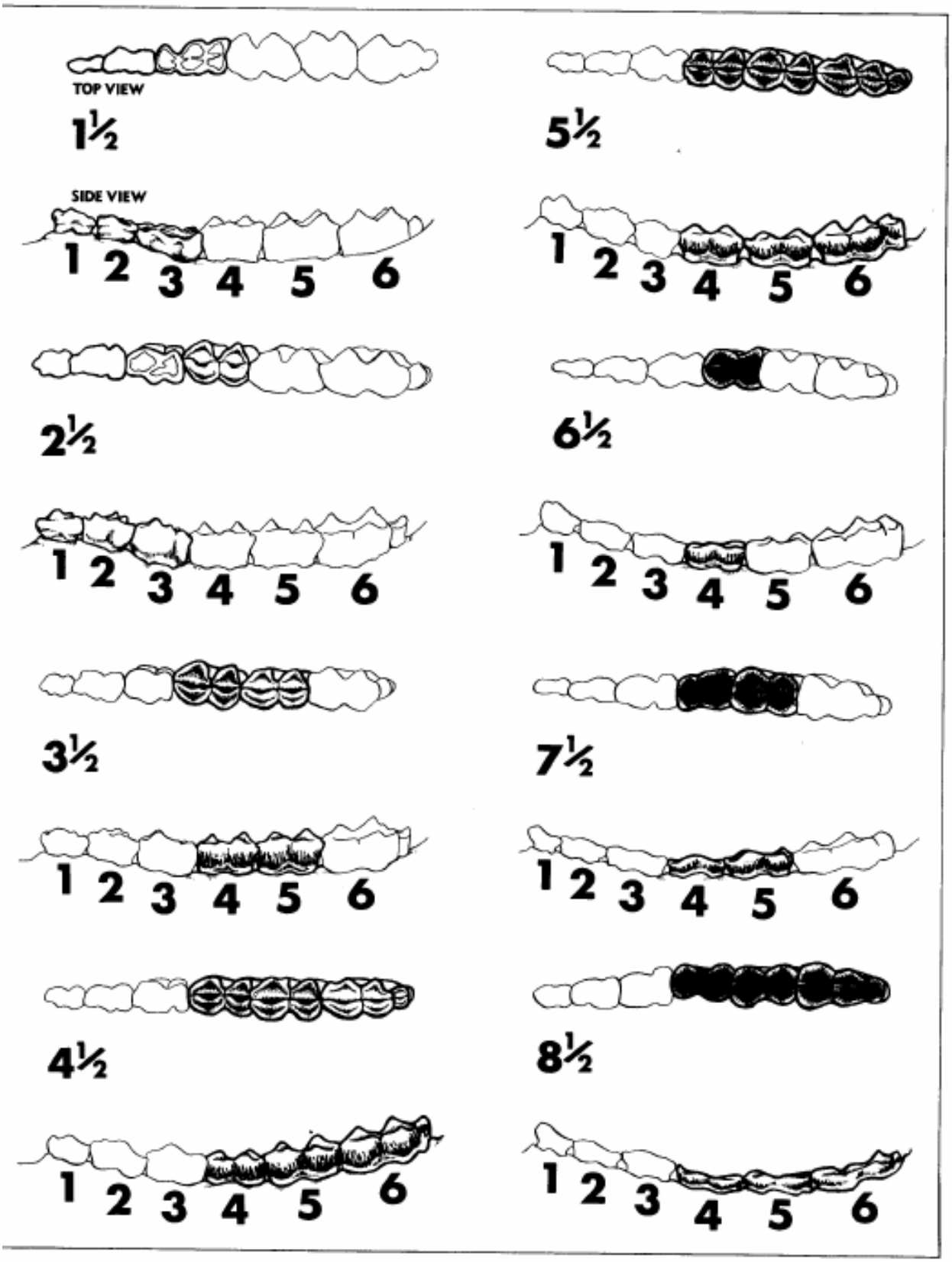
TOP VIEW
1½
SIDE VIEW
1 2 3 4 5 6
2½
1 2 3 4 5 6
3½
1 2 3 4 5 6
4½
1 2 3 4 5 6
5½
1 2 3 4 5 6
6½
1 2 3 4 5 6
7½
1 2 3 4 5 6
8½
1 2 3 4 5 6

The Way to Weigh

by Charles Ramsey
and
Melvin J. Anderegg

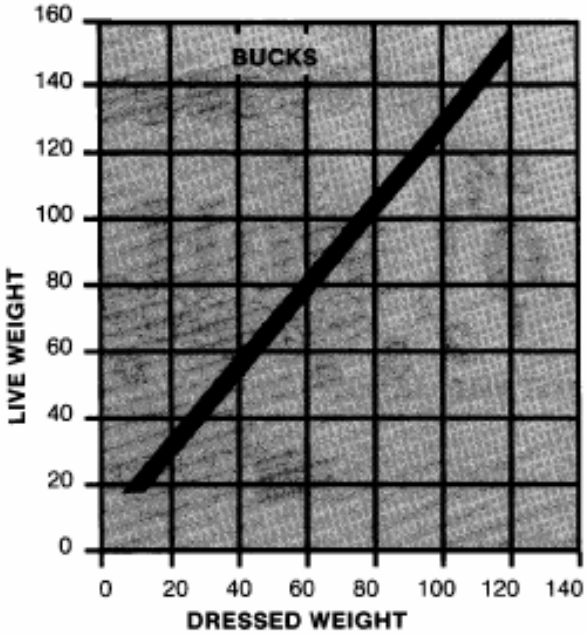

Find dressed weight of buck in figures at bottom of chart and trace line up to diagonal. From intersection, trace line to scale at left and read live weight. Reverse this procedure to determine dressed weight of live animal.

Does are lighter than bucks so a different chart must be used. As above, find dressed weight of doe in scale at bottom, trace up to diagonal, then from intersection trace line to left and read estimated live weight.

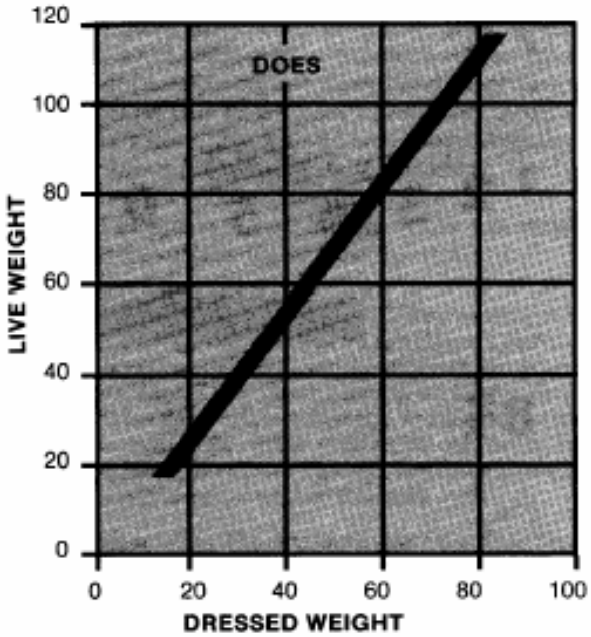

A **PICKUP** with two hunters drove up to the deer check station on the Kerr Wildlife Management Area. Both hunters climbed out, and walked around to the back of the truck and began unloading a couple of deer.

The first deer, a small doe, was tossed upon the table in the check station. Area personnel field dressed the deer and recorded descriptive measurements and weights. Then the doe was loaded back into the truck.

The second deer, a large buck, was lifted onto the table and the process of measuring and recording was repeated. Since the buck was already field dressed, only a dressed weight was taken—106 pounds field dressed. How big was that deer on the hoof?

This question has been repeated so many times at the check station that two graphs were prepared to help with the answer. These graphs represent the weights taken from approximately 200 deer in good body condition killed on the Kerr Wildlife Management Area. Since these deer were typical of the Edwards Plateau, the graphs will be applicable for deer taken within the Hill country. Although not as accurate, they are also good guides for deer taken from other areas of the state.

Dressed weight means "field dressed" with head, hide, and feet left on the carcass.

Visit the outdoors each month through the full-color pages of ***Texas Parks & Wildlife*** magazine.

To subscribe, call **1-800-792-1112** Monday through Friday between 8 a.m. and 5 p.m.

Rates:

1 year $10	**Foreign 1 year $12**
2 years $18	**Foreign 2 years $21**
3 years $26	**Foreign 3 years $30**

(Domestic rates include APO & FPO)

TEXAS PARKS & WILDLIFE Magazine
4200 Smith School Road
Austin, Texas 78744

Dispersal of this publication conforms with Texas State Documents Depository Law, and it is available at Texas State Publications Clearinghouse and Texas Depository Libraries.

PWD-BK-7100-7-12/89

Appendix Z

Pesticides and Brush Control
Texas Department of Agriculture

Pesticide Registration and Safety

The U.S. Environmental Protection Agency (EPA) and the Texas Department of Agriculture (TDA) register all pesticides used for brush control in the state of Texas. The Federal Insecticide, Fungicide and Rodenticide Act (FIFRA), the Food Quality Protection Act (FQPA), and Federal Food, Drug and Cosmetic Act (FFDCA) all regulate the use of pesticides in Texas to some degree. However, FIFRA and Texas pesticide laws and regulations are primarily involved in the registration process of brush control herbicides.

To be eligible for registration and use in Texas, pesticide products must first undergo a rigorous testing protocol required by EPA and then be registered federally. The testing protocol is extensive and must address issues such as efficacy and toxicity to non-target species. The vast majority of pesticide products that are registered in Texas are subject to over 140 scientific or toxicological tests in order to receive and maintain EPA product label approval, and subsequent Texas registration. Automatic approval does not occur for use of a pesticide in Texas if it is approved by EPA. Pesticides must meet state use and registration regulations in addition to strict EPA standards. The exact number of tests that must be performed for a pesticide to be allowed in Texas varies with its end-use, but it is extensive whatever the case. EPA evaluates a plethora of scientific studies before registering a product and uses a series of safety factors to determine the appropriate use patterns considering worst-case exposure scenarios.

Native Texas wildlife, especially threatened and endangered species, are given further consideration when performing risk assessments for the special use of pesticides in many brush control projects. Various classes of species are specifically targeted for detailed assessment, namely the chemical effects on amphibians and reptiles, birds, fish and invertebrates. The environmental fate of most compounds used in brush control is also carefully reviewed in order to protect water supplies. Factors such as degradative processes, absorption and mobility, field dissipation, as well as local ground and surface water concerns are considered in risk assessments, especially during special use considerations such as a FIFRA Section 24(c) allowances as discussed below.

Toxicity Category	Herbicide / Substance	Oral LD50	Equivalent Human Dose
I Severe Danger	Botulinus	0.00001	1 teaspoon or less
	TCDD (a dioxin)	0.1	
	Parathion	13	
	Strychnine	30	
	Nicotin	50	
II Moderate	Caffeine	200	1 teaspoon to 1 ounce
	2,4-D	375	
III Slight (caution)	Formaldehyde	800	1 ounce to 1 pint
	Aspirin, Vitamin	1700	
	Bleach	2000	
	Table	3750	
	Diuron	3750	
	Glyphosat	4320	
IV Very Slight	Imazapy	>5000	More than 1 pint
	Diesel	7380	
	Kerosen		
	Sugar		

Table 1: The equivalent human dose is that physical amount of the compound that would contain the oral lethal dose 50 (LD_{50}) amount.

In reality and for all practical purposes of assessment, the amount of pesticide that a sensitive species must be exposed to and cause a harmful effect is very unlikely to be seen with any use of a pesticide product (Table 1). Even when these species may encounter these registered pesticides in a natural setting, most of these chemicals have relatively low toxicity or similar toxicity to that of many household or natural materials (Table 2).

Table 2. Overall toxicity rating based on the LD_{50} and the dermal response rating are from 1 to 5, with 5 being the least severe

COMMON NAME	TRADE NAME	ORAL LD50 mg/Kg	TOXICITY RATING	DERMAL RESPONSE RATING
nicotine	for comparison	50-60	2	-
paraquat	Surefire	120	3	3
caffeine	for comparison	200	3	-
diquat	Diquat	230	3	4
2,4-D	various brands	600	4	4
tebuthiuron	Spike	644	4	4
MSMA	various brands	1,800	4	4
Aspirin	for comparison	1,240	4	-
hexazinone	Velpar	1,690	4	4
dicamba	Banvel	2,900	4	4
prometon	Pramitol	2,980	4	-
atrazine	various brands	3,080	4	5
pendimethalin	Pendulum	3,277	4	4
Table salt	for comparison	3,320	4	-
diuron	Direx, Karmex	3,400	4	4
bromacil / diuron	Krovar	4,260	4	5
glyphosate	Roundup	4,320	4	5
sulfometuron methyl	Oust	>5000	5	4
imazapyr	***Arsenal***	>5000	5	4
imazapic	Plateau	>5000	5	5
prodiamine	Endurance	>5,000	5	4
simazine	Princep	5,000	5	4
bromacil	Hyvar	5,200	5	4
chlorsulfuron	Telar	5,545	5	5
picloram	Tordon	8,200	5	4
oryzalin	Surflan	10,000	5	4
norflurazon	Predict	>10,000	5	4
fosamine	Krenite	24,000		4

FIFRA Section 24(c) Special Registration

A FIFRA Section 24(c) is designed to expand a currently registered product label in the state of Texas for a documented special local need (SLN). A SLN means an existing or imminent pest problem within Texas for which TDA, based upon satisfactory supporting information, has determined that an appropriate federally registered pesticide product is not sufficiently available. Documentation of need for the 24(c) registration in the form of letters from producers, grower organizations, experiment station personnel, and/or extension service personnel, must be provided to EPA. Research and/or test data, or summaries supporting efficacy and safety must be submitted. In addition, data documenting expected residue levels (when appropriate, mainly when food or feed crops are involved) must also be supplied with the application packet to EPA. Prior to issuing a Section 24(c), EPA and TDA determine that use of the product for which registration is sought will not cause unreasonable adverse effects

on man or the environment when used in accordance with labeling directions or widespread and commonly recognized practices. Endangered and threatened species are especially considered when evaluating special uses of pesticides. The U.S. Fish and Wildlife Service, Texas Parks and Wildlife Department and TDA are in regular contact concerning the well being of all native Texas species.

The Texas Department of Agriculture obtained a FIFRA Section 24(c) Special Local Need registration to use *Arsenal®* (active ingredient imazapyr) to control saltcedar to conserve water and protect native habitats.

In fact, in several cases, saltcedar is being controlled with *Arsenal®* to enhance wildlife habitat. The Canadian Municipal Water District is planning to control salt cedar beginning in September 2004 along the Canadian River. This effort is being made to stop the spread of salt cedar, which is estimated to consume almost 70,000 acre feet of water each year in the river basin, and to enhance habitat for the Arkansas River Shiner. In addition, U.S. Fish & Wildlife Service and Panhandle Water Conservation District officials have proposed a joint project to finance the control of salt cedars along the Canadian River to enhance habitat for the Arkansas River shiner.

In another instance, the U.S. Fish & Wildlife Service and Fort Worth Zoo requested that TDA change the restriction on the use of *Arsenal®* in Salt Creek in Culberson County to enhance habitat for the endangered Pecos Gambusia. Additionally, the Colorado River Municipal Water District has worked with U.S. Fish & Wildlife and the Texas Parks and Wildlife Department to use *Arsenal®* along the Colorado River to preserve habitat for the endangered Concho water snake and the endangeredTexas poppy-mallow. The Concho water snake is not affected by *Arsenal®* because this chemical generally only affects plant species. The Texas poppy-mallow is not affected by the saltcedar spraying because its habitat is not near saltcedar due to different soil preferences between the two plant species. Additionally, GIS mapping is done before helicopter spraying of *Arsenal®* to pinpoint Texas poppy-mallow habitat.

Saltcedar (*Tamarisk*) Control in Texas

Saltcedar (*Tamarix spp.*) was introduced into the southwestern United States in the early 1800s from Eurasia as an ornamental shrub that aided in erosion control. A mature saltcedar may consume up to 200 gallons of water per day and is a problem for most of the western United States. Saltcedar trees occur in almost all of the water bodies of west Texas including the Pecos, Brazos, Canadian, Colorado, Rio Grande and Red rivers, and their tributaries.

Saltcedar has the ability to change its physical environment giving it a competitive advantage over native trees and shrubs. This occurs through increased surface soil salinity, lowered soil water potential and increased fire frequency. This invasive increases surface soil salinity by absorbing salts from deeper soil layers and groundwater and transporting these salts to their leaves, subsequently releasing the salts back into the surrounding soils through accumulation of leaf litter. The high tolerance for salt that saltcedar possesses allows for a competitive advantage. Increased soil salinity inhibits germination and growth of most other plant species.

The Texas Department of Agriculture is leading the Texas Riparian Invasive Plant (TXRIP) Taskforce in its endeavors to combat the spread of invasive riparian plants, especially saltcedar. This Taskforce is composed of almost every major state and federal agency with a mandate on this issue. TXRIP joins the US

Tamarisk Coalition, the US Department of Interior, and the US Department of Agriculture in addressing this serious national problem. All scientifically tested methods for saltcedar control are assayed for use in control programs, including biological, chemical, and mechanical options.

Recent applications of federally approved herbicides, including *Arsenal*®, has proven to be a very effective and safe tool to control saltcedar in selected segments of Texas waterways. This has spurred an interest in using this means of control in other infested water systems.

Appendix AA

Requirements for Supplemental Shelter - Edwards Plateau, Crosstimbers

NEW: Summary guidance for *supplemental shelter* intensity levels. The following documents are intended for guidance only, and represent what would be the desired number of supplemental shelters for various species that a landowner should strive for. Because each individual property is different and effective use of supplemental shelter for wildlife enhancement will vary based on individual site characteristics, these numbers should be used as guidance only. Additional information is available from your local biologist or on the TPWD web site at www.tpwd.state.tx.us/wildscapes. Be sure to study the general guidelines for agricultural tax valuation based on wildlife management. See Wildlife Management Activities And Practices: Comprehensive Wildlife Management Planning Guidelines for your region. It's the book to which this is an appendix.

Species:	**Shelter Type:**	**Minimum no. per area of suitable habitat**
Bats	Bat house	1 per 30 acres.
Great crested flycatcher, E. Bluebird, Carolina Chickadee, Tufted Titmouse, White-breasted Nuthatch, Brown-headed Nuthatch, Bewick's Wren, Carolina Wren, Prothonotary Warbler	Nest Box	1 per 5 acres. Maximum number required in the aggregate: 40.
Squirrel	Nest Box	1 per 5 acres.
Various Woodpeckers	Resting cavity	1 per 10 acres.
Wood duck, Black-bellied whistling duck	Nest box	1 per 8 acres.
American Kestrel, Barn Owl, Eastern Screech Owl, Barred Owl	Nest Box	1 per 10 acres.
Purple Martin	Nest Box	1 site per 30 acres. Minimum 8 cavities per site.