# EISENHOWER STATE PARK
RESTROOM REPLACEMENT

PROJECT NO: 1210136 DATE: 01/22/2021

NORTH

## COUNTY LOCATION MAP
NOT TO SCALE

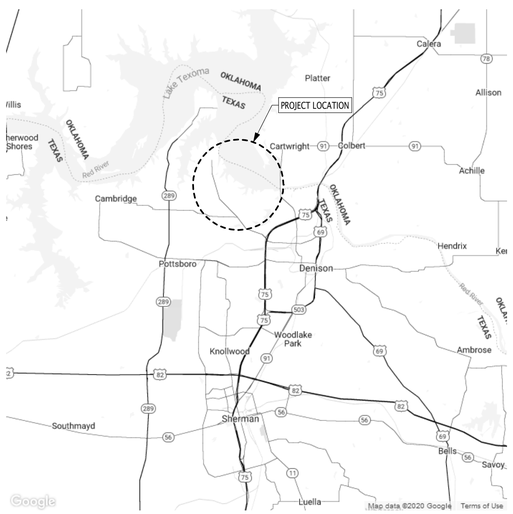


NORTH

## VICINITY MAP
NOT TO SCALE

NORTH

## SITE LOCATION MAP
NOT TO SCALE

**SITE ADDRESS:**
Armadillo Hill Restroom
50 Park Road 20
Denison, TX 75020

## INDEX OF DRAWINGS


| SHEET # | SHEET NAME |
|---|---|
| GENERAL | |
| G000 | COVER SHEET |
| G101 | CODE PLAN |
| G102 | ACCESSIBLE SHOWERS |
| CIVIL | |
| C001 | TOPOGRAPHIC SURVEY |
| C101 | CIVIL GENERAL NOTES |
| C201 | DEMOLITION PLAN |
| C202 | UTILITY DEMOLITION PLAN |
| C301 | SITE PLAN |
| C401 | PAVING PLAN |
| C501 | GRADING PLAN |
| C601 | UTILITY PLAN |
| C701 | EROSION CONTROL PLAN |
| C702 | EROSION CONTROL DETAILS |
| C801 | CIVIL DETAILS |
| C802 | CIVIL DETAILS |
| LANDSCAPE | |
| L101 | LANDSCAPE PLAN |
| L601 | LANDSCAPE NOTES |
| L801 | LANDSCAPE DETAILS |
| ARCHITECTURAL | |
| A111 | FLOOR & WALL TYPES PLAN |
| A112 | CLERESTORY PLAN AND DETAILS |
| A121 | FINISH AND SIGNAGE PLAN |
| A131 | REFLECTED CEILING PLAN |
| A141 | ROOF PLAN |
| A201 | EXTERIOR ELEVATIONS |
| A202 | EXTERIOR ELEVATIONS |
| A301 | BUILDING SECTIONS |
| A401 | MENS RESTROOM |
| A402 | WOMENS RESTROOM |
| A403 | FAMILY RESTROOMS |
| A601 | DOOR SCHEDULE, ELEVATIONS AND DETAILS |
| A811 | INTERIOR DETAILS |
| A911 | ALTERNATES |

| SHEET # | SHEET NAME |
|---|---|
| STRUCTURAL | |
| S101 | STRUCTURAL NOTES |
| S102 | STRUCTURAL NOTES |
| S103 | ABBREVIATIONS & SYMBOLS LEGEND |
| S104 | SPECIAL INSPECTIONS |
| S201 | FOUNDATION PLAN |
| S202 | ROOF FRAMING PLAN |
| S301 | TYPICAL CONCRETE SECTIONS & DETAILS |
| S302 | TYPICAL CONCRETE SECTIONS & DETAILS |
| S303 | CONCRETE DETAILS |
| S401 | TYPICAL MASONRY SECTIONS & DETAILS |
| S402 | TYPICAL MASONRY SECTIONS & DETAILS |
| S410 | MASONRY ELEVATION |
| S601 | TYPICAL WOOD DETAILS |
| MECHANICAL | |
| M001 | MECHANICAL COVER SHEET |
| M101 | MECHANICAL PLAN |
| M401 | MECHANICAL EQUIPMENT SCHEDULES |
| PLUMBING | |
| P001 | PLUMBING COVER SHEET |
| P101 | PLUMBING UNDERGROUND PLAN-SANITARY & VENT |
| P102 | PLUMBING ABOVEGROUND PLAN-SANITARY & VENT |
| P103 | PLUMBING PLAN - ROOF |
| P201 | PLUMBING WATER & PROPANE PLAN AND SECTIONS |
| P301 | PLUMBING DETAILS |
| P302 | PLUMBING DETAILS |
| P401 | PLUMBING EQUIPMENT SCHEDULES |
| P402 | PLUMBING EQUIPMENT SCHEDULES |
| P601 | PLUMBING SANITARY RISER |
| P602 | PLUMBING PROPANE RISER |
| ELECTRICAL | |
| E001 | ELECTRICAL COVER SHEET |
| E100 | ELECTRICAL PLAN - SITE |
| E101 | ELECTRICAL PLAN - LIGHTING |
| E102 | ELECTRICAL PLAN - POWER |
| E301 | ELECTRICAL DETAILS & SCHEDULES |


## BUILDING CODE SUMMARY

A. INTERNATIONAL CODE COUNCIL ADOPTIONS*
1. BUILDING CODE 2015 INTERNATIONAL BUILDING CODE
2. STRUCTURAL CODE 2015 INTERNATIONAL BUILDING CODE
3. PLUMBING CODE 2015 INTERNATIONAL PLUMBING CODE
4. MECHANICAL CODE 2015 INTERNATIONAL MECHANICAL CODE
5. GAS CODE 2015 INTERNATIONAL FUEL GAS CODE
6. RESIDENTIAL CODE 2015 INTERNATIONAL RESIDENTIAL CODE
7. EXISTING BUILDINGS 2015 INTERNATIONAL EXISTING BUILDING CODE
* INTERNATIONAL FIRE CODE OMITTED IN LIEU OF TPWD'S IMPLEMENTATION OF NATIONAL FIRE PROTECTION ASSOCIATION CODES. 2015 INTERNATIONAL ENERGY CONSERVATION CODE OMITTED IN LIEU OF ENERGY STANDARD FOR BUILDINGS, ASHRAE/IESNA STANDARD 90.1 (2016)

B. NATIONAL FIRE PROTECTION ASSOCIATION
1. ELECTRICAL CODE 2020 NATIONAL ELECTRIC CODE, NFPA-70
2. FIRE CODE 2015 NFPA-1
3. LIFE SAFETY CODE 2015 NFPA-101

C. STATE ENERGY CONSERVATION OFFICE (SECO)/TEXAS COMPTROLLERS OFFICE
1. ENERGY CODES FOR STATE BUILDINGS - ENERGY CONSERVATION DESIGN STANDARDS: TEXAS ADMINISTRATIVE CODE, TITLE 34, PART 1, CH. 19, SUBCHAPTER C
a. COMPLIANCE WITH THE ENERGY CONSERVATION DESIGN STANDARD OF THE AMERICAN NATIONAL STANDARDS INSTITUTE (ANSI)/ASHRAE/ILLUMINATING ENGINEERING SOCIETY OF NORTH AMERICA (IESNA), ENERGY STANDARD FOR BUILDINGS, ANSI/ASHRAE/IESNA STANDARD 90.1 (2016)
SEE SECO WEBSITE FOR STATE FUNDED BUILDINGS, NEW CONSTRUCTION AND MAJOR RENOVATION REQUIREMENTS AND SECO COMPLIANCE CERTIFICATION FORMS
2. WATER CONSERVATION STANDARDS FOR STATE BUILDINGS - ENERGY CONSERVATION DESIGN STANDARDS: TEXAS ADMINISTRATIVE CODE, TITLE 34, PART 1, CH. 19, SUBCHAPTER C
a. COMPLIANCE WITH THE WATER CONSERVATION DESIGN STANDARDS FOR STATE BUILDINGS AND INSTITIUTIONS OF HIGHER EDUCATION FACILITIES, STATE ENERGY CONSERVATION OFFICE (SECO), 2016
SEE SECO WEBSITE FOR TEXAS WATER CONSERVATION DESIGN STANDARDS, REQUIREMENTS AND SECO COMPLIANCE CERTIFICATION/REPORTING FORM

D. ACCESSIBILITY CODES
1. US DEPT. OF JUSTICE, 2010 ADA STANDARDS FOR ACCESSIBLE DESIGN
2. ARCHITECTURAL BARRIERS ACT ACCESSIBILITY GUIDELINES; OUTDOOR DEVELOPED AREAS, NOVEMBER 25, 2013
3. 2012 TEXAS ACCESSIBILITY STANDARDS, ELIMINATION OF ARCHITECTURAL BARRIERS, TEXAS GOVERNMENT CODE, CHAPTER 469

E. PLAYGROUND SAFETY CODE
1. ASTM F1487-17, STANDARD CONSUMER SAFETY PERFORMANCE SPECIFICATIONS FOR PLAYGROUND EQUIPMENT FOR PUBLIC USE
2. ASTM F2223-15, STANDARD GUIDE FOR ASTM STANDARDS ON PLAYGROUND SURFACING

## SCOPE OF WORK

BASE OF DESIGN: The design of a new restroom building to replace an existing restroom building at Armadillo Hill Camp Loop Restroom Facility in Eisenhower State Park. The new restroom building shall include amenities for men and women, inclusive of 4 toilets on the women's side, 2 urinals and 2 toilets on the men's side, 3 lavatories each side, 3 showers each side, and 2 family restrooms with showers. Project to include demolition of existing restroom building, upgrades to utilities, renovation of existing parking to include accessible parking, walkways, and other site improvements required for the new facility.
ALTERNATE 01: Provide polished finish face on all CMU blocks in lieu of standard finish faces. See Sheet A911.
ALTERNATE 02: Replace all 8"x4"x16" CMU block with 8"x8"x16" CMU block. Provide White Limestone CMU block color only for all exterior walls. See Sheet A911.

## DESIGN TEAM


ARCHITECTURAL
NICK PALLUTH
GSBS ARCHITECTS
FIRM REGISTRATION NO. BR2895
(817) 589-1722
NPALLUTH@GSBSARCHITECTS.COM

CIVIL
DARIN JENNINGS
JQ ENGINEERING
FIRM REGISTRATION NO. F-7986
(214) 623-5862
DJENNINGS@JQENG.COM

STRUCTURAL
DAVID WALKER
JQ ENGINEERING
FIRM REGISTRATION NO. F-7986
(817) 505-4307
DWALKER@JQENG.COM

MEP
CHRIS SIMS
B&H ENGINEERS, INC.
FIRM REGISTRATION NO. 9102
(214) 496-1670
CSIMS@BANDHENGINEERS.COM


TEXAS PARKS & WILDLIFE

# TEXAS PARKS AND WILDLIFE

## INFRASTRUCTURE DIVISION

4200 SMITH SCHOOL ROAD • AUSTIN, TEXAS 78744-3292

REGISTERED ARCHITECT
NICHOLAS A. PALLUTH
24770
STATE OF TEXAS

01/22/2021
SIGNATURE DATE


OWNERSHIP OF INSTRUMENTS OF SERVICE AND COPYRIGHT
ALL REPORTS, PLANS, SPECIFICATIONS, COMPUTER FILES, FIELD DATA, NOTES, AND OTHER DOCUMENTS AND INSTRUMENTS PREPARED BY GSBS/BATENHORST INC. AS INSTRUMENTS OF SERVICE SHALL REMAIN THE PROPERTY OF GSBS. GSBS SHALL RETAIN ALL COMMON LAW, STATUTORY AND OTHER RESERVED RIGHTS, INCLUDING THE COPYRIGHT THERETO. ANY PUBLIC COMMUNICATION OR DISTRIBUTION OF THIS DRAWING IS PROHIBITED WITHOUT THE WRITTEN AUTHORIZATION OF GSBS.


mweinzie 02/09/2021 4:04:27 PM

TEXAS PARKS & WILDLIFE

RELEASED FOR SOLICITATION

INFRASTRUCTURE DIVISION

100% CONSTRUCTION DOCUMENTS

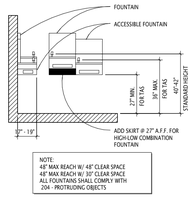


## HI-LO FOUNTAIN

REFER TO T.A.S. 602, 204 AND 307

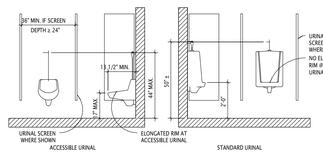


## URINAL DETAILS

REFER TO T.A.S. 605

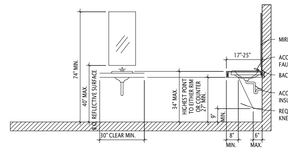


## LAVATORY SINK SECTION

REFER TO T.A.S. 606 LAVATORIES AND SINKS

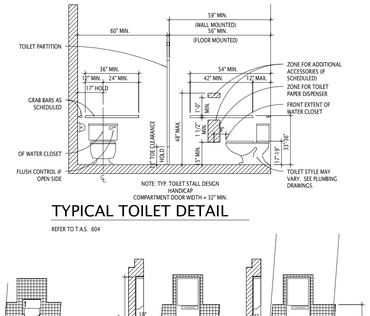


## TYPICAL TOILET DETAIL

REFER TO T.A.S. 604

## GENERAL NOTES:

1. SEE FLOOR PLAN, ENLARGED RESTROOM KITCHEN DETAILS, AND PLUMBING DRAWINGS FOR EXACT FIXTURES AND ACCESSORIES USED.
2. IF USED, ALL ALARMS SHALL COMPLY WITH 'TAS' 215 AND 702.
3. CONTRACTOR SHALL BE RESPONSIBLE FOR COMPLIANCE WITH 'TEXAS ACCESSIBILITY STANDARDS' AND 'AMERICANS WITH DISABILITIES ACT.'
4. CLEARANCES AND MOUNTING HEIGHTS VARY FOR CHILDREN OF DIFFERENT AGES. REFER TO 'TAS' 308 FOR REQTS.
5. ALL DOOR OPENING FORCES SHALL COMPLY WITH 'TAS' 404.2.9. INTERIOR HINGED DOORS & SLIDING OR FOLDING DOORS SHALL BE 5 LBF MAX.
6. NOT ALL DRAWINGS ARE APPLICABLE TO THIS PROJECT
7. DIMENSIONS ARE FROM FACE OF FINISH TO FACE OF FINISH.

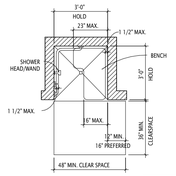


REFER TO T.A.S. 903 BENCHES OR 608 SHOWER COMPARTMENTS

## SHOWER PLAN

REFER TO T.A.S. 608

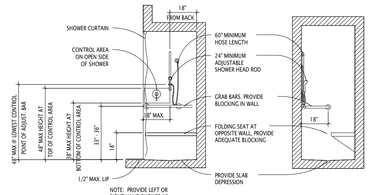


## TYP. SHOWER DETAILS

REFER TO T.A.S. 608

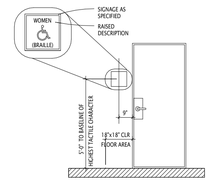


## SIGNAGE

REFER TO T.A.S. 216 SIGNS & 703

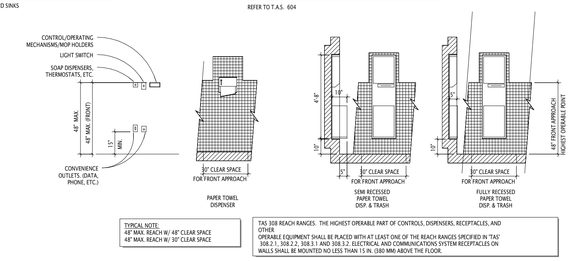


## CONTROLS AND OPERATING MECHANISMS

REFER TO T.A.S. 205 OPERABLE PARTS AND 309 OPERABLE PARTS

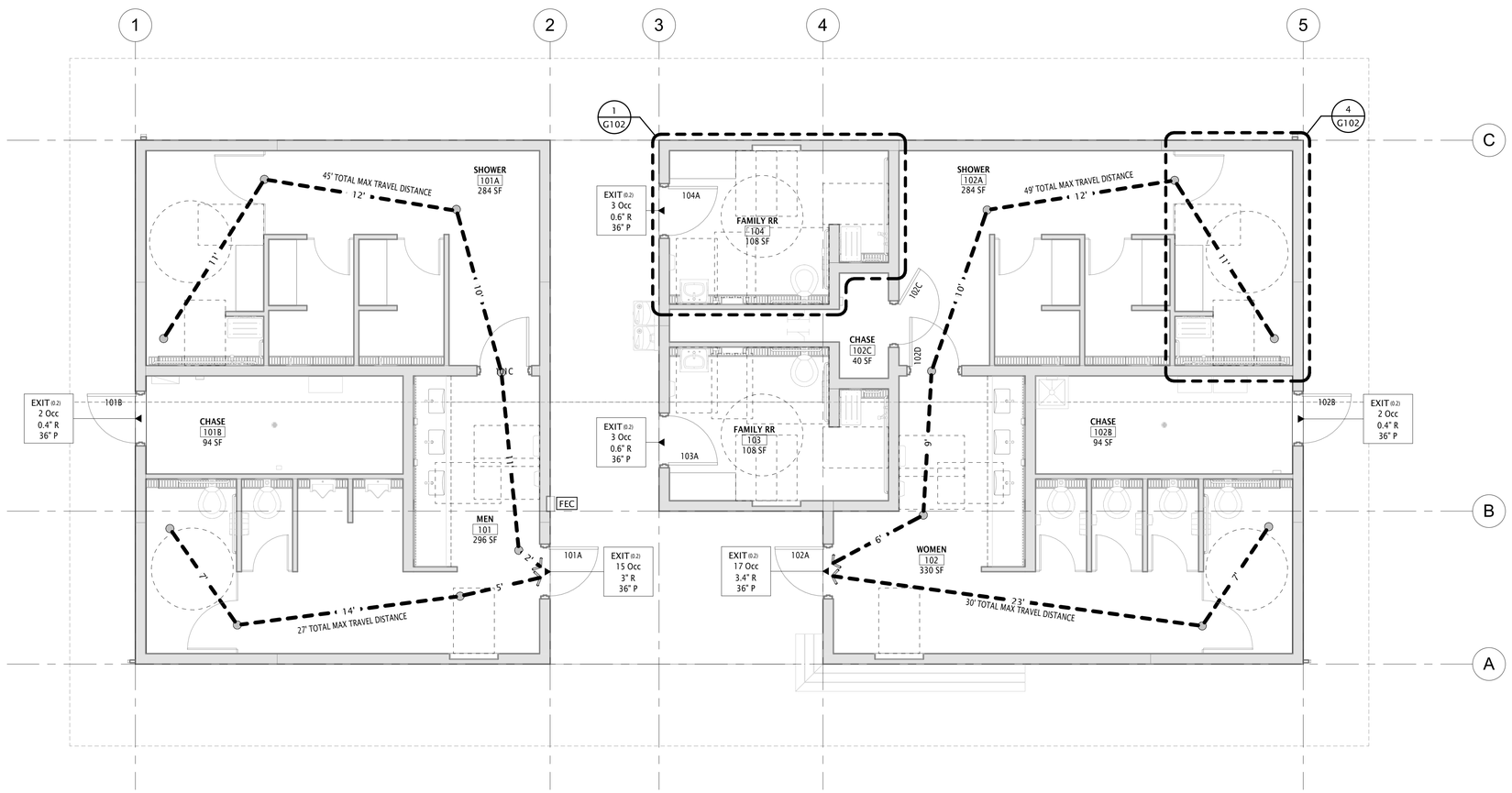


1 G101 CODE PLAN
1/4" = 1'-0"

01/22/2021
SIGNATURE DATE

OWNERSHIP OF INSTRUMENTS OF SERVICE AND COPYRIGHT.
ALL REPORTS, PLANS, SPECIFICATIONS, COMPUTER FILES, FIELD DATA, NOTES, AND OTHER DOCUMENTS AND INSTRUMENTS PREPARED BY GSBS/BATENHORST INC. AS INSTRUMENTS OF SERVICE SHALL REMAIN THE PROPERTY OF GSBS. GSBS SHALL RETAIN ALL COMMON LAW, STATUTORY AND OTHER RESERVED RIGHTS, INCLUDING THE COPYRIGHT THERETO. ANY PUBLIC COMMUNICATION OR DISTRIBUTION OF THIS DRAWING IS PROHIBITED WITHOUT THE WRITTEN AUTHORIZATION OF GSBS.

## CODE PLAN LEGEND

- NO. OF OCCUPANTS
- CORRIDOR TRIBUTARY LOAD
- TOTAL NO. OF OCCUPANTS AT EXIT
- EXIT (D.15) X.XXX OCC X'-X" R X'-X" P — LOCATION (EXIT WIDTH FACTOR); OCCUPANT NUMBER; REQUIRED EXIT WIDTH; PROVIDED EXIT WIDTH
- FEC — FIRE EXTINGUISHER CABINET

## CODE ANALYSIS

### APPLICABLE CODES

| | Year | | Year |
|---|---|---|---|
| International Building Code | 2015 | National Electrical Code | 2020 |
| International Mechanical Code | 2015 | Uniform Code for Building Conservation | 2015 |
| International Plumbing Code | 2015 | ADA Accessibility Guidelines ICC/ANSI A117.1 | 2010 |
| International Fire Code | 2015 | | |
| International Energy Conservation Code | 2015 | | |

A. Occupancy and Group (IBC 306 & 508.3.1): U-UTILITY

B. Seismic Design Category (IBC 1613): C
Design Wind Speed (IBC 1609): 120 mph

C. Type of Construction (IBC 602.2):

| I | I | II | II | III | III | IV | V | V |
|---|---|---|---|---|---|---|---|---|
| A | B | A | B | A | B | HT | A | B |

D. Sprinklers (IBC 903): Required: NO Provided: NO
Type of Sprinkler System: N/A

E. Number of Stories (IBC 503 & 504.2): 1 Building Height: 15'-10"

F. Actual Area per Floor (square feet): 2,060

G. Tabular Area ($A_t$)(IBC Table 503): 5,500 sf

H. Fire Resistance Rating Requirements for Building Elements (hours)(IBC Table 601)
Fire Resistance Rated Construction Requirements (hours) (IBC Tables 705.4, 706.3.9, Sections 707, 708, 709, 710)

| Element | Hours | Assembly Listing | Element | Hours | Assembly Listing |
|---|---|---|---|---|---|
| Exterior Bearing Walls | 0 | | Floors - Ceiling Floors | 0 | |
| Interior Bearing Walls | 0 | | Roofs - Ceiling Roofs | 0 | |
| Exterior Non-Bearing Walls | 0 | | Exterior Doors and Windows | 0 | |
| Structural Frame | 0 | | | | |

J. Design Occupant Load (IBC Table 1004.1.1): 42
Exit Width Required (IBC Table 1005.1): 8.4" Exit Width Provided: 36"

K. Minimum Number of Required Plumbing Facilities (IBC Table 2902.1):
a) Water Closets - Provided: (m) 4 (f) 4 (F) 2
b) Lavatories - Provided: (m) 3 (f) 3 (F) 2
c) Bath Tubs or Showers: 8
d) Drinking Fountains - Provided: 2
e) Service Sinks - Provided: 1

FOOTNOTES:

1. In case of conflict with the U.S. Department of Justice Federal Registers Parts I through V- ADA Guidelines and specific reference to the International Building Code Accessibility Chapters, the more restrictive requirement shall govern.
2. 1006.2 Egress From Spaces
Max. occupant load for Type 'U' Occupancy is 49 for single exit at maximum common path of egress travel distance of 75 feet without a sprinkler system and occupan load greater than 30.
3. Fire Extinguishers
Class A fire hazard with light hazard occupancy requires 2-A rated extinguishers with a maximum floor area of 3,000 square feet per extinguisher and a maximum travel distance of 75 feet to an extinguisher. GC to review final locations of fire extinguishers with the local fire authority before fire extinguisher cabinets are installed. Extinguisher cabinets shall be partially recessed.
4. ASHRAE Standard 90.1 (2016)
*Comcheck not required for unconditioned spaces as defined by ASHRAE 90.1
Zone 3A
Envelope Insulation (Table C402.1.3)
Roofs
Insulation entirely above roof deck: Not required
Provided: R-30ci
Walls above grade
Mass wall: Not required
Provided: None
Slab-on-grade floors
Unheated slab: No requirement

PROJECT NORTH

TEXAS PARKS & WILDLIFE

GSBS ARCHITECTS
7291 GLEVIEW DRIVE
FORT WORTH, TX 76180
P 817 589.1722
GSBSARCHITECTS.COM
REGISTRATION NO. BR2895

# EISENHOWER STATE PARK

**RESTROOM REPLACEMENT**

PROJECT NUMBER: 1210136

DATE: 21-01-22
DESIGNED BY: NP
DRAWN BY: CJ
REVIEWED BY: SG
REVISED:
REVISED:
REVISED:

**SHEET TITLE**
CODE PLAN

SHEET NUMBER
**G101**

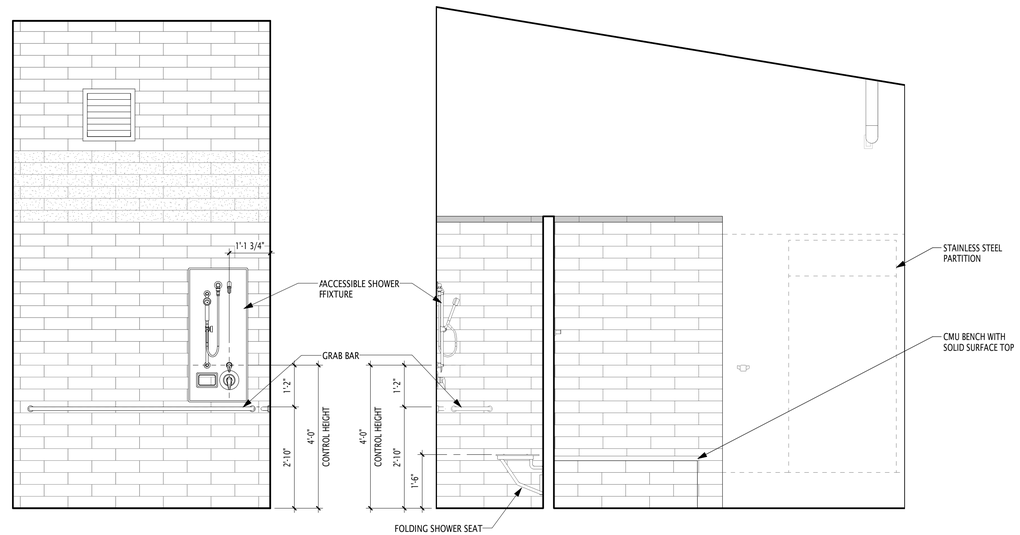


6 G102 SOUTH INT. ELEVATION
1/2" = 1'-0"

5 G102 WEST INT. ELEVATION
1/2" = 1'-0"

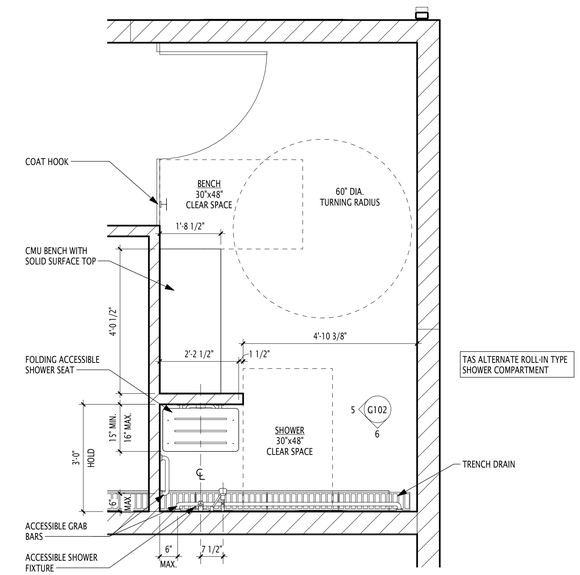


4 G102 GENDER ACCESSIBLE SHOWER, TYP.
1/2" = 1'-0"

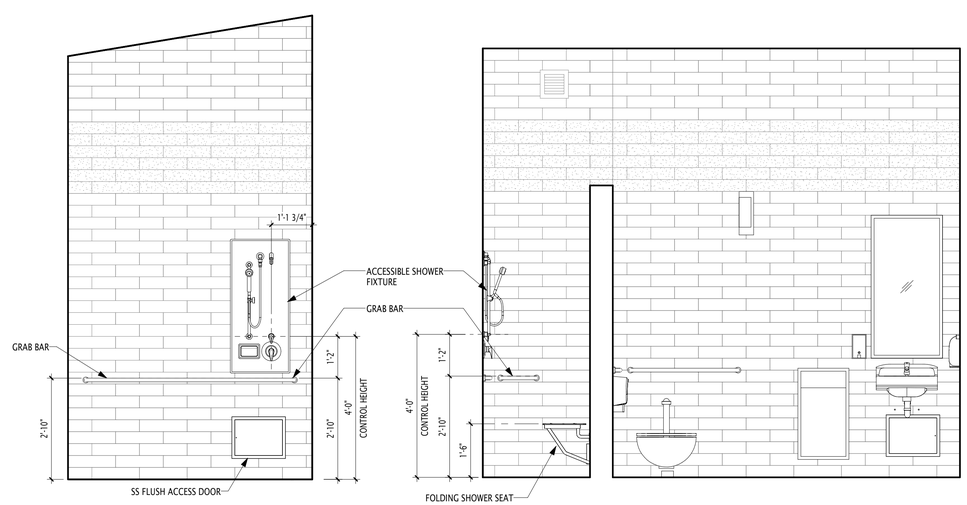


3 G102 EAST INT. ELEVATION
1/2" = 1'-0"

2 G102 SOUTH INT. ELEVATION
1/2" = 1'-0"

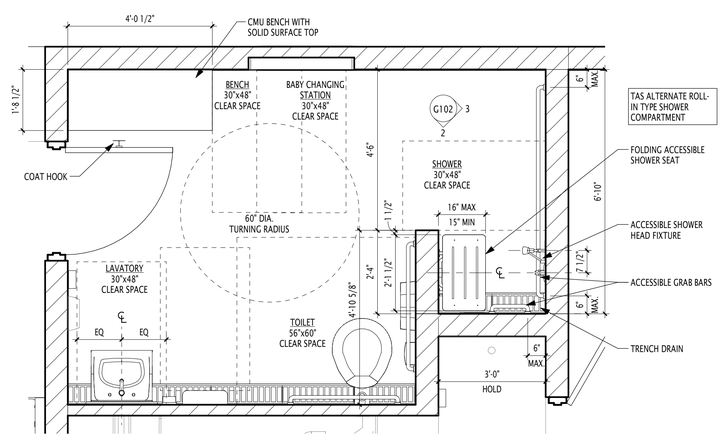


1 G102 FAMILY SHOWER, TYP.
1/2" = 1'-0"


REGISTERED ARCHITECT
NICHOLAS A. PALUTH
24770
STATE OF TEXAS
01/22/2021
SIGNATURE DATE
OWNERSHIP OF INSTRUMENTS OF SERVICE AND COPYRIGHT
ALL REPORTS, PLANS, SPECIFICATIONS, COMPUTER FILES, FIELD DATA, NOTES, AND OTHER DOCUMENTS AND INSTRUMENTS PREPARED BY GSBS/BATINHORST INC. AS INSTRUMENTS OF SERVICE SHALL REMAIN THE PROPERTY OF GSBS. GSBS SHALL RETAIN ALL COMMON LAW, STATUTORY AND OTHER RESERVED RIGHTS, INCLUDING THE COPYRIGHT THERETO. ANY PUBLIC COMMUNICATION OR DISTRIBUTION OF THIS DRAWING IS PROHIBITED WITHOUT THE WRITTEN AUTHORIZATION OF GSBS.


TEXAS PARKS & WILDLIFE


GSBS ARCHITECTS
7291 GLEVIEW DRIVE
FORT WORTH, TX 76180
P 817.589.1722
GSBSARCHITECTS.COM
REGISTRATION NO. BR2895


# EISENHOWER STATE PARK

## RESTROOM REPLACEMENT

PROJECT NUMBER: 1210136

DATE: 21-01-22
DESIGNED BY: NP
DRAWN BY: CJ
REVIEWED BY: SG
REVISED:
REVISED:
REVISED:

SHEET TITLE
ACCESSIBLE SHOWERS

SHEET NUMBER
G102

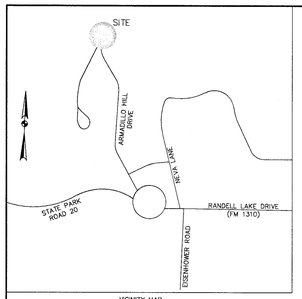


VICINITY MAP
(NOT TO SCALE)

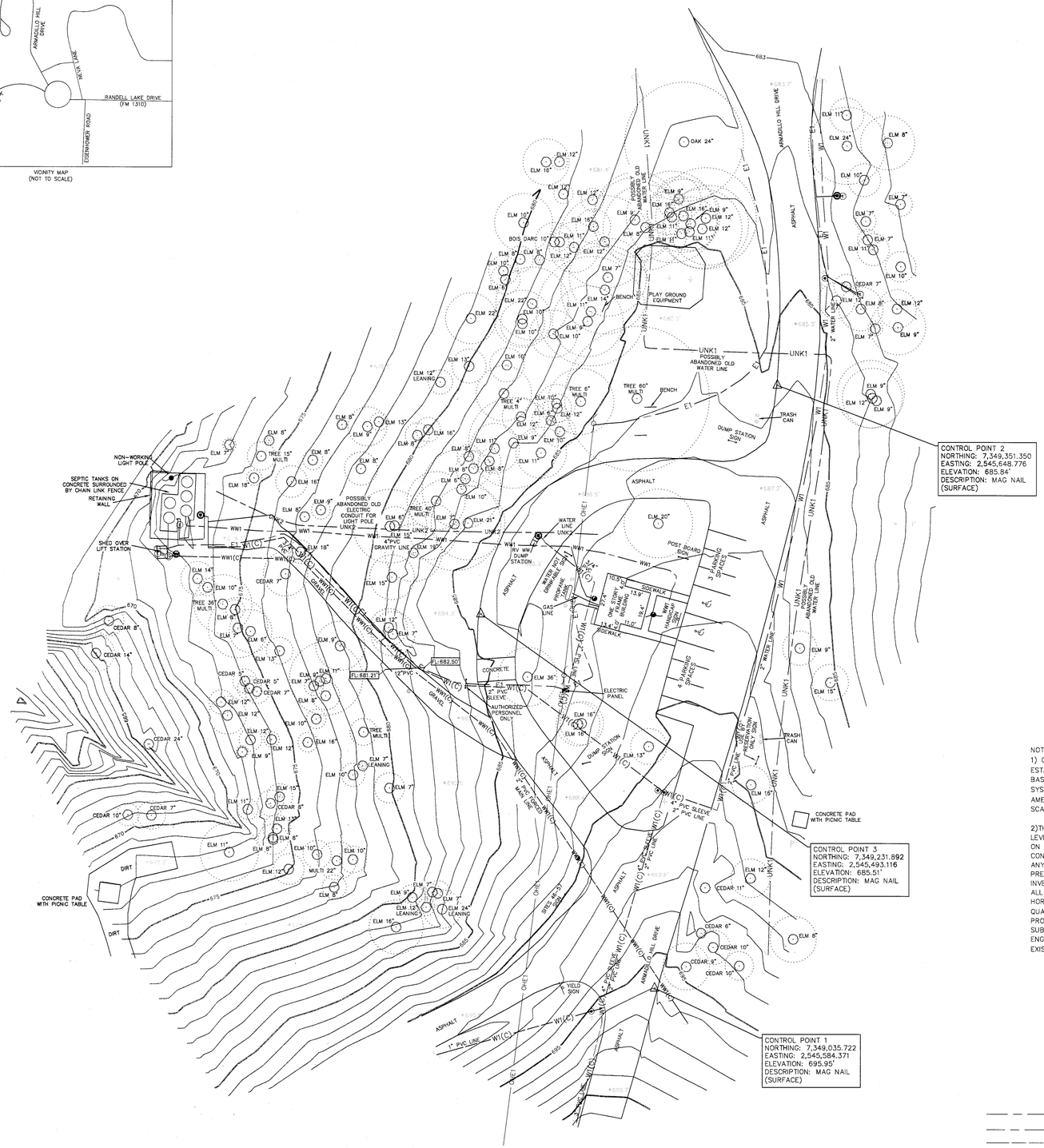


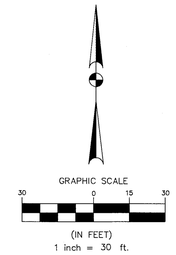


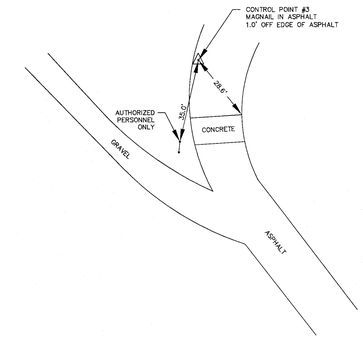


RECOVERY SKETCH
CONTROL PT 3

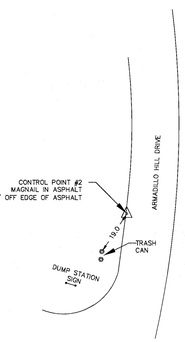


RECOVERY SKETCH
CONTROL PT 2

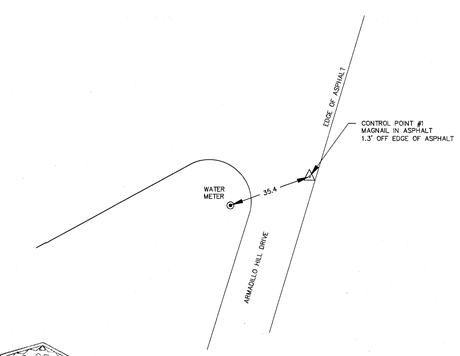


RECOVERY SKETCH
CONTROL PT 1

NOTES:

1) COORDINATES AND ELEVATIONS SHOWN HEREON ARE U.S. SURVEY FEET, ESTABLISHED USING ALLTERRA'S VIRTUAL REFERENCE SYSTEM (VRS) NETWORK BASED ON THE NORTH AMERICAN DATUM OF 1983, TEXAS COORDINATE SYSTEM, NORTH CENTRAL ZONE (4202) AND REFERENCED TO THE NORTH AMERICAN VERTICAL DATUM OF 1988, (NAVD 88). SURFACE ADJUSTMENT SCALE FACTOR 1.00012

2)THE HORIZONTAL UNDERGROUND UTILITY LINES SHOWN REPRESENT QUALITY LEVEL B SUBSURFACE UTILITY ENGINEERING SERVICES. UTILITY MARKS PLACED ON THE GROUND BY MCKIM & CREED ARE NOT TO BE USED FOR CONSTRUCTION PURPOSES. USE OF THIS INFORMATION DOES NOT RELIEVE ANY PARTY FROM THEIR OBLIGATION TO CONTACT THE UTILITY DAMAGE PREVENTION SYSTEM BEFORE DIGGING BEGINS. THIS QUALITY LEVEL B UTILITY INVENTORY DOES NOT GUARANTEE THE EXISTENCE OF EACH UTILITY OR THAT ALL THE UNDERGROUND UTILITIES HAVE BEEN ACCOUNTED FOR. EXACT HORIZONTAL AND VERTICAL POSITIONS CAN ONLY BE VERIFIED WHERE QUALITY LEVEL A (EXPOSURES) HAVE BEEN PERFORMED. SERVICES WERE PROVIDED IN ACCORDANCE WITH THE STANDARD OF PRACTICE FOR THE SUBSURFACE UTILITY ENGINEERING PROFESSION, AMERICAN SOCIETY OF CIVIL ENGINEERS STANDARD GUIDELINES FOR THE COLLECTION AND DEPICTION OF EXISTING SUBSURFACE UTILITY DATA (CI/ASCE 38-02).

## LEGEND

- E1 — ELECTRIC LINE
- WW1 — WASTE WATER QL-B
- WW1(C) — WASTE WATER QL-C
- W1 — WATER QL-B
- W1(C) — WATER QL-C
- G1 — GAS QL-B
- OHE1 — OVERHEAD ELECTRIC
- UNK1 — POSSIBLY OLD ABANDONED WATER LINE (BASED ON RECORDS UNABLE TO CONFIRM)
- UNK2 — POSSIBLY OLD ABANDONED ELECTRICAL LINE (BASED ON NON-WORKING LIGHT POLE UNABLE TO CONFIRM)
- TREE SYMBOL
- DRIP LINE
- WATER METER
- CLEAN OUT
- CLEAN OUT
- WATER RISER
- END OF QL-B INFORMATION
- WOODEN POST
- POST
- FLAG POLE
- SANITARY SEWER MANHOLE
- POWER POLE
- ELECTRICAL PEDESTAL
- DESIGNATED END POINT

STATE OF TEXAS REGISTERED ROBERT W. TERRY No. 4420 PROFESSIONAL LAND SURVEYOR

8-6-20

DRAWING PROVIDED FOR REFERENCE ONLY.
CONTACT OWNER FOR OFFICIAL COPY.

# TOPOGRAPHIC SURVEY

EISENHOWER STATE PARK
DENISON, GRAYSON COUNTY, TEXAS

McKIM&CREED
TBPELS FIRM REGISTRATION NO. 10177600
9960 WEST SAM HOUSTON PARKWAY SOUTH, SUITE 200, HOUSTON, TX 77099
TEL. 713.659.0021
WWW.MCKIMCREED.COM

| | | |
|---|---|---|
| DRWN By: CM | CHECKED By: BT | FIELD BOOK: 01224 |
| DATE: 08/05/20 | PROJECT NO. 080310001 | CAD FILE NAME: 080310001TP-SUE – Final.dwg |

NO PART OR PARTS OF THIS DRAWING MAY BE REPRODUCED OR RETRANSMITTED IN ANY WAY OR FORM (ELECTRONIC, MECHANICAL, PHOTOCOPYING, OR OTHERWISE) WITHOUT THE EXPRESS WRITTEN PERMISSION OF McKIM & CREED.

J:\080310\-001 TPWD Eisenhower State Park Topo\MD-Drawings\080310001TP-SUE – Final.dwg

## Site Plan General Notes:

1. ALL CONSTRUCTION SHALL BE IN ACCORDANCE WITH THE TEXAS PARKS AND WILDLIFE DEPARTMENT DESIGN STANDARDS. FOR ANY WORK NOT COVERED BY STATE PARK DETAILS, THE LATEST EDITION OF THE STANDARDS AND SPECIFICATIONS, NORTH CENTRAL TEXAS COUNCIL OF GOVERNMENTS (NCTCOG) STANDARD SPECIFICATIONS FOR PUBLIC WORKS CONSTRUCTION SHALL APPLY.
2. THE CONTRACTOR MUST BE FAMILIAR WITH STATE PARK AND NCTCOG CONSTRUCTION STANDARDS AND OTHER PROCEDURES PRIOR TO BIDDING AND CONSTRUCTION. IGNORANCE OF CONSTRUCTION SPECIFICATIONS SHALL NOT BE A BASIS FOR CHANGE ORDERS, WORK DELAYS, OR ADDITIONAL COMPENSATION.
3. ALL MATERIAL REQUIRED TO COMPLETE THE WORK AS SHOWN OR IMPLIED IN THE CONSTRUCTION PLANS AND AS SPECIFIED IN THE CONTRACT DOCUMENTS THAT ARE NOT LISTED AS A PAY ITEM IN THE PROPOSAL SHALL BE CONSIDERED SUBSIDIARY.
4. THE LOCATION, ELEVATIONS AND DIMENSIONS OF EXISTING UTILITIES SHOWN ON THE PLANS HAVE BEEN OBTAINED FROM FIELD MARKINGS, PHYSICAL APPURTENANCES AND UTILITY COMPANY RECORDS AND ARE CONSIDERED APPROXIMATE. THE ENGINEER DOES NOT CERTIFY THAT ALL UTILITIES ARE SHOWN. THE CONTRACTOR SHALL VERIFY EXACT LOCATIONS, SIZES AND DEPTHS OF EXISTING UTILITIES PRIOR TO CONSTRUCTION BY CONTACTING TEXAS EXCAVATION SAFETY SYSTEM (800-DIG-TESS) AND RELEVANT UTILITY COMPANIES 48 HOURS PRIOR TO LOCATING EXISTING UTILITIES OR CONSTRUCTION ACTIVITIES.
5. THE CONTRACTOR SHALL PROTECT ALL ADJACENT ON & OFF-SITE PAVING, UTILITIES, TREES AND OTHER EXISTING STRUCTURES FROM DAMAGE PRIOR TO & DURING CONSTRUCTION. ANY DAMAGE THAT OCCURS FROM CONSTRUCTION OPERATIONS SHALL BE RESTORED AT THE CONTRACTOR'S EXPENSE.
6. THE CONTRACTOR SHALL COMPLY WITH OSHA REGULATIONS AND STATE OF TEXAS LAWS CONCERNING EXCAVATION, EMISSIONS, TRENCHING, SHORING, AND SITE SAFETY.
7. THE CONTRACTOR SHALL SUBMIT A CONSTRUCTION SEQUENCE TO THE ENGINEER PRIOR TO BEGINNING WORK.
8. POSITIVE DRAINAGE MUST BE MAINTAINED FOR ALL DRAINAGE & CONVEYANCE SWALES, CULVERTS, AND CREEKS INCLUDING INTERMITTENT STREAMS AFFECTED BY CONSTRUCTION OPERATIONS. ANY WORK NECESSARY TO DAM OR DIVERT EXISTING DRAINAGE WAYS TO COMMENCE CONSTRUCTION SHALL BE CONSIDERED SUBSIDIARY.
9. ALL EXCAVATION IS UNCLASSIFIED AND SHALL INCLUDE ALL MATERIALS ENCOUNTERED TO INCLUDE BUT NOT BE LIMITED TO ROCK, RUBBLE, DEBRIS, TRASH, ETC. UNUSABLE EXCAVATED MATERIAL AND ALL WASTE RESULTING FROM SITE CLEARING AND GRUBBING SHALL BE DISPOSED OF OFF SITE AT THE CONTRACTOR'S EXPENSE. SPOILS MAY BE DISPOSED OF ON-SITE ONLY WITH PRIOR APPROVAL FROM THE ENGINEER AND ONLY IN LOCATIONS APPROVED BY THE ENGINEER.
10. AT SUBSTANTIAL COMPLETION, THE CONTRACTOR SHALL REMOVE ALL CONSTRUCTION DEBRIS, EXCESS MATERIAL, FORM-WORK, TRASH, EQUIPMENT, OR ANY OTHER SUPERFLUOUS OR WASTE MATERIAL FROM THE SITE, INCLUDING EROSION CONTROL DEVICES (SEE EROSION CONTROL AND SOIL MANAGEMENT NOTES).
11. THE CONTRACTOR SHALL BE RESPONSIBLE FOR COORDINATING WORK INVOLVING FRANCHISE UTILITIES WITH UTILITY OWNERS. ANY ELECTRIC UTILITY WORK OR POLE RELOCATION WILL BE COORDINATED WITH THE ONCOR REPRESENTATIVE: BAILEY BOWERS, (903.686.8288)
12. A TRAFFIC CONTROL PLAN (TCP) HAS NOT BEEN PROVIDED BY THE ENGINEER. SHOULD A TCP BE REQUIRED FOR THIS PROJECT THE CONTRACTOR SHALL BE RESPONSIBLE FOR SAID TRAFFIC CONTROL INCLUDING THE USE OF ALL TRAFFIC CONTROL DEVICES USED TO WARN MOTORISTS OF THE CONSTRUCTION ACTIVITY. ALL TRAFFIC CONTROL MUST CONFORM TO THE LATEST EDITION OF THE TEXAS MANUAL OF UNIFORM TRAFFIC CONTROL DEVICES FOR STREETS AND HIGHWAYS AS PUBLISHED BY THE TEXAS DEPARTMENT OF TRANSPORTATION.
13. THE CONTRACTOR IS RESPONSIBLE FOR OBTAINING ALL NECESSARY PERMITS AND APPROVALS PRIOR TO AND THROUGHOUT CONSTRUCTION.
14. IT IS THE CONTRACTOR'S RESPONSIBILITY TO MAINTAIN NEAT AND ACCURATE CONSTRUCTION RECORDS FOR THE OWNER USE. THE CONTRACTOR SHALL PROVIDE THE OWNER CLEAN AND ACCURATE FULL SIZE REPRODUCIBLE RECORD DRAWINGS WHICH CLEARLY DESCRIBE ALL CONSTRUCTION AND ANY DEVIATIONS FROM THE PLANS.
15. THE CONTRACTOR SHALL TAKE ALL AVAILABLE PRECAUTIONS TO CONTROL DUST. CONTRACTOR SHALL CONTROL DUST BY SPRINKLING WATER, OR BY OTHER MEANS THAT ARE APPROVED BY TPWD AND ENGINEER.
16. TPWD SHALL CONTRACT WITH OTHERS FOR ALL REQUIRED CONSTRUCTION SURVEYING, QUALITY CONTROL, AND MATERIALS TESTING. CONTRACTOR SHALL BE RESPONSIBLE FOR COORDINATING WITH ALL TESTING FIRMS.
17. ALL EFFORTS SHALL BE MADE TO AVOID DAMAGE TO EXISTING TREES THAT ARE TO REMAIN. TREES SHALL BE TRIMMED AND PAINTED ONLY IF NECESSARY FOR THE SAFE MANEUVERING OF CONSTRUCTION EQUIPMENT. CONTRACTOR SHALL REQUEST APPROVAL FROM THE OWNER FOR REMOVAL OF ANY TREES. WHEN EXCAVATING AROUND A TREE, THE ROOTS SHALL BE CLEAN CUT PRIOR TO ANY EXCAVATION WORK. DO NOT SNAG AND TEAR TREE ROOTS.
21. PRIOR TO THE START OF WORK THE CONTRACTOR SHALL LOCATE AND UNCOVER ALL UTILITY TIE-INS, CROSSINGS AND CONNECTIONS TO VERIFY ELEVATIONS. REPORT ANY DISCREPANCIES TO THE ENGINEER. CONTRACTOR SHALL INSTALL ALL EROSION CONTROL DEVICES AND TREE PROTECTION PRIOR TO SOIL DISTURBING ACTIVITIES.
22. EROSION CONTROL MEASURES MUST BE IN PLACE BEFORE BEGINNING SOIL DISTURBING ACTIVITIES. CONTRACTOR TO PROVIDE ADDITIONAL EROSION CONTROL AREAS ON SITE THAT MAY NEED TO BE DISTURBED FOR ANY LAY DOWN AREA, STAGING, PITS, ETC
23. THE CONTRACTOR SHALL SUBMIT ALL SHOP DRAWINGS AND SUBMITTALS REQUIRED TO BE SUBMITTED BY THE CONTRACT SPECIFICATIONS. ANY WORK PERFORMED OR MATERIALS USED THAT ARE REQUIRED TO BE SUBMITTED BUT HAVE NOT BEEN REVIEWED AND ACCEPTED BY THE OWNER'S REPRESENTATIVE SHALL NOT BE PAID FOR OR SHALL BE PAID FOR AT A REDUCED RATE. ALL SHOP DRAWINGS AND SUBMITTALS SHALL BE PROOFREAD AND REVIEWED BY THE GENERAL CONTRACTOR FOR APPROVAL PRIOR TO SUBMITTAL TO THE ENGINEER. SUBCONTRACTOR / GENERAL CONTRACTOR SHALL CLEARLY INDICATE, MARK, HIGHLIGHT, AND PROPERLY CLARIFY PRODUCTS TO BE CONSIDERED FOR APPROVAL. SUBMITTALS NOT PROOFREAD OR REVIEWED OR CLARIFIED PROPERLY SHALL BE RETURNED UNREVIEWED. CONTRACTOR SHALL RESUBMIT SHOP DRAWINGS AND ALLOW FOR SUITABLE REVIEW TIME. SUITABLE REVIEW TIME SHALL BE NO MORE TEN (10) WORKING DAYS.

## Demolition Plan Notes

1. EXISTING TOPOGRAPHIC SURVEY AND LOCATION OF PHYSICAL FEATURES WERE OBTAINED FROM A TOPOGRAPHIC SURVEY PERFORMED BY McKIM & CREED DATED AUGUST 2020.
2. NO DEMOLITION ACTIVITIES SHALL COMMENCE UNTIL ALL PERMITS ARE OBTAINED AND PERIMETER EROSION CONTROL MEASURES ARE IN PLACE.
3. CONTRACTOR IS RESPONSIBLE FOR VERIFYING THE LOCATION OF ALL UNDERGROUND UTILITIES WITHIN THE AREA OF CONSTRUCTION.
4. IT WILL BE THE RESPONSIBILITY OF THE CONTRACTOR TO PROTECT ALL MANHOLES, CLEANOUTS, VALVE BOXES, FIRE HYDRANTS, ETC., WITHIN THE AREA OF CONSTRUCTION.
5. EXISTING SANITARY SEWER, WATER UTILITY LINES AND RV DUMP STATION ARE TO REMAIN IN SERVICE AT ALL TIMES. CONTRACTOR TO MAKE PROVISIONS TO KEEP THESE UTILITIES IN SERVICE. ALL PROPOSED SHUT DOWNS OF UTILITIES MUST BE COORDINATED AND APPROVED IN WRITING BY OWNER.
6. ALL TRAFFIC CONTROL MEASURES, BARRICADES AND PROJECT SIGNS NEAR THE STREET SHALL CONFORM TO THE LATEST EDITION OF TEXAS DEPARTMENT OF TRANSPORTATION MANUAL OF UNIFORM TRAFFIC CONTROL DEVICES AND THE LOCAL GOVERNING AGENCY REQUIREMENTS.
7. PROVIDE EROSION AND SEDIMENTATION CONTROLS AS SHOWN ON THE DRAWINGS AND MAINTAIN FOR THE DURATION OF THE PROJECT. PROVIDE ROUTINE MAINTENANCE AS REQUIRED BY THE SWPPP PLAN TO MAINTAIN THE INTEGRITY OF CONTROLS AND PROTECTION MEASURES AND REMOVE ANY ACCUMULATIONS OF MUD, SILT AND DEBRIS, WHICH WOULD JEOPARDIZE THE INTEGRITY OF THE CONTROL MEASURES. REFER TO DRAWINGS FOR DETAILS.
8. CONTRACTOR SHALL EXERCISE CARE DURING OPERATIONS TO CONFINE DUST TO THE IMMEDIATE WORK AREA AND SHALL EMPLOY DUST CONTROL MEASURES TO ENSURE ADEQUATE DUST CONTROL THROUGHOUT DEMOLITION AND CONSTRUCTION OPERATIONS.
9. EXPOSED SUBGRADE BENEATH PAVED AREAS SHALL BE PROOF ROLLED TO DETECT WEAK SOIL SUPPORT AREAS. THESE AREAS WILL BE REMOVED AND REPLACED WITH SITE EXCAVATED MATERIALS OR IMPORTED MATERIALS HAVING THE SAME PROPERTIES AS SITE MATERIALS.
10. THE CONTRACTOR SHALL NOT DAMAGE ANY FENCES, DRIVES, PAVEMENT, UTILITIES OR OTHER EXISTING FACILITIES INTENDED TO REMAIN. DAMAGE TO ADJOINING PROPERTY OUTSIDE THE LIMITS OF DISTURBANCE OR OTHER ITEMS INTENDED TO REMAIN SHALL BE REPAIRED OR REPLACED AT THE EXPENSE OF THE CONTRACTOR.
11. THE CONTRACTOR SHALL COMPLY TO THE FULLEST EXTENT WITH ALL REGULATIONS GOVERNING AGENCIES REGARDING THE DEMOLITION, REMOVAL, TRANSPORTATION AND DISPOSAL OF ALL DEMOLITION DEBRIS.
12. THE CONTRACTOR SHALL REMOVE AND DISPOSAL OF ANY ON-SITE TRASH, DEBRIS, OR DEMOLITION MATERIALS. DISPOSAL OF ALL DEMOLITION MATERIALS OR PRE-EXISTING ON-SITE TRASH AND DEBRIS SHALL NOT BE ITEMIZED AND PAID FOR AS SEPARATE ITEMS BUT SHALL BE SUBSIDIARY TO THE CONTRACT PRICE.
13. THE CONTRACTOR SHALL ASSUME RESPONSIBILITY FOR THE PROTECTION OF ALL PROPERTY CORNER MONUMENTS, BENCHMARKS, CONTROL POINTS, ETC, AND SHALL HAVE, AT HIS EXPENSE, ALL CORNER MONUMENTS REPLACED WHICH ARE DISTURBED BY CONSTRUCTION ACTIVITIES.
14. THE CONTRACTOR SHALL BE RESPONSIBLE FOR COORDINATING DISCONNECTION OF ALL UTILITIES SERVING THE EXISTING SITE WITH THE APPROPRIATE UTILITY COMPANY, AND SHALL OBTAIN APPROVAL FROM SAME TO COMMENCE DEMOLITION ACTIVITIES.
15. THE CONTRACTOR SHALL LOCATE AND REMOVE ALL UNDERGROUND UTILITY PIPING, CONDUIT, AND CABLES, REGARDLESS OF DEPTH, IN THE AREA OF THE PROPOSED BUILDING(S) FOUNDATIONS. (UNLESS NOTED OTHERWISE)
16. THE CONTRACTOR SHALL BE RESPONSIBLE FOR PLUGGING, CAPPING, OR OTHERWISE TERMINATING UTILITY SERVICE LINES AT THE PROPERTY LINE; OR AT THE UTILITY MAIN AS REQUIRED BY THE UTILITY OWNER.
17. REFER TO LANDSCAPE DRAWINGS FOR TREE DEMOLITION AND PROTECTION.
18. REFER TO DEMOLITION ITEMS WITHIN OTHER DISCIPLINES' DOCUMENTS FOR COORDINATION NOTES.

## Grading Plan Notes:

1. POSITIVE DRAINAGE SHALL BE MAINTAINED ON ALL SURFACE AREAS WITHIN THE DISTURBED AREAS OF THIS PROJECT. DRAINAGE SHALL BE DIRECTED AWAY FROM ALL BUILDING FOUNDATIONS. CONTRACTOR SHOULD TAKE PRECAUTIONS NOT TO ALLOW ANY PONDING OF WATER.
2. NO ABRUPT CHANGE OF GRADE SHALL OCCUR IN DRIVEWAYS, PARKING AREAS OR SIDEWALKS.
3. UTILITIES SHOWN ON THE PLANS ARE FROM THE BEST INFORMATION SOURCES AVAILABLE AT THE TIME OF DESIGN BUT MAY NOT REPRESENT ALL EXISTING UTILITIES ON SITE. THE CONTRACTOR WILL BE RESPONSIBLE FOR DETERMINING THE EXACT LOCATION OF ALL UTILITIES AND DRAINAGE STRUCTURES WHETHER SHOWN ON THE PLANS OR NOT. THE CONTRACTOR SHALL UNCOVER EXISTING UTILITIES PRIOR TO CONSTRUCTION TO VERIFY SIZE, TYPE, GRADE AND LOCATION. THE CONTRACTOR SHALL NOTIFY THE ENGINEER IMMEDIATELY OF ANY DEVIATIONS FROM THE PLANS PRIOR TO BEGINNING CONSTRUCTION. ANY DAMAGE TO EXISTING UTILITIES, WHETHER SHOWN ON THE PLAN OR NOT, SHALL BE THE CONTRACTOR'S RESPONSIBILITY TO REPAIR, AT HIS OWN EXPENSE.
4. CONTRACTOR SHALL IMMEDIATELY NOTIFY THE ENGINEER OF ANY QUESTIONS THAT MAY ARISE CONCERNING THE INTENT, PLACEMENT, OR LIMITS OF DIMENSIONS OR GRADES NECESSARY FOR CONSTRUCTION OF THIS PROJECT.
5. ALL CONSTRUCTION AREAS WITHIN THE SITE SHALL BE STRIPPED OF VEGETATION AND LOOSE TOPSOIL. ANY POCKETS OF DEBRIS ENCOUNTERED SHOULD ALSO BE REMOVED.
6. REFER TO THE MOST RECENT GEOTECHNICAL REPORT FOR FILL COMPACTION AND MOISTURE CONTENT REQUIREMENTS.
7. CONTRACTOR SHALL TAKE ALL NECESSARY PRECAUTIONS (USE OF SILT FENCES, ETC.) TO KEEP DRAINAGE AND SILT FROM WASHING OFFSITE AND ONTO ADJACENT PROPERTY OR CROSSING ADJACENT STREETS. CONTRACTOR SHALL IMMEDIATELY REMOVE SILT/DEBRIS THAT WASHES OFFSITE OR INTO EXISTING STORM DRAIN SYSTEMS.
8. IT WILL BE THE RESPONSIBILITY OF THE CONTRACTOR TO PROTECT ALL MANHOLES, CLEANOUTS, VALVE BOXES, FIRE HYDRANTS, ETC. WITHIN THE AREA OF CONSTRUCTION. THEY MUST BE ADJUSTED TO PROPERTY LINE AND GRADE BY THE CONTRACTOR PRIOR TO AND AFTER THE PLACEMENT OF PAVING AND GRADING AT NO ADDITIONAL COST TO THE OWNER.
9. SIDEWALKS SHALL HAVE A RUNNING SLOPE NOT GREATER THAN 5% AND A CROSS SLOPE NOT GREATER THAN 2%, UNLESS OTHERWISE NOTED.

## Paving Plan Notes:

1. UNLESS OTHERWISE NOTED, REFER TO TEXAS PARKS AND WILDLIFE DEPARTMENT DESIGN STANDARDS FOR ROADS AND PARKING. ALL SPECIFICATION DETAILS OR THE MOST RECENT PROVIDED GEOTECHNICAL REPORT FOR SUBGRADE COMPACTION AND MOISTURE CONTENT REQUIREMENTS WILL BE FOLLOWED FOR THIS PROJECT.
2. REFER TO CIVIL PAVING PLANS AND DETAILS FOR PAVEMENT THICKNESS AND STRENGTH REQUIREMENTS.
3. INSTALLATION AND PLACEMENT OF IRRIGATION SLEEVES AND UTILITY CONDUITS SHALL BE IN ACCORDANCE TO THE ARCHITECT'S LANDSCAPE PLANS AND/OR MEP PLANS. NEW IRRIGATION SLEEVES SHOWN HEREON ARE FOR REFERENCE ONLY AND SHOULD BE CONSIDERED APPROXIMATE. (REFER TO LANDSCAPE DRAWINGS FOR EXACT LOCATIONS.)
4. ALL PARKING STRIPING SHALL BE 4" WIDE UNLESS OTHERWISE NOTED.
5. INSTALL ACCESSIBLE PARKING STALLS, AISLES, SYMBOLS, SIGNAGE AND WHEELSTOPS IN ACCORDANCE WITH ADA/TAS STANDARDS AND TECHNICAL BULLETIN 68.104. STRIPING WILL BE COLORED PER ADA/TAS OR PARK APPROVED COLOR PAINT.
6. SIDEWALKS SHALL HAVE A RUNNING SLOPE NOT GREATER THAN 5% AND A CROSS SLOPE NOT GREATER THAN 2%, UNLESS OTHERWISE NOTED.
7. SAWED JOINTS SHALL BE SPACED AT INTERVALS OF 15 FEET MAXIMUM AND AT ALL RADIUS RETURNS. SAWED JOINTS SHALL BE PERPENDICULAR TO ALL CURVES. JOINTS SHALL BE SAWED WITHIN 12 HOURS AFTER CONCRETE IS POURED.
8. SAWED JOINTS SHALL MATCH THE EXISTING PAVEMENT JOINT PATTERN WHERE NEW PAVEMENT IS CONSTRUCTED ADJACENT TO EXISTING CONCRETE PAVEMENT.
9. ALL MANHOLES, INLETS, LIGHT BASES, AND OTHER STRUCTURES SHALL BE ISOLATED FROM THE NEW PAVEMENT WITH PREFORMED ASPHALTIC EXPANSION MATERIAL.
10. ADJUST EXISTING TOP OF MANHOLE RIMS AND EXISTING WATERLINE VALVE BOXES TO FINISHED GRADE ELEVATIONS.
11. FOR PAVING PATTERNS, FINISHES AND MATERIALS REFER TO ARCHITECTURAL OR LANDSCAPE DRAWINGS.
12. NEW IRRIGATION FACILITIES ARE NOT SHOWN ON THE DRAWINGS HEREON. REFER TO LANDSCAPE DRAWINGS FOR EXACT LOCATIONS OF PROPOSED IRRIGATION SERVICES.
13. CARE SHALL BE TAKEN NOT TO PLACE CONCRETE DURING INCLEMENT WEATHER. CONCRETE AGGREGATE THAT HAS BEEN EXPOSED DUE TO RAINFALL BEFORE THE CONCRETE HAS SET-UP SHALL NOT BE ACCEPTED AND MUST BE REPLACED.
14. EXPOSED SUBGRADE BENEATH PAVED AREAS SHALL BE PROOF ROLLED TO DETECT WEAK SOIL SUPPORT AREAS. WEAK AREAS WILL BE REMOVED AND REPLACED WITH SITE EXCAVATED MATERIALS OR IMPORTED MATERIALS HAVING THE SAME PROPERTIES AS SITE MATERIALS.

## Striping and Accessible Notes:

1. ALL PARKING AND ACCESSIBLE STRIPING SHALL BE WHITE 4" SOLID LINES. UNLESS NOTED OTHERWISE
2. ACCESSIBLE STALL OR AISLE MARKINGS AND IDENTIFICATION WILL BE ADDRESSED BY THE TAS/ADA REGULATIONS, OR STATE PARK DETAILS UNLESS NOTED OTHERWISE.
3. PAVEMENT MARKING SYMBOL OF ACCESSIBILITY SHALL BE PLACED TOWARD THE FAR END OF THE PARKING STALL SO AS TO BE VISIBLE TO MOTORISTS IN THE TRAVEL LANE. SYMBOL OF ACCESSIBILITY MAY BE PAINTED OR A PREFABRICATED MATERIAL AND SHALL BE 30"x30" MINIMUM. COLOR WILL BE PER LATEST ADA/TAS STANDARDS.
4. ALL ACCESSIBLE STALLS SHALL BE 8 FEET WIDE MINIMUM AND BE ACCOMPANIED BY AN ACCESS AISLE THAT SHALL BE 5 FEET WIDE MINIMUM. VAN ACCESSIBLE PARKING SHALL BE A TOTAL OF 16 FEET WIDE MINIMUM WHEN INCLUDING THE ADJACENT ACCESS AISLE. (REFER TO TAS BULLETIN 68.104 FOR LATEST REQUIREMENTS)
5. ALL ACCESSIBLE STALLS SHALL HAVE AN INTERNATIONAL APPROVED ACCESSIBILITY SIGN MOUNTED AT A MINIMUM HEIGHT OF 60" ABOVE THE SURFACE OF THE FINISHED GRADE. IN ADDITION TO THIS SIGN, EACH VAN ACCESSIBLE STALL SIGN SHALL CONTAIN ADDITIONAL PLACARD SIGNS STATING "VAN ACCESSIBLE" & "VIOLATORS SUBJECT TO FINE AND TOWING".
6. POST MOUNTED SIGNS SHALL BE PLACED APPROXIMATELY 1 FOOT BEHIND THE CURB OR SIDEWALK OR AS DIRECTED BY TPWD. WHEEL STOPS WILL BE PLACED APPROXIMATELY 2 FEET BEHIND FACE OF CURB AT CENTER OF THE PARKING STALL. SALVAGE EXISTING SIGNS AND WHEEL STOPS FOR RE-USE.
7. ACCESSIBLE STALLS AND AISLES MUST NOT EXCEED 2% (1:48) IN ANY DIRECTION. CURB RAMPS MUST NOT EXCEED A LONGITUDINAL SLOPE OF 1:12 OR A CROSS SLOPE OF 1:48. ANY RAMPS EXCEEDING THESE SLOPES MUST BE REMOVED AND RE-POURED. USE CARE DURING PAVING OPERATIONS.
8. ALL CROSSWALK STRIPING SHALL BE WHITE, 12 to 24 INCHES WIDE AND SPACED 24 to 48 INCHES APART. THE CROSSWALK STRIPING SHALL BE SPACED TO AVOID WHEEL PATHS. CROSSWALK SHALL NOT EXCEED A MAXIMUM CROSS SLOPE OF 1:48.
9. CROSSHATCHING SHOWN ON THE PLANS SHALL BE 24" WIDE AND TYPICALLY SPACED 20 FEET APART. COLOR SHALL BE PER DETAILS UNLESS NOTED OTHERWISE.

## Dimension Control Notes:

1. EXISTING TOPOGRAPHIC SURVEY AND LOCATION OF PHYSICAL FEATURES WERE OBTAINED FROM A TOPOGRAPHIC SURVEY PERFORMED BY McKIM & CREED DATED AUGUST 2020.
2. CONTRACTOR SHALL IMMEDIATELY NOTIFY THE ENGINEER OF ANY QUESTIONS THAT MAY ARISE CONCERNING THE INTENT, PLACEMENT, OR LIMITS OF DIMENSIONS OR GRADES NECESSARY FOR CONSTRUCTION OF THIS PROJECT.
3. CONTRACTOR SHALL BE RESPONSIBLE FOR FURNISHING AND MAINTAINING ALL SIGNS, BARRICADES, AND LIGHTING OR WARNING DEVICE(S) USED/REQUIRED WITH THIS WORK.
4. ALL UNLABELED CURB RADII SHALL BE 2.0 FEET TYPICAL.
5. ALL DIMENSIONS ARE FROM EDGE OF PAVEMENT OR FACE OF CURB UNLESS OTHERWISE NOTED.
6. ALL BUILDING DIMENSIONS ARE TO FACE OF BUILDING. REFER TO ARCHITECTURAL PLANS FOR BUILDING DIMENSION INFORMATION.
7. REFER TO LANDSCAPE ARCHITECT PLANS FOR DETAILS AND DIMENSIONS OF LANDSCAPE HARDSCAPE AREAS.

## Drainage Plan Notes:

1. EXISTING TOPOGRAPHIC SURVEY AND LOCATION OF PHYSICAL FEATURES WERE OBTAINED FROM A TOPOGRAPHIC SURVEY PERFORMED BY McKIM & CREED DATED AUGUST 2020.
2. THE HORIZONTAL AND VERTICAL LOCATION OF EXISTING SUBSURFACE UTILITIES HAVE BEEN DETERMINED FROM DATA RECORDED BY OTHERS AND THE BEST AVAILABLE RECORDS AT THE TIME OF THE SURVEY. FIELD DATA IS LIMITED TO THAT WHICH IS VISIBLE AND CAN BE MEASURED. THIS DOES NOT PRECLUDE THE EXISTENCE OF OTHER UNDERGROUND ITEMS. THE COMPLETENESS AND/OR ACCURACY OF THESE RECORDS CANNOT BE GUARANTEED, EXCEPT INSOFAR AS THEY CAN BE VERIFIED BY THE FIELD MEASUREMENT. IT SHALL BE THE RESPONSIBILITY OF THE CONTRACTOR TO UNCOVER AND VERIFY THE ACTUAL DEPTH AND CONDITION OF ALL AFFECTED UNDERGROUND UTILITIES WITHIN THE AREA OF CONSTRUCTION PRIOR TO BEGINNING THE ACTUAL WORK.
3. REFER TO THE MOST RECENT GEOTECHNICAL REPORT FOR REQUIREMENTS REGARDING FILL COMPACTION AND MOISTURE CONTENT.
4. UNLESS NOTED, STORM DRAIN LINES MAY BE MADE OF THE FOLLOWING MATERIALS:
   A. PIPE SIZE SMALLER THAN 12 INCH SHALL BE PVC
   B. PIPE SIZE 12 INCH OR GREATER SHALL BE RCP.
   C. RCP SHALL BE C-76, CLASS III
5. ALL PIPE SHALL BE INSTALLED PER MANUFACTURER'S SPECIFICATIONS.
6. UNLESS NOTED, CATCH BASINS, CURB INLETS AND HEADWALLS SHALL BE PRECAST, SIZED AS SHOWN.

## Utility Plan Notes:

1. THE HORIZONTAL AND VERTICAL LOCATION OF EXISTING SUBSURFACE UTILITIES HAVE BEEN DETERMINED FROM DATA RECORDED BY OTHERS AND THE BEST INFORMATION SOURCES AVAILABLE AT THE TIME OF DESIGN. FIELD DATA IS LIMITED TO THAT WHICH IS VISIBLE AND CAN BE MEASURED. THIS DOES NOT PRECLUDE THE EXISTENCE OF OTHER UNDERGROUND ITEMS. THE COMPLETENESS AND/OR ACCURACY OF THESE RECORDS CANNOT BE GUARANTEED, EXCEPT INSOFAR AS THEY CAN BE VERIFIED BY FIELD MEASUREMENT. IT SHALL BE THE RESPONSIBILITY OF THE CONTRACTOR TO UNCOVER AND VERIFY THE ACTUAL DEPTH AND CONDITION OF ALL AFFECTED UNDERGROUND UTILITIES WITHIN THE AREA OF CONSTRUCTION PRIOR TO BEGINNING THE ACTUAL WORK.
2. REMOVE FROM THE SITE ALL SURFACE FEATURES AND UTILITIES INDICATED ON THE DRAWINGS TO BE DEMOLISHED OR REMOVED. BACKFILL TRENCHES EXCAVATED FOR UTILITY REMOVAL.
3. ALL CONSTRUCTION OCCURRING IN THE MAIN DRIVE WILL CONFORM TO TEXAS PARKS AND WILDLIFE DEPARTMENT DESIGN STANDARDS. (LATEST VERSION)
4. THE CONTRACTOR IS RESPONSIBLE FOR ANY AND ALL DAMAGE TO EXISTING UTILITIES THAT ARE TO REMAIN. CONTRACTOR SHALL REPAIR OR REPLACE ANY AND ALL DAMAGED UTILITIES TO THEIR ORIGINAL CONDITION AT NO COST TO THE OWNER.
5. ALL WATER AND SANITARY SEWER PIPES MUST BE INSTALLED AND TESTED IN ACCORDANCE WITH TEXAS COMMISSION ON ENVIRONMENTAL QUALITY (TCEQ) REQUIREMENTS.
6. CONTRACTOR SHALL VERIFY ALL EXISTING SANITARY SEWER FLOW LINES BEFORE BEGINNING CONSTRUCTION.
7. ALL SANITARY SEWER PIPING SHALL BE SDR 26 RATED AT MINIMUM. AND ALL SEWER SERVICE LINES TO BUILDINGS SHALL BE PROVIDED WITH CLEANOUTS NOT MORE THAN 100 FEET APART, EXCEPT IN THE AREA TO BE INSTALLED BY PIPE BURSTING.
8. ALL MANHOLES, FIRE HYDRANTS, VALVE BOXES, ETC LOCATED IN LANDSCAPE AREAS SHALL HAVE A 12" MOW STRIP AROUND THEM, UNLESS NOTED OTHERWISE.
9. WHEN WATER LINES ARE INSTALLED IN THE VICINITY OF SEWER MAINS, SUCH INSTALLATION SHALL BE IN STRICT ACCORDANCE WITH THE TEXAS DEPARTMENT OF HEALTH "RULES AND REGULATIONS FOR PUBLIC WATER SYSTEMS" (LATEST EDITION)
10. ALL DOMESTIC WATER SUPPLY AND FIRE PROTECTION MAINS SHALL RECEIVE CONCRETE THRUST BLOCKING AND JOINT RESTRAINTS PER THE DETAIL SHEETS.
11. THE CONTRACTOR SHALL NOTIFY ALL AFFECTED UTILITY COMPANIES OR AGENCIES IN WRITING AT LEAST 1 WEEK PRIOR TO BEGINNING CONSTRUCTION. THE CONTRACTOR SHALL BE RESPONSIBLE FOR AND WILL MAKE ARRANGEMENTS FOR ANY AND ALL TEMPORARY UTILITIES, PERMITS, AND AGREEMENTS.
12. THE CONTRACTOR SHALL PROTECT ALL UTILITIES DURING THE CONSTRUCTION OF THIS PROJECT. ALL MANHOLES, CLEANOUTS, WATER VALVES, FIRE HYDRANTS, AND OTHER APPURTENANCES MUST BE ADJUSTED TO PROPER LINE AND GRADE BEFORE FINAL ACCEPTANCE BY THE CITY. THE CONTRACTOR SHALL GIVE THE STATE PARK AND CITY (IF APPLICABLE), AT LEAST FORTY-EIGHT (48) HOURS PRIOR WRITTEN NOTICE.
13. THE CONTRACTOR SHALL SALVAGE ALL EXISTING STATE PARK UTILITY APPURTENANCES SUCH AS SIGNS, VALVES, FIRE HYDRANTS, ETC. IN ACCORDANCE WITH STATE PARK REQUIREMENTS AND RETURN THE SAVAGED EQUIPMENT TO THE PARK.
14. TESTING OF UTILITY TRENCH BACKFILL COMPACTION SHALL BE AT 75' INTERVALS AND EACH LIFT'S BACKFILL. BACKFILL SHALL BE PROCESSED SUCH THAT NO DIRT CLODS ARE IN EXCESS OF 4" DIAMETER. ALL SANITARY SEWER LINES AND STORM SEWER LINES SHALL BE TV TESTED AT THE COMPLETION OF THE PROJECT (IN ADDITION TO MINIMUM CODE OR OTHER REQUIREMENTS) TO CHECK FOR DAMAGE CAUSED BY OTHER TRADES, UTILITY CONFLICTS, TRENCH SETTLEMENT, ETC. THE COST OF SUCH SHALL BE INCLUDED IN THE CONTRACTORS BASE PRICE.
15. THE CONTRACTOR SHALL, PROVIDE ALL NECESSARY FITTINGS AND APPURTENANCES REQUIRED TO COMPLETE ALL CONNECTIONS, RESOLVE UTILITY CONFLICTS AND OTHER INCIDENTAL UTILITY WORK SHOWN ON THE PLANS OR CONTAINED IN THE SPECIFICATIONS OR REQUIRED BY GOVERNING AGENCIES TO INCLUDE, BUT NOT LIMITED TO TEMPORARY SERVICES: VALVES, BOXES, METERS, BACKFLOW PREVENTORS, FIRE DEPARTMENT CONNECTIONS, ETC. INCLUDING THE REPAIR OR REPLACEMENT OF ANY EXISTING IRRIGATION SYSTEM.

## Erosion Control Plan Notes:

1. THE CONTRACTOR SHALL COMPLY WITH FEDERAL, STATE AND LOCAL REGULATIONS REGARDING STORM WATER DISCHARGE AND EROSION & SEDIMENT CONTROL.
2. FOR ALL EROSION CONTROL IN THE MAIN ROADWAY, CONTRACTOR SHALL MAKE REFERENCE TO THE TEXAS PARKS AND WILDLIFE DEPARTMENT DESIGN STANDARDS, AND/OR CONSTRUCTION MANUAL FOR ACCEPTABLE CONSTRUCTION AND EROSION CONTROL GUIDELINES AND DETAILS NOT PROVIDED.
3. EROSION CONTROL MEASURES MUST BE IN PLACE BEFORE BEGINNING SOIL DISTURBING ACTIVITIES. CONTRACTOR TO PROVIDE ADDITIONAL EROSION CONTROL AREAS ON SITE THAT MAY NEED TO BE DISTURBED FOR ANY LAY DOWN AREA, STAGING, PITS, ETC...
4. REFER TO SHEET C702 FOR ADDITIONAL EROSION CONTROL INFORMATION, NOTES AND DETAILS.
5. CONTRACTOR SHALL ASSUME ALL RESPONSIBILITY FOR COMPLIANCE WITH ALL TCEQ STORMWATER REQUIREMENTS FOR THE REMOTE SITE. IF AT ANY TIME THE AREA OF DISTURBED AREA EQUALS TO OR IS GREATER THEN ONE (1) ACRE, THE CONTRACTOR MUST PROVIDE A STORM WATER POLLUTION PREVENTION PLAN (SWPPP) AND ADHERE TO ALL REQUIREMENTS SET FORTH IN THE SWPPP AND TPDES GERNERAL PERMIT.

01/22/2021

STATE OF TEXAS
DARIN JENNINGS
82476
LICENSED PROFESSIONAL ENGINEER

shaping the built environment
JQ Infrastructure
JQ INFRASTRUCTURE, LLC
100 GLASS STREET, SUITE 201 DALLAS, TEXAS 75207
972.392.7340
PROJECT NO: 4200137 TBPE FIRM F-7986


TEXAS PARKS & WILDLIFE

GSBS
7291 GLENVIEW DRIVE
FORT WORTH, TX 76180
P 817.589.1722
GSBSARCHITECTS.COM
REGISTRATION NO. BR2865


EISENHOWER STATE PARK
RESTROOM REPLACEMENT
PROJECT NUMBER: 1210136

DATE: 2021-01-22
DESIGNED BY: NP
DRAWN BY: AB
REVIEWED BY: DJ
REVISED:
REVISED:
REVISED:

SHEET TITLE
CIVIL GENERAL NOTES

SHEET NAME
C101

GRAPHIC SCALE

20 0 10 20 40

1 inch = 20 ft.

## Legend

- CONCRETE PAVEMENT TO BE REMOVED
- ASPHALT PAVEMENT TO BE REMOVED
- UTILITY LINE TO BE REMOVED
- FULL DEPTH SAWCUT [APPROXIMATE LOCATION]
- EXISTING TREE TO BE REMOVED (REFER TO LANDSCAPE DRAWINGS FOR ADDITIONAL DEMO INFORMATION)
- 478 — EXISTING CONTOUR AND ELEVATION
- WM — WATER METER
- WV — WATER VALVE
- LP — LIGHT STANDARD
- HYD — FIRE HYDRANT
- CO — CLEANOUT
- GM — GAS METER
- GAS — EXISTING GAS
- WATER VAULT
- W — EXISTING WATER
- S — SANITARY SEWER MANHOLE
- SS — EXISTING SANITARY SEWER
- SW — STORM SEWER MANHOLE
- EXISTING STORM SEWER
- O/H — OVERHEAD ELECTRIC LINE
- EXISTING POWER POLE
- EXTENTS OF UTILITY REMOVAL
- LIMITS OF CONSTRUCTION

## See Drawing C101 for Sheet Notes

** INSTALL TREE PROTECTION AND EROSION CONTROL MEASURES BEFORE BEGINNING CONSTRUCTION WORK. SEE CIVIL NOTES ON C101 AND REFERENCE LANDSCAPE DRAWINGS FOR DETAILS ON TREE PROTECTION.

## Keynotes

1. EXISTING BUILDING STRUCTURE TO BE REMOVED AND REPLACED. (REFERENCE ARCHITECT AND STRUCTURAL FOR PROPOSED BUILDING)
2. CONTRACTOR TO PROTECT AND PRESERVE EXISTING UTILITY.
3. EXISTING STRUCTURE AND ADJACENT PAVEMENT TO BE MODIFIED AS NEEDED FOR NEW 6" SANITARY SEWER LINE INSTALLATION.
4. ONCOR TO REMOVE EXISTING UTILITY AND/OR UTILITY STRUCTURE
5. REMOVE PROPANE GAS TANK, ADJACENT GAS LINE, SUPPORT SLAB AND BOLLARD PROTECTION.
6. EXISTING RV DUMP STATION TO REMAIN IN SERVICE DURING CONSTRUCTION UNLESS APPROVED IN WRITING BY TPWD. CONTRACTOR TO PROTECT ALL EXISTING STRUCTURES & CONNECTIONS.

BENCHMARKS & CONTROL POINTS

CONTROL POINT #1: - MAG NAIL (SURFACE)
NORTHING: 7,349,035.722 EASTING: 2,545,584.371 ELEV. = 695.95'

CONTROL POINT #2: - MAG NAIL (SURFACE)
NORTHING: 7,349,351.350 EASTING: 2,545,648.776 ELEV. = 685.84'

CONTROL POINT #3: - MAG NAIL (SURFACE)
NORTHING: 7,349,231.892 EASTING: 2,545,493.316 ELEV. = 685.51'

01/22/2021

STATE OF TEXAS
DARIN JENNINGS
82478
LICENSED PROFESSIONAL ENGINEER

shaping the built environment

JQ INFRASTRUCTURE, LLC
100 GLASS STREET, SUITE 201
972.392.7340
DALLAS, TEXAS 75207
PROJECT NO. 4200137
TBPE FIRM F-7986

TEXAS PARKS & WILDLIFE

GSBS ARCHITECTS
7291 GLENVIEW DRIVE
FORT WORTH, TX 76180
817.737.2272
GSBSARCHITECTS.COM
REGISTRATION NO. BR2895

# EISENHOWER STATE PARK

**RESTROOM REPLACEMENT**

PROJECT NUMBER: 1210136

DATE: 2021-01-22
DESIGNED BY: NP
DRAWN BY: AB
REVIEWED BY: DJ
REVISED:
REVISED:
REVISED:

**SHEET TITLE**
DEMOLITION PLAN

SHEET NAME
**C201**

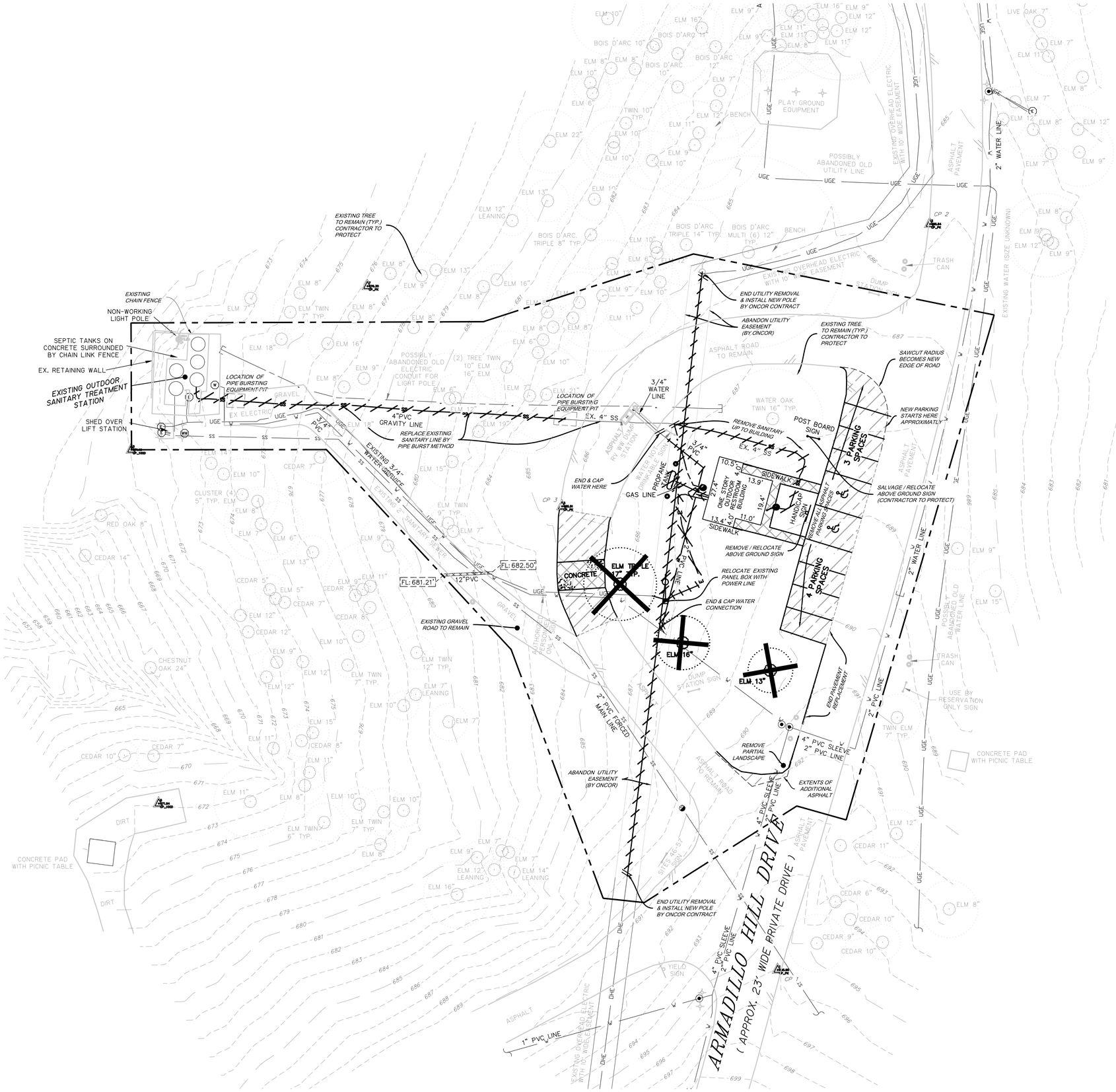


GRAPHIC SCALE

20 0 10 20 40

1 inch = 20 ft.

## Legend

- PAVEMENT TO BE REMOVED & REPLACED FOR UTILITY REPAIR OR CONNECTION.
- CUT & PLUG/CAP EXISTING UTILITY
- UTILITY LINE TO BE REMOVED
- FULL DEPTH SAWCUT [APPROXIMATE LOCATION]
- EXISTING TREE TO BE REMOVED (REFER TO LANDSCAPE DRAWINGS FOR ADDITIONAL DEMO INFORMATION)
- 478 — EXISTING CONTOUR AND ELEVATION
- WM — WATER METER
- WV — WATER VALVE
- LP — LIGHT STANDARD
- HYD — FIRE HYDRANT
- CO — CLEANOUT
- GM — GAS METER
- GAS — EXISTING GAS
- WATER VAULT
- W — EXISTING WATER
- S — SANITARY SEWER MANHOLE
- SS — EXISTING SANITARY SEWER
- SW — STORM SEWER MANHOLE
- EXISTING STORM SEWER
- O/H — OVERHEAD ELECTRIC LINE
- EXISTING POWER POLE
- EXTENTS OF UTILITY REMOVAL
- LIMITS OF CONSTRUCTION

## See Drawing C101 for Sheet Notes

## Keynotes

1. REMOVE EXISTING WATER VAULT, METERS & CONNECTIONS. CUT AND PLUG SERVICE AS CLOSE TO THE MAIN AS POSSIBLE.
2. PROPOSED PUBLIC UTILITY CONNECTION (REF. SHEET C8.0)
3. END UTILITY REMOVAL AT EXISTING UTILITY STRUCTURE.
4. EXISTING UTILITY STRUCTURE TO BE REMOVED.

BENCHMARKS & CONTROL POINTS

CONTROL POINT #1: - MAG NAIL (SURFACE)
NORTHING: 7,349,035.722 EASTING: 2,545,584.371 ELEV. = 695.95'

CONTROL POINT #2: - MAG NAIL (SURFACE)
NORTHING: 7,349,351.350 EASTING: 2,545,648.776 ELEV. = 685.84'

CONTROL POINT #3: - MAG NAIL (SURFACE)
NORTHING: 7,349,231.892 EASTING: 2,545,493.116 ELEV. = 685.51'

01/22/2021

STATE OF TEXAS — DARIN JENNINGS — 82478 — LICENSED PROFESSIONAL ENGINEER

shaping the built environment

JQ INFRASTRUCTURE, LLC
100 GLASS STREET, SUITE 201 DALLAS, TEXAS 75207
972.392.7340
PROJECT NO. 4200137 TBPE FIRM F-7986

TEXAS PARKS & WILDLIFE

GSBS ARCHITECTS
7291 GLENVIEW DRIVE
FORT WORTH, TX 76180
817.737.2777
GSBSARCHITECTS.COM
REGISTRATION NO. BR2895

# EISENHOWER STATE PARK

RESTROOM REPLACEMENT
PROJECT NUMBER: 1210136

DATE: 2021-01-22
DESIGNED BY: NP
DRAWN BY: AB
REVIEWED BY: DJ
REVISED:
REVISED:
REVISED:

SHEET TITLE
UTILITY DEMOLITION PLAN

SHEET NAME
C202

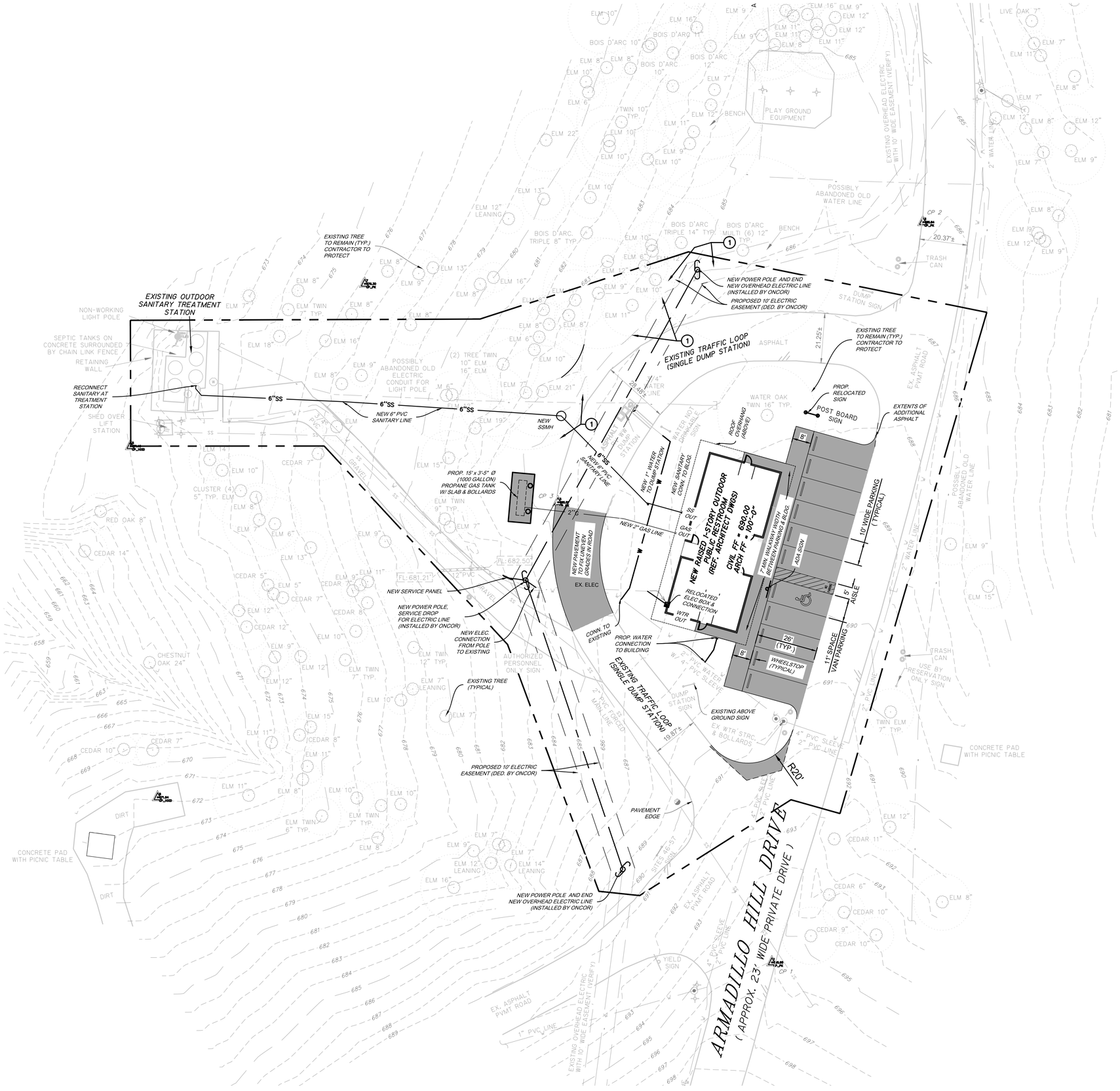


GRAPHIC SCALE

20 0 10 20 40

1 inch = 20 ft.

## Site Plan Legend

- PROPOSED PAVEMENT
- PROPOSED BUILDING
- EXISTING BUILDING
- PROPOSED CURB (6" HIGH)
- LIMITS OF CONSTRUCTION
- DEDICATED EASEMENT LINE
- FULL DEPTH SAWCUT
- EXISTING / PROPOSED SIGN
- EXISTING TREE TO REMAIN (REFER TO LANDSCAPE DRAWINGS FOR ADDITIONAL INFORMATION)
- 478 — EXISTING CONTOUR AND ELEVATION
- WM — WATER METER
- WV — WATER VALVE
- LP — LIGHT STANDARD
- HYD — FIRE HYDRANT
- CO — CLEANOUT
- GM — GAS METER
- GAS — EXISTING GAS
- WATER VAULT
- W — EXISTING WATER
- S — SANITARY SEWER MANHOLE
- SS — EXISTING SANITARY SEWER
- SW — STORM SEWER MANHOLE
- EXISTING STORM SEWER
- O/H — OVERHEAD ELECTRIC LINE
- EXISTING POWER POLE

## See Drawing C101 for Sheet Notes

** INSTALL TREE PROTECTION AND EROSION CONTROL MEASURES BEFORE BEGINNING CONSTRUCTION WORK. SEE CIVIL NOTES ON C101, REFERENCE LANDSCAPE DRAWINGS FOR DETAILS ON TREE PROTECTION.

## Keynotes

1. CONTRACTOR TO COORDINATE TREE OVERHANG ABOVE PROPOSED UTILITIES, OVER PROPOSED FRANCHISE EASEMENT AND LANDSCAPE IMPROVEMENTS.

*BENCHMARKS & CONTROL POINTS*

CONTROL POINT *1: - MAG NAIL (SURFACE)
NORTHING: 7,349,035.722 EASTING: 2,545,584.371 ELEV. - 695.95'

CONTROL POINT *2: - MAG NAIL (SURFACE)
NORTHING: 7,349,351.350 EASTING: 2,545,648.776 ELEV. - 685.84'

CONTROL POINT *3: - MAG NAIL (SURFACE)
NORTHING: 7,349,231.892 EASTING: 2,545,493.116 ELEV. - 685.51'

01/22/2021

STATE OF TEXAS
DARIN JENNINGS
82476
LICENSED
PROFESSIONAL ENGINEER

shaping the built environment

JQ INFRASTRUCTURE, LLC
100 GLASS STREET, SUITE 201
972.392.7340
DALLAS, TEXAS 75207
PROJECT NO: 4200137
TBPE FIRM F-7986

TEXAS PARKS & WILDLIFE

GSBS ARCHITECTS
7291 GLENVIEW DRIVE
FORT WORTH, TX 76180
817.332.7122
GSBSARCHITECTS.COM
REGISTRATION NO. BR2895

# EISENHOWER STATE PARK

**RESTROOM REPLACEMENT**

PROJECT NUMBER: 1210136

DATE: 2021-01-22
DESIGNED BY: NP
DRAWN BY: AB
REVIEWED BY: DJ
REVISED:
REVISED:
REVISED:

**SHEET TITLE**
SITE PLAN

SHEET NAME
**C301**

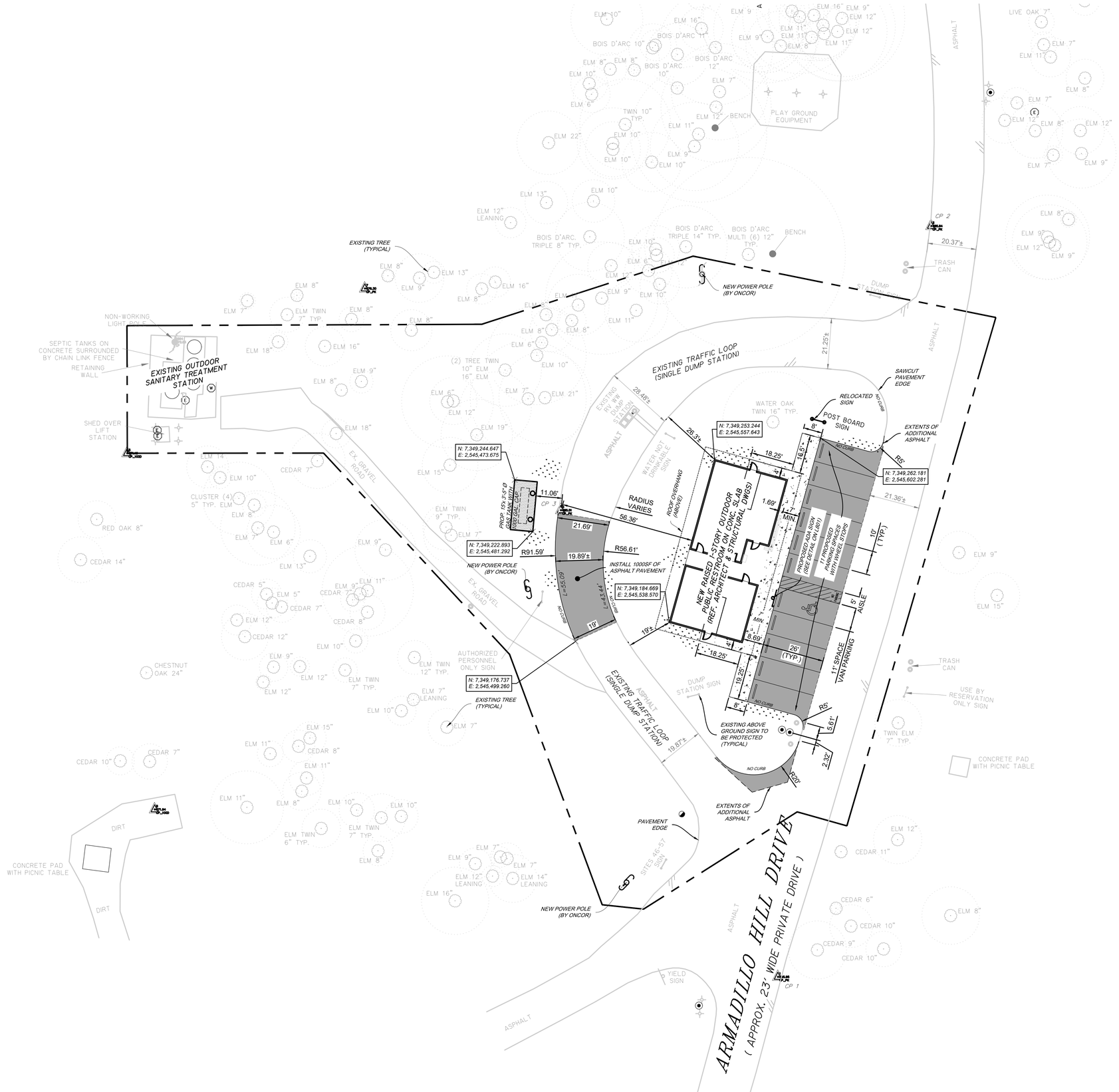


GRAPHIC SCALE

20 0 10 20 40

1 inch = 20 ft.

## Site Plan Legend

- PROPOSED BUILDING
- PROPOSED 10'x30' PROPANE TANK CONCRETE SLAB (SEE STRUCTURAL DRAWINGS FOR STRENGTH REQUIREMENTS) IF A LARGER TANK IS SELECTED THEN NOTED, NFPA 58 STANDARDS WILL GOVERN FOR THICKNESS REQUIREMENTS.
- PROPOSED ASPHALT PAVEMENT (SEE DETAIL ON FOR C801 THICKNESS)
- PROPOSED 4" CONCRETE SIDEWALK (SEE DETAIL ON FOR C801 THICKNESS)
- PROPOSED LANDSCAPE AREA (REFERENCE LANDSCAPE DRAWINGS)
- FULL DEPTH SAWCUT
- ASPHALT
- CONCRETE
- LIMITS OF CONSTRUCTION
- EXISTING OR PROPOSED SIGN
- EXISTING TREE TO REMAIN (REFER TO LANDSCAPE DRAWINGS FOR ALL NEW TREE INFORMATION)

See Drawing C101 for Sheet Notes

BENCHMARKS & CONTROL POINTS

CONTROL POINT #1: - MAG NAIL (SURFACE)

NORTHING: 7,349,035.722 EASTING: 2,545,584.371 ELEV. = 695.95'

CONTROL POINT #2: - MAG NAIL (SURFACE)

NORTHING: 7,349,351.350 EASTING: 2,545,648.776 ELEV. = 685.84'

CONTROL POINT #3: - MAG NAIL (SURFACE)

NORTHING: 7,349,231.892 EASTING: 2,545,493.116 ELEV. = 685.51'

01/22/2021

STATE OF TEXAS
DARIN JENNINGS
82476
LICENSED
PROFESSIONAL ENGINEER

shaping the built environment

JQ INFRASTRUCTURE, LLC
100 GLASS STREET, SUITE 201
972.392.7340
DALLAS, TEXAS 75207
PROJECT NO: 4200137
TBPE FIRM F-7986

TEXAS PARKS & WILDLIFE

GSBS ARCHITECTS
7291 GLEVIEW DRIVE
FORT WORTH, TX 76180
P 817.589.1722
GSBSARCHITECTS.COM
REGISTRATION NO. BR2895

# EISENHOWER STATE PARK

RESTROOM REPLACEMENT

PROJECT NUMBER: 1210136

DATE: 2021-01-22
DESIGNED BY: NP
DRAWN BY: AB
REVIEWED BY: DJ
REVISED:
REVISED:
REVISED:

SHEET TITLE
PAVING PLAN

SHEET NAME
C401

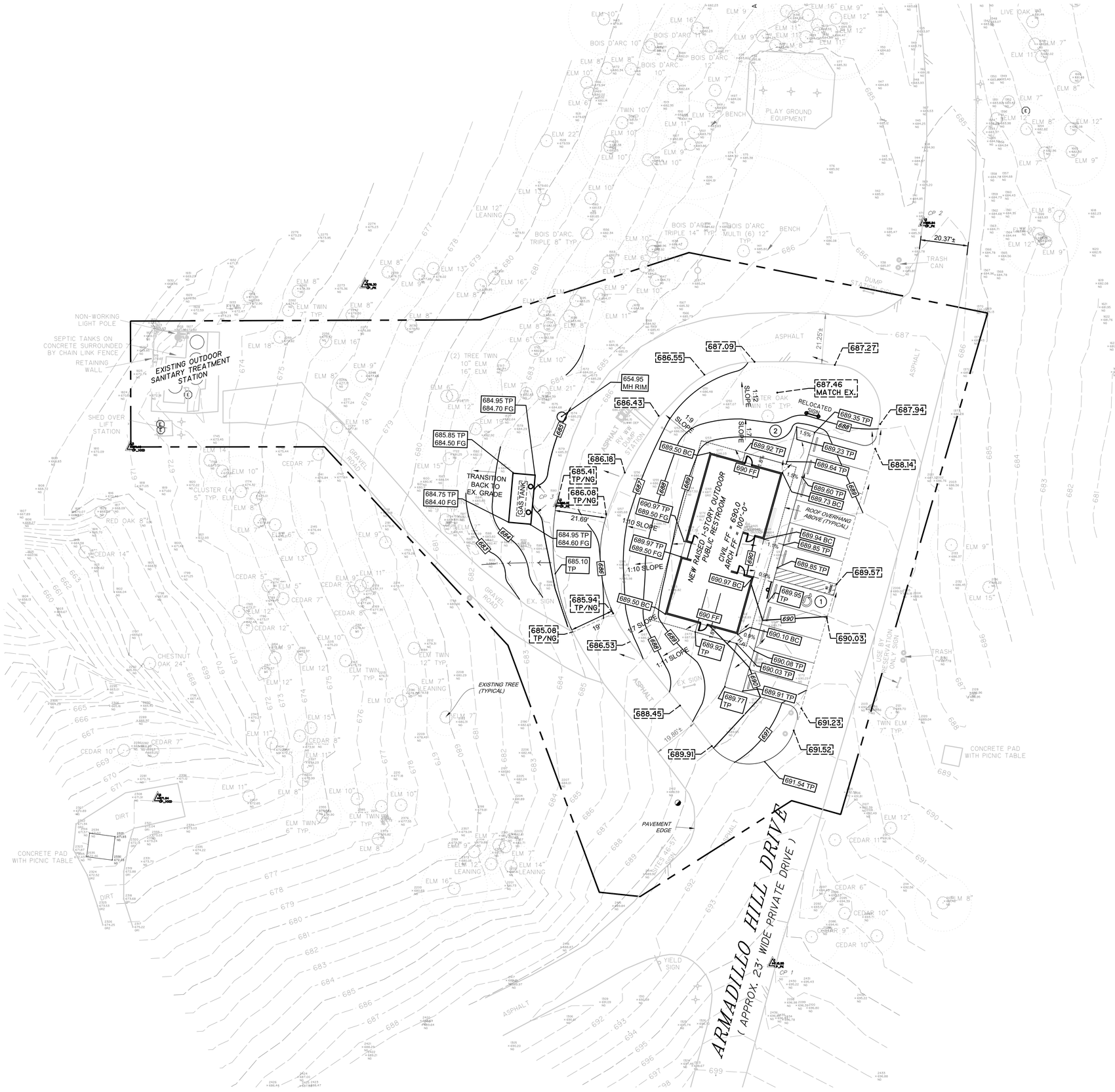


GRAPHIC SCALE

20 0 10 20 40

1 inch = 20 ft.

## Site Plan Legend

| | |
|---|---|
| | PROPOSED BUILDING |
| 478 | EXISTING CONTOUR AND ELEVATION |
| 478 | PROPOSED CONTOUR AND ELEVATION |
| 477.09 | MATCH EXISTING ELEVATION |
| 477.09 | PROPOSED SPOT GRADE |
| TC | TOP OF CURB ELEVATION |
| G | GUTTER ELEVATION |
| TP | TOP OF PAVEMENT |
| FF | FINISHED FLOOR ELEVATION |
| FG | FINISHED GRADE |
| NG | NATURAL GRADE |
| BC | BUILDING CORNER |
| H. P. | ELEVATION HIGH POINT |
| L. P. | ELEVATION LOW POINT |
| 0.0% | % SLOPE/GRADE |
| | FLOW DIRECTION |
| | SWALE/LOW POINT FLOW DIRECTION |
| | LIMITS OF CONSTRUCTION |

See Drawing C101 for Sheet Notes

## Keynotes

1. ADA/TAS ACCESSIBLE PARKING AND AISLE SHALL HAVE A MAX 2% CROSS SLOPE IN ALL DIRECTIONS.
2. GRADING THAT MAY TAKE PLACE UNDER AN EXISTING TREE TO REMAIN SHALL BE DONE BY HAND AND NOT WITH HEAVY MACHINERY. [REFERENCE LANDSCAPE DRAWINGS FOR ADDITIONAL TREE PROTECTION NOTES.]

BENCHMARKS & CONTROL POINTS

CONTROL POINT #1: - MAG NAIL (SURFACE)
NORTHING: 7,349,035.722 EASTING: 2,545,584.371 ELEV. = 695.95'

CONTROL POINT #2: - MAG NAIL (SURFACE)
NORTHING: 7,349,351.350 EASTING: 2,545,648.776 ELEV. = 685.84'

CONTROL POINT #3: - MAG NAIL (SURFACE)
NORTHING: 7,349,231.892 EASTING: 2,545,493.116 ELEV. = 685.51'

01/22/2021

STATE OF TEXAS
DARIN JENNINGS
82476
LICENSED
PROFESSIONAL ENGINEER

shaping the built environment

JQ INFRASTRUCTURE, LLC
100 GLASS STREET, SUITE 201
972.392.7340
DALLAS, TEXAS 75207
PROJECT NO: 4200137
TBPE FIRM F-7986

TEXAS PARKS & WILDLIFE

GSBS ARCHITECTS
7291 GLEVIEW DRIVE
FORT WORTH, TX 76180
P 817.589.1722
GSBSARCHITECTS.COM
REGISTRATION NO. BR2895

# EISENHOWER STATE PARK

RESTROOM REPLACEMENT
PROJECT NUMBER: 1210136

DATE: 2021-01-22
DESIGNED BY: NP
DRAWN BY: AB
REVIEWED BY: DJ
REVISED:
REVISED:
REVISED:

SHEET TITLE
GRADING PLAN

SHEET NAME
C501

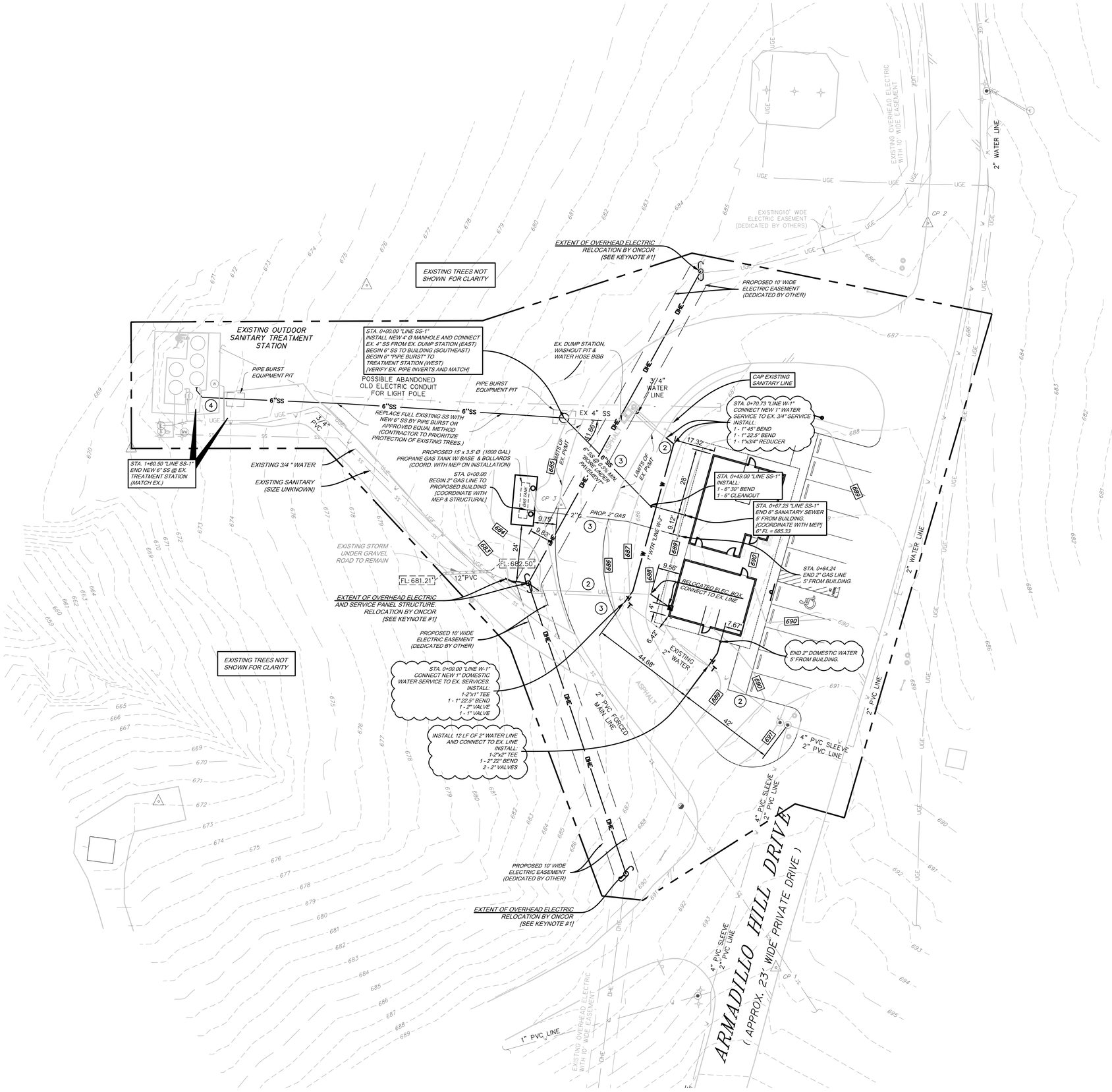


GRAPHIC SCALE

20 0 10 20 40

1 inch = 20 ft.

## Site Plan Legend

| | |
|---|---|
| WM | WATER METER |
| WV | WATER VALVE |
| LP | LIGHT STANDARD |
| HYD | FIRE HYDRANT |
| CO | CLEANOUT |
| GM | GAS METER |
| PP | EXISTING POWER POLE |
| 478 | EXISTING CONTOUR AND ELEVATION |
| 478 | PROPOSED CONTOUR AND ELEVATION |
| OHE | EXISTING OVERHEAD ELECTRIC |
| UGE | EXISTING UNDERGROUND ELECTRIC |
| # G | EXISTING GAS LINE |
| # SS | EXISTING SANITARY SEWER LINE |
| # W | EXISTING WATER LINE |
| # F | EXISTING WATER LINE (FIRE) |
| | EXISTING STORM SEWER |
| # W | PROP. WATER LINE |
| # SS | PROP. SANITARY LINE |
| | LIMITS OF CONSTRUCTION |

## See Drawing C101 for Sheet Notes

## Keynotes

1. REMOVAL AND RELOCATION OF OVERHEAD ELECTRIC LINES AND POWER POLES WILL BE COMPLETED BY ONCOR CONTRACTOR. ESMT BEARINGS WILL BE COORDINATED AND ESTABLISHED WITH ONCOR. TPWD CONTRACTOR WILL BE RESPONSIBLE FOR ANY NECESSARY TRENCHING ACROSS THE DRIVE PER ONCOR REQUIREMENTS. COORDINATION CAN BE CONDUCTED WITH THE FOLLOWING ONCOR REPRESENATIVE: BAILEY BOWERS – BAILEY.BOWERS@ONCOR.COM TEL: 903.868.8288
2. CONTRACTOR TO VERIFY DEPTH OF UNDERGROUND UTILITIES PRIOR TO CONSTRUCTION OF PROPOSED PAVEMENT.
3. INSTALL THE FOLLOWING UNDER THE RV DUMP ROAD LOOP: PROPOSED GAS/WATER SHALL BE INSTALLED IN 4" STEEL CASING PIPE. PROPOSED SANITARY LINE SHALL BE INSTALLED IN 10" STEEL CASING PIPE. (1/4" MINIMUM PIPE WALL THICKNESS)
4. CONTINUE REPLACEMENT OF SANITARY BY OPEN CUT FROM THE PIPE BURST EQUIPMENT PIT TO THE TREATMENT STATION.

BENCHMARKS & CONTROL POINTS

CONTROL POINT #1: - MAG NAIL (SURFACE)
NORTHING: 7,349,035.722 EASTING: 2,545,584.371 ELEV. - 695.95'

CONTROL POINT #2: - MAG NAIL (SURFACE)
NORTHING: 7,349,351.350 EASTING: 2,545,648.776 ELEV. - 685.84'

CONTROL POINT #3: - MAG NAIL (SURFACE)
NORTHING: 7,349,231.892 EASTING: 2,545,493.116 ELEV. - 685.51'

01/22/2021

STATE OF TEXAS
DARIN JENNINGS
82476
LICENSED
PROFESSIONAL ENGINEER

shaping the built environment

JQ INFRASTRUCTURE, LLC
100 GLASS STREET, SUITE 201
972.392.7340
DALLAS, TEXAS 75207
PROJECT NO: 4200137
TBPE FIRM F-7986

TEXAS PARKS & WILDLIFE

GSBS ARCHITECTS
7291 GLEVIEW DRIVE
FORT WORTH, TX 76180
817.267.1122
GSBSARCHITECTS.COM
REGISTRATION NO. BR2895

# EISENHOWER STATE PARK

**RESTROOM REPLACEMENT**

PROJECT NUMBER: 1210136

DATE: 2021-01-22
DESIGNED BY: NP
DRAWN BY: AB
REVIEWED BY: DJ
REVISED:
REVISED:
REVISED:

**SHEET TITLE**
UTILITY PLAN

SHEET NAME
**C601**

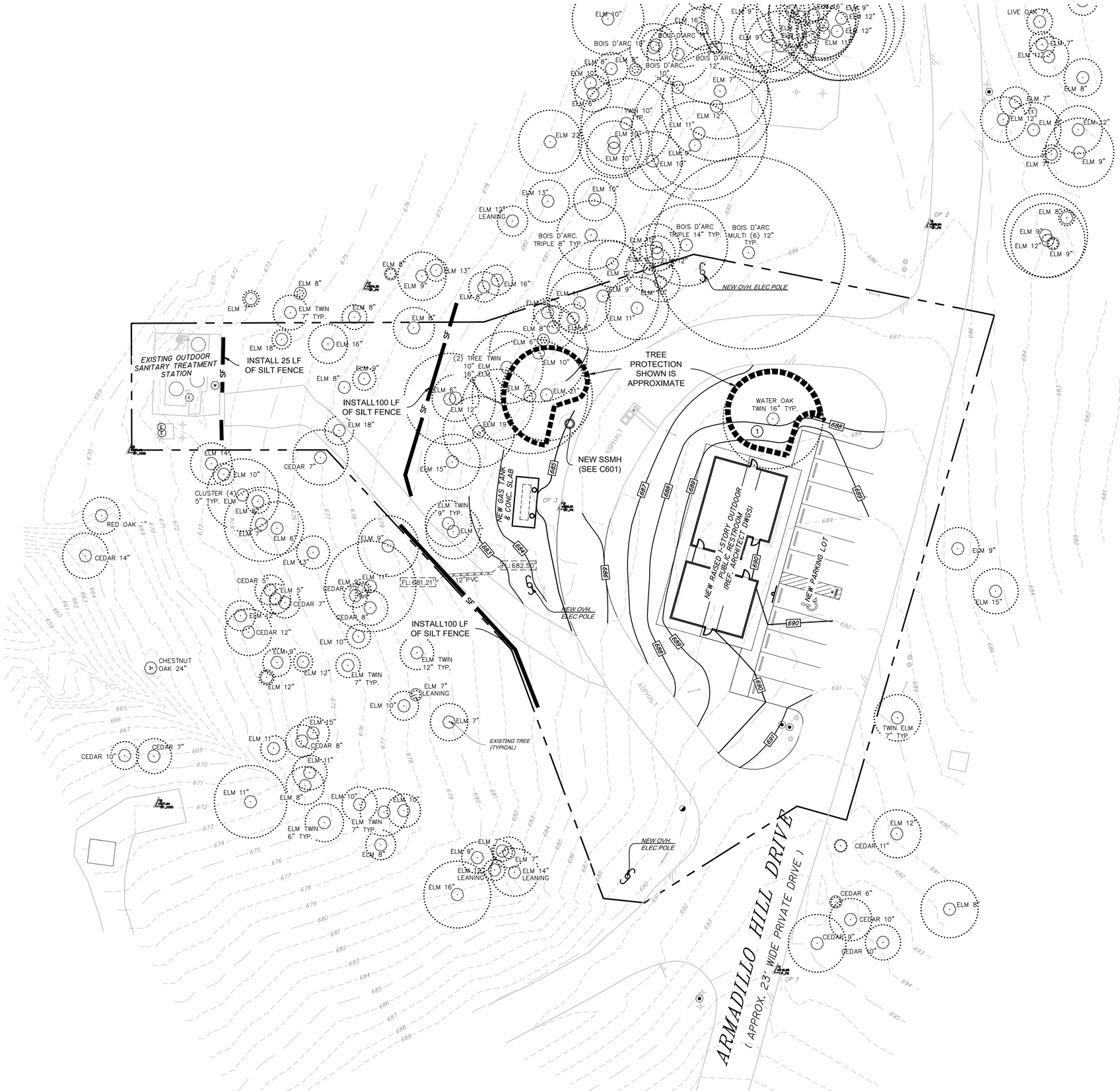


GRAPHIC SCALE

20 0 10 20 40

1 inch = 20 ft.

## Site Plan Legend

- LIMITS OF CONSTRUCTION
- EXISTING CONTOUR AND ELEVATION
- PROPOSED CONTOUR AND ELEVATION
- CONSTRUCTION ENTRANCE (SEE DETAIL 01/C702) LOCATION TO BE DETERMINED BY CONTRACTOR AND APPROVED BY TPWD.
- SILT FENCE (SEE DETAIL 02/C702)
- EXISTING TREE PROTECTION (COORDINATE WITH LANDSCAPE DRAWINGS ON INSTALLATION INSTRUCTIONS)

## See Drawing C101 for Sheet Notes

## Keynotes

1. PROPOSED GRADING PLACE UNDER AN EXISTING TREE TO REMAIN SHALL BE PERFORMED BY HAND AND NOT WITH HEAVY MACHINERY. [REFERENCE LANDSCAPE DRAWINGS FOR ADDITIONAL TREE PROTECTION NOTES.]

BENCHMARKS & CONTROL POINTS

CONTROL POINT #1: - MAG NAIL (SURFACE)
NORTHING: 7,349,035.722 EASTING: 2,545,584.371 ELEV. = 695.95'

CONTROL POINT #2: - MAG NAIL (SURFACE)
NORTHING: 7,349,351.350 EASTING: 2,545,648.776 ELEV. = 685.84'

CONTROL POINT #3: - MAG NAIL (SURFACE)
NORTHING: 7,349,231.892 EASTING: 2,545,493.116 ELEV. = 685.51'

01/22/2021

STATE OF TEXAS
DARIN JENNINGS
82476
LICENSED PROFESSIONAL ENGINEER

shaping the built environment

JQ INFRASTRUCTURE, LLC
100 GLASS STREET, SUITE 201
972.392.7340
DALLAS, TEXAS 75207
PROJECT NO: 4200137
TBPE FIRM F-7986

TEXAS PARKS & WILDLIFE

GSBS ARCHITECTS
7291 GLEVIEW DRIVE
FORT WORTH, TX 76180
P 817.589.1722
GSBSARCHITECTS.COM
REGISTRATION NO. BR2895

# EISENHOWER STATE PARK

RESTROOM REPLACEMENT
PROJECT NUMBER: 1210136

DATE: 2021-01-22
DESIGNED BY: NP
DRAWN BY: AB
REVIEWED BY: DJ
REVISED:
REVISED:
REVISED:

SHEET TITLE
EROSION CONTROL PLAN

SHEET NAME
C701

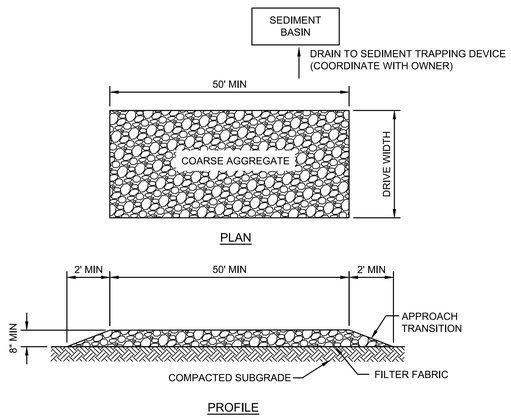


CONSTRUCTION ENTRANCE NOTES:

1. UNTIL PERMANENT PAVEMENT HAS BEEN PLACED WITHIN DESIGNATED CONSTRUCTION ENTRANCE AREA, CONTRACTOR SHALL PROVIDE AGGREGATE BASE AS PER THIS DRAWING.
2. STONE SIZE: 3" TO 5" OPEN GRADED ROCK; LENGTH: AS EFFECTIVE BUT NOT LESS THAN 50 FEET IN LENGTH.
3. FILTER FABRIC INSTALLED PRIOR TO INSTALLATION OF ROCK, ON TOP OF EXISTING SOIL OR COMPACTED BASE MATERIAL.
4. WASHING: WHEN NECESSARY, VEHICLE WHEELS SHALL BE CLEANED TO REMOVE SEDIMENT PRIOR TO ENTRANCE ONTO A PUBLIC ROADWAY. WHEN WASHING IS REQUIRED, IT SHALL BE DONE ON AN AREA STABILIZED WITH CRUSHED STONE AND DRAINS INTO AN APPROVED TRAP OR SEDIMENT BASIN. ALL SEDIMENT SHALL BE PREVENTED FROM ENTERING ANY STORM DRAIN, DITCH, WATERCOURSE OR ROADWAY USING APPROVED METHODS.
5. MAINTENANCE: THE EXIT SHALL BE MAINTAINED IN A CONDITION THAT WILL PREVENT TRACKING OR FLOWING OF SEDIMENT ONTO A PUBLIC ROADWAY. THIS MAY REQUIRE PERIODIC TOP DRESSING WITH ADDITIONAL STONE AS CONDITIONS DEMAND, AS WELL AS REPAIR AND CLEAN OUT OF ANY MEASURE DEVICES USED TO TRAP SEDIMENT. ALL SEDIMENT THAT IS SPILLED, DROPPED, WASHED OR TRACKED ONTO PUBLIC ROADWAY MUST BE REMOVED IMMEDIATELY.
6. DRAINAGE: EXIT MUST BE PROPERLY GRADED OR INCORPORATE A DRAINAGE SWALE TO PREVENT RUNOFF FROM LEAVING THE CONSTRUCTION SITE.
7. LOCATION OF SEDIMENT BASIN TO BE DETERMINED BY SLOPE OF AREA WHERE STABILIZED EXIT IS LOCATED. TO BE INSTALLED DOWNSTREAM OF STABILIZED CONSTRUCTION ENTRANCE.

## 01 CONSTRUCTION ENTRANCE
N.T.S.

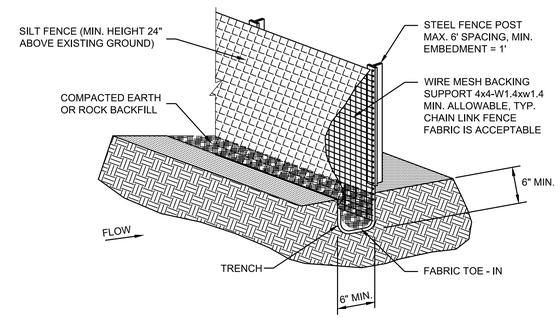


SILT FENCE GENERAL NOTES:

1. STEEL POSTS WHICH SUPPORT THE SILT FENCE SHALL BE INSTALLED ON A SLIGHT ANGLE TOWARD THE ANTICIPATED RUNOFF SOURCE. POST MUST BE EMBEDDED A MINIMUM OF 1 FOOT.
2. THE TOE OF THE SILT FENCE SHALL BE TRENCHED IN WITH A SPADE OR MECHANICAL TRENCHER, SO THAT THE DOWN SLOPE FACE OF THE TRENCH IS FLAT AND PERPENDICULAR TO THE LINE OF FLOW. WHERE FENCE CANNOT BE TRENCHED IN (e.g. PAVEMENT), WEIGHT FABRIC FLAP WITH ROCK ON UPHILL SIDE TO PREVENT FLOW FROM SEEPING UNDER FENCE.
3. THE TRENCH MUST BE A MINIMUM OF 6 INCHES WIDE TO ALLOW FOR THE SILT FENCE FABRIC TO BE LAID IN THE GROUND AND BACKFILLED WITH COMPACTED MATERIAL.
4. SILT FENCE SHOULD BE SECURELY FASTENED TO EACH STEEL SUPPORT POST OR TO WOVEN WIRE, WHICH IN TURN IS ATTACHED TO THE STEEL FENCE POST. THERE SHALL BE A 3 FOOT OVERLAP, SECURELY FASTENED WHERE ENDS OF FABRIC MEET.
5. INSPECTION SHALL BE MADE EVERY WEEK AND AFTER EACH 1/2" RAINFALL. REPAIR OR REPLACEMENT SHALL BE MADE PROMPTLY AS NEEDED.
6. SILT FENCE SHALL BE REMOVED WHEN THE SITE IS COMPLETELY STABILIZED SO AS NOT TO BLOCK OR IMPEDE STORM FLOW OF DRAINAGE.
7. ACCUMULATED SILT SHALL BE REMOVED WHEN IT REACHES A DEPTH OF HALF THE HEIGHT OF THE FENCE. THE SILT SHALL BE DISPOSED OF AT AN APPROVED SITE AND IN SUCH A MANNER AS TO NOT CONTRIBUTE TO ADDITIONAL SILTATION.

## 02 SILT FENCE INSTALLATION
N.T.S.

TEXAS PARKS & WILDLIFE

GSBS ARCHITECTS
7291 GLENVIEW DRIVE
FORT WORTH, TX 76180
P: 817.509.1722
GSBSARCHITECTS.COM
REGISTRATION NO. BR2895

# EISENHOWER STATE PARK
**RESTROOM REPLACEMENT**
PROJECT NUMBER: 1210136

DATE: 2021-01-22
DESIGNED BY: NP
DRAWN BY: AB
REVIEWED BY: DJ
REVISED:
REVISED:
REVISED:

**SHEET TITLE**
EROSION CONTROL DETAILS

01/22/2021

STATE OF TEXAS
DARIN JENNINGS
82476
LICENSED PROFESSIONAL ENGINEER

shaping the built environment
JQ INFRASTRUCTURE, LLC
100 GLASS STREET, SUITE 201
972.392.7340
DALLAS, TEXAS 75207
PROJECT NO: 4200137
TBPE FIRM F-7986

SHEET NAME
**C702**

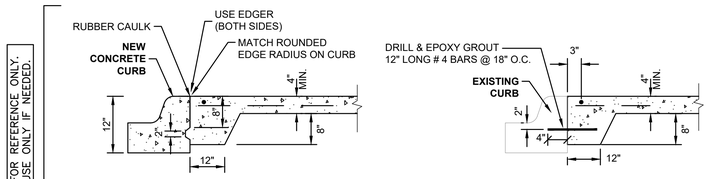


JOINT DETAIL FOR SIDEWALK ADJACENT TO CURB
N.T.S.

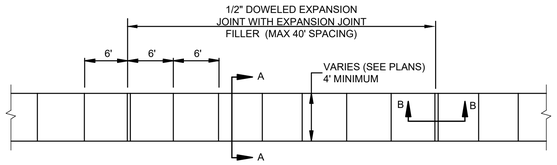


PLAN VIEW
N.T.S.

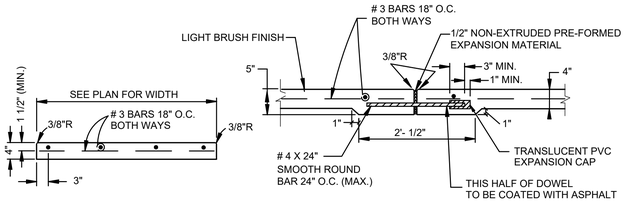


SECTION "A-A"
N.T.S.

SECTION "B-B"
N.T.S.

NOTES:

1. CROSS SLOPE OF SIDEWALK SHALL BE 1:50 (2%) MAXIMUM.
2. SIDEWALK SHALL BE 4" CONCRETE WITH 3000 PSI MINIMUM COMPRESSIVE STRENGTH AT 28 DAYS AFTER PLACEMENT UNLESS OTHERWISE NOTED.
3. ALL HONEYCOMB IN BACK OF CURB TO BE TROWEL-PLASTERED BEFORE POURING SIDEWALK.
4. LUG MAY BE FORMED BY SHAPING SUBGRADE TO APPROXIMATE DIMENSIONS SHOWN.
5. SIDEWALK BACKFILL & SUBGRADE SHALL BE COMPACTED IN LIFTS NOT TO EXCEED 6 INCHES & IS A MINIMUM 95% OF ASTM D698 PROCTOR DENSITY WITH A -2% TO +4% OF OPTIMUM MOISTURE CONTENT.
6. 1/2" EXPANSION JOINTS SHALL BE PROVIDED AT STREET EXPANSION JOINTS AND AT MAX. 40 FOOT SPACING IN LINE WITH STREET SAW JOINTS.

## 01 REINFORCED CONCRETE SIDEWALK
N.T.S.

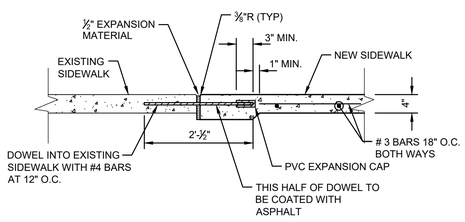


## 02 EXISTING SIDEWALK TO PROPOSED SIDEWALK
N.T.S.

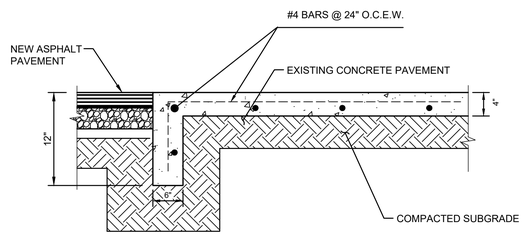


## 03 SIDEWALK PAVEMENT TO ASPHALT
N.T.S.

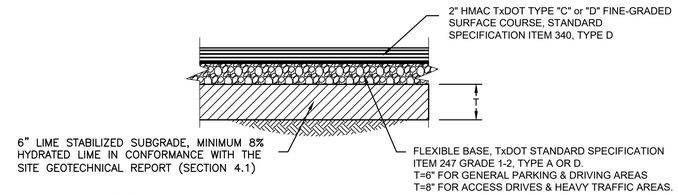


NOTE:

1. GEOGRID MAY BE USED IN LIEU OF LIME STABILIZATION FOR ASPHALT PAVEMENT, REFER TO GEOTECHNICAL REPORT FOR REQUIREMENTS.
2. REFER TO LATEST GEOTECHNICAL REPORT DOCUMENTED FOR THIS SITE OR THE MATCH EXISTING CONDITIONS IF CONNECTING AND/OR REPLACING EXISTING ASPHALT.

## 04 ASPHALT PAVEMENT SECTION
N.T.S.

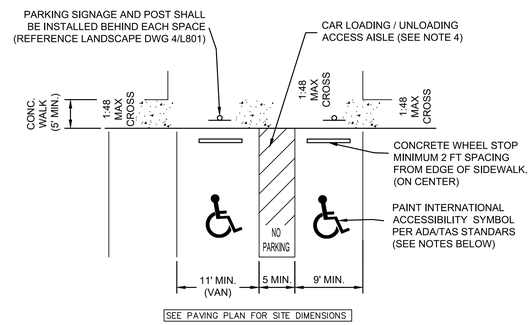


NOTE:

1. MAXIMUM SLOPE OF HANDICAP PARKING SPACES & ACCESS AISLE TO BE 1:50 (2%) IN ANY DIRECTION.
2. ALL SIGNAGE / IDENTIFICATION SHALL MEET THE REQUIREMENTS OF TEXAS DEPARTMENT OF LICENSING AND REGULATION TEXAS ACCESSIBILITY STANDARDS (TAS) SECTION 502 & ADMINISTRATIVE RULE 68.104.
3. REFER TO STRIPING AND ACCESSIBILITY SECTION ON THE GENERAL NOTES SHEET FOR ADDITIONAL REQUIREMENTS AND INFORMATION.
4. AISLE STRIPING WILL BE ANGLED AT 45°, BE SPACED AT 24" MINIMUM INTERVALS ON CENTER, WILL BE ENCLOSED WITH A STRIPED BOUNDARY. MARKINGS WILL BE THERMOPLASTIC OR PAINTED 4" WIDE AND BE A COLOR THAT CONTRASTS TO THE PAVEMENT. (PREFERABLE WHITE OR BLUE)
5. ALL PARKING AISLES WILL INCLUDE PAINTED LETTERS WITH THE WORDS "NO PARKING". PARKING SPACES MAY ALSO INCLUDE LETTERS WITH THE WORD "VAN" AS NEEDED.

## 05 TYPICAL ACCESSIBLE PARKING (NO RAMP)
N.T.S.

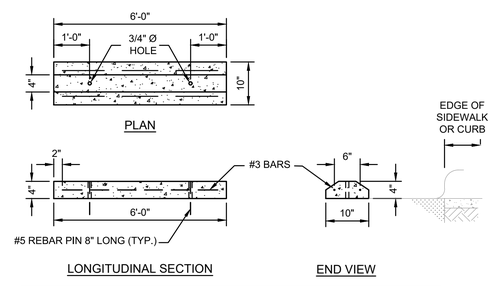


ALL CONCRETE SHALL BE MINIMUM 3500 PSI STRENGTH @ 28 DAYS

## 06 TYPICAL CONCRETE WHEELSTOP
N.T.S.

NOTE: ANY WHEELSTOP OTHER THEN A CONCRETE STOP WILL NEED TO BE REVIEWED BY THE ENGINEER AND APPROVED BY TPWD PRIOR TO INSTALLATION.

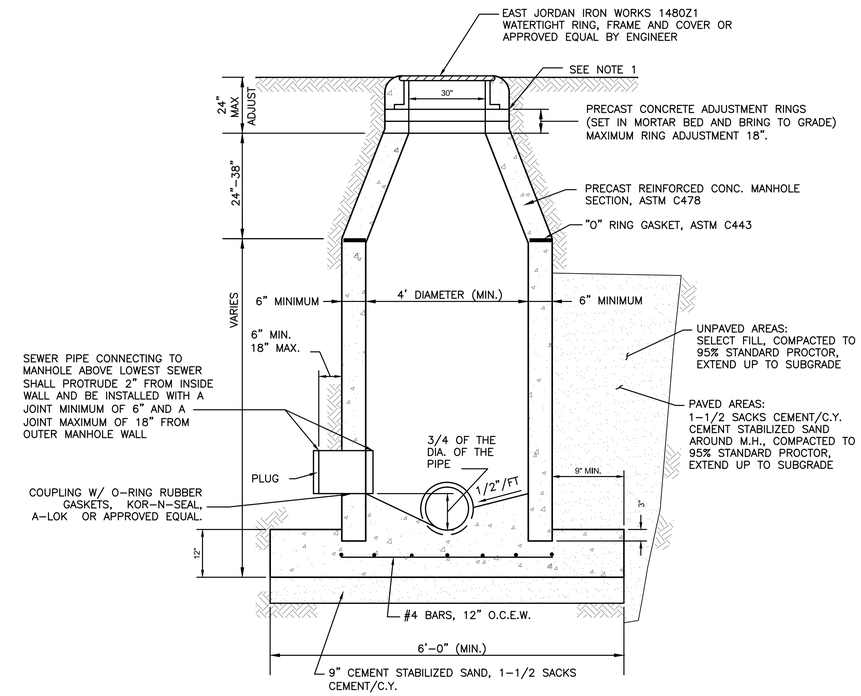


NOTES:

1. A MAX. OF 4' AND A MIN. OF 2' THROAT RINGS SHALL BE USED AT EACH M.H. IN NEW OR EXISTING STREETS.
2. ALL RINGS AND COVERS ARE TO BE ADJUSTED TO FINAL GRADE AT NO ADDITIONAL COST TO THE OWNER.
3. ALL SANITARY SEWER MANHOLES TO BE TESTED PER TCEQ 217.58.
4. DROP CONNECTIONS WILL BE REQUIRED WHERE VERTICAL DISTANCE FROM MANHOLE INVERT TO FLOW-LINE OF INCOMING PIPE IS 30" OR GREATER

## 07 PRECAST SANITARY SEWER MANHOLE DETAIL
N.T.S.

TEXAS PARKS & WILDLIFE

GSBS ARCHITECTS
7291 GLENVIEW DRIVE
FORT WORTH, TX 76180
817.860.1122
GSBSARCHITECTS.COM
REGISTRATION NO. BR2895

# EISENHOWER STATE PARK
RESTROOM REPLACEMENT
PROJECT NUMBER: 1210136

DATE: 2021-01-22
DESIGNED BY: NP
DRAWN BY: AB
REVIEWED BY: DJ
REVISED:
REVISED:
REVISED:

SHEET TITLE
CIVIL DETAILS

SHEET NAME
C801

01/22/2021

STATE OF TEXAS
DARIN JENNINGS
82478
LICENSED
PROFESSIONAL ENGINEER
shaping the built environment
InFrastructure
JQ INFRASTRUCTURE, LLC
100 GLASS STREET, SUITE 201
972.392.7340
DALLAS, TEXAS 75207
PROJECT NO: 4200137
TBPE FIRM F-7986

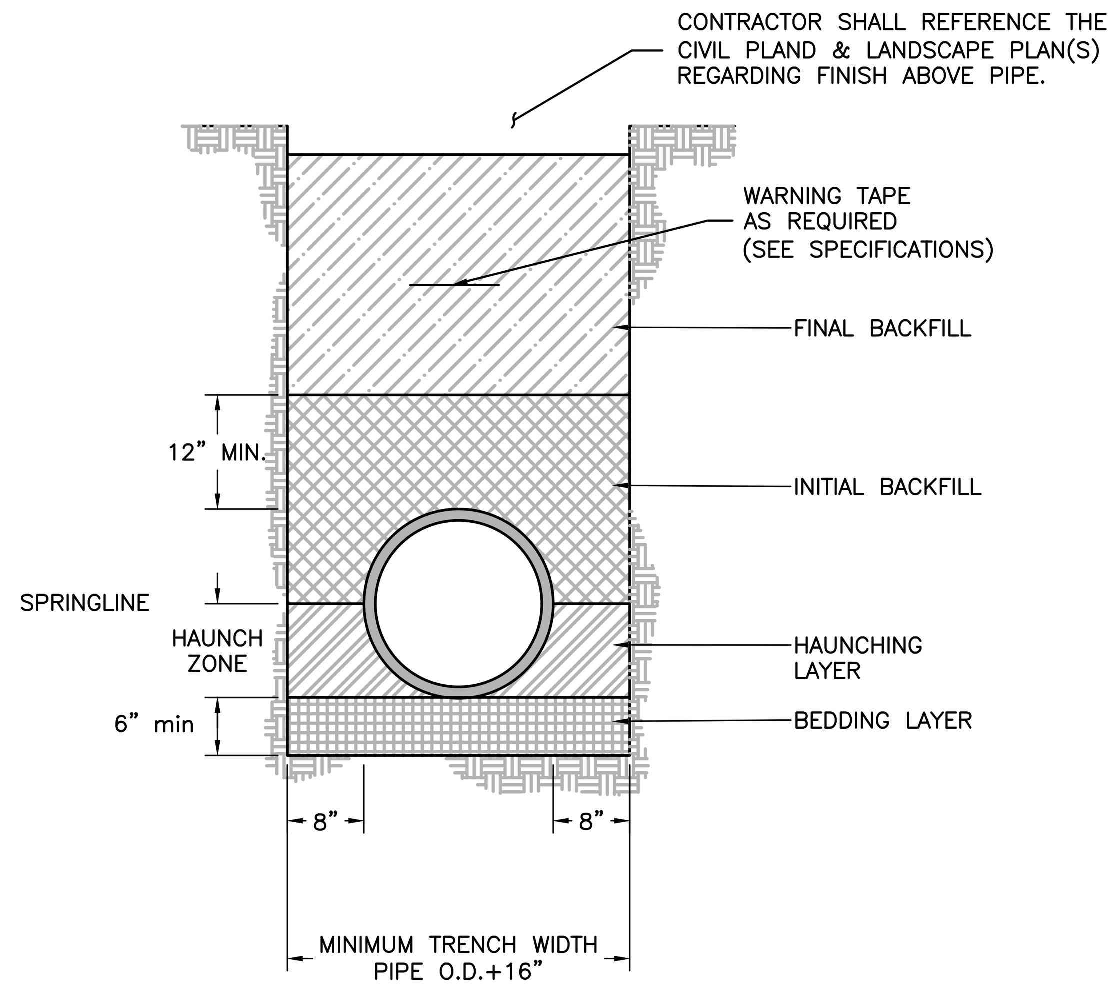


NOTES:
1. TRENCHING: EXCAVATE TRENCH WIDTHS TO THE DIMENSIONS SHOWN IN THE DETAIL. DO NOT OVER EXCAVATE. TRENCHING SHALL BE COMPLETED IN EXISTING SOILS WITH SIDEWALLS REASONABLY VERTICAL TO THE TOP OF THE PIPE. WHEN EXCAVATION DEPTHS OR SOIL CONDITIONS REQUIRE SHORING OR USE OF A TRENCH BOX, THE BOTTOM OF THE SHORING OR TRENCH BOX SHALL BE PLACED NO LOWER THAN THE TOP OF THE PIPE. FOLLOW ALL OSHA GUIDELINES FOR TRENCH SAFETY.
2. BEDDING: PLACE A 4–6 INCH LAYER OF BEDDING MATERIAL MEETING ASTM D2321 CLASS IB, II, OR III IN THE BOTTOM OF THE TRENCH AND COMPACT TO 85–90% SPD. CLASS IA OPEN–GRADED AGGREGATES ARE NOT PERMITTED WITHOUT PERMISSION FROM THE ENGINEER. REFER TO ASTM D2321 FOR MORE COMPLETE SOIL DESCRIPTIONS OR CONTACT THE ENGINEER.
3. PIPE: PLACE THE PIPE ONTO THE BEDDING LAYER. THE PIPE MUST BE FULLY SUPPORTED ALONG ITS ENTIRE LENGTH AT THE ELEVATIONS PROVIDED IN THE CONSTRUCTION PLANS. THE TRENCH MUST BE FREE OF CONSTRUCTION DEBRIS, ROCKS OR UNSTABLE BEDDING.
4. HAUNCHING: USE AN ASTM D2321 CLASS IB, II, OR III MATERIAL TO HAUNCH THE PIPE TO THE SPRINGLINE IN MAXIMUM 4–6 INCH LIFTS. WORK THE MATERIAL IN BY HAND AROUND THE PIPE TO PROVIDE UNIFORM SUPPORT AND TAMP TO 85–90% SPD.
5. INITIAL BACKFILL: THE SAME MATERIAL USED FOR HAUNCHING SHALL BE USED FOR INITIAL BACKFILL. BACKFILL FROM THE SPRINGLINE TO MINIMUM 12 INCHES ABOVE THE CROWN OF THE PIPE IN MAXIMUM 6 INCH LIFTS AND COMPACT TO 90% SPD.
6. FINAL BACKFILL: AFTER COMPLETION OF INITIAL BACKFILL, BEGIN FINAL BACKFILL. FINAL BACKFILL MAY BE A GENERAL EARTH FILL PLACED IN MAXIMUM 6 INCH LIFTS AND COMPACTED TO 90% SPD.
7. COMPLETION: IN LANDSCAPE AREAS, THE FINAL 6 INCHES OF SOIL SHALL BE TOPSOIL OR ANY OTHER MATERIAL SPECIFIED IN THE LANDSCAPING PLANS. IN PAVEMENT AREAS, THE SUBGRADE SHALL BE PREPARED PER PAVING PLANS AND DETAILS.

| ASTM D2321 | | ASTM D2487 | | MINIMUM COMPACTION | ASTM D2321 | | | | | | |
|---|---|---|---|---|---|---|---|---|---|---|---|
| CLASS | DESCRIPTION | SOIL | DESCRIPTION | | PERCENT PASSING SIEVE SIZES | | | ATTERBERG LIMITS | | COEFFICIENTS | |
| | | | | | 1 ½" | No. 4 | No. 200 | LL | PI | INIFORMITY Cu | CURVATURE Cc |
| IA* | OPEN–GRADED CLEAN MANUFACTURED AGGREGATES | N/A | ANGULAR CRUSHED STONE OR ROCK, CRUSHED GRAVEL, CRUSHED SLAG; LARGE VOIDS WITH LITTLE OR NO FINES | DUMPED TO SLIGHT | 100% | <10% | <5% | NON PLASTIC | | N/A | |
| IB | DENSE–GRADED CLEAN MANUFACTURED AGGREGATES | | DENSE–GRADED ANGULAR CRUSHED STONE OR OTHER CLASS IA MATERIAL AND STONE/SAND MIXTURES WITH GRADATIONS SELECTED TO MINIMIZE MIGRATION OF ADJACENT SOILS; LITTLE OR NO FINES | | 100% | <50% | <5% | NON PLASTIC | | | |
| II | CLEAN, COARSE GRAINED SOILS | GW | WELL–GRADED GRAVEL, GRAVE–SAND MIXTURES; LITTLE OR NO FINES | MODERATE (85%) | 100% | <50% OF COARSE FRACTION | <5% | NON PLASTIC | | >4 | 1–3 |
| | | GP | POORLY–GRADED GRAVEL, GRAVE–SAND MIXTURES; LITTLE OR NO FINES | | | | | | | <4 | <1 OR >3 |
| | | SW | WELL–GRADED SANDS, GRAVELLY–SAND MIXTURES; LITTLE OR NO FINES | | | >50% OF COARSE FRACTION | | | | >6 | 1 TO 3 |
| | | SP | POORLY–GRADED SANDS, GRAVELY SANDS; LITTLE OR NO FINES | | | | | | | <6 | <1 OR >3 |
| | CLEAN, COARSE GRAINED SOILS, BORDERLINE CLEAN TO W/ FINES | GW–GC, SP, SM | SANDS AND GRAVELS WHICH ARE BORDERLINE BETWEEN CLEAN AND WITH FINES | | | VARIES | 5% TO 12% | | | SAME AS FOR GW, GP, SW AND SP | |
| III | COARSE GRAINED SOILS WITH FINES | GM | SILTY GRAVELS, GRAVEL–SAND SILT MIXTURES | MODERATE TO HIGH (90%) | 100% | <50% OF COARSE FRACTION | 12% TO 50% | N/A | <4 OR <A LINE | N/A | |
| | | GC | CLAYEY GRAVELS, GRAVEL–SAND CLAY MIXTURES | | | | | | <7 AND >A LINE | | |
| | | SM | SILTY SANDS, SAND–SILT MIXTURES | | | >50% OF COARSE FRACTION | | | >4 OR <A LINE | | |
| | | SC | CLAYEY SANDS, SAND–CLAY MIXTURES | | | | | | >4 OR >A LINE | | |

* CONSULT THE ENGINEER OF RECORD IF THERE IS ANY QUESTIONS WITH THE ABOVE CHART.
* CONTRACTOR HAS BEEN APPROVED TO USE BURST PIPE METHOD FOR REPLACEMENT OF THE SANITARY SEWER FOR THIS PROJECT.

## 01 TYPICAL TRENCH BACKFILL DETAIL
N.T.S.

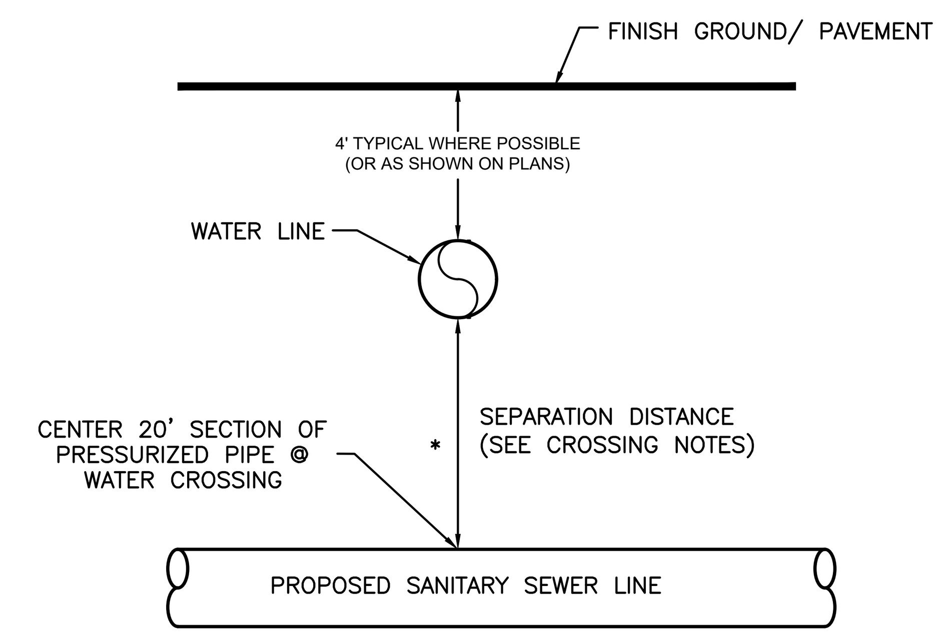


UTILITY CROSSING NOTES:
1. ALL HORIZONTAL AND VERTICAL PIPE LOCATION SHALL CONFORM TO TEXAS ENVIRONMENTAL QUALITY RULE §217 IN ITS ENTIRETY; UNLESS OTHERWISE NOTED.
2. THE COLLECTION SYSTEM (WASTEWATER) THAT CROSSES BELOW A WATER SUPPLY PIPE WILL BE CONSTRUCTED OF AT LEAST 150 PSI PRESSURE CLASS, CORROSION–RESISTANT, NON–BRITTLE PIPE AND AN ALLOWABLE SOIL BEARING VALUE OF 2,500 PSF. THESE ARE MINIMUM REQUIREMENTS.
3. A COLLECTION SYSTEM PIPE THAT IS WITHIN 9 FEET OF A PUBLIC WATER SUPPLY WILL HAVE THE INITAIL BACKFILL AROUND THE VACINITY OF THE WATER SUPPLY TO BE SAND STABILIZED.
4. PIPES SHALL HAVE AT LEAST SIX INCHES OF SEPARATION BETWEEN THE OUTSIDES OF THE PIPES AT THE POINT OF INTERSECTION WHERE WATER IS ABOVE COLLECTION PIPE.
5. PIPES AT CROSSING WILL NOT HAVE A JOINT LOCATED WITHIN 18 FEET OF SAID CROSSING.
6. JOINTS SHALL BE DESIGNED TO SEAL ATMOSPHERIC PRESSURE.
7. REFER TO TCEQ RULES FOR ADDITIONAL REQUIREMENTS NOT MENTIONED HERE.

## 01B WATER CROSSING WASTEWATER CRITERIA
N.T.S.

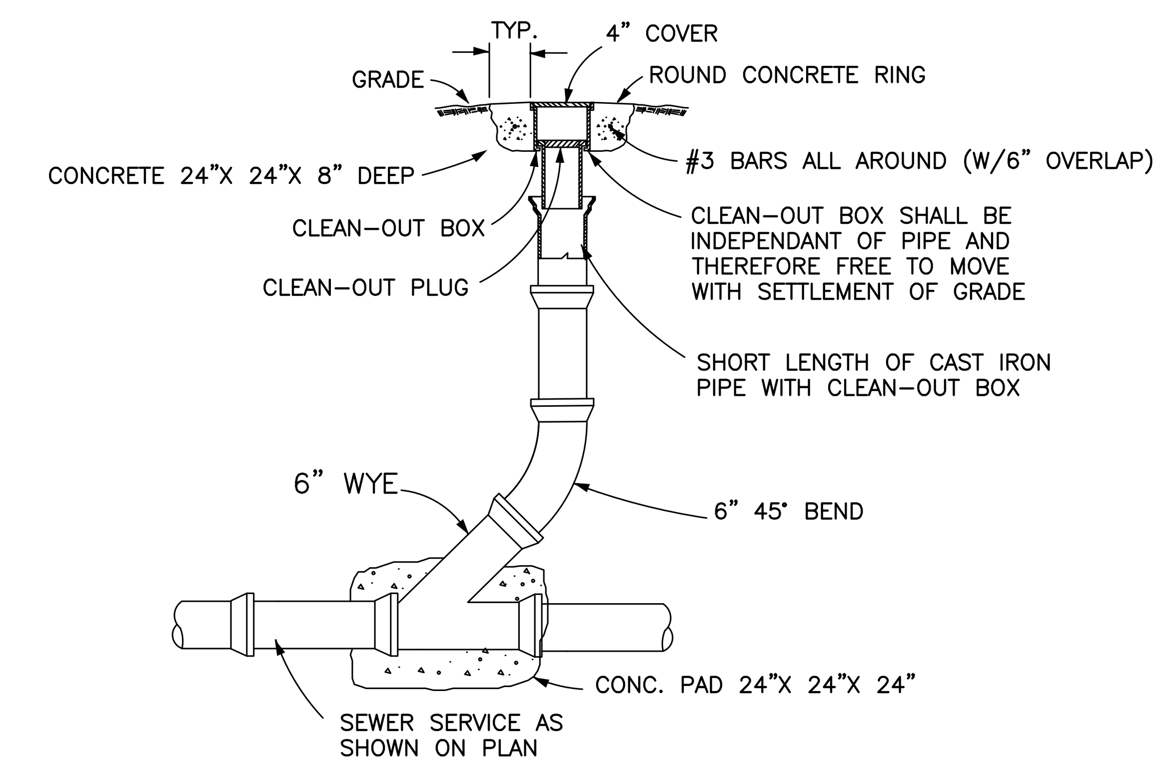


## 02 LATERAL CONNECTION TO CLEANOUT DETAIL
N.T.S.

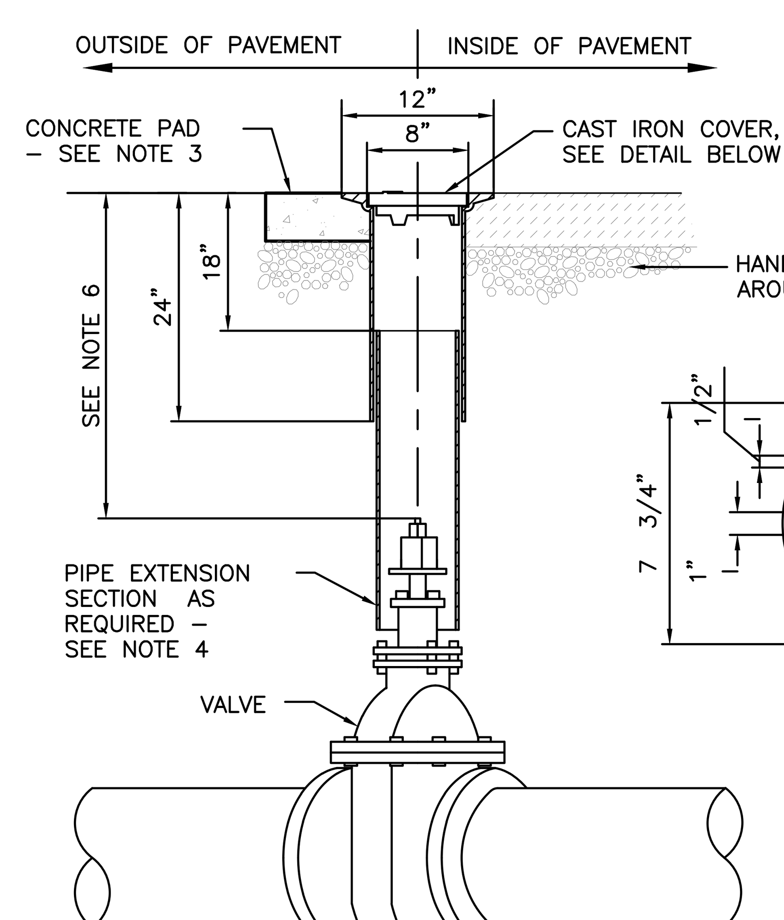


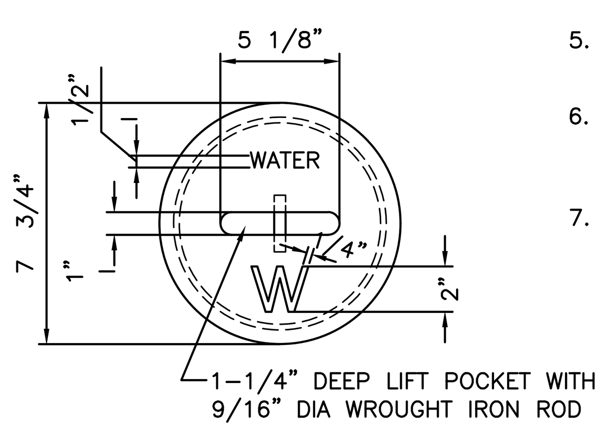


COVER PLAN

NOTES:
1. VALVE TYPE, SIZE AND ENDS AS SPECIFIED OR SHOWN ON PLANS.
2. ALL VALVES THAT ARE 2–INCH AND LARGER SHALL HAVE AN OPERATING NUT.
3. WHEN USED IN NON–PAVED AREAS, PROVIDE AN 18–INCH SQUARE OR 24–INCH DIAMETER ROUND BY 4–INCH THICK PORTLAND CEMENT CONCRETE PAD.
4. FOR PIPE EXTENSION SECTION: USE A 6–INCH O.D. 12 GAUGE STEEL OR 6–INCH AWWA C900 PVC PIPE IN ONE–PIECE CONSTRUCTION WITH NO LONGITUDINAL CUTS.
5. THE CAST IRON COVER IS TO HAVE WATER OR W CAST WITH RAISED LETTERING INTO TOP SURFACE.
6. ALL VALVE OPERATORS ARE TO EITHER BE WITHIN 18 INCHES OF THE FINAL GRADE OR EXTENDED TO WITHIN 18 INCHES OF FINAL GRADE.
7. FOR 18–INCHES OF VALVE BOX, FLANGED UPPER SECTION OF VALVE BOX AND COVER, USE OLYMPIC FOUNDRY VB 910.

## 03 TYPICAL WATER VALVE SETTING
N.T.S.

THRUST BLOCKING NOTES

ALL CALCULATIONS ARE BASED ON A WATER LINE PRESSURE OF 150 PSI AND AN ALLOWABLE SOIL BEARING VALUE OF 2,500 PSF. THESE ARE MINIMUM REQUIREMENTS – INCREASE AREA FOR CONDITIONS OTHER THAN THESE VALUES.

CLASS 2,000 PSI CONCRETE SHALL BE USED FOR ALL BLOCKING UNLESS OTHERWISE NOTED ON STANDARD DETAILS AND/OR PLANS.

THE MINIMUM VERTICAL DIMENSION OF ALL BLOCKING SHALL BE 1.5 TIMES THE PIPE DIAMETER WITH AT LEAST 0.75 TIMES THE PIPE DIAMETER EXTENDING BOTH ABOVE AND BELOW THE PIPE CENTERLINE. THIS DIMENSION DETERMINES THE "A" DIMENSION FOR 11 ¼° BENDS.

FOR 22 ½°, 45°, 90°, AND TEES AND PLUGS, THE VERTICAL DIMENSION SHALL BE EQUAL TO THE HORIZONTAL DIMENSION SHOWN TO PRODUCE THE REQUIRED MINIMUM AREA.

BLOCKING TO BE AGAINST UNDISTURBED TRENCH WALLS AND BOTTOM.

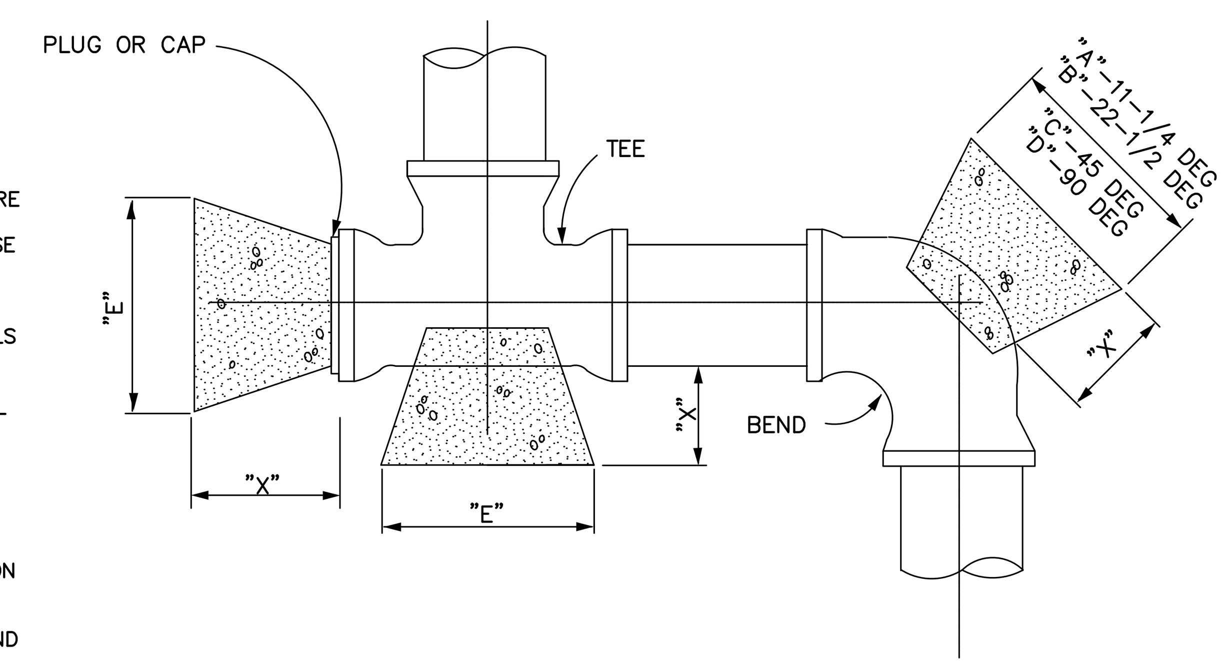


| PIPE SIZE | "X" DIM. (ft) | 11–1/4 DEGREES | | 22–1/2 DEGREES | | 45 DEGREES | | 90 DEGREES | | TEE & PLUG | |
|---|---|---|---|---|---|---|---|---|---|---|---|
| | | "A" | MIN. AREA (sf) | "B" | MIN. AREA (sf) | "C" | MIN. AREA (sf) | "D" | MIN. AREA (sf) | "E" | MIN. AREA (sf) |
| 4" | 1.5 | 1.00 | 1.00 | 1.00 | 1.00 | 1.00 | 1.00 | 1.00 | 1.06 | 1.00 | 1.00 |
| 6" | 1.5 | 1.00 | 1.00 | 1.00 | 1.00 | 1.14 | 1.30 | 1.55 | 2.40 | 1.30 | 1.70 |
| 8" | 1.5 | 1.00 | 1.00 | 1.08 | 1.18 | 1.52 | 2.31 | 2.07 | 4.27 | 1.74 | 3.02 |
| 10" | 1.5 | 1.00 | 1.00 | 1.35 | 1.84 | 1.90 | 3.61 | 2.58 | 6.66 | 2.17 | 4.71 |
| 12" | 1.5 | 1.00 | 1.33 | 1.63 | 2.65 | 1.86 | 5.19 | 3.10 | 9.60 | 2.61 | 6.79 |

## 04 HORIZONTAL THRUST BLOCKING
N.T.S.

01/22/2021

STATE OF TEXAS
DARIN JENNINGS
82476
LICENSED PROFESSIONAL ENGINEER

shaping the built environment
JQ Infrastructure
JQ INFRASTRUCTURE, LLC
100 GLASS STREET, SUITE 201 DALLAS, TEXAS 75207
972.392.7340
PROJECT NO: 4200137 TBPE FIRM F-7986

TEXAS PARKS & WILDLIFE

GSBS
7291 GLENVIEW DRIVE
FORT WORTH, TX 76180
P 817.589.1722
GSBSARCHITECTS.COM
REGISTRATION NO. BR2865

# EISENHOWER STATE PARK
RESTROOM REPLACEMENT
PROJECT NUMBER: 1210136

DATE: 2021–01–22
DESIGNED BY: NP
DRAWN BY: AB
REVIEWED BY: DJ
REVISED:
REVISED:
REVISED:

SHEET TITLE
CIVIL DETAILS

SHEET NAME
C802

A L-101 LANDSCAPE PLAN
SCALE: 1" = 20'-0"

**NOTES:**

INSTALL TREE PROTECTION FENCING PRIOR TO START OF DEMOLITION WORK

ASSUMED LIMIT OF DISTURBANCE SHOWN.

CONTRACTOR RESPONSIBLE FOR REVEGETATING TO ACTUAL LIMIT AND IN ALL DISTURBED OR GRADED AREAS.

CONTRACTOR RESPONSIBLE FOR IRRIGATING ALL LANDSCAPED AREAS ACCORDING TO THE MAINTENANCE / WATERING WARRANTY INSTRUCTIONS.

## PLANT SCHEDULE

| GROUND COVERS | CODE | BOTANICAL / COMMON NAME | CONT | SPACING | QTY |
|---|---|---|---|---|---|
| | | NATIVE SEED MIX<br>PLANTING PERIOD 1: YEAR ROUND<br>PLANTING PERIOD 2: 1 OCT THROUGH 15 MARCH | | | 2,598 |
| | BOU DAC | BOUTELOUA DACTYLOIDES / BUFFALO GRASS<br>PLANTING PERIOD 1 | SEED | | 416 S |
| | CHA FAS | CHAMAECRISTA FASCICULATA / PARTRIDGE PEA<br>PLANTING PERIOD 1 | SEED | | 208 S |
| | ELY CAN | ELYMUS CANADENSIS / CANADA WILD RYE<br>PLANTING PERIOD 1 | SEED | | 1,507 |
| | LEP GRE | LEPTOCHLOA DUBIA / GREEN SPRANGLETOP<br>PLANTING PERIOD 1 | SEED | | 52 SF |
| | SCH LIT | SCHIZACHYRIUM SCOPARIUM / LITTLE BLUESTEM GRASS<br>PLANTING PERIOD 1 | SEED | | 416 S |
| | SEC CE2 | SECALE CEREALE / WINTER RYE<br>PLANTING PERIOD 2 | SEED | | 2,598 |
| | CYN DAC | CYNODON DACTYLON / BERMUDA GRASS | SOLID SOD | | 7,633 |

01/22/2021
SIGNATURE DATE


OWNERSHIP OF INSTRUMENTS OF SERVICE AND COPYRIGHT
ALL REPORTS, PLANS, SPECIFICATIONS, COMPUTER FILES, FIELD DATA, NOTES, AND OTHER DOCUMENTS AND INSTRUMENTS PREPARED BY GSBS/ARCHITECTS INC. AS INSTRUMENTS OF SERVICE SHALL REMAIN THE PROPERTY OF GSBS. GSBS SHALL RETAIN ALL COMMON LAW, STATUTORY AND OTHER RESERVED RIGHTS, INCLUDING THE COPYRIGHT THERETO. ANY PUBLIC COMMUNICATION OR DISTRIBUTION OF THIS DRAWING IS PROHIBITED WITHOUT THE WRITTEN AUTHORIZATION OF GSBS.


TEXAS PARKS & WILDLIFE


GSBS ARCHITECTS
7291 GLEVIEW DRIVE
FORT WORTH, TX 76180
P 817.589.1722
GSBSARCHITECTS.COM
REGISTRATION NO. BR2895


# EISENHOWER STATE PARK

RESTROOM REPLACEMENT
PROJECT NUMBER: 1210136

DATE: 21-01-22
DESIGNED BY: NP
DRAWN BY: NS
REVIEWED BY: SG
REVISED:
REVISED:
REVISED:

SHEET TITLE
LANDSCAPE PLAN

SHEET NUMBER
L101

## GENERAL NOTES:

1. THE CONTRACTOR IS RESPONSIBLE FOR REGULAR WEEDING, MOWING, IRRIGATION, FERTILIZING, PRUNING AND OTHER MAINTENANCE OF ALL PLANTINGS UNTIL PROJECT ACCEPTANCE. THE REQUIRED LANDSCAPING MUST BE MAINTAINED IN HEALTHY GROWING CONDITION AT ALL TIMES. SOD SHALL BE ROOTED TO THE GROUND AND ESTABLISHED PRIOR TO PROJECT ACCEPTANCE.

2. ALL LANDSCAPED AREAS AS INDICATED SHALL BE IRRIGATED BY THE CONTRACTOR UNDER A MAINTENANCE / WATERING WARRANTY.

3. LAYOUT TO BE VERIFIED IN FIELD BY LANDSCAPE ARCHITECT OR THE OWNER'S REPRESENTATIVE PRIOR TO INSTALLATION.

4. ANY ADJUSTMENTS NECESSARY FOR INSTALLATION OF THIS DESIGN SHALL BE APPROVED BY LANDSCAPE ARCHITECT OR OWNER'S REPRESENTATIVE PRIOR TO CONSTRUCTION.

5. INSTALLATION MUST BE INSPECTED AND APPROVED BY THE APPROPRIATE OFFICIALS .

6. APPLICABLE REFERENCES / STANDARDS / SPECIFICATIONS:
* AMERICAN JOINT COMMITTEE OF HORTICULTURAL NOMENCLATURE - STANDARDIZED PLANT NAMES, SECOND EDITION, 1942.
* AMERICAN NURSERY AND LANDSCAPE ASSOCIATION: AMERICAN STANDARD OF NURSERY STOCK, 2004.

7. SHOULD EXISTING UTILITIES OR IRRIGATION SYSTEM BE DAMAGED OR DISTURBED DURING CONSTRUCTION, NOTIFY LANDSCAPE ARCHITECT OR OWNER'S REPRESENTATIVE AND PROPER AUTHORITIES FOR RESTORATION. THE CONTRACTOR SHALL BE RESPONSIBLE FOR ALL REPAIR EXPENSES.

8. ALL LAWN AREAS SHALL BE FINE GRADED TO PROVIDE POSITIVE DRAINAGE.

9. REMOVE ALL EXPOSED STONES AND DEBRIS GREATER THAN 1/2" IN DIAMETER.

10. PLANT SIZE, TYPE AND CONDITION ARE SUBJECT TO APPROVAL BY THE LANDSCAPE ARCHITECT OR OWNER'S REPRESENTATIVE, WHO RESERVES THE RIGHT TO REJECT ANY UNACCEPTABLE PLANT MATERIAL.

11. CONTRACTOR SHALL GUARANTEE ALL PLANTS FOR ONE YEAR FROM DATE OF WRITTEN FINAL ACCEPTANCE BY LANDSCAPE ARCHITECT OR OWNER'S REPRESENTATIVE.

12. GUARANTEE DEFINITION: AT ANY AND ALL TIMES THROUGHOUT THE YEAR (WITHIN TWO WEEKS OF NOTIFICATION BY OWNER / LANDSCAPE ARCHITECT), ALL DEAD PLANTS (EXCEPT THOSE DEAD DUE TO OWNER NEGLECT) AND ALL THOSE DETERMINED NOT TO BE IN A NORMAL, VIGOROUS GROWING CONDITION, ARE TO BE REPLACED WITH SIMILAR SIZE AND TYPE PLANTS AT NO EXPENSE TO OWNER. REPAIR OR REPLACE OTHER DAMAGED PLANTS, LAWNS OR IRRIGATION SYSTEMS CAUSED DURING PLANT INSTALLATION OR REPLACEMENT AT NO EXPENSE TO OWNER.

13. UNLESS OTHERWISE DIRECTED BY LANDSCAPE ARCHITECT OR OWNER'S REPRESENTATIVE, ALL PLANT MATERIAL SHALL BE NURSERY STOCK ONLY. LANDSCAPE ARCHITECT OR OWNER'S REPRESENTATIVE RESERVES THE RIGHT TO INSPECT PLANT SOURCE AND TAG ACCEPTABLE PLANT MATERIAL.

14. CONTRACTOR SHALL BE RESPONSIBLE FOR WATERING AND MAINTENANCE OF ALL PLANT MATERIAL UNTIL DATE OF FINAL ACCEPTANCE BY LANDSCAPE ARCHITECT OR OWNER'S REPRESENTATIVE. CONTRACTOR SHALL CLEAN JOB SITE AT THE CONCLUSION OF EACH WORKDAY UNTIL DATE OF FINAL ACCEPTANCE.

15. ALL MATERIALS SHALL BE NEW AND UNUSED.

## SOD PROCEDURE:

1. REMOVE FOREIGN MATERIALS, WEEDS, AND UNDESIRABLE PLANTS AND THEIR ROOTS.

2. REMOVE CONTAMINATED SUBSOIL.

3. LOOSEN SURFACE SOIL TO A DEPTH OF AT LEAST 1 INCH. APPLY SOIL AMENDMENTS AND FERTILIZERS. TILL SOIL TO A HOMOGENEOUS MIXTURE OF FINE TEXTURE.

4. FERTILIZER: FERTILIZER SHALL BE 10-5-5 AND SHALL BE DISTRIBUTED UNIFORMLY AT THE RATE OF ONE THOUSAND (1,000) POUNDS PER ACRE (25 LB./1,000 S.F.) OVER THE AREAS INDICATED TO BE SODED. FERTILIZER SHALL BE APPLIED WITHIN 14 DAYS OF THE INSTALLATION OF THE SOD.

5. THE FINISH GRADE SHALL BE A SMOOTH, UNIFORM SURFACE PLANE WITHIN $\pm\frac{1}{2}$ INCH OF FINISH ELEVATION. ROLL AND RAKE, REMOVE RIDGES AND FILL DEPRESSIONS TO MEET FINISH GRADES.

6. THE SOD SHALL BE DELIVERED TO THE SITE AND INSTALLED WITHIN 48 HOURS OF BEING CUT AT THE FARM.

7. THE FRESHLY INSTALLED SOD SHALL BE WATERED IMMEDIATELY FOLLOWING INSTALLATION TO INSURE PROPER SOIL AND SOD MOISTURE. WATER SOD WITH A TEMPORARY IRRIGATION SYSTEM AND MAINTAIN SODDED AREAS UNTIL PROJECT ACCEPTANCE. ACCEPTABLE GRASS SOD SHALL BE WELL ESTABLISHED AND EXHIBIT A VIGOROUS GROWING CONDITION FOR TWO CUTTINGS.

8. NO SOD SHALL BE INSTALLED WHEN AIR OR SOIL TEMPTERATURES ARE BELOW 32 DEGREES FAHRENHEIT.

9. RE-SODDING THE LANDSCAPE ARCHITECT OR OWNER'S REPRESENTATIVE WILL DESIGNATE AREAS TO BE REPLANTED. AREAS ON WHICH A STAND OF GROWING GRASS IS NOT PRESENT IN A REASONABLE LENGTH OF TIME SHALL BE PREPARED AND RE-SODDING AS SPECIFIED FOR ORIGINAL PLANTING AT NO COST TO OWNER. A STAND SHALL BE DEFINED AS LIVE GRASS PLANTS FROM SOD COVERING NOT LESS THAN 90% OF ANY 10' X 10' AREA. REPLANTING REQUIRED BECAUSE OF FAULTY OPERATIONS OR NEGLIGENCE ON THE PART OF THE CONTRACTOR SHALL BE PERFORMED WITHOUT COST TO THE OWNER.

## NATIVE SEEDING PROCEDURE:

1. REMOVE FOREIGN MATERIALS, WEEDS, AND UNDESIRABLE PLANTS AND THEIR ROOTS.

2. REMOVE CONTAMINATED SUBSOIL.

3. LOOSEN SURFACE SOIL TO A DEPTH OF AT LEAST 1 INCH. APPLY SOIL AMENDMENTS AND FERTILIZERS. TILL SOIL TO A HOMOGENEOUS MIXTURE OF FINE TEXTURE.

4. BROADCAST SEED MIXTURE WITH SPREADER OR SEEDING MACHINE AT THE SPECIFIED RATES OVER ALL AREAS INDICATED ON THE PLANS.

6. LIGHTLY HARROW RAKE ALL SEEDED AREAS INTO TOP $\frac{3}{8}$" OF SOIL. ROLL LIGHTLY TO ENSURE CONTACT WITH SOIL. WATER WITH FINE SPRAY.

7. PROTECT SEEDED AREAS WITH 1" LAYER OF CRIMPED HAY AND LIGHTLY TAMP.

## NATIVE SEED SELECTION SCHEDULE

LANDSCAPE CONTRACTOR IS RESPONSIBLE FOR VERIFYING ALL PLANT COUNTS TO INSURE COMPLETE COVERAGE OF AREAS INDICATED IN PLANTING PLANS. LANDSCAPE CONTRACTOR IS RESPONSIBLE FOR FOR THE MAINTENANCE OF ALL PLANT MATERIAL AND PLANTING BEDS UNTIL FINAL ACCEPTANCE BY THE OWNER. MAINTENANCE TO INCLUDE WATERING, PRUNING, WEED REMOVAL, INSECT CONTROL, DISEASE CONTROL, AS WELL AS ANYTHING NORMALLY REQUIRED TO MAINTAIN PLANT MATERIAL IN A HEALTHY, GROWING CONDITION

| | | |
|---|---|---|
| 1. PLANTING PERIOD 15 NOVEMBER THROUGH 15 JUNE | | |
| Kind of Seed: Canada Wild Rye (Elymus canadensis) | Minimum % Pure: Live Seed Required: 82% | Pounds Of Live Seed Required Per Acre:(10 lbs/ac) |
| Kind of Seed: Little Bluestem (Schizachyrium scoparium) | Minimum % Pure: Live Seed Required: 82% | Pounds Of Live Seed Required Per Acre:(2.8 lbs/ac) |
| Kind of Seed: Green Sprangletop (Leptochloa dubia) | Minimum % Pure: Live Seed Required: 82% | Pounds Of Live Seed Required Per Acre:(.4 lbs/ac) |
| Kind of Seed: Buffalograss (Bouteloua dactyloides) | Minimum % Pure: Live Seed Required: 82% | Pounds Of Live Seed Required Per Acre:(2.8 lbs/ac) |
| Kind of Seed: Partridge Pea (Chamaecrista fasciculata) | Minimum % Pure: Live Seed Required: 82% | Pounds Of Live Seed Required Per Acre:(1.3 lbs/ac) |
| 2. PLANTING PERIOD: 1 OCTOBER THROUGH 15 MARCH | | |
| Kind of Seed: Cereal Rye Grain (Secale cereale) | Minimum % Pure: Live Seed Required: 82% | Pounds Of Live Seed Required Per Acre: (25 lbs/ac) |

Note: % Pure Live Seed = % Purity (% Germimation + % Hard Seed) divided by 100. Weed seed shall not exceed 10% by weight of the total pure live seed and other material in the mixture. Johnson grass, nutgrass or other noxious weed seed will not be allowed.

REGISTERED LANDSCAPE ARCHITECT
SAMUEL THEISS JONES
1893
STATE OF TEXAS

01/22/2021
SIGNATURE DATE

OWNERSHIP OF INSTRUMENTS OF SERVICE AND COPYRIGHT
ALL REPORTS, PLANS, SPECIFICATIONS, COMPUTER FILES, FIELD DATA, NOTES, AND OTHER DOCUMENTS AND INSTRUMENTS PREPARED BY GSBS/SKEMDIRECT INC. AS INSTRUMENTS OF SERVICE SHALL REMAIN THE PROPERTY OF GSBS. GSBS SHALL RETAIN ALL COMMON LAW, STATUTORY AND OTHER RESERVED RIGHTS, INCLUDING THE COPYRIGHT THERETO. ANY PUBLIC COMMUNICATION OR DISTRIBUTION OF THIS DRAWING IS PROHIBITED WITHOUT THE WRITTEN AUTHORIZATION OF GSBS.

TEXAS PARKS & WILDLIFE

GSBS ARCHITECTS
7291 GLEVIEW DRIVE
FORT WORTH, TX 76180
P 817.569.1772
GSBSARCHITECTS.COM
REGISTRATION NO. BR2895

# EISENHOWER STATE PARK

RESTROOM REPLACEMENT
PROJECT NUMBER: 1210136

DATE: 21-01-22
DESIGNED BY: NP
DRAWN BY: NS
REVIEWED BY: SG
REVISED:
REVISED:
REVISED:

SHEET TITLE
LANDSCAPE NOTES

SHEET NUMBER
L601

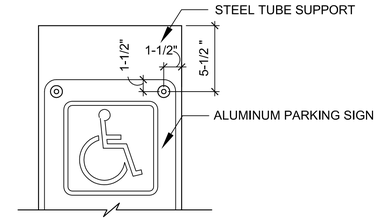


4 PARKING SIGN BOLT

NTS

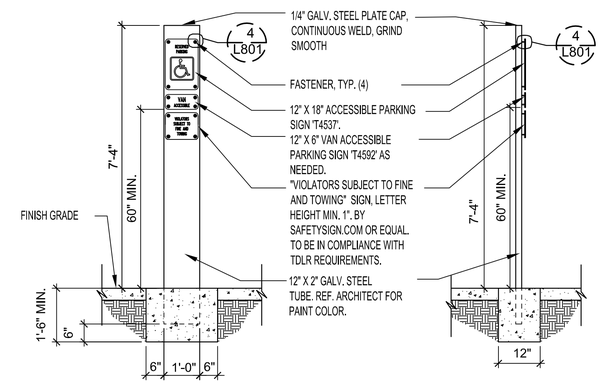


3 ACCESSIBLE PARKING SIGN

1/2" = 1'-0"

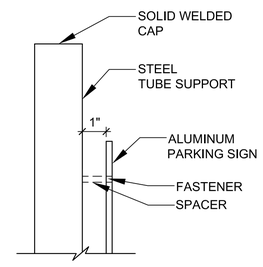


5 PARKING SIGN FASTENER

NTS

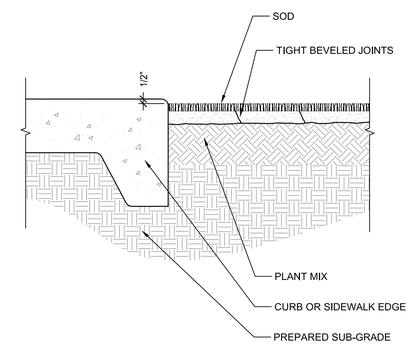


2 SOD INSTALLATION

NTS

PROJ-MU-EIS-17

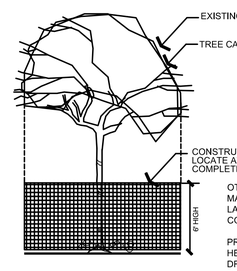


OTHER PROTECTION MEASURES MAY BE SUBMITTED TO THE LANDSCAPE ARCHITECT FOR CONSIDERATION.

PROVIDE TRUNK PROTECTION TO A HEIGHT OF 6' ABOVE GRADE WHERE DRIP LINE FENCING IS NOT POSSIBLE.

PROVIDE PHYSICAL PROTECTION TO INSURE NO SCARRING OR OTHER DAMAGE IS DONE TO THE BARK OR TRUNK.

1 TREE PROTECTION

NTS

TREE PRESERVATION NOTES

1. Trees called out for preservation shall be fenced at the dripline. Fencing may occur at the combined driplines of trees to be preserved.
2. Fencing shall be 6-foot tall chain link fencing with steel posts imbedded in the ground.
3. No grading shall occur within the driplines / fenced area of existing trees.
4. No construction materials or construction vehicles may be stored within the driplines / fencing areas of existing trees.
5. Construction vehicles or machinery may not pass between two or more existing trees identified for preservation if their canopies are within 10 feet of touching.
6. Tree preservation measures must be in place before construction, demolition and /or grading activities commence.
7. The contractor is required to have an arborist certified by the International Society of Arboriculture (ISA) on site, if site construction efforts require removal of existing roots or branch pruning. A certified arborist shall be on site and monitor all root pruning and branch pruning of existing trees.
8. Unauthorized tree removal is subject to in-kind replacement equal to the mature resource lost.
9. The Contractor is required to water, fertilize and attend to other maintenance needs of existing trees as needed to maintain healthy growth throughout the construction period. Six feet diameter, minimum, by six-inch tall earth berms shall be constructed at the base of each tree to function as temporary watering basins during the construction period. Trees shall be watered according to weather and tree requirements.

PROJ-MU-EIS-01

01/22/2021

SIGNATURE DATE

OWNERSHIP OF INSTRUMENTS OF SERVICE AND COPYRIGHT
ALL REPORTS, PLANS, SPECIFICATIONS, COMPUTER FILES, FIELD DATA, NOTES, AND OTHER DOCUMENTS AND INSTRUMENTS PREPARED BY GSBS/SUBCONSULTANTS INC. AS INSTRUMENTS OF SERVICE SHALL REMAIN THE PROPERTY OF GSBS. GSBS SHALL RETAIN ALL COMMON LAW, STATUTORY AND OTHER RESERVED RIGHTS, INCLUDING THE COPYRIGHT THERETO. ANY PUBLIC COMMUNICATION OR DISTRIBUTION OF THIS DRAWING IS PROHIBITED WITHOUT THE WRITTEN AUTHORIZATION OF GSBS.

TEXAS PARKS & WILDLIFE

GSBS ARCHITECTS
7291 GLEVIEW DRIVE
FORT WORTH, TX 76180
P 817.498.1172
GSBSARCHITECTS.COM
REGISTRATION NO. BR2895

# EISENHOWER STATE PARK

RESTROOM REPLACEMENT

PROJECT NUMBER: 1210136

| | |
|---|---|
| DATE: | 21-01-22 |
| DESIGNED BY: | NP |
| DRAWN BY: | NS |
| REVIEWED BY: | SG |
| REVISED: | |
| REVISED: | |
| REVISED: | |

SHEET TITLE

LANDSCAPE DETAILS

SHEET NUMBER

L801

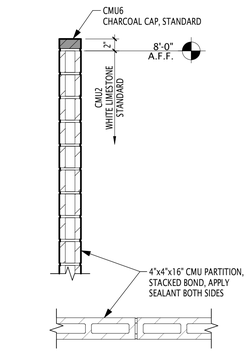


10 A111 WALL TYPE B5C
1" = 1'-0"

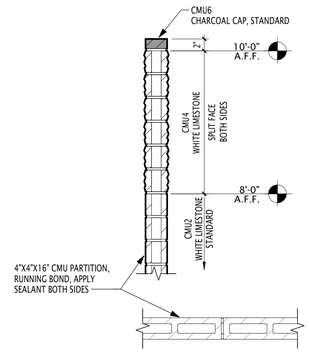


9 A111 WALL TYPE B5B
1" = 1'-0"

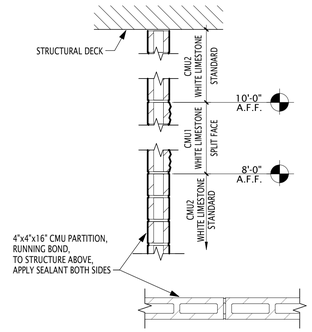


8 A111 WALL TYPE B5A
1" = 1'-0"

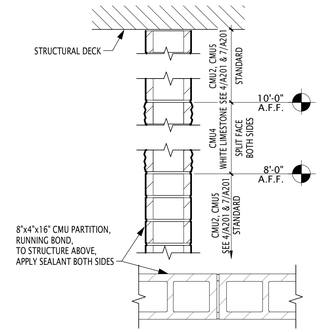


7 A111 WALL TYPE B2C
1" = 1'-0"

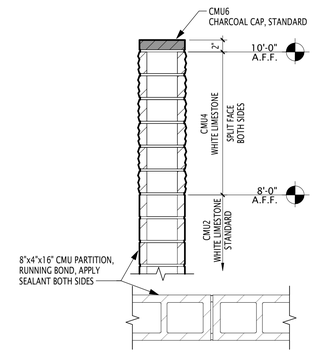


6 A111 WALL TYPE B2B
1" = 1'-0"

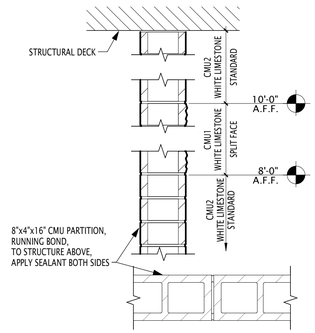


5 A111 WALL TYPE B2A
1" = 1'-0"

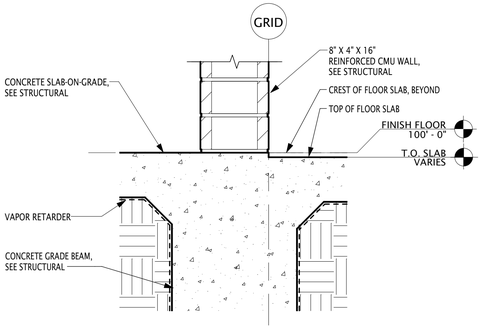


4 A111 WALL BASE AT BREEZEWAY
1 1/2" = 1'-0"

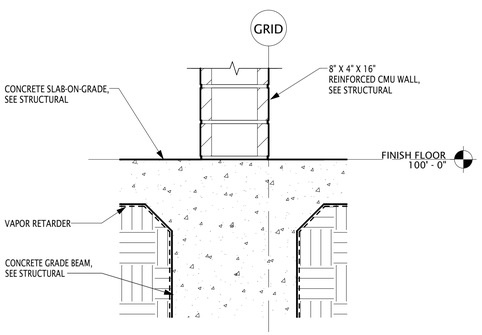


3 A111 WALL BASE AT BREEZEWAY
1 1/2" = 1'-0"

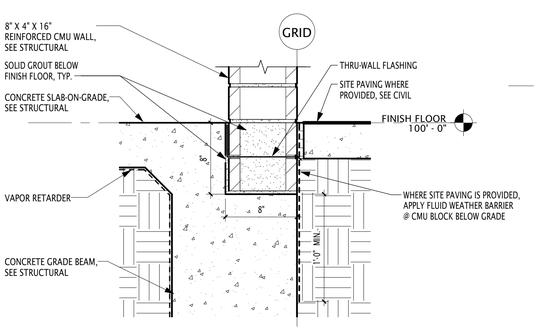


2 A111 WALL BASE AT SLAB EDGE, TYP.
1 1/2" = 1'-0"

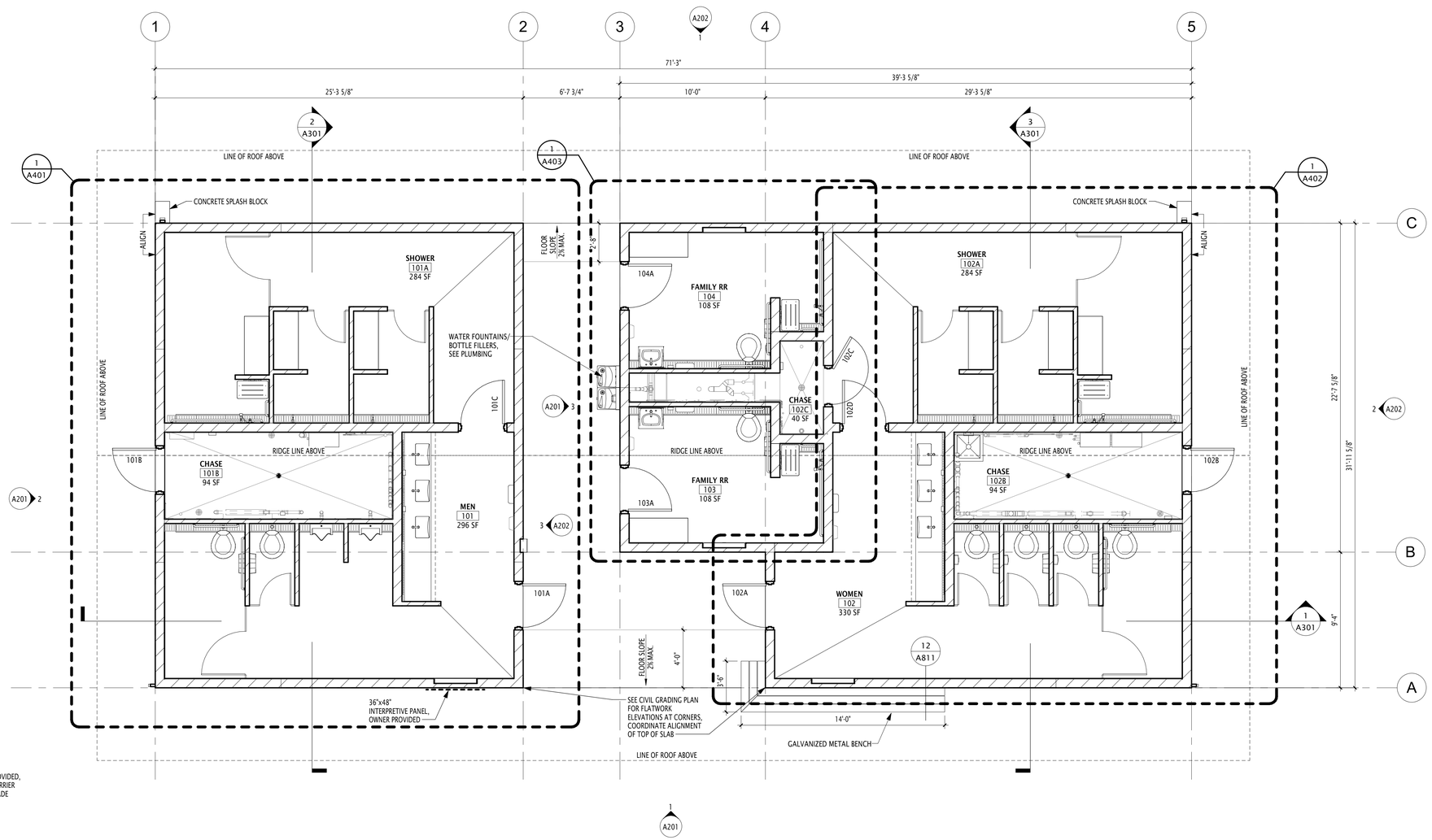


1 A111 FLOOR & WALL TYPES PLAN
1/4" = 1'-0"

01/22/2021
SIGNATURE DATE

OWNERSHIP OF INSTRUMENTS OF SERVICE AND COPYRIGHT.
ALL REPORTS, PLANS, SPECIFICATIONS, COMPUTER FILES, FIELD DATA, NOTES, AND OTHER DOCUMENTS AND INSTRUMENTS PREPARED BY CSBS.BATWHORST INC. AS INSTRUMENTS OF SERVICE SHALL REMAIN THE PROPERTY OF CSBS. CSBS SHALL RETAIN ALL COMMON LAW, STATUTORY AND OTHER RESERVED RIGHTS, INCLUDING THE COPYRIGHT THERETO. ANY PUBLIC COMMUNICATION OR DISTRIBUTION OF THIS DRAWING IS PROHIBITED WITHOUT THE WRITTEN AUTHORIZATION OF CSBS.

## WALL TYPES NOTES

1. ALL WALL DIMENSIONS SHOWN ON DRAWINGS ARE TO FACE OF CMU UNLESS NOTED OTHERWISE.
2. WALL TYPE TO CONTINUE AT DOOR & WINDOW OPENINGS (TOP & BOTTOM) U.N.O.
3. U.N.O. USE CEMENT BOARD AT ALL WET WALL LOCATIONS, TYP. INCLUDING BUT NOT LIMITED TO BATHROOM WALLS, WALLS WITH TILE OR STONE FINISH.
4. PROVIDE BLOCKING IN WALLS & CEILINGS AS REQUIRED FOR INSTALLATION OF MECH., PLUMB. & ELEC. EQUIP. AND SPECIALTIES.
5. REFERENCE STRUCTURAL DRAWINGS FOR REINFORCED WALL DETAILS.
6. PROVIDE SEALANT EACH SIDE OF ALL CMU BLOCKS AND TOP OF ALL WALLS TERMINATING BELOW DECK.

TEXAS PARKS & WILDLIFE

GSBS ARCHITECTS
7291 GLEVIEW DRIVE
FORT WORTH, TX 76180
P: 817 589 1722
GSBSARCHITECTS.COM
REGISTRATION NO. BR2895

# EISENHOWER STATE PARK

**RESTROOM REPLACEMENT**

PROJECT NUMBER: 1210136

DATE: 21-01-22
DESIGNED BY: NP
DRAWN BY: CJ
REVIEWED BY: SG
REVISED:
REVISED:
REVISED:

**SHEET TITLE**
FLOOR & WALL TYPES PLAN

SHEET NUMBER
**A111**

PROJECT NORTH

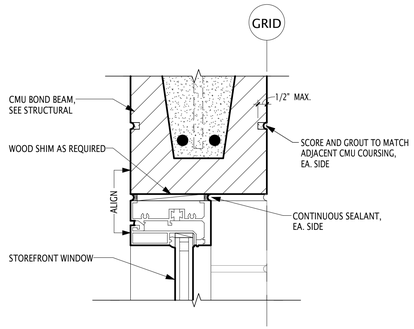


6 A112 ALUM STOREFRONT HEAD
3" = 1'-0"

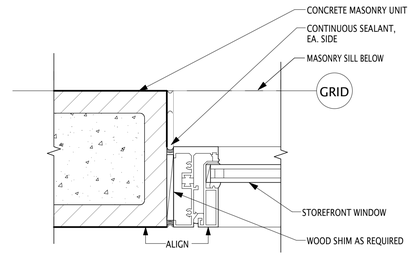


5 A112 ALUM STOREFRONT JAMB
3" = 1'-0"

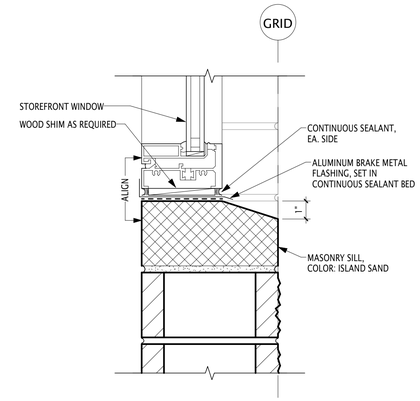


4 A112 ALUM STOREFRONT SILL
3" = 1'-0"

**GLAZING TYPES**
H - INSULATED FLOAT GLASS - FROSTED
J - INSULATED TEMPERED GLASS - FROSTED

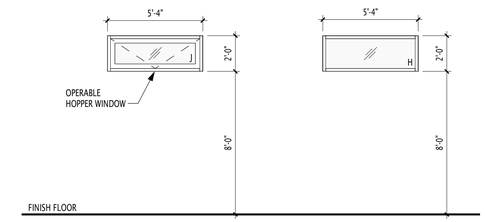


3 A112 W2
1/4" = 1'-0"

2 A112 W1
1/4" = 1'-0"

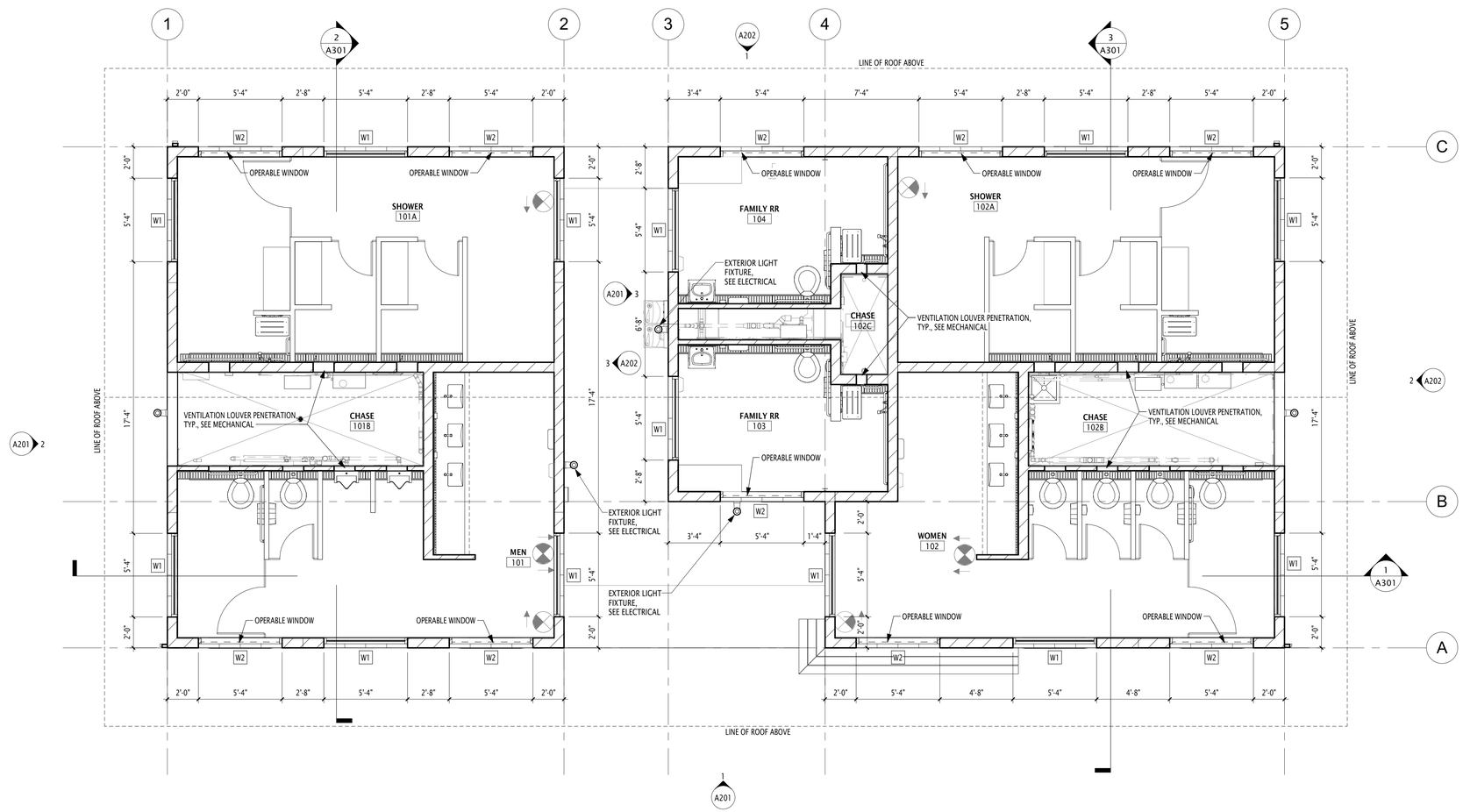


1 A112 CLERESTORY PLAN
1/4" = 1'-0"

PROJECT NORTH

REGISTERED ARCHITECT
NICHOLAS A. PALLUTH
24770
STATE OF TEXAS

01/22/2021
SIGNATURE DATE

OWNERSHIP OF INSTRUMENTS OF SERVICE AND COPYRIGHT
ALL REPORTS, PLANS, SPECIFICATIONS, COMPUTER FILES, FIELD DATA, NOTES, AND OTHER DOCUMENTS AND INSTRUMENTS PREPARED BY GSBS/BATENHORST INC. AS INSTRUMENTS OF SERVICE SHALL REMAIN THE PROPERTY OF GSBS. GSBS SHALL RETAIN ALL COMMON LAW, STATUTORY AND OTHER RESERVED RIGHTS, INCLUDING THE COPYRIGHT THERETO. ANY PUBLIC COMMUNICATION OR DISTRIBUTION OF THIS DRAWING IS PROHIBITED WITHOUT THE WRITTEN AUTHORIZATION OF GSBS.

TEXAS PARKS & WILDLIFE

GSBS ARCHITECTS
7291 GLEVIEW DRIVE
FORT WORTH, TX 76180
P 817.589.1722
GSBSARCHITECTS.COM
REGISTRATION NO. BR2895

# EISENHOWER STATE PARK

**RESTROOM REPLACEMENT**
PROJECT NUMBER: 121013 6

DATE: 21-01-22
DESIGNED BY: NP
DRAWN BY: CJ
REVIEWED BY: SG
REVISED:
REVISED:
REVISED:

**SHEET TITLE**
CLERESTORY PLAN AND DETAILS

SHEET NUMBER
**A112**

# SIGNAGE SCHEDULE

| ## DOOR #/ ROOM # | ROOM NAME | COPY TEXT | BRAILLE TEXT | COPY TEXT SIZE | TEXT COLOR | SIGN TYPE | HEIGHT | WIDTH | MOUNTING HEIGHT | MOUNTING TYPE | MOUNTING STANDOFF | ADDITIONAL NOTES | QTY. |
|---|---|---|---|---|---|---|---|---|---|---|---|---|---|
| - | EXTERIOR | PER OWNER | PER OWNER | PER OWNER | PER OWNER | S3 | 3' - 0" | 4' - 0" | 5' - 0" | SEE 1/A201 | SEE 1/A201 | 1 | 1 |
| 101A | MEN | MEN | MEN | 3/4" | WHITE | S1 | 8" | 8" | 4' - 6" | A | 8" | | 1 |
| 101B | CHASE | UTILITY | UTILITY | 3/4" | WHITE | S2 | 6" | 8" | 4' - 6" | A | 8" | | 1 |
| 101C | SHOWER | SHOWERS | SHOWERS | 3/4" | WHITE | S2 | 6" | 8" | 4' - 6" | A | 8" | | 1 |
| 102A | WOMEN | WOMEN | WOMEN | 3/4" | WHITE | S1 | 8" | 8" | 4' - 6" | A | 8" | | 1 |
| 102B | CHASE | UTILITY | UTILITY | 3/4" | WHITE | S2 | 6" | 8" | 4' - 6" | A | 8" | | 1 |
| 102C | CHASE | UTILITY | UTILITY | 3/4" | WHITE | S2 | 6" | 8" | 4' - 6" | A | 8" | | 1 |
| 102D | SHOWER | SHOWERS | SHOWERS | 3/4" | WHITE | S2 | 6" | 8" | 4' - 6" | A | 8" | | 1 |
| 103A | FAMILY RR | FAMILY | FAMILY | 3/4" | WHITE | S1 | 8" | 8" | 4' - 6" | A | 8" | | 1 |
| 104A | FAMILY RR | FAMILY | FAMILY | 3/4" | WHITE | S1 | 8" | 8" | 4' - 6" | A | 8" | | 1 |

NOTES:
1. OWNER FURNISHED, CONTRACTOR INSTALLED

# SIGNAGE LEGEND

S# ROOM / CODE SIGNAGE

S# INTERPRETIVE PANEL

# GENERAL NOTES

A. MOUNTING HEIGHT AND STANDOFF MEASURED TO CENTER OF SIGN UNLESS NOTED OTHERWISE.
B. FURNISH: TO SUPPLY, DELIVER, UNLOAD, AND INSPECT FOR DAMACE.
INSTALL: TO UNPACK, ASSEMBLE ERECT, APPLY, PLACE, FINISH, CURE, PROTECT, CLEAN, START UP, AND MAKE READY FOR USE.
PROVIDE: TO FURNISH AND INSTALL.

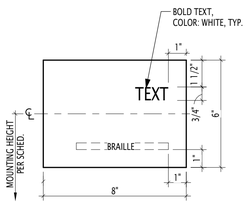


TYPE S2 - 1/4 " ETCHED
ALUMINUM BACKGROUND
COLOR: MATTE BLACK
NOTE: TOTAL WIDTH MAY EXCEED WIDTH OF 8" DUE TO COPY TEXT REQUIRED.

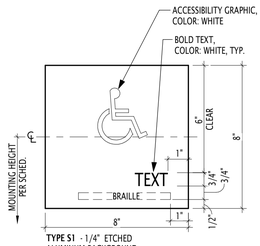


TYPE S1 - 1/4" ETCHED
ALUMINUM BACKGROUND
COLOR: MATTE BLACK

## 2 / A121 SIGN TYPES
3" = 1'-0"

# SCHEDULED FINISHES

| - | DESCRIPTION | MANUFACTURER | PRODUCT NAME / NUMBER | COLOR/ FINISH | SIZE | COMMENTS |
|---|---|---|---|---|---|---|
| WALL | | | | | | |
| CMU1 | CONCRETE MASONRY UNIT | BEST BLOCK | 700 WHITE LIMESTONE | SPLIT-FACE / STANDARD | SEE PLAN | |
| CMU2 | CONCRETE MASONRY UNIT | BEST BLOCK | 700 WHITE LIMESTONE | STANDARD | SEE PLAN | |
| CMU3 | CONCRETE MASONRY UNIT | BEST BLOCK | 300 ISLAND SAND | SPLIT-FACE / STANDARD | SEE PLAN | |
| CMU4 | CONCRETE MASONRY UNIT | BEST BLOCK | 700 WHITE LIMESTONE | SPLIT-FACE | SEE PLAN | |
| CMU5 | CONCRETE MASONRY UNIT | BEST BLOCK | 300 ISLAND SAND | STANDARD | SEE PLAN | |
| CMU6 | CONCRETE MASONRY UNIT | BEST BLOCK | 8P CHARCOAL | STANDARD | SEE PLAN | |
| FLOOR | | | | | | |
| EP1 | EPOXY FLOORING | DUR-A-FLEX | HYBRI-FLEX EQ | Q28-23 / ORANGE PEEL | - | |
| SC1 | SEALED CONCRETE | - | - | - | - | |
| MILLWORK | | | | | | |
| SU1 | SOLID SURFACE | CORIAN | - | DEEP SPACE | - | COUNTERTOPS AND BENCHES |
| MISC | | | | | | |
| P1 | PAINT | SHERWIN WILLIAMS | SW7069 IRON ORE | SEMI-GLOSS | - | DOOR AND FRAME PAINT; ALL EXPOSED STEEL |
| CEILING | | | | | | |
| D1 | WOOD CEILING | - | - | MATCH WILSONART WALNUT HEIGHTS 7965K-12 | - | WOOD CEILING STAIN |

# FINISH KEY

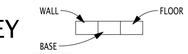


WALLS

CMU CONCRETE BLOCK/MASONRY UNIT

BASE

N/A

FLOOR

SC SEALED/ STAINED CONCRETE

EP EPOXY PAINT

MISC.

P1 PAINT

SU SOLID SURFACE COUNTERTOP

NOTES:

1. REFERENCE ELEVATIONS FOR HEIGHT AND LOCATIONS OF CMU BLOCK .
2. SHADED WALLS REPRESENT STACKING BOND OF CMU.

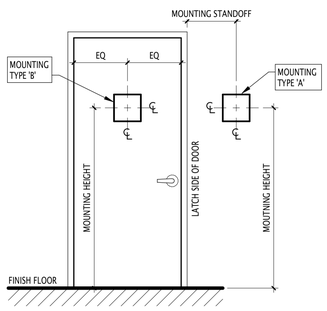


## 3 / A121 MOUNTING TYPES
1/2" = 1'-0"

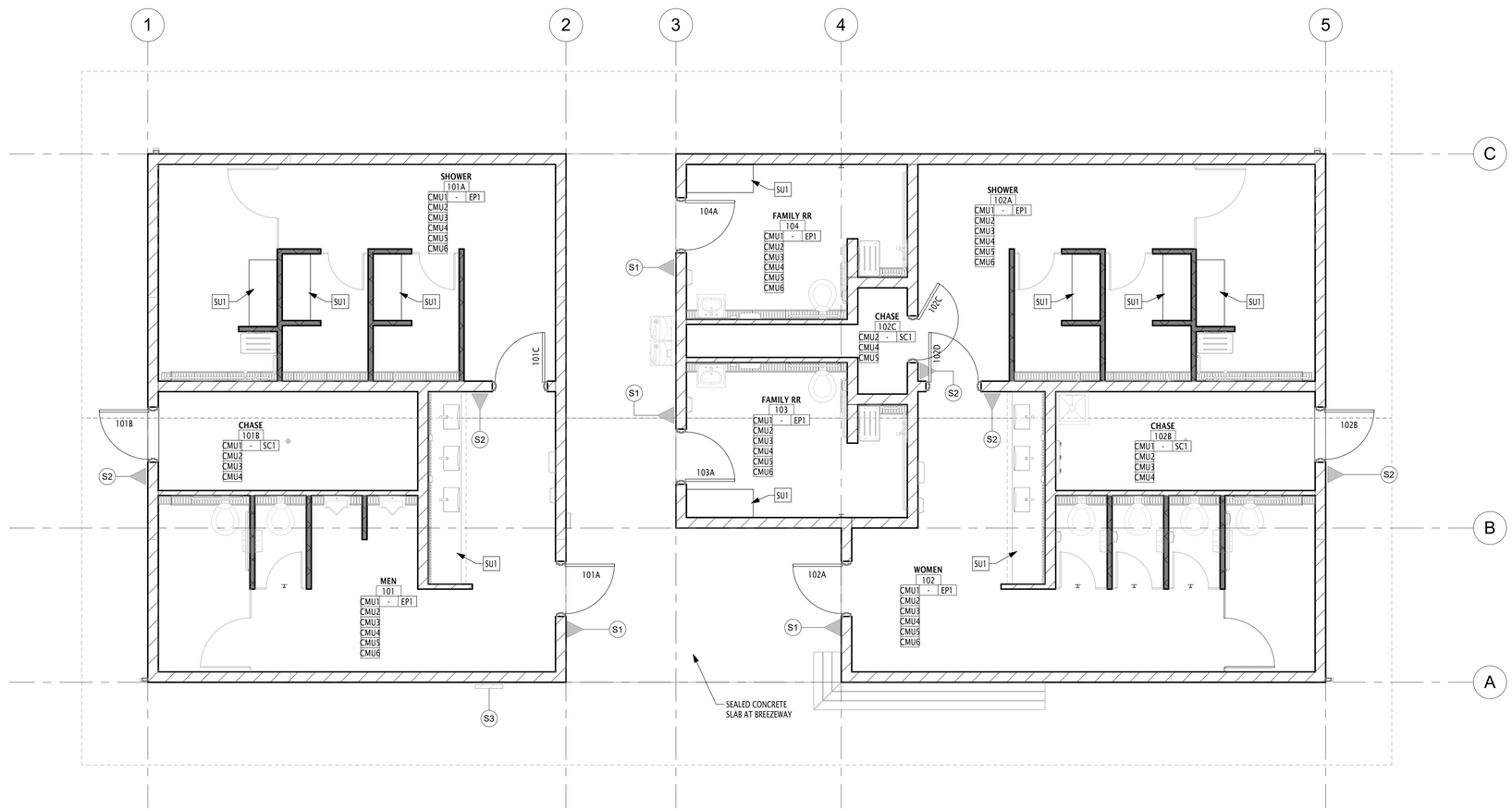


## 1 / A121 FINISH PLAN
1/4" = 1'-0"

PROJECT NORTH

REGISTERED ARCHITECT
NICHOLAS A. PALLUTH
24770
STATE OF TEXAS

01/22/2021
SIGNATURE DATE

OWNERSHIP OF INSTRUMENTS OF SERVICE AND COPYRIGHT
ALL REPORTS, PLANS, SPECIFICATIONS, COMPUTER FILES, FIELD DATA, NOTES, AND OTHER DOCUMENTS AND INSTRUMENTS PREPARED BY GSBS/BATENHORST INC. AS INSTRUMENTS OF SERVICE SHALL REMAIN THE PROPERTY OF GSBS. GSBS SHALL RETAIN ALL COMMON LAW, STATUTORY AND OTHER RESERVED RIGHTS, INCLUDING THE COPYRIGHT THERETO. ANY PUBLIC COMMUNICATION OR DISTRIBUTION OF THIS DRAWING IS PROHIBITED WITHOUT THE WRITTEN AUTHORIZATION OF GSBS.

TEXAS PARKS & WILDLIFE

GSBS ARCHITECTS
7291 GLEVIEW DRIVE
FORT WORTH, TX 76180
P 817 589 1722
GSBSARCHITECTS.COM
REGISTRATION NO. BR2895

# EISENHOWER STATE PARK
RESTROOM REPLACEMENT
PROJECT NUMBER: 1210136

DATE: 21-01-22
DESIGNED BY: NP
DRAWN BY: CJ
REVIEWED BY: SG
REVISED:
REVISED:
REVISED:

SHEET TITLE
FINISH AND SIGNAGE PLAN

SHEET NUMBER
A121

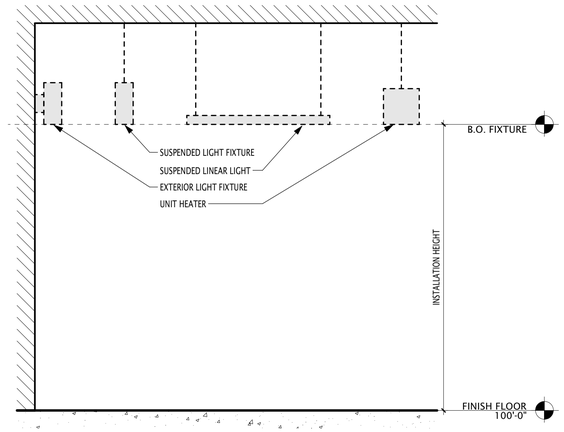


2 A131 FIXTURE INSTALLATION HEIGHT
1/2" = 1'-0"

## CEILING SCHEDULE

| TYPE | DESCRIPTION | PLAN |
|---|---|---|
| D1 | TONGUE-AND-GROOVE WOOD CEILING, STAIN AND SEAL | |
| E1 | EXPOSED STRUCTURE | |

## RCP LEGEND

| | |
|---|---|
| 100 / A / 9'-0" | ROOM # / CEILING TYPE / ELEVATION - FROM FINISH FLOOR |
| | SUSPENDED LINEAR LIGHT, SEE ELECTRICAL, INSTALL @ 10'-0" A.F.F. |
| | SUSPENDED LIGHT FIXTURE, SEE ELECTRICAL, INSTALL @ 10'-0" A.F.F. |
| UH | UNIT HEATER, SEE MECHANICAL, INSTALL @ 10'-0" A.F.F. |
| | EXTERIOR LIGHT FIXTURE, SEE ELECTRICAL, INSTALL @ 10'-4" A.F.F. |
| | WALL PARTITION BELOW, UNLESS NOTED OTHERWISE |

## CEILING NOTES

1. MECHANICAL AND ELECTRICAL DATA SHOWN FOR REFERENCE ONLY. COORDINATE WITH MECHANICAL AND ELECTRICAL DRAWINGS. ANY CONFLICTS SHOULD BE ADDRESSED WITH ARCHITECT AS SOON AS POSSIBLE.
2. PROVIDE BLOCKING IN WALLS & CEILINGS AS REQUIRED FOR INSTALLATION OF MECH., PLUMB. & ELEC. EQUIP. AND SPECIALTIES.

REGISTERED ARCHITECT
NICHOLAS A. PALLUTH
24770
STATE OF TEXAS

01/22/2021
SIGNATURE DATE

OWNERSHIP OF INSTRUMENTS OF SERVICE AND COPYRIGHT
ALL REPORTS, PLANS, SPECIFICATIONS, COMPUTER FILES, FIELD DATA, NOTES, AND OTHER DOCUMENTS AND INSTRUMENTS PREPARED BY GSBS/BATENHORST INC. AS INSTRUMENTS OF SERVICE SHALL REMAIN THE PROPERTY OF GSBS. GSBS SHALL RETAIN ALL COMMON LAW, STATUTORY AND OTHER RESERVED RIGHTS, INCLUDING THE COPYRIGHT THERETO. ANY PUBLIC COMMUNICATION OR DISTRIBUTION OF THIS DRAWING IS PROHIBITED WITHOUT THE WRITTEN AUTHORIZATION OF GSBS.

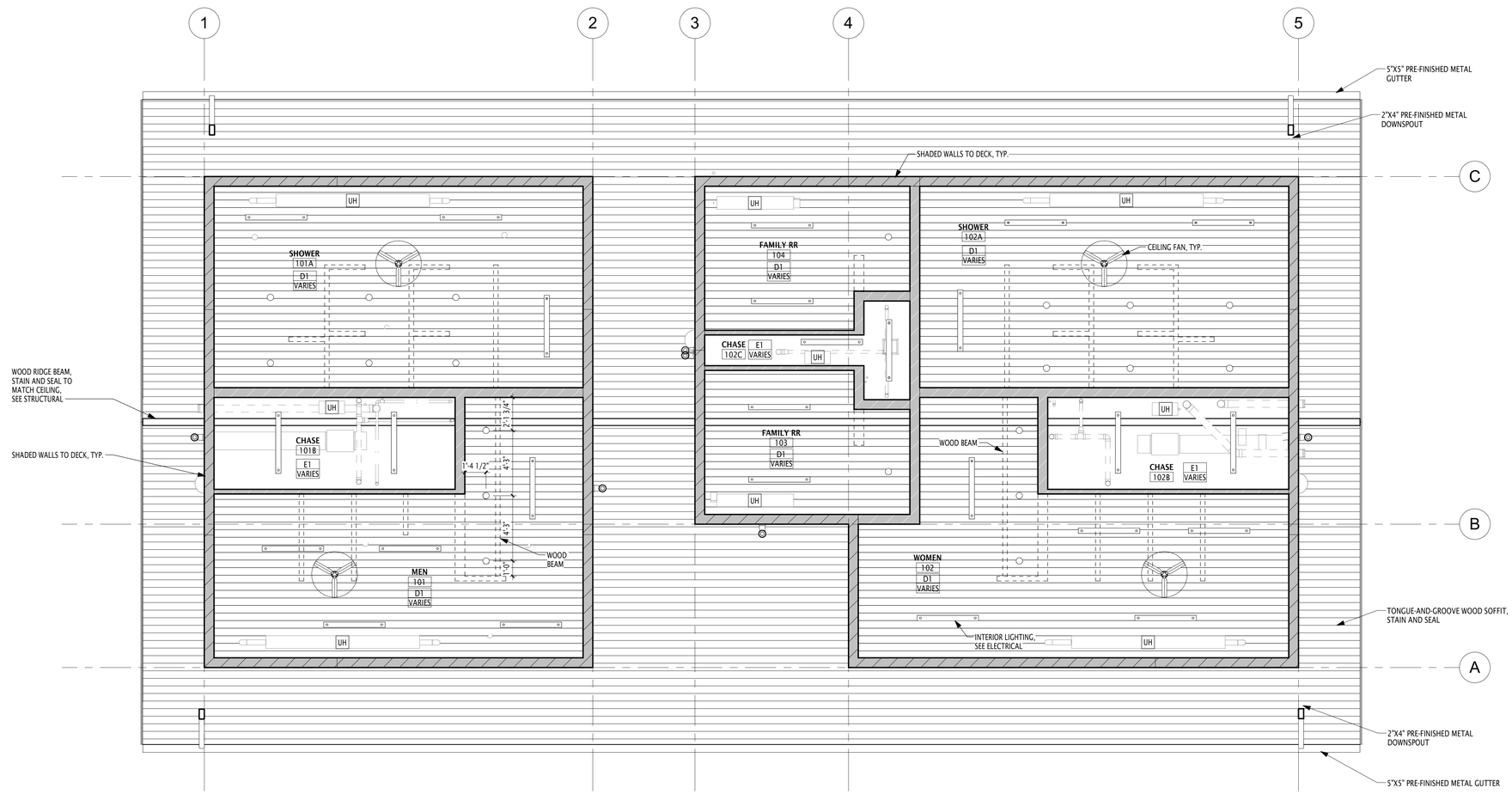


1 A131 REFLECTED CEILING PLAN
1/4" = 1'-0"

PROJECT NORTH

TEXAS PARKS & WILDLIFE

GSBS ARCHITECTS
7291 GLEVIEW DRIVE
FORT WORTH, TX 76180
P: 817 589 1722
GSBSARCHITECTS.COM
REGISTRATION NO. BR2895

# EISENHOWER STATE PARK

**RESTROOM REPLACEMENT**

PROJECT NUMBER: 1210136

DATE: 21-01-22
DESIGNED BY: NP
DRAWN BY: CJ
REVIEWED BY: SG
REVISED:
REVISED:
REVISED:

**SHEET TITLE**
REFLECTED CEILING PLAN

SHEET NUMBER
**A131**

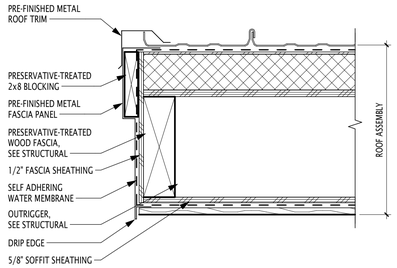


9 A141 ROOF DETAIL
1 1/2" = 1'-0"

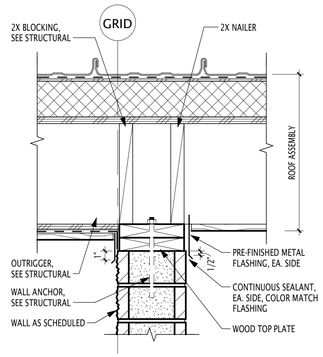


8 A141 ROOF DETAIL
1 1/2" = 1'-0"

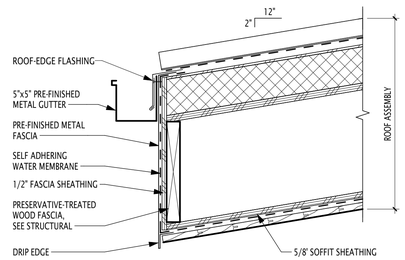


7 A141 ROOF DETAIL
1 1/2" = 1'-0"

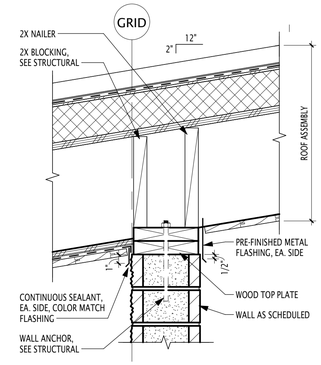


6 A141 ROOF DETAIL
1 1/2" = 1'-0"

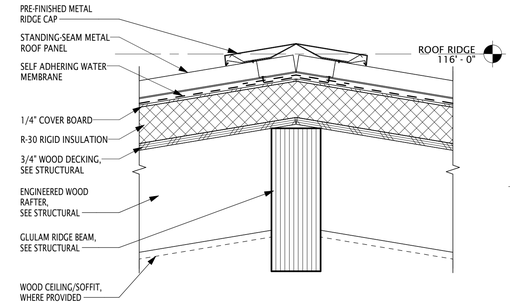


5 A141 ROOF DETAIL
1 1/2" = 1'-0"

REGISTERED ARCHITECT
NICHOLAS A. PALUTH
24770
STATE OF TEXAS

01/22/2021
SIGNATURE DATE

OWNERSHIP OF INSTRUMENTS OF SERVICE AND COPYRIGHT
ALL REPORTS, PLANS, SPECIFICATIONS, COMPUTER FILES, FIELD DATA, NOTES, AND OTHER DOCUMENTS AND INSTRUMENTS PREPARED BY CSBS.BATNHORST INC. AS INSTRUMENTS OF SERVICE SHALL REMAIN THE PROPERTY OF CSBS. CSBS SHALL RETAIN ALL COMMON LAW, STATUTORY AND OTHER RESERVED RIGHTS, INCLUDING THE COPYRIGHT THERETO. ANY PUBLIC COMMUNICATION OR DISTRIBUTION OF THIS DRAWING IS PROHIBITED WITHOUT THE WRITTEN AUTHORIZATION OF CSBS.

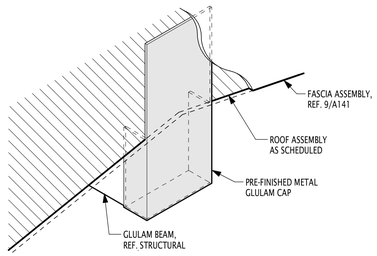


4 A141 RIDGE BEAM CAP DETAIL
3" = 1'-0"

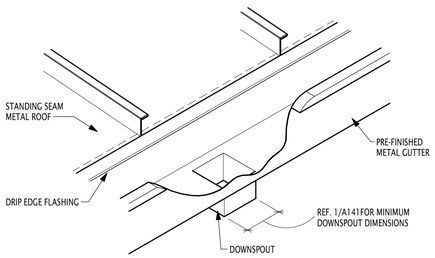


3 A141 CUTAWAY GUTTER DETAIL
1 1/2" = 1'-0"

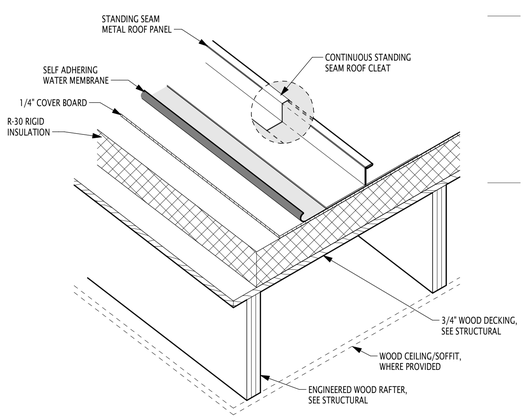


2 A141 CUTAWAY ROOF ASSEMBLY
1 1/2" = 1'-0"

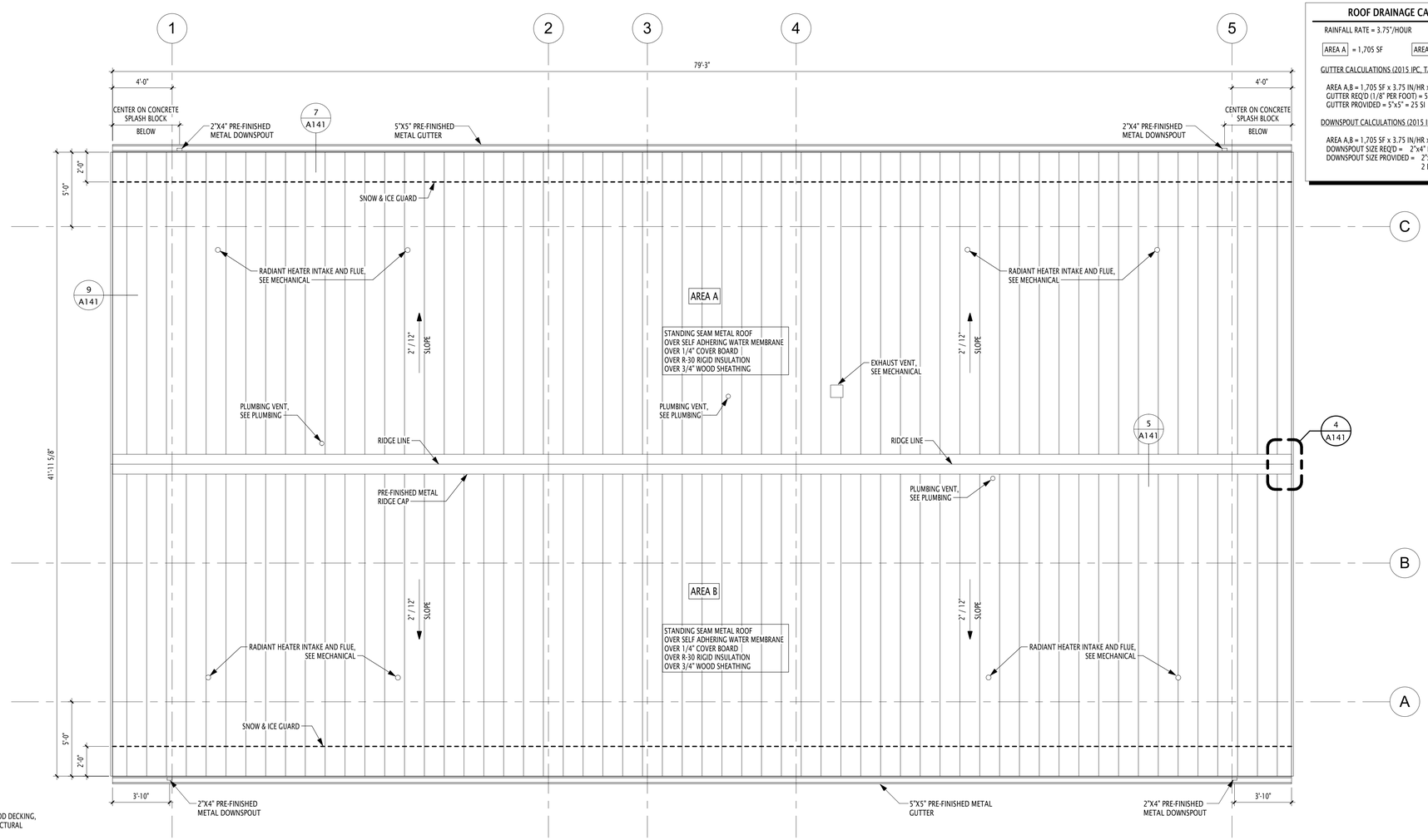


1 A141 ROOF PLAN
1/4" = 1'-0"

PROJECT NORTH

## ROOF DRAINAGE CALCULATIONS

RAINFALL RATE = 3.75"/HOUR

AREA A = 1,705 SF  AREA B = 1,705 SF

GUTTER CALCULATIONS (2015 IPC, TABLE 1106.6)

AREA A,B = 1,705 SF x 3.75 IN/HR x 0.01039 = 66.4 GPM
GUTTER REQ'D (1/8" PER FOOT) = 5" DIA. = 25 SI
GUTTER PROVIDED = 5"x5" = 25 SI

DOWNSPOUT CALCULATIONS (2015 IPC, TABLE 1106.3)

AREA A,B = 1,705 SF x 3.75 IN/HR x 0.01039 = 66.4 GPM
DOWNSPOUT SIZE REQ'D = 2"x4" PIPE
DOWNSPOUT SIZE PROVIDED = 2"x4" PIPE, 2 DOWNSPOUTS PER GUTTER

TEXAS PARKS & WILDLIFE

GSBS ARCHITECTS
7291 GLEVIEW DRIVE
FORT WORTH, TX 76180
817.589.1722
GSBSARCHITECTS.COM
REGISTRATION NO. BR2895

# EISENHOWER STATE PARK

RESTROOM REPLACEMENT
PROJECT NUMBER: 1210136

DATE: 21-01-22
DESIGNED BY: NP
DRAWN BY: CJ
REVIEWED BY: SG
REVISED:
REVISED:
REVISED:

SHEET TITLE
ROOF PLAN

SHEET NUMBER
A141

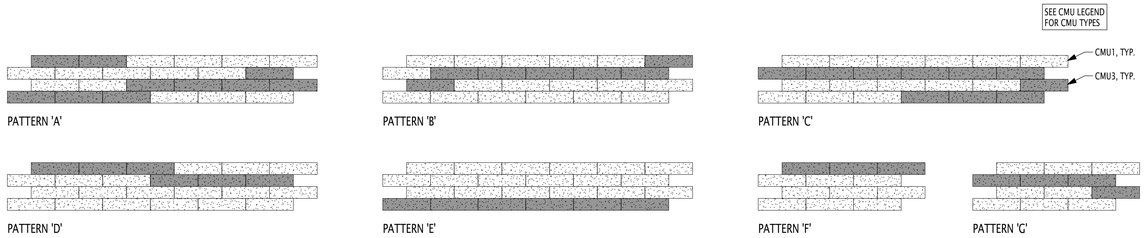


## 7 A201 WALL COURSING PATTERNS
1/2" = 1'-0"

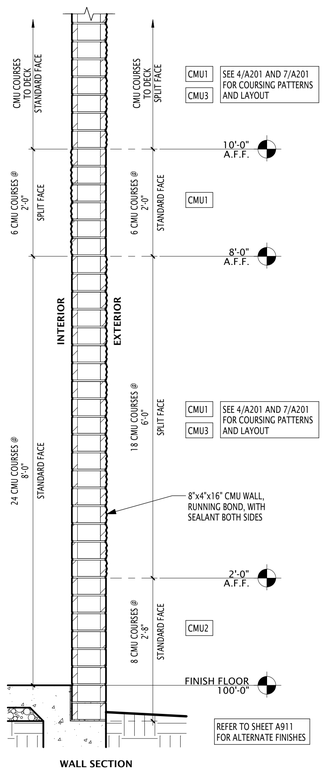


## 6 A201 TYP. EXTERIOR WALL
3/4" = 1'-0"

**COURSING PATTERN LAYOUT NOTES:**
1. BEGIN SEQUENCES AT GRID LINES 'C2' AND 'C5.'
2. ALTERNATE USE OF SEQUENCE 1 AND SEQUENCE 2 VERTICALLY TO ROOF DECK.
3. ALL SEQUENCES SHALL BEGIN WITH A DIFFERENT COURSING PATTERN.
4. SEQUENCES SHALL CONTINUE/WRAP AT WALL CORNERS.

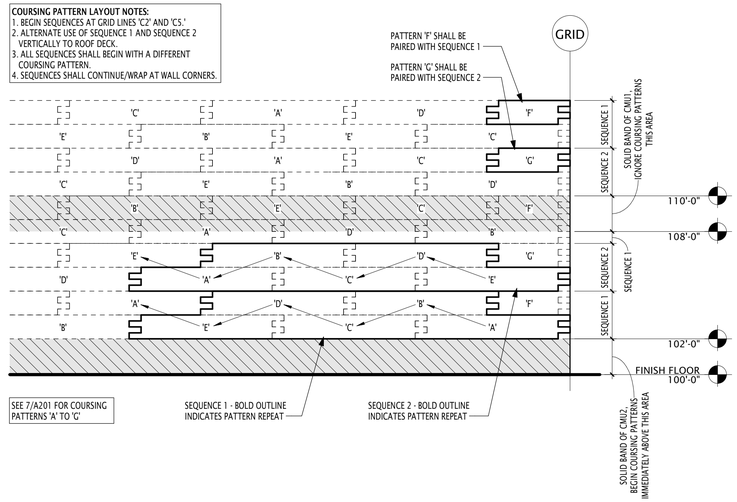


## 4 A201 TYPICAL COURSING PATTERN LAYOUT
1/4" = 1'-0"

**CONCRETE MASONRY UNIT (CMU) LEGEND**

| LABEL | COLOR | FINISH |
|---|---|---|
| CMU 1 | WHITE LIMESTONE | SPLIT-FACE / STANDARD |
| CMU 2 | WHITE LIMESTONE | STANDARD |
| CMU 3 | ISLAND SAND | SPLIT-FACE / STANDARD |

STANDARD CMU BLOCK OR NON-TEXTURED FACE OF SPLIT-FACE CMU BLOCK

TEXTURED FACE OF SPLIT-FACE CMU BLOCK

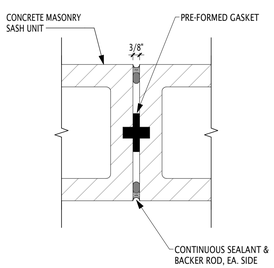


## 5 A201 CMU EXPANSION JOINT, TYP.
3" = 1'-0"

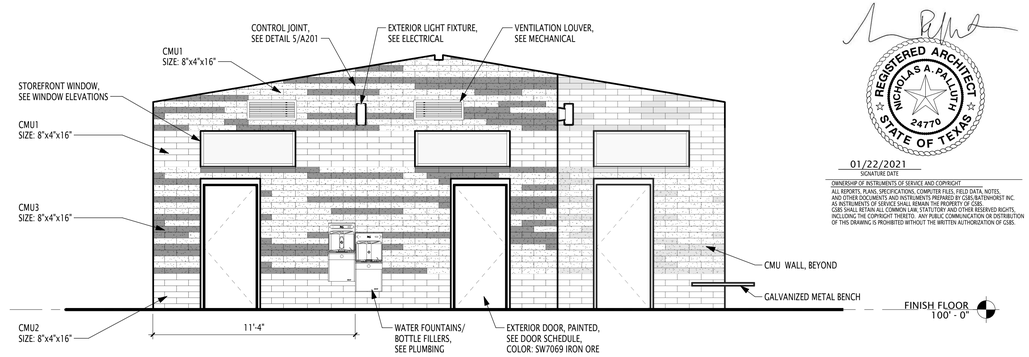


## 3 A201 ELEVATION - BREEZEWAY PLAN WEST
1/4" = 1'-0"

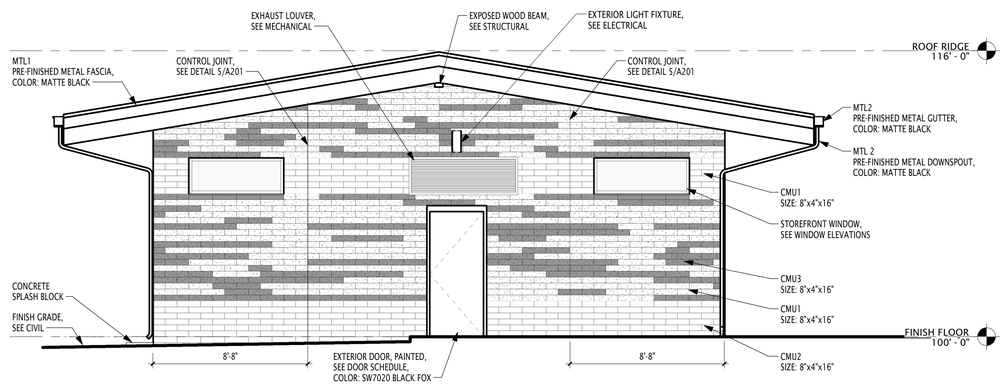


## 2 A201 ELEVATION - PLAN WEST
1/4" = 1'-0"

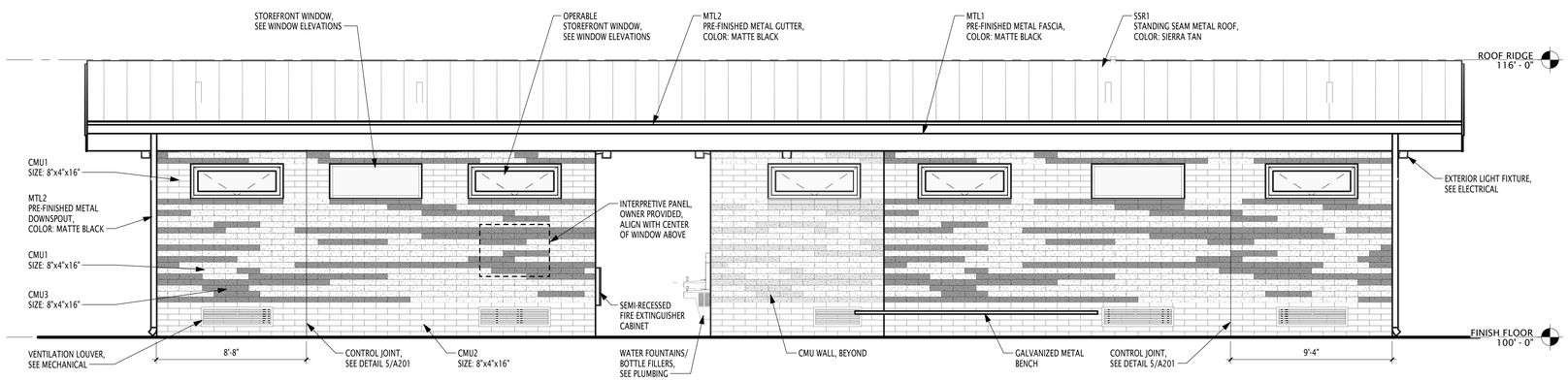


## 1 A201 ELEVATION - PLAN SOUTH
1/4" = 1'-0"

01/22/2021
SIGNATURE DATE

OWNERSHIP OF INSTRUMENTS OF SERVICE AND COPYRIGHT
ALL REPORTS, PLANS, SPECIFICATIONS, COMPUTER FILES, FIELD DATA, NOTES, AND OTHER DOCUMENTS AND INSTRUMENTS PREPARED BY GSBS/BATENHORST INC. AS INSTRUMENTS OF SERVICE SHALL REMAIN THE PROPERTY OF GSBS. GSBS SHALL RETAIN ALL COMMON LAW, STATUTORY AND OTHER RESERVED RIGHTS, INCLUDING THE COPYRIGHT THERETO. ANY PUBLIC COMMUNICATION OR DISTRIBUTION OF THIS DRAWING IS PROHIBITED WITHOUT THE WRITTEN AUTHORIZATION OF GSBS.

TEXAS PARKS & WILDLIFE

GSBS ARCHITECTS
7291 GLEVIEW DRIVE
FORT WORTH, TX 76180
P 817.589.1722
GSBSARCHITECTS.COM
REGISTRATION NO. BR2895

# EISENHOWER STATE PARK
**RESTROOM REPLACEMENT**
PROJECT NUMBER: 1210136

DATE: 21-01-22
DESIGNED BY: NP
DRAWN BY: CJ
REVIEWED BY: SG
REVISED:
REVISED:
REVISED:

**SHEET TITLE**
EXTERIOR ELEVATIONS

SHEET NUMBER
**A201**

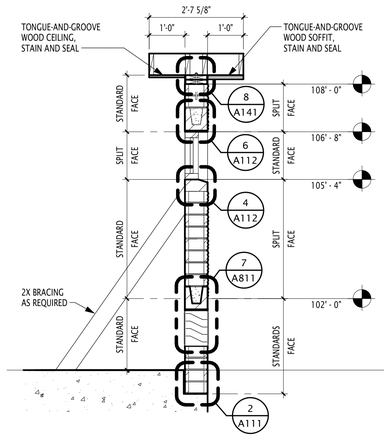


5 A202 MOCK-UP PANEL SECTION
1/2" = 1'-0"

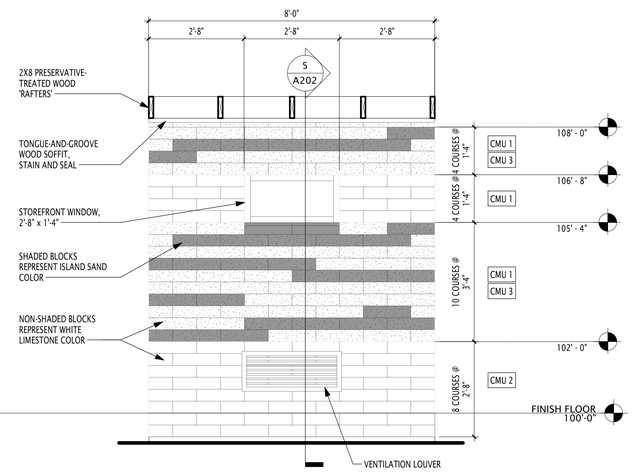


4 A202 MOCK-UP PANEL ELEVATION
1/2" = 1'-0"

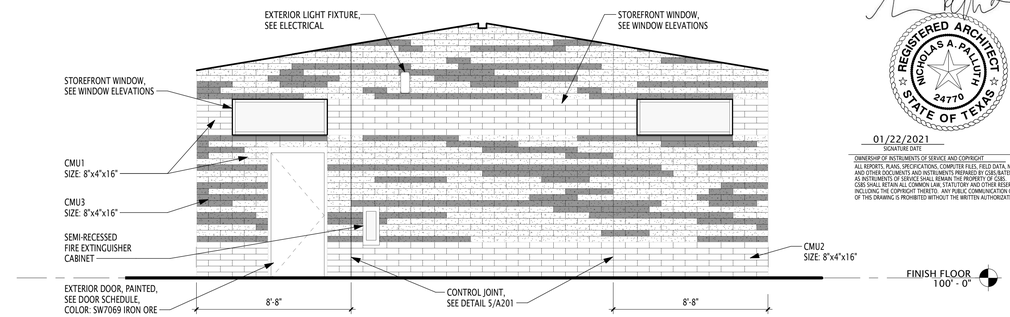


3 A202 ELEVATION - BREEZEWAY PLAN EAST
1/4" = 1'-0"

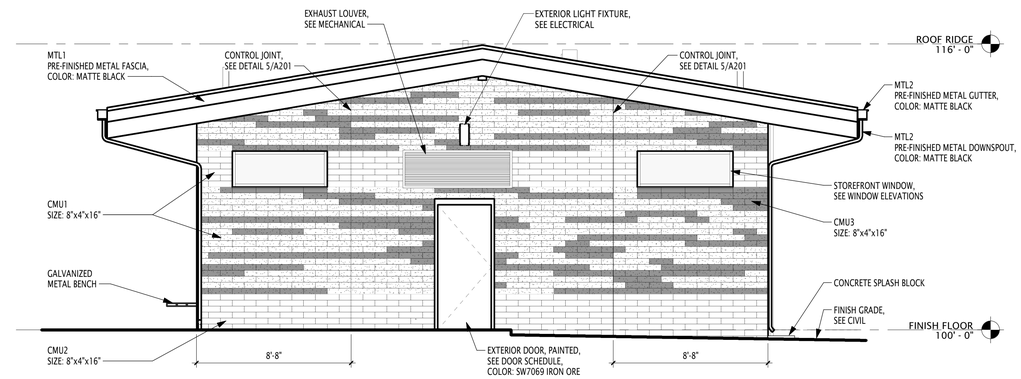


2 A202 ELEVATION - PLAN EAST
1/4" = 1'-0"

| CONCRETE MASONRY UNIT (CMU) LEGEND | | |
|---|---|---|
| LABEL | COLOR | FINISH |
| CMU 1 | WHITE LIMESTONE | SPLIT-FACE / STANDARD |
| CMU 2 | WHITE LIMESTONE | STANDARD |
| CMU 3 | ISLAND SAND | SPLIT-FACE / STANDARD |
| STANDARD CMU BLOCK OR NON-TEXTURED FACE OF SPLIT-FACE CMU BLOCK | | TEXTURED FACE OF SPLIT-FACE CMU BLOCK |

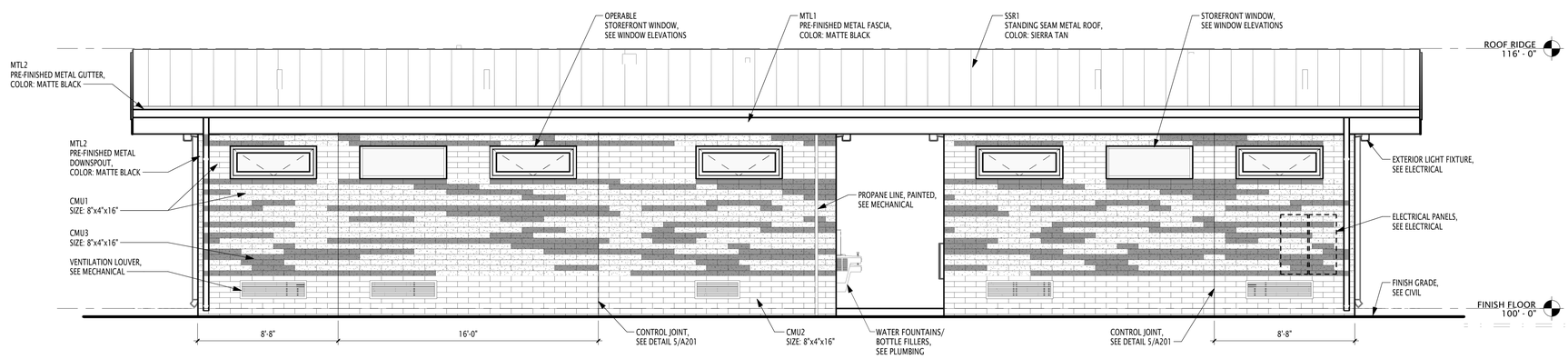


1 A202 ELEVATION - PLAN NORTH
1/4" = 1'-0"

REGISTERED ARCHITECT
NICHOLAS A. PALLUTH
24770
STATE OF TEXAS

01/22/2021
SIGNATURE DATE

OWNERSHIP OF INSTRUMENTS OF SERVICE AND COPYRIGHT
ALL REPORTS, PLANS, SPECIFICATIONS, COMPUTER FILES, FIELD DATA, NOTES, AND OTHER DOCUMENTS AND INSTRUMENTS PREPARED BY GSBS/BATWHORST INC. AS INSTRUMENTS OF SERVICE SHALL REMAIN THE PROPERTY OF GSBS. GSBS SHALL RETAIN ALL COMMON LAW, STATUTORY AND OTHER RESERVED RIGHTS, INCLUDING THE COPYRIGHT THERETO. ANY PUBLIC COMMUNICATION OR DISTRIBUTION OF THIS DRAWING IS PROHIBITED WITHOUT THE WRITTEN AUTHORIZATION OF GSBS.

TEXAS PARKS & WILDLIFE

GSBS ARCHITECTS
7291 GLEVIEW DRIVE
FORT WORTH, TX 76180
P: 817 589 1722
GSBSARCHITECTS.COM
REGISTRATION NO. BR2895

# EISENHOWER STATE PARK

RESTROOM REPLACEMENT
PROJECT NUMBER: 1210136

DATE: 21-01-22
DESIGNED BY: NP
DRAWN BY: CJ
REVIEWED BY: SG
REVISED:
REVISED:
REVISED:

SHEET TITLE
EXTERIOR ELEVATIONS

SHEET NUMBER
A202

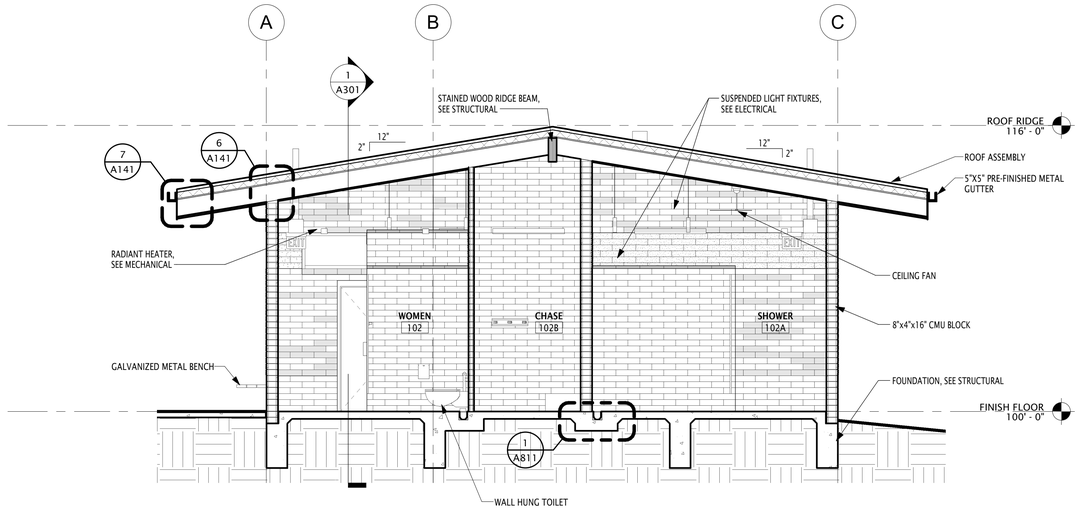


3 A301 WEST BUILDING SECTION - WOMEN
1/4" = 1'-0"

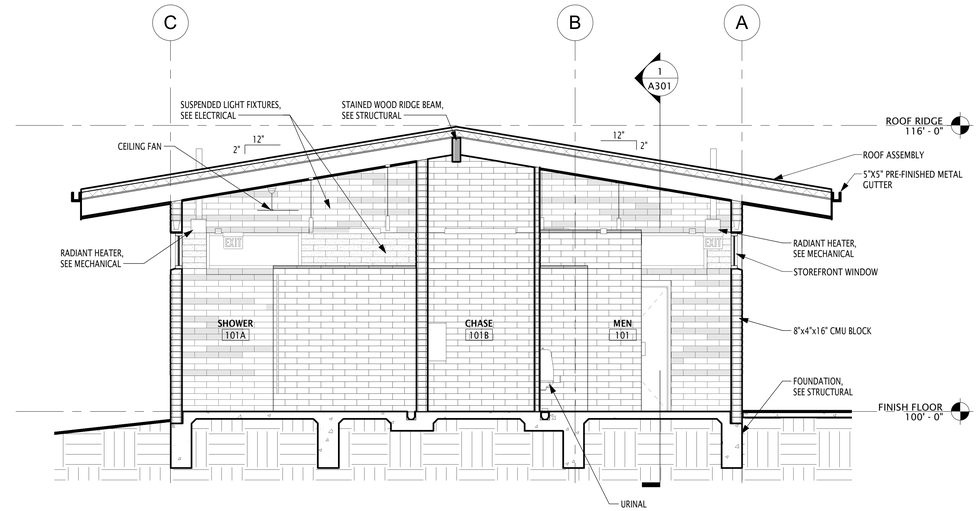


2 A301 EAST BUILDING SECTION - MEN
1/4" = 1'-0"

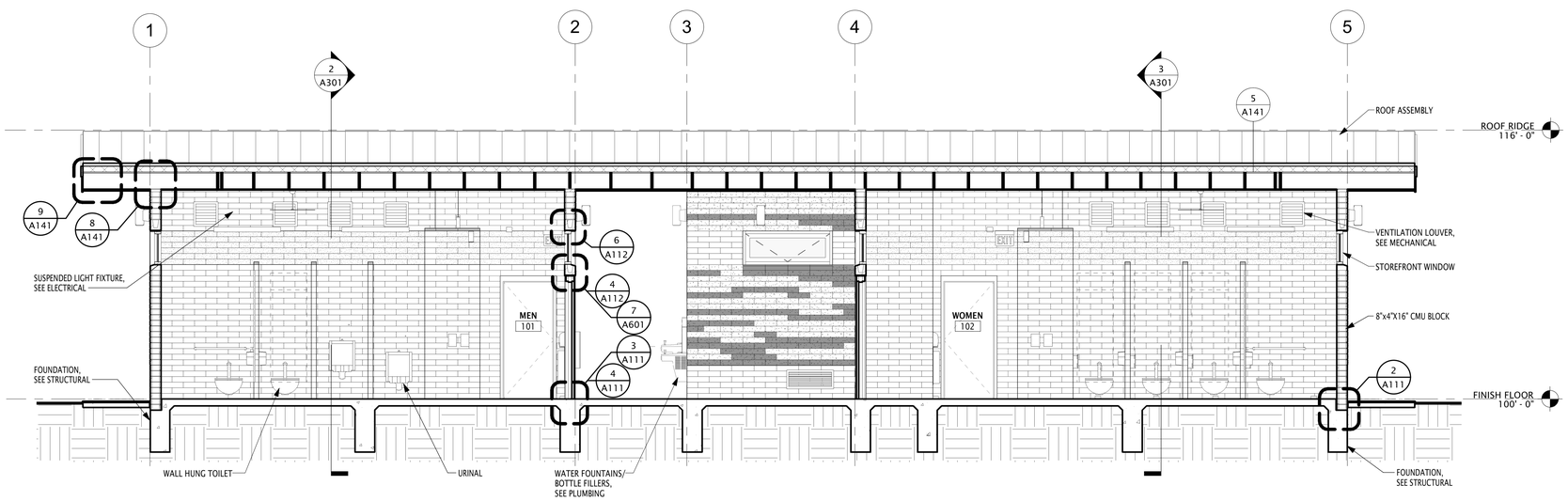


1 A301 NORTH BUILDING SECTION
1/4" = 1'-0"

01/22/2021
SIGNATURE DATE

OWNERSHIP OF INSTRUMENTS OF SERVICE AND COPYRIGHT
ALL REPORTS, PLANS, SPECIFICATIONS, COMPUTER FILES, FIELD DATA, NOTES, AND OTHER DOCUMENTS AND INSTRUMENTS PREPARED BY GSBS/BATENHORST INC. AS INSTRUMENTS OF SERVICE SHALL REMAIN THE PROPERTY OF GSBS. GSBS SHALL RETAIN ALL COMMON LAW, STATUTORY AND OTHER RESERVED RIGHTS, INCLUDING THE COPYRIGHT THERETO. ANY PUBLIC COMMUNICATION OR DISTRIBUTION OF THIS DRAWING IS PROHIBITED WITHOUT THE WRITTEN AUTHORIZATION OF GSBS.

TEXAS PARKS & WILDLIFE

GSBS ARCHITECTS
7291 GLENVIEW DRIVE
FORT WORTH, TX 76180
P 817 589 1722
GSBSARCHITECTS.COM
REGISTRATION NO. BR2895

# EISENHOWER STATE PARK

**RESTROOM REPLACEMENT**

PROJECT NUMBER: 1210136

DATE: 21-01-22
DESIGNED BY: NP
DRAWN BY: CJ
REVIEWED BY: SG
REVISED:
REVISED:
REVISED:

**SHEET TITLE**
BUILDING SECTIONS

SHEET NUMBER
**A301**

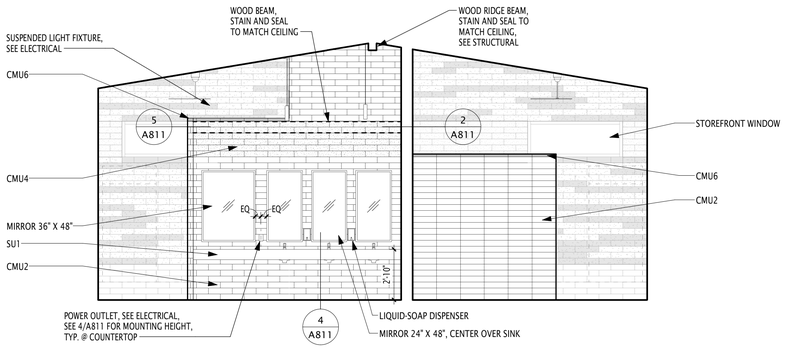


8 A401 MEN 101 - WEST ELEVATION
1/4" = 1'-0"

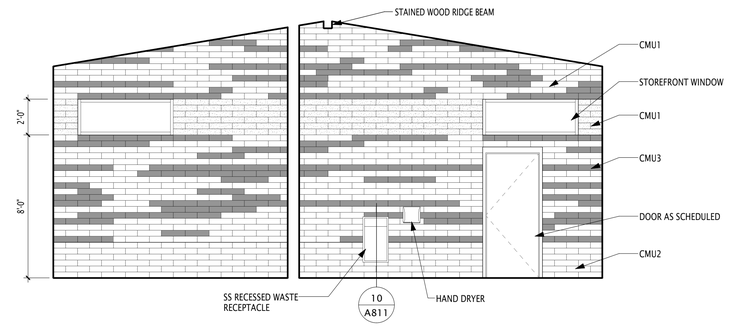


7 A401 MEN 101 - EAST ELEVATION
1/4" = 1'-0"

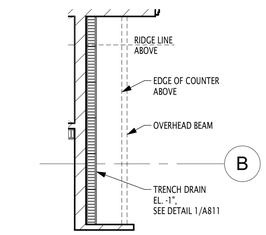


6 A401 LAV TRENCH DRAIN
1/4" = 1'-0"

**CONCRETE MASONRY UNIT (CMU) LEGEND**

| LABEL | COLOR | FINISH |
|---|---|---|
| CMU1 | WHITE LIMESTONE | SPLIT-FACE / STANDARD |
| CMU2 | WHITE LIMESTONE | STANDARD |
| CMU3 | ISLAND SAND | SPLIT-FACE / STANDARD |
| CMU4 | WHITE LIMESTONE | SPLIT-FACE |
| CMU5 | ISLAND SAND | STANDARD |
| CMU6 | CHARCOAL | STANDARD |

STANDARD CMU BLOCK OR NON-TEXTURED FACE OF SPLIT-FACE CMU BLOCK

TEXTURED FACE OF SPLIT-FACE CMU BLOCK

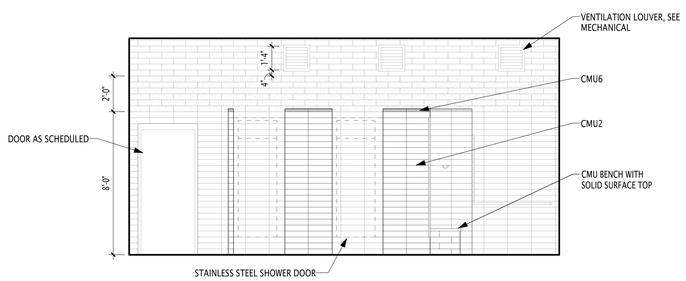


5 A401 SHOWER 101A - SOUTH ELEVATION
1/4" = 1'-0"

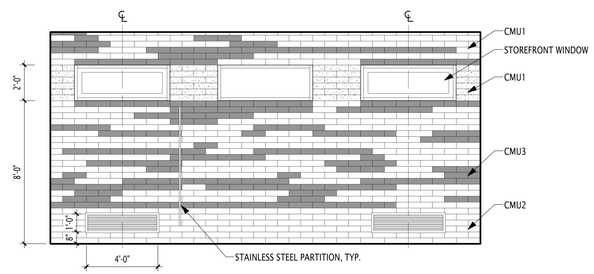


4 A401 SHOWER 101A - NORTH ELEVATION
1/4" = 1'-0"

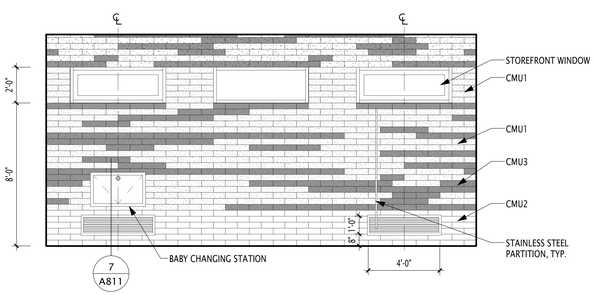


3 A401 MEN 101 - SOUTH ELEVATION
1/4" = 1'-0"

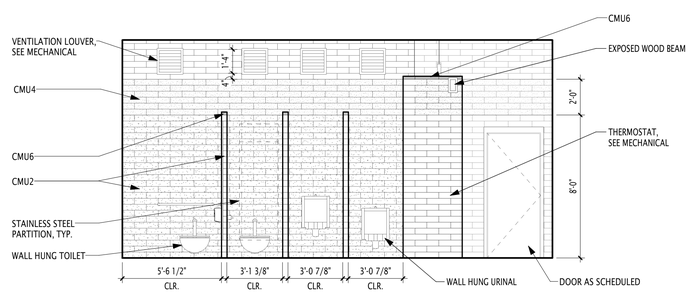


2 A401 MEN 101 - NORTH ELEVATION
1/4" = 1'-0"

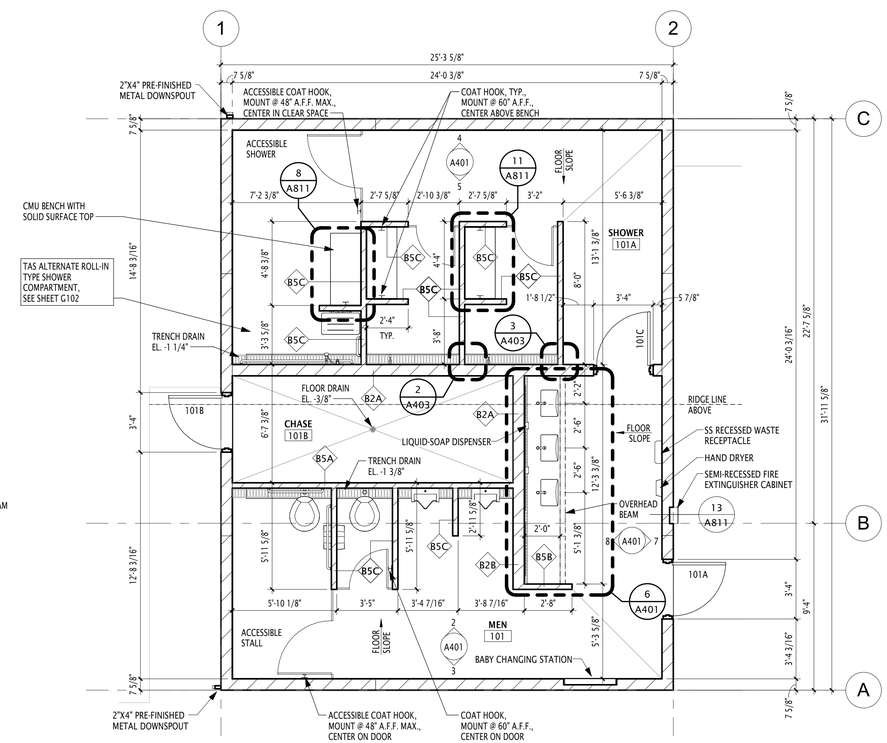


1 A401 ENLARGED FLOOR PLAN - MEN 101
1/4" = 1'-0"

PROJECT NORTH

01/22/2021
SIGNATURE DATE

OWNERSHIP OF INSTRUMENTS OF SERVICE AND COPYRIGHT
ALL REPORTS, PLANS, SPECIFICATIONS, COMPUTER FILES, FIELD DATA, NOTES, AND OTHER DOCUMENTS AND INSTRUMENTS PREPARED BY GSBS/BATENHORST INC. AS INSTRUMENTS OF SERVICE SHALL REMAIN THE PROPERTY OF GSBS. GSBS SHALL RETAIN ALL COMMON LAW, STATUTORY AND OTHER RESERVED RIGHTS, INCLUDING THE COPYRIGHT THERETO. ANY PUBLIC COMMUNICATION OR DISTRIBUTION OF THIS DRAWING IS PROHIBITED WITHOUT THE WRITTEN AUTHORIZATION OF GSBS.

TEXAS PARKS & WILDLIFE

GSBS ARCHITECTS
7291 GLEVIEW DRIVE
FORT WORTH, TX 76180
P 817 589.1722
GSBSARCHITECTS.COM
REGISTRATION NO. BR2895

# EISENHOWER STATE PARK

**RESTROOM REPLACEMENT**

PROJECT NUMBER: 1210136

DATE: 21-01-22
DESIGNED BY: NP
DRAWN BY: CJ
REVIEWED BY: SG
REVISED:
REVISED:
REVISED:

**SHEET TITLE**
MENS RESTROOM

SHEET NUMBER
**A401**

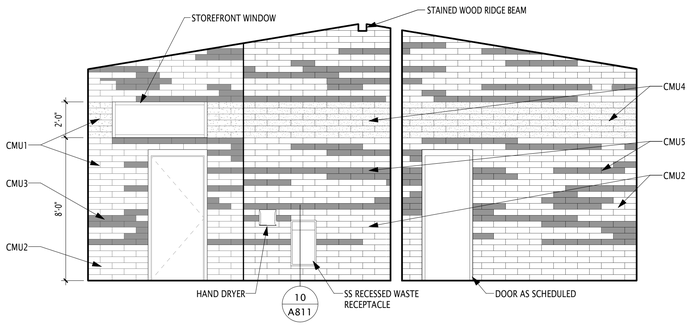


7 A402 WOMEN 102 - WEST ELEVATION
1/4" = 1'-0"

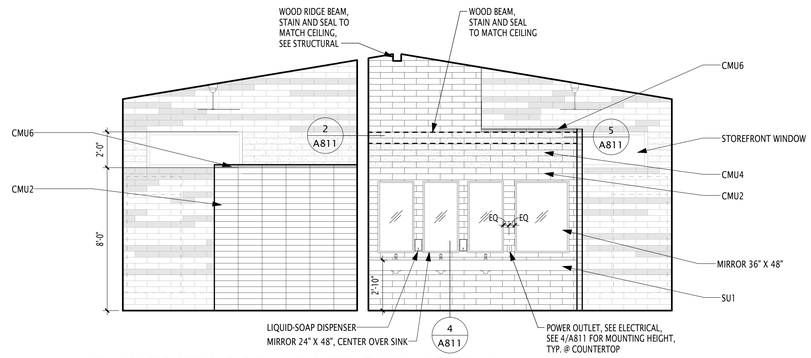


6 A402 WOMEN 102 - EAST ELEVATION
1/4" = 1'-0"

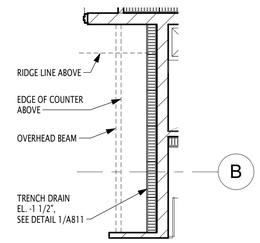


8 A402 LAV TRENCH DRAIN
1/4" = 1'-0"

| CONCRETE MASONRY UNIT (CMU) LEGEND | | |
|---|---|---|
| LABEL | COLOR | FINISH |
| CMU1 | WHITE LIMESTONE | SPLIT-FACE / STANDARD |
| CMU2 | WHITE LIMESTONE | STANDARD |
| CMU3 | ISLAND SAND | SPLIT-FACE / STANDARD |
| CMU4 | WHITE LIMESTONE | SPLIT-FACE |
| CMU5 | ISLAND SAND | STANDARD |
| CMU6 | CHARCOAL | STANDARD |

STANDARD CMU BLOCK OR NON-TEXTURED FACE OF SPLIT-FACE CMU BLOCK

TEXTURED FACE OF SPLIT-FACE CMU BLOCK

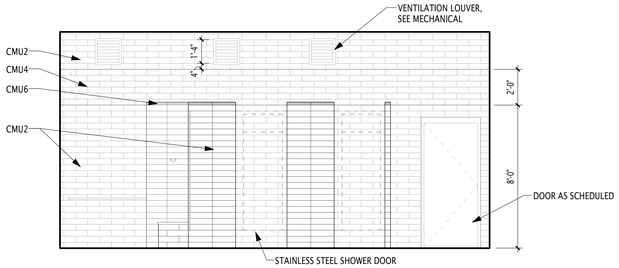


5 A402 WOMEN 102 - SOUTH ELEVATION 2
1/4" = 1'-0"

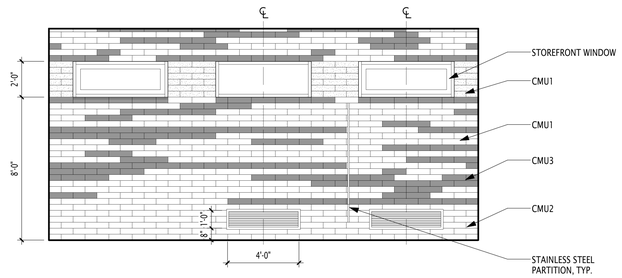


4 A402 WOMEN 102 - NORTH ELEVATION 2
1/4" = 1'-0"

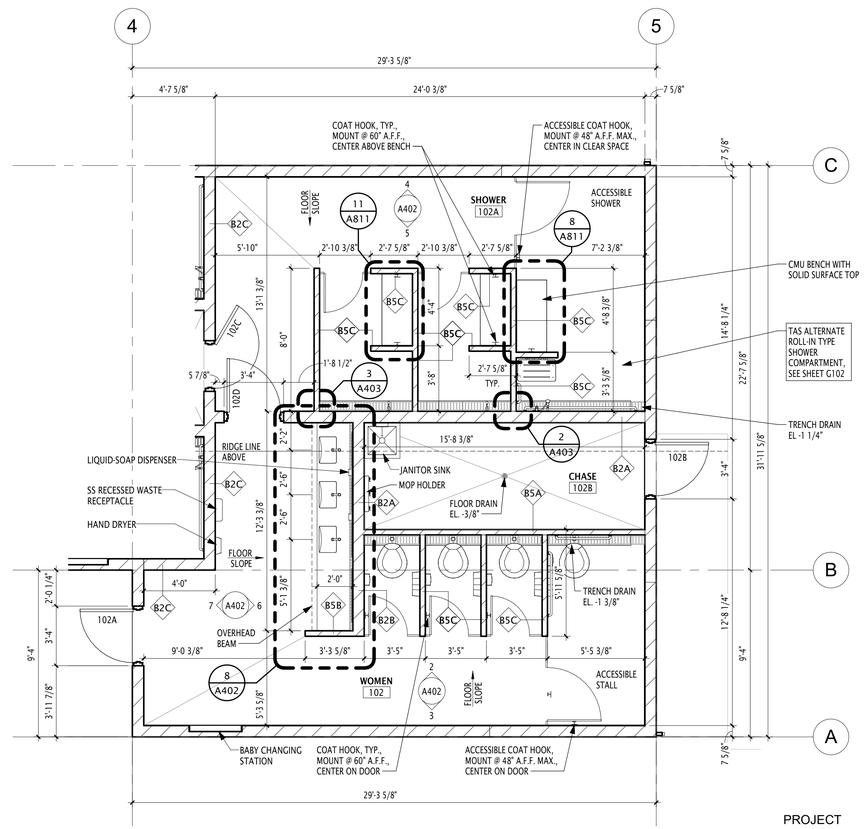


1 A402 ENLARGED FLOOR PLAN - WOMEN 102
1/4" = 1'-0"

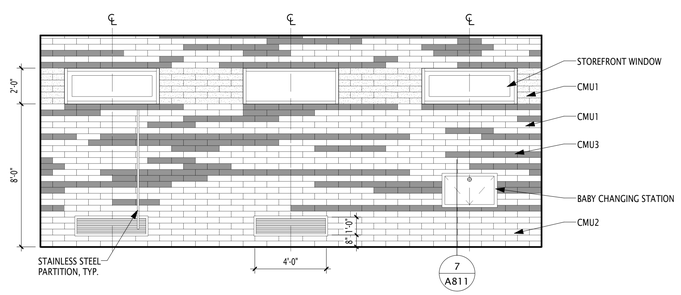


3 A402 WOMEN 102 - SOUTH ELEVATION 1
1/4" = 1'-0"

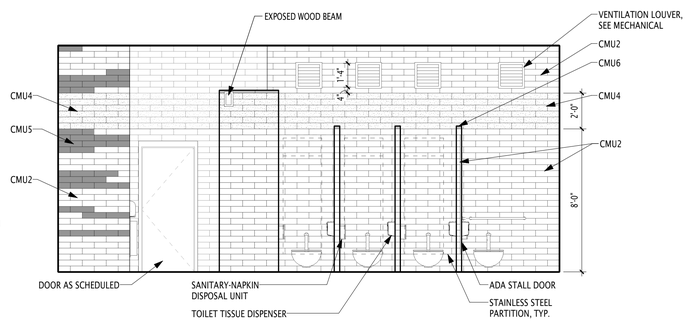


2 A402 WOMEN 102 - NORTH ELEVATION 1
1/4" = 1'-0"

PROJECT NORTH

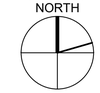

REGISTERED ARCHITECT
NICHOLAS A. PALUTH
24770
STATE OF TEXAS

01/22/2021
SIGNATURE DATE

OWNERSHIP OF INSTRUMENTS OF SERVICE AND COPYRIGHT
ALL REPORTS, PLANS, SPECIFICATIONS, COMPUTER FILES, FIELD DATA, NOTES, AND OTHER DOCUMENTS AND INSTRUMENTS PREPARED BY GSBS/BATENHORST INC. AS INSTRUMENTS OF SERVICE SHALL REMAIN THE PROPERTY OF GSBS. GSBS SHALL RETAIN ALL COMMON LAW, STATUTORY AND OTHER RESERVED RIGHTS, INCLUDING THE COPYRIGHT THERETO. ANY PUBLIC COMMUNICATION OR DISTRIBUTION OF THIS DRAWING IS PROHIBITED WITHOUT THE WRITTEN AUTHORIZATION OF GSBS.

TEXAS PARKS & WILDLIFE

GSBS ARCHITECTS
7291 GLENVIEW DRIVE
FORT WORTH, TX 76180
P 817 589.1722
GSBSARCHITECTS.COM
REGISTRATION NO. BR2895

# EISENHOWER STATE PARK

RESTROOM REPLACEMENT
PROJECT NUMBER: 1210136

DATE: 21-01-22
DESIGNED BY: NP
DRAWN BY: CJ
REVIEWED BY: SG
REVISED:
REVISED:
REVISED:

SHEET TITLE
WOMENS RESTROOM

SHEET NUMBER
A402

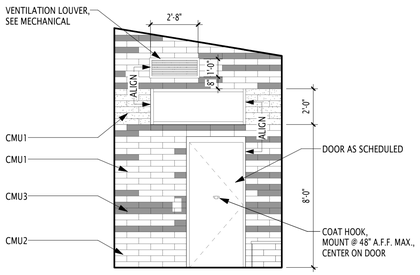


11 A403 FAMILY 104 - WEST ELEVATION
1/4" = 1'-0"

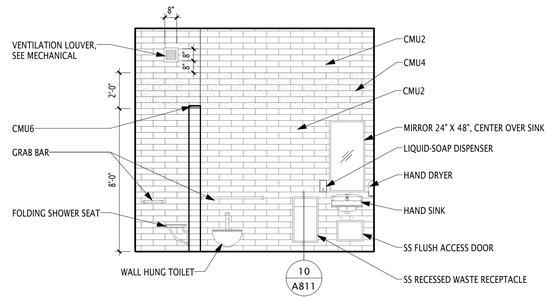


10 A403 FAMILY 104 - SOUTH ELEVATION
1/4" = 1'-0"

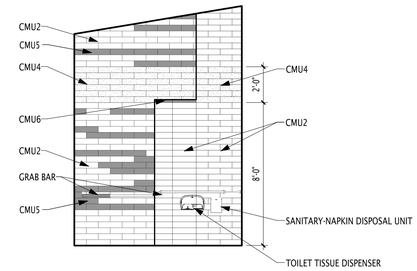


9 A403 FAMILY 104 - EAST ELEVATION
1/4" = 1'-0"

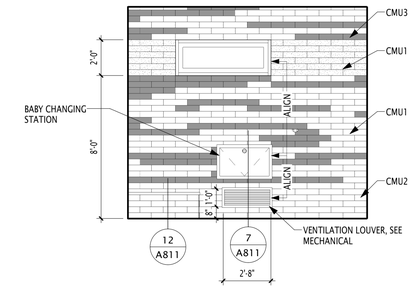


8 A403 FAMILY 104 - NORTH ELEVATION
1/4" = 1'-0"

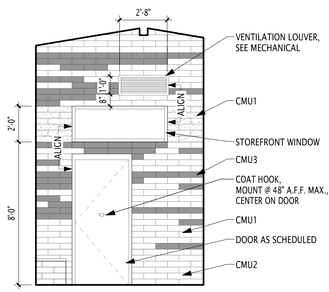


7 A403 FAMILY 103 - WEST ELEVATION
1/4" = 1'-0"

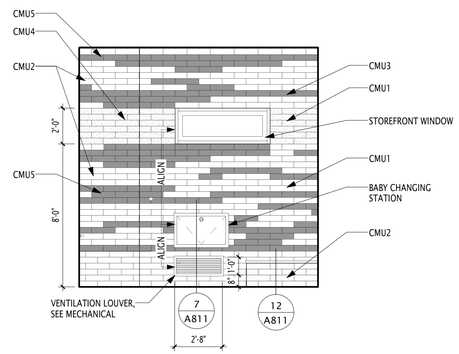


6 A403 FAMILY 103 - SOUTH ELEVATION
1/4" = 1'-0"

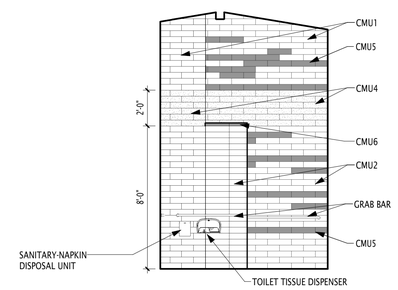


5 A403 FAMILY 103 - EAST ELEVATION
1/4" = 1'-0"

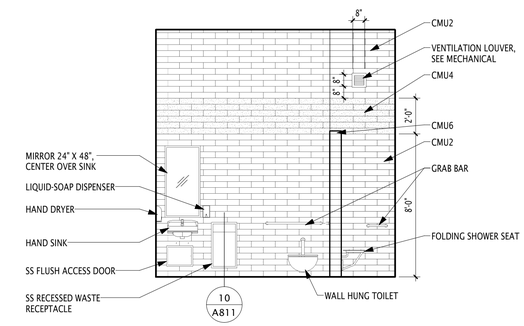


4 A403 FAMILY 103 - NORTH ELEVATION
1/4" = 1'-0"

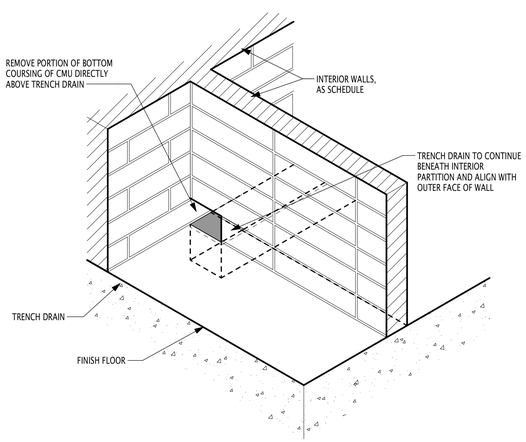


3 A403 TRENCH DRAIN DETAIL
1" = 1'-0"

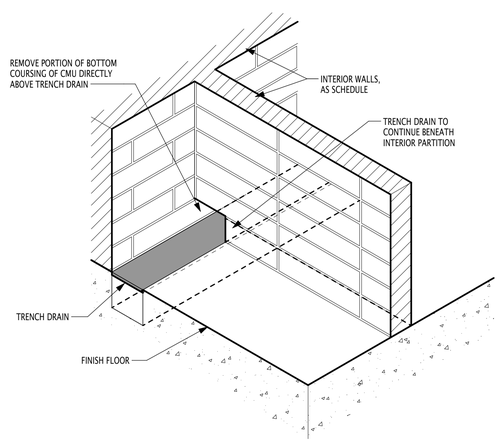


2 A403 TRENCH DRAIN DETAIL, TYP.
1" = 1'-0"

**CONCRETE MASONRY UNIT (CMU) LEGEND**

| LABEL | COLOR | FINISH |
|---|---|---|
| CMU1 | WHITE LIMESTONE | SPLIT-FACE / STANDARD |
| CMU2 | WHITE LIMESTONE | STANDARD |
| CMU3 | ISLAND SAND | SPLIT-FACE / STANDARD |
| CMU4 | WHITE LIMESTONE | SPLIT-FACE |
| CMU5 | ISLAND SAND | STANDARD |
| CMU6 | CHARCOAL | STANDARD |

STANDARD CMU BLOCK OR NON-TEXTURED FACE OF SPLIT-FACE CMU BLOCK

TEXTURED FACE OF SPLIT-FACE CMU BLOCK

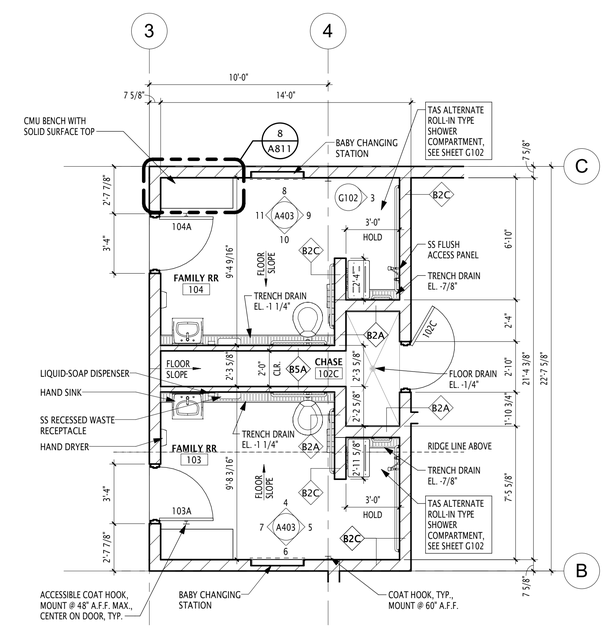


1 A403 ENLARGED FLOOR PLAN - FAMILY 103 & 104
1/4" = 1'-0"

PROJECT NORTH

01/22/2021
SIGNATURE DATE

OWNERSHIP OF INSTRUMENTS OF SERVICE AND COPYRIGHT
ALL REPORTS, PLANS, SPECIFICATIONS, COMPUTER FILES, FIELD DATA, NOTES, AND OTHER DOCUMENTS AND INSTRUMENTS PREPARED BY GSBS/BATWHORST INC. AS INSTRUMENTS OF SERVICE SHALL REMAIN THE PROPERTY OF GSBS. GSBS SHALL RETAIN ALL COMMON LAW, STATUTORY AND OTHER RESERVED RIGHTS, INCLUDING THE COPYRIGHT THERETO. ANY PUBLIC COMMUNICATION OR DISTRIBUTION OF THIS DRAWING IS PROHIBITED WITHOUT THE WRITTEN AUTHORIZATION OF GSBS.

TEXAS PARKS & WILDLIFE

GSBS ARCHITECTS
7291 GLEVIEW DRIVE
FORT WORTH, TX 76180
P 817 589 1722
GSBSARCHITECTS.COM
REGISTRATION NO. BR2895

# EISENHOWER STATE PARK

**RESTROOM REPLACEMENT**

PROJECT NUMBER: 1210136

DATE: 21-01-22
DESIGNED BY: NP
DRAWN BY: CJ
REVIEWED BY: SG
REVISED:
REVISED:
REVISED:

**SHEET TITLE**
FAMILY RESTROOMS

SHEET NUMBER
**A403**

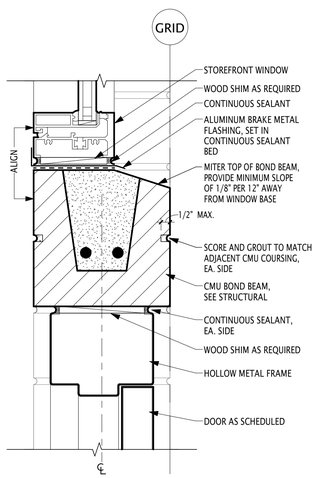


7 A601 TRANSOM DETAIL
3" = 1'-0"

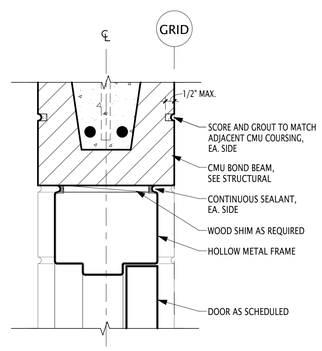


6 A601 HM DOOR HEAD
3" = 1'-0"

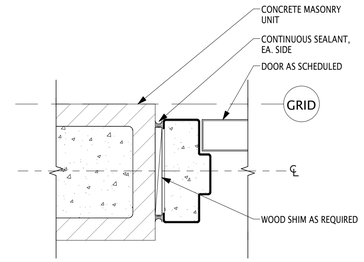


5 A601 HM DOOR JAMB
3" = 1'-0"

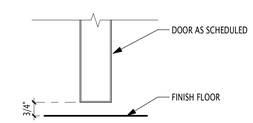


4 A601 INT. HM DOOR THRESHOLD
3" = 1'-0"

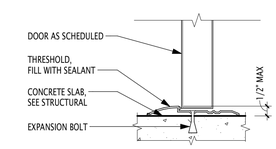


3 A601 EXT. HM DOOR THRESHOLD
3" = 1'-0"

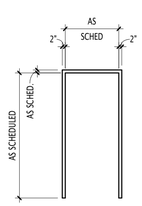


TYPE F1

2 A601 FRAME TYPES
1/4" = 1'-0"

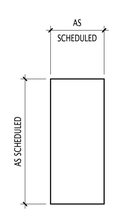


TYPE D1

1 A601 DOOR TYPES
1/4" = 1'-0"

**DOOR NUMBER** - REFERS TO REFERENCE DOOR MARK ON FLOOR PLANS
**PANEL** - INDICATES THE TYPE OF DOOR PANEL(S)
SNGL-SINGLE PANEL
**WIDTH** - INDICATES THE FINISHED DOOR PANEL WIDTH
**HEIGHT** - INDICATES THE FINISHED DOOR PANEL HEIGHT
**TYPE** - INDICATES DOOR PANEL TYPE, SEE DOOR PANEL ELEVATIONS
**MATERIAL/ FINISH** - INDICATES DOOR PANEL MATERIAL & FINISH
HM - HOLLOW METAL PNT - PAINT
**HARDWARE** - INDICATES DOOR HARDWARE SET, REFER TO SPECIFICATIONS
**HEAD HEIGHT** - INDICATES HEIGHT OF FRAME HEAD
**TYPE** - INDICATES DOOR PANEL TYPE, SEE DOOR FRAME ELEVATIONS
**MATERIAL/FINISH** - INDICATES FRAME MATERIAL & FINISH
HM - HOLLOW METAL PNT - PAINT
**REMARKS** - ANY SPECIAL CONDITIONS REQUIRED

## DOOR SCHEDULE

| | DOOR | | | | | | FRAME | | | DETAILS | | | | |
|---|---|---|---|---|---|---|---|---|---|---|---|---|---|---|
| DOOR NUMBER | PANEL | WIDTH | HEIGHT | TYPE | MATERIAL/ FINISH | HARDWARE | HEAD HEIGHT | TYPE | MATERIAL/ FINISH | DOOR HEAD | DOOR JAMB | DOOR THRESHOLD | REMARKS | DOOR NUMBER |
| 101A | SNGL | 3' - 0" | 7' - 0" | D1 | HM / PNT - P1 | 805DL | 4" | F1 | HM / PNT - P1 | 7/A601 | 5/A601 | 3/A601 | A | 101A |
| 101B | SNGL | 3' - 0" | 7' - 0" | D1 | HM / PNT - P1 | 205 | 4" | F1 | HM / PNT - P1 | 6/A601 | 5/A601 | 3/A601 | A | 101B |
| 101C | SNGL | 3' - 0" | 7' - 0" | D1 | HM / PNT - P1 | 801 | 4" | F1 | HM / PNT - P1 | 6/A601 | 5/A601 | 4/A601 | A | 101C |
| 102A | SNGL | 3' - 0" | 7' - 0" | D1 | HM / PNT - P1 | 805DL | 4" | F1 | HM / PNT - P1 | 7/A601 | 5/A601 | 3/A601 | A | 102A |
| 102B | SNGL | 3' - 0" | 7' - 0" | D1 | HM / PNT - P1 | 205 | 4" | F1 | HM / PNT - P1 | 6/A601 | 5/A601 | 3/A601 | A | 102B |
| 102C | SNGL | 2' - 6" | 7' - 0" | D1 | HM / PNT - P1 | 201 | 4" | F1 | HM / PNT - P1 | 6/A601 | 5/A601 | 4/A601 | A,B | 102C |
| 102D | SNGL | 3' - 0" | 7' - 0" | D1 | HM / PNT - P1 | 801C | 4" | F1 | HM / PNT - P1 | 6/A601 | 5/A601 | 4/A601 | A | 102D |
| 103A | SNGL | 3' - 0" | 7' - 0" | D1 | HM / PNT - P1 | 305DL | 4" | F1 | HM / PNT - P1 | 7/A601 | 5/A601 | 3/A601 | A | 103A |
| 104A | SNGL | 3' - 0" | 7' - 0" | D1 | HM / PNT - P1 | 305DL | 4" | F1 | HM / PNT - P1 | 7/A601 | 5/A601 | 3/A601 | A | 104A |

REMARKS:

A. SEE FINISH SCHEDULE ON SHEET A121 FOR PAINT COLOR.
B. DOOR CLOSER SHALL BE MOUNTED TO ALLOW FOR 180-DEGREE DOOR SWING.

REGISTERED ARCHITECT
NICHOLAS A. PALLUTH
24770
STATE OF TEXAS

01/22/2021
SIGNATURE DATE

OWNERSHIP OF INSTRUMENTS OF SERVICE AND COPYRIGHT
ALL REPORTS, PLANS, SPECIFICATIONS, COMPUTER FILES, FIELD DATA, NOTES, AND OTHER DOCUMENTS AND INSTRUMENTS PREPARED BY GSBS/BATENHORST INC. AS INSTRUMENTS OF SERVICE SHALL REMAIN THE PROPERTY OF GSBS. GSBS SHALL RETAIN ALL COMMON LAW, STATUTORY AND OTHER RESERVED RIGHTS, INCLUDING THE COPYRIGHT THERETO. ANY PUBLIC COMMUNICATION OR DISTRIBUTION OF THIS DRAWING IS PROHIBITED WITHOUT THE WRITTEN AUTHORIZATION OF GSBS.

TEXAS PARKS & WILDLIFE

GSBS ARCHITECTS
7291 GLEVIEW DRIVE
FORT WORTH, TX 76180
P 817 589 1722
GSBSARCHITECTS.COM
REGISTRATION NO. BR2895

# EISENHOWER STATE PARK

**RESTROOM REPLACEMENT**
PROJECT NUMBER: 1210136

DATE: 21-01-22
DESIGNED BY: NP
DRAWN BY: CJ
REVIEWED BY: SG
REVISED:
REVISED:
REVISED:

**SHEET TITLE**
DOOR SCHEDULE, ELEVATIONS AND DETAILS

SHEET NUMBER
**A601**

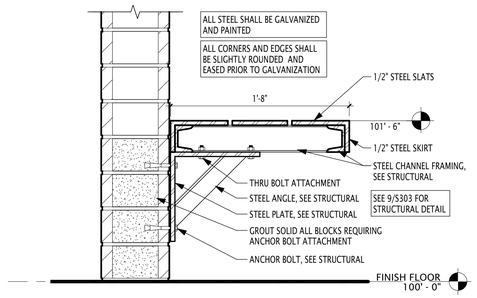


12 A811 BENCH DETAIL
1 1/2" = 1'-0"

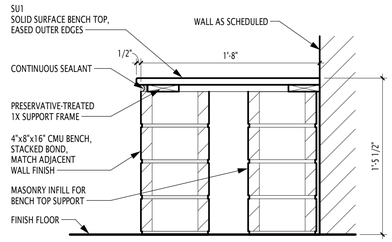


9 A811 TYP. BENCH SECTION
1 1/2" = 1'-0"

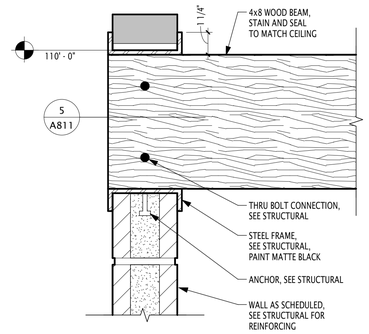


6 A811 BEAM SECTION DETAIL
3" = 1'-0"

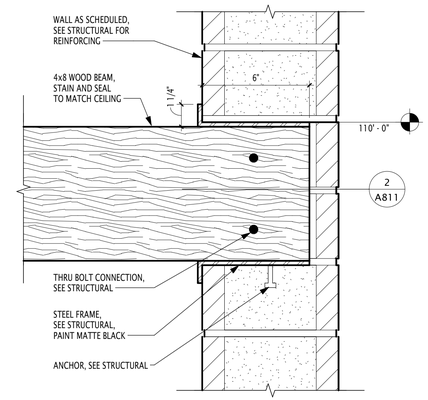


3 A811 BEAM SECTION DETAIL
3" = 1'-0"

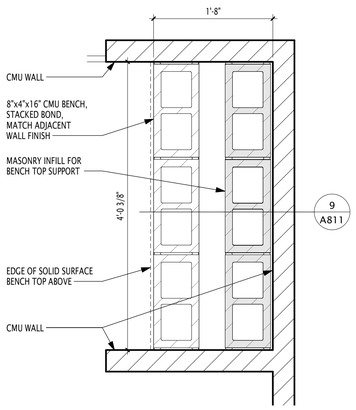


11 A811 TYP. BENCH DETAIL
1" = 1'-0"

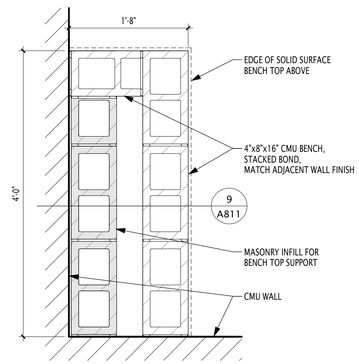


8 A811 TYP. ACCESSIBLE BENCH DETAIL
1" = 1'-0"

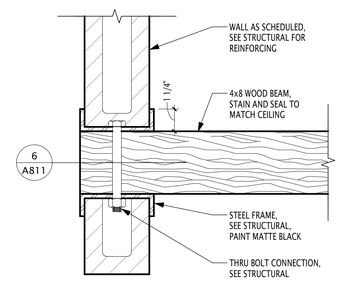


5 A811 BEAM PLAN DETAIL
3" = 1'-0"

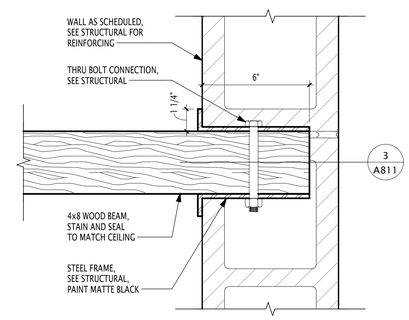


2 A811 BEAM PLAN DETAIL
3" = 1'-0"

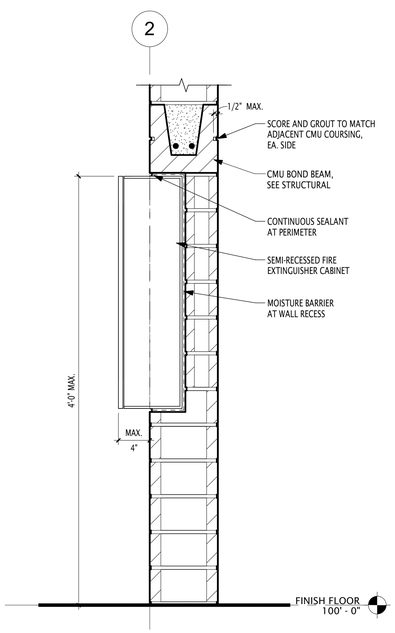


13 A811 FIRE CABINET DETAIL
1 1/2" = 1'-0"

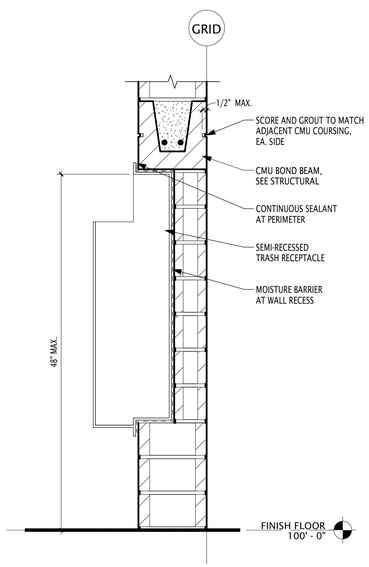


10 A811 TRASH RECEPTACLE DETAIL
1 1/2" = 1'-0"

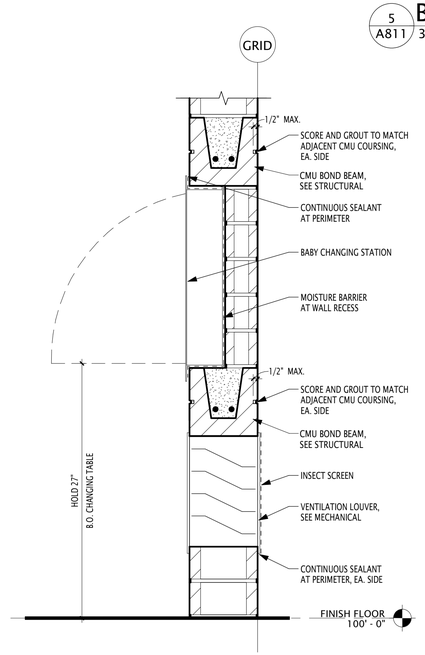


7 A811 BABY CHANGING TABLE DETAIL
1 1/2" = 1'-0"

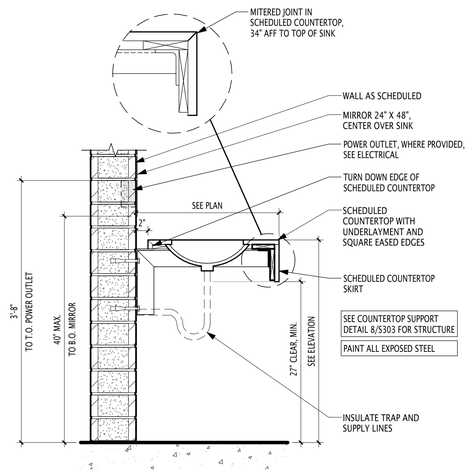


4 A811 COUNTERTOP
1" = 1'-0"

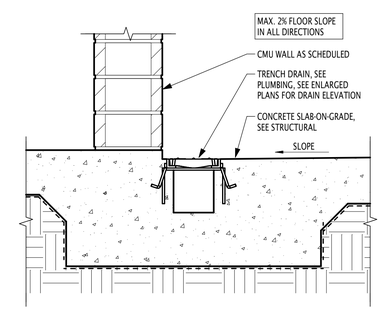


1 A811 TRENCH DRAIN DETAIL
1 1/2" = 1'-0"

REGISTERED ARCHITECT
NICHOLAS A. PALUTH
24770
STATE OF TEXAS

01/22/2021
SIGNATURE DATE

OWNERSHIP OF INSTRUMENTS OF SERVICE AND COPYRIGHT.
ALL REPORTS, PLANS, SPECIFICATIONS, COMPUTER FILES, FIELD DATA, NOTES, AND OTHER DOCUMENTS AND INSTRUMENTS PREPARED BY GSBS/BATWHORST INC. AS INSTRUMENTS OF SERVICE SHALL REMAIN THE PROPERTY OF GSBS. GSBS SHALL RETAIN ALL COMMON LAW, STATUTORY AND OTHER RESERVED RIGHTS, INCLUDING THE COPYRIGHT THERETO. ANY PUBLIC COMMUNICATION OR DISTRIBUTION OF THIS DRAWING IS PROHIBITED WITHOUT THE WRITTEN AUTHORIZATION OF GSBS.

TEXAS PARKS & WILDLIFE

GSBS ARCHITECTS
7291 GLEVIEW DRIVE
FORT WORTH, TX 76180
817 589 1722
GSBSARCHITECTS.COM
REGISTRATION NO. BR2895

# EISENHOWER STATE PARK
RESTROOM REPLACEMENT
PROJECT NUMBER: 1210136

DATE: 21-01-22
DESIGNED BY: NP
DRAWN BY: CJ
REVIEWED BY: SG
REVISED:
REVISED:
REVISED:

SHEET TITLE
INTERIOR DETAILS

SHEET NUMBER
A811

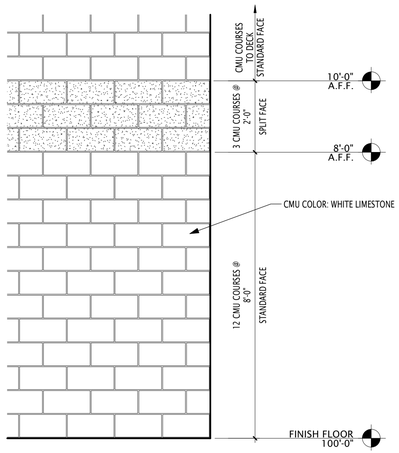


12 A911 ALT. 02 - TYP. INTERIOR WALL ELEVATION
1/2" = 1'-0"

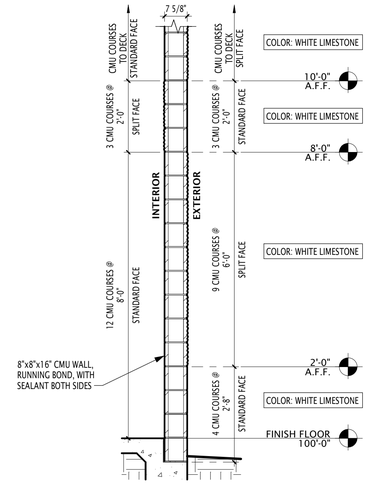


11 A911 ALT. 02 - TYP. EXTERIOR WALL COURSING
1/2" = 1'-0"

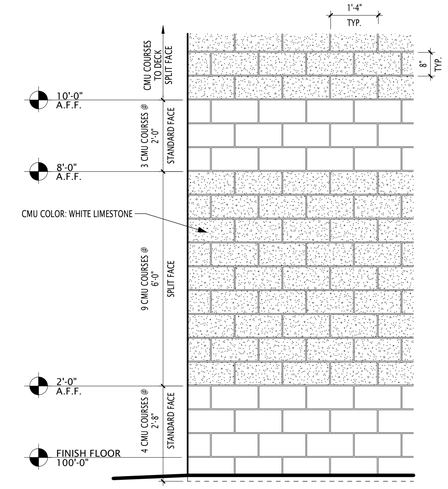


10 A911 ALT. 02 - TYP. EXTERIOR WALL ELEVATION
1/2" = 1'-0"

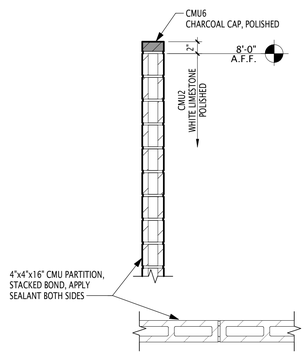


9 A911 ALT. 01 - WALL TYPE B5C
1" = 1'-0"

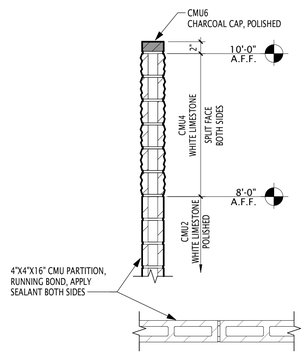


8 A911 ALT. 01 - WALL TYPE B5B
1" = 1'-0"

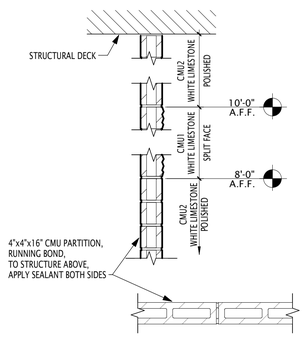


7 A911 ALT. 01 - WALL TYPE B5A
1" = 1'-0"

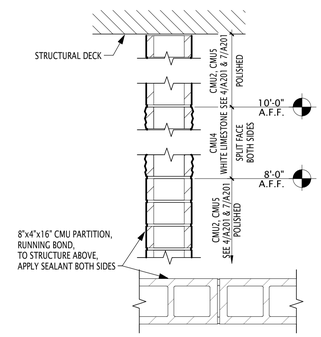


6 A911 ALT. 01 - WALL TYPE B2C
1" = 1'-0"

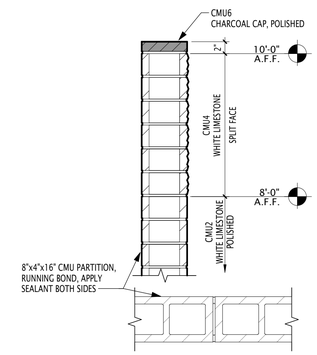


5 A911 ALT. 01 - WALL TYPE B2B
1" = 1'-0"

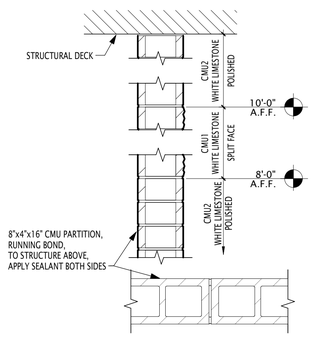


4 A911 ALT. 01 - WALL TYPE B2A
1" = 1'-0"

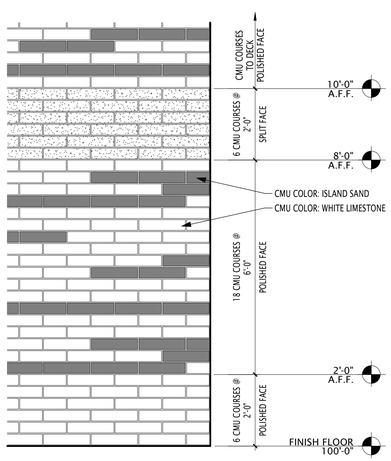


3 A911 ALT. 01 - TYP. INTERIOR WALL ELEVATION
1/2" = 1'-0"

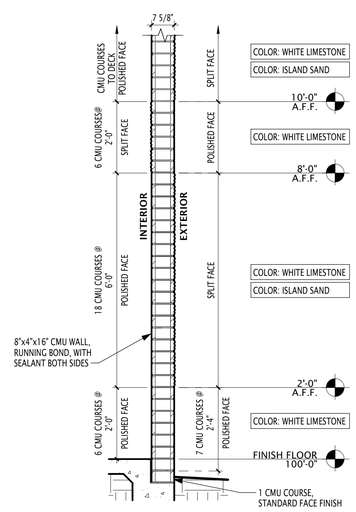


2 A911 ALT. 01 - TYP. EXTERIOR WALL COURSING
1/2" = 1'-0"

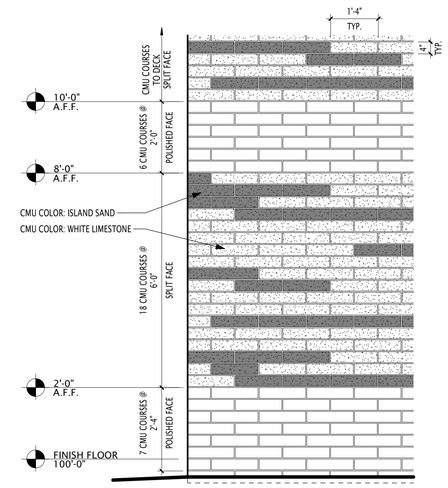


1 A911 ALT. 01 - TYP. EXTERIOR WALL ELEVATION
1/2" = 1'-0"

REGISTERED ARCHITECT
NICHOLAS A. PALLUTH
24770
STATE OF TEXAS

01/22/2021
SIGNATURE DATE

OWNERSHIP OF INSTRUMENTS OF SERVICE AND COPYRIGHT
ALL REPORTS, PLANS, SPECIFICATIONS, COMPUTER FILES, FIELD DATA, NOTES, AND OTHER DOCUMENTS AND INSTRUMENTS PREPARED BY GSBS/BATWHORST INC. AS INSTRUMENTS OF SERVICE SHALL REMAIN THE PROPERTY OF GSBS. GSBS SHALL RETAIN ALL COMMON LAW, STATUTORY AND OTHER RESERVED RIGHTS, INCLUDING THE COPYRIGHT THERETO. ANY PUBLIC COMMUNICATION OR DISTRIBUTION OF THIS DRAWING IS PROHIBITED WITHOUT THE WRITTEN AUTHORIZATION OF GSBS.

TEXAS PARKS & WILDLIFE

GSBS ARCHITECTS
7291 GLEVIEW DRIVE
FORT WORTH, TX
P: 817.589.1722
GSBSARCHITECTS.COM
REGISTRATION NO. BR2895

# EISENHOWER STATE PARK

**RESTROOM REPLACEMENT**

PROJECT NUMBER: 1210136

DATE: 21-01-22
DESIGNED BY: NP
DRAWN BY: CJ
REVIEWED BY: SG
REVISED:
REVISED:
REVISED:

**SHEET TITLE**
ALTERNATES

SHEET NUMBER
**A911**

# S T R U C T U R A L  N O T E S

## COORDINATION

A. The contractor shall compare the architectural, structural, mechanical, electrical, plumbing, and other series drawings and report any discrepancies between each set of drawings and within each set of drawings prior to fabrication and installation of any structural members.

B. Only larger sleeve openings and framed openings in structural framing component members are indicated on the structural drawings. However, all sleeves, inserts and openings, including frames and/or sleeves shall be provided for passage, provision and/or incorporation of the work of the contract, including but not limited to mechanical, electrical and plumbing work. This work shall include the coordination of sizes, alignment, dimensions, position, locations, elevations and grades as required to serve the intended purpose. Openings not indicated on the structural drawings, but required as noted above, shall be submitted to the engineer for review.

C. Refer to architectural, mechanical, electrical and plumbing drawings for floor elevations, slopes, drains and location of depressed and elevated floor areas.

D. Compatibility of the structure and provisions for building equipment supported on or from structural components shall be verified as to size, dimensions, clearances, accessibility, weights and reaction with the equipment for which the structure has been designed prior to submission of shop drawings and data for each piece of equipment and for structural components. Differences shall be noted on the submittals.

E. Shop drawings shall be prepared for all structural items and submitted for review by the engineer. Structural drawings shall not be reproduced and used as shop drawings. All items deviating from the structural drawings or from previously submitted shop drawings shall be clouded.

F. The details designated as "typical details" apply generally to the structural drawings in all areas where conditions are similar to those described in the details.

G. All structural elements of the project have been designed by the engineer to resist the required code vertical and lateral forces that could occur in the final completed structure only. It is the responsibility of the contractor to provide all required bracing during construction to maintain the stability and safety of all structural elements during the construction process until the lateral-load resisting or stability-providing system is completely installed and the structure is completely tied together. Temporary supports shall not result in the overstress or damage of the elements to be braced nor any elements used as brace supports.

H. The contract structural drawings and specifications represent the finished structure, and except where specifically shown, do not indicate the means or methods of construction. The contractor and their sub-contractors shall supervise and direct the work and shall be solely responsible for all construction means, methods, procedures, techniques, sequences and safety measures including, but not limited to, adherences to all osha guidelines. The engineer shall not have control of, and shall not be responsible for, construction means, methods, techniques, sequences or procedures, for safety precautions and programs in connection with the work, for the acts or omissions of the contractor, subcontractors, or any other person performing any of the work, or for the failure of any of these persons to carry out the work in accordance with the structural contract documents.

I. Where conflict exists among the various parts of the structural contract documents, structural drawings, general notes, and specifications, the strictest requirements, as indicated by the engineer, shall govern.

J. Periodic site observation by field representatives of JQ is solely for the purpose of determining if the work is proceeding in accordance with the structural contract documents. This limited site observation is not intended to be a check of the quality or quantity of the work, but rather a periodic check in an effort to inform the owner against defects and deficiencies in the work of the contractor.

## CODES & REFERENCED REPORTS

A. The General Building Code used as the basis for the structural design is as follows:
   1. International Building Code, 2015 Edition

B. Structural Concrete: Building Code Requirements for Reinforced Concrete, American Concrete Institute, ACI 318, as referenced by the General Building Code.

C. Concrete Masonry: Building Code Requirements for Concrete Masonry Structures, American Concrete Institute, ACI 530, as referenced by the General Building Code.

D. Structural Steel: Manual of Steel Construction, American Institute of Steel Construction Inc., ANSI/AISC 360, as referenced by the General Building Code.

E. Wood Framing: National Design Specifications for Wood Construction with Supplement, National Forest and Paper Products Association, as referenced by the General Building Code.

F. Structural Plywood: Plywood Design Specification, American Plywood Association, as referenced by the General Building Code.

G. Geotechnical Report: Foundation elements have been designed in accordance with information provided in the following geotechnical report:

| | |
|---|---|
| Geotechnical engineer: | Alpha Testing, Inc. |
| Report Number: | G201372 |
| Date: | 08.14.2020 |

## DESIGN LOADS

A. Dead Loads include the self-weight of the structural elements and the following superimposed loads:

| | | |
|---|---|---|
| 1. | Ceiling and Mechanical at roof | 10 psf |
| 2. | Roofing and rigid insulation | 8 psf |

B. Live Loads

| | OCCUPANCY OR USE | UNIFORM (psf) | CONCENTRATED (lbs.) |
|---|---|---|---|
| 1. | Ground Floor | 100 | N/A |
| 2. | Roof - Unreduced (see Note 1) | 20 | N/A |

Notes:
1. The roof structure has additionally been designed to support the weight of ponded water in accordance with AISC.
   a. Notify Architect if the final roof slope is less than 1/4"per foot. Elevation difference between primary and overflow drains or scuppers shall not exceed 2".

C. Snow loads
   1. Ground snow load, Pg — 5 psf

D. Wind loads
   1. Wind lateral load on structural frame is based on ASCE 7-10 using the following:
      a. Basic Wind Speed (Ultimate) — 115 mph
      b. Exposure — C
      c. Internal Pressure Coefficient, Gcpi — +/-0.18
      d. Risk Category — II
   2. Components and cladding wind pressures:

| Surface | (PSF) | Zone | Area At (ft2) |
|---|---|---|---|
| Exterior walls | +26.7 | Interior and edge | 10 or less |
| | -29.0 | Interior | 10 or less |
| | -35.7 | Edge | 10 or less |
| | +20.1 | Interior and edge | 500 or greater |
| | -22.3 | Interior | 500 or greater |
| | -22.3 | Edge | 500 or greater |
| Roof | -26.8 | Interior | 10 or less |
| | -46.6 | Edges | 10 or less |
| | -46.6 | Corners | 10 or less |
| | -59.0 | Edge Overhang | 10 or less |
| | -96.1 | Corner Overhang | 10 or less |
| | -24.3 | Interior | 100 or greater |
| | -34.2 | Edges | 100 or greater |
| | -34.2 | Corners | 100 or greater |
| | -59.0 | Edge Overhang | 100 or greater |
| | -66.4 | Corner Overhang | 100 or greater |

- Pressures for Tributary Areas in between the listed values may be linearly interpolated.
- Negative value signifies pressure acting away from the surface (suction).
- Edge and Corner zone distances shall be determined in accordance with referenced standard.
- Pressures on parapets shall be determined by combining positive and negative wall pressures or wall and roof pressures listed above in accordance with the referenced standard.
- * Pressures are for gross uplift conditions. Refer to roof plan(s) for net uplift values for design of joists, joist girders, and bridging.

E. Seismic Loads
   1. The structure and structural components of the building have been designed in accordance with General Building Code with the following criteria:
      a. Seismic Importance Factor, IE — 1
      b. Risk Category — II
      c. Mapped Spectral Response Accelerations
         i. Ss (%g) — 15.4
         ii. S1 (%g) — 6.5
      d. Site Class — C
      e. Spectral Response Coefficients
         i. SDS — 0.123
         ii. SD1 — 0.07
      f. Seismic Design Category — B
      g. Basic Seismic-force-resisting system
         Steel System Not Specifically Detailed for Seismic Resistance
      h. Design Base shear, V — 0.01W
      i. Seismic Response Coefficient(s), Cs — 0.01
      j. Response Modification Factor(s), R — 3
      k. Analysis Procedure Used — ELF

## BUILDING PAD PREPARATION

A. Structural (Select) Fill material shall be a "non-expansive" material with a plasticity index between 4 and 15, and a liquid limit less than 35. Strucutral Fill shall be clean of organics, construction debris, deleterious material, and rocks larger than 4 inches. Structural fill shall be evaluated and tested by the Geotechnical Engineer prior to placement in the field.

B. Prior to placing fill material, remove all organic and other deleterious material from the existing subgrade for a distance of 5' 0" beyond building line and 10'-0" at entrances, to a depth of 12 feet below final subgrade elevation. All exposed surfaces shall then be scarified to a depth of 6 inches, watered as required and recompacted to a minimum of 95 percent of the maximum dry density as defined by ASTM D 698 (Standard Proctor Test) at a moisture content within 5 percent of the optimum moisture content.

C. Prior to placing select fill material, the building pad shall be filled using layer-compacted, moisture-conditioned on-site clay soils to within 2 feet of finished subgrade elevation. The moisture-conditioned soils shall be placed in 6 to 8 inch loose lifts at a minimum moisture content of 3 percentage points above optimum. Each lift shall be compacted between 93 and 97 percent of its maximum dry density as defined in ASTM D 698. Refer to geotechnical report for additional recommendations regarding moisture-conditioning stockpiled soils prior to placing on the building pad.

D. Structural fill shall be placed in 8 inch loose lifts to final subgrade elevation, watered as required and compacted to a minimum of 95 percent of the maximum dry density as defined in ASTM D 698 at a moisture content within -1 to +3 percent of the optimum moisture content.

E. Compaction and moisture content of subgrade and each lift of structural fill shall be inspected and approved by a qualified engineering technician, supervised by a Geotechnical Engineer.

F. Structural fill shall not be placed beyond the limits of the exterior building structure.

G. The above recommendations have been prepared in accordance with the referenced geotechnical report.

## CAST-IN-PLACE CONCRETE

A. CONCRETE MIX USAGE SCHEDULE:
   All concrete shall conform to the requirements as specified in the table below, unless noted otherwise on the Structural Drawings:

| Use | Strength psi | Agg. Type | Agg. Size | Slump Inches | Max w/c | Air Content |
|---|---|---|---|---|---|---|
| Grade Beams | 4500 | NWT | 1" | 3-5 | 0.45 | 6% |
| Interior Slab-on-Grade | 4000 | NWT | 1" | 3-5 | ---- | ----- |
| Slab-on-Grade (Exposed to Weather) | 4500 | NWT | 1" | 3-5 | 0.45 | 6% |
| Exterior Equipment Pads | 4500 | NWT | 1" | 3-5 | 0.45 | 6% |
| Topping Slabs and Housekeeping Pads | 3000 | NWT | 1" | 3-5 | ---- | ----- |

   1. "NWT" refers to normal concrete having air dry unit weight of approximately 145 PCF (ASCE C33 aggregate)
   2. Where the w/c ratio is not indicated in the table above, it shall be as necessary to meet strength requirements.
   3. Where the w/c ratio is shown, it shall be adhered to regardless of strength requirements.
   4. "Strength" is required compressive cylinder strength at an age of 28 days.

B. A maximum of 20% of the cementitious materials used in mix designs may be replaced with class C or F fly ash.

C. Fly ash shall not be used in architecturally exposed concrete.

D. Provide 6 percent plus or minus 1 1/2 percent of entrained air in concrete permanently exposed to the weather and elsewhere at the contractor's option.

E. Horizontal construction joints in concrete placements shall be permitted only where indicated on the Structural Drawings. All vertical construction joints shall be made in the center of spans in accordance with the typical details. Contractor shall submit proposed locations for construction joints not shown on the Structural Drawings for review by the Architect and Engineer. Additional construction joints may require additional reinforcing as specified by the Engineer which shall be provided by the contractor at no additional cost to the owner.

F. Embedded conduits, pipes, and sleeves shall meet the requirements of ACI 318, or Section 26.8, including the following:
   1. Conduits and pipes embedded within a slab, wall, or beam (other than those passing through) shall not be larger in outside dimension than 1/3 the overall thickness of the slab, wall or beam in which they are embedded.
   2. Conduits, pipes and sleeves shall not be spaced closer than three diameters or widths on center.

G. Concrete sampling for quality assurance: Concrete that is pumped shall be sampled at the point of discharge from the truck.

## CONCRETE REINFORCING

A. Concrete reinforcement for the project shall conform to the following:
   1. All reinforcing steel shall be new billet steel in accordance ASTM A615, Grade 60, unless noted otherwise in the Structural Drawings or these notes.
   2. Welded wire reinforcement. Welded smooth wire reinforcement, ASTM A1064, yield strength 65,000 psi where noted on the Structural Drawings. Welded deformed wire reinforcement, ASTM A1064, yield strength 70,000 psi where noted on the Structural Drawings. Welded wire reinforcement to be provided in flat sheets.

B. Detailing of reinforcing steel shall conform to the American Concrete Institute 315 Detailing Manual and all hooks and bends in reinforcing bars shall conform to ACI detailing standards, unless noted otherwise on the Structural Drawings.

C. Welded Wire Reinforcement shall be continuous across the entire concrete surface and not interrupted by beams or girders and properly lapped one cross wire spacing plus 2".

D. Reinforcement in Topping Slabs shall be welded smooth wire reinforcement minimum 6 x 6 W2.9 x W2.9 in all topping slabs unless specified otherwise on the Structural Drawings.

E. Reinforcement in Housekeeping Pads shall be welded smooth wire reinforcement 6 x 6 W2.9 x W2.9 minimum in all housekeeping pads supporting mechanical equipment whether shown on the Structural Drawings or not unless heavier reinforcement is called for on the Structural Drawings.

F. In unscheduled grade beams, walls, and slabs, detail reinforcing as follows:
   1. Class A lap beam top reinforcing bars at mid span.
   2. Class A lap beam bottom reinforcing bars at the supports.
   3. Provide Class B lap at other location pending Engineer's approval.
   4. Provide standard hooks in top bars at cantilever and discontinuous ends of beams, walls and slabs.
   5. Provide corner bars for all horizontal bars at the inside and outside faces of intersecting beams or walls. Corner bars are not required if horizontal bars are hooked.
   6. Provide 2-#4 diagonal bars at all slab re-entrant corners placed under the top mat of steel.

G. Welding of reinforcing steel will not be permitted unless specifically shown on the Structural Drawings.

H. Heat shall not be used in the fabrication or installation of reinforcement.

I. Reinforcing steel clear cover shall be as follows:
   1. Earth-formed grade beams — 1 1/2" top, 3" sides, 3" bottom
   2. Slab-on-grade — 2" top

## STRUCTURAL MASONRY

A. Minimum compressive strength of the masonry (f'm) shall be as noted below.

B. Mortar shall conform to ASTM C270, Type S. Masonry cement shall not be used.

C. Concrete masonry units shall be hollow load bearing units which conform to ASTM C90, with a minimum net compressive strength as follows:

| f'm (psi) | Net area Compressive Strength of CMU Block (psi) |
|---|---|
| 2000 | 2000 |

D. Coarse grout shall conform to ASTM C476, with a maximum aggregate size of 1/2" and a minimum compressive strength equal to the specified minimum compressive strength, f'm, but not less than 2000 psi. Course grout shall be placed in accordance with ACI 530.01 Section 3.5.

E. Reinforce concrete masonry unit joints with ladder type hot dip galvanized cold-drawn steel conforming to ANSI/ASTM A82, with [W1.7 or W2.8]side rods with W1.7 cross rods.
   1. Space joint reinforcing at 16 inches o.c. unless noted otherwise.
   2. Lap joint reinforcing 14 inches at splices.
   3. Provide prefabricated joint reinforcing corner pieces at all wall corners and intersections.
   4. Joint reinforcing shall be discontinuous at control and expansion joints.

F. Lap reinforcing bars in grouted masonry as noted below. Splices in reinforcing shall be staggered so that not more than 1/2 of all bars are spliced at the same location.
   1. Vertical bars:
      #4, #5 rebar — 60 bar diameters
      #6 rebar — 70 bar diameters
      #7 or larger rebar — Mechanical splices only
   2. Bond beams: — 40 bar diameters
   3. Lintels: — Do not splice

G. Embedded conduits, pipes, and sleeves shall meet the requirements of ACI 530, Section 3.2.2, including the following:
   1. Conduits, pipes, and sleeves in masonry shall be no closer than 3 diameters on center. Minimum spacing of conduits, pipes or sleeves of different diameters shall be determined using the larger diameter.
   2. Vertical conduits, pipes, or sleeves placed in masonry jambs, columns or pilasters shall not displace more than 2 percent of the net cross-sectional area.
      a. The net cross-sectional area is the area of masonry units, grout, and mortar. Ungrouted cells are not considered part of the net cross-sectional area.

TEXAS PARKS & WILDLIFE

EISENHOWER STATE PARK
RESTROOM REPLACEMENT
PROJECT NUMBER: 1210136

DATE: 01/22/2021
DESIGNED BY: DW
DRAWN BY: CM
REVIEWED BY: DW
REVISED:
REVISED:
REVISED:

SHEET TITLE
STRUCTURAL NOTES

01/22/2021

shaping the built environment

JQ INFRASTRUCTURE, LLC
3017 WEST 7TH STREET, SUITE 400
817.546.7200
FORT WORTH, TEXAS 76107
JQIENG.COM
TBPE FIRM F-7986
PROJECT NO: 4200137

STATE OF TEXAS
DAVID A. WALKER
132006
LICENSED
PROFESSIONAL ENGINEER

SHEET NUMBER
S101

# S T R U C T U R A L  N O T E S

## POST-INSTALLED ANCHORS AND DOWELS

A. Screw Anchors:
1. In Concrete: Screw Anchors shall have been tested and qualified in accordance with ACI 355.2 and ICC-ES AC 193. Qualifying anchors shall be one of the following;
   a. Kwik HUS-EZ (ICC-ES ESR-3027), Hilti Inc.
   b. Titen HD (ICC-ES ESR-2713), Simpson Strong-Tie Co., Inc.
2. In Grouted Masonry: (Installation permitted in both the top and face of wall) Screw Anchors shall have been tested and qualified in accordance with ICC-ES AC 106. Qualifying anchors shall be one of the following products:
   a. Kwik HUS-EZ and HUS-EZ P (ICC-ESR-3056), Hilti Inc.
   b. Titen HD (ICC-ES ESR-1056), Simpson Strong-Tie Co., Inc.

B. Adhesive Anchors with Threaded Rod:
1. In Concrete: Adhesive Anchors shall have been tested and qualified in accordance with ACI 355.4 and ICC-ES AC 308. Qualifying anchors shall be one of the following products, unless specifically noted otherwise on structural drawings:
   a. Epoxy: HIT-RE 500V3 SAFE SET (ICC-ES ESR-3814), Hilti Inc.
   b. Epoxy: SET-3G (ICC-ES ESR-4057), Simpson Strong-Tie Co., Inc.
   c. Acrylic: HIT-HY 200 SAFE SET (ICC-ES ESR-3187), Hilti Inc.
   d. Acrylic: AT-XP (IAPMO-ER-0263), Simpson Strong-Tie Co., Inc.
2. In Grouted Concrete Masonry: (Installation permitted in both the top and face of wall) Adhesive Anchors shall have been tested and qualified in accordance with ICC-ES AC 58. Qualifying anchors shall be one of the following:
   a. Acrylic: HIT HY-270 (ICC-ES ESR-4143), Hilti, Inc.
   b. Epoxy: SET-XP (IAPMO-ES ER-265), Simpson Strong-Tie Co., Inc.
   c. Acrylic: AT-XP (IAPMO-ES ER-0281), Simpson Strong-Tie Co., Inc.
3. In Ungrouted Concrete Masonry:
   a. Acrylic: HIT HY-270 (ICC-ES ESR-4143), Hilti, Inc.
   b. Epoxy: SET-XP (IAPMO-ES ER-265), Simpson Strong-Tie Co., Inc.
4. Threaded anchor rod shall be one of the following:
   a. Hilti adhesive: "HAS-V-36" (u.n.o), HAS-E-55", "HAS-B-105" ASTM F1554 Threaded Rods
   b. Simpson adhesive: Steel meeting the requirements of ASTM F1554, grade 36.
   c. Anchor rod shall have a chamfered end on one end to accept a nut and washer; it may have a 45-degree chisel point on the other end.
   d. Nuts and washers shall have a proof load strength at least as strong as anchor rod. Stainless steel nuts and washers shall be provided with stainless steel rods.

C. Adhesive Rebar Dowelling
1. Adhesive dowels are not permitted to be substituted for cast-in dowels unless authorized in advance by JQ for each specific location.
2. Adhesive doweling systems in concrete shall have been tested and qualified in accordance with ACI 355.4 and ICC-ES AC 308. Qualifying anchors shall be one of the following products, unless specifically noted otherwise on structural drawings:
   a. Epoxy: HIT-RE 500V3 SAFE SET (ICC-ES ESR-3814), Hilti Inc.
   b. Epoxy: SET-3G (ICC-ES ESR-4057), Simpson Strong-Tie Co., Inc.
   c. Acrylic: HIT-HY 200 SAFE SET (ICC-ES ESR-3187), Hilti, Inc.

D. Anchor and Dowel Installation
1. Anchors and dowels of the size and embedment shown on the Drawings shall be installed in accordance with the Contract Documents, the manufacturer's recommendations, and the manufacturer's current evaluation (ICC-ES or IAPMO-ES) report for the anchor. If conflicts exist between these referenced documents, the most stringent requirements shall govern.
2. The Contractor shall locate all existing reinforcing steel and other embedded items contained in the concrete using non-destructive methods and shall position anchor locations to avoid conflicts with existing embedded items. Anchor or dowel locations can be adjusted by a maximum of 1 1/2" from detailed locations to avoid conflicts, but shall neither change arrangement nor move closer to a concrete edge.
3. Based on field verified locations of reinforcing steel and embedded items, the Contractor shall create templates for each anchor group. Submit template dimensions for review prior to fabrication of connection plates.
4. Holes for anchors and dowels shall be drilled in a continuous operation using the drill-bit type and size recommended by the anchor manufacturer. Holes shall be drilled perpendicular to the concrete surface and shall not be enlarged or redirected at any point along its length. Holes shall be drilled using a hammer drill, coring shall not be allowed, unless noted otherwise.
5. Oil free compressed air shall be used to blow out the holes; shop vacs, squeeze bulbs, etc. shall NOT be used. Refer to manufacturer's information for detailed cleaning instructions.
   a. Hilti Safe-Set system may be used to eliminate hole cleaning with adhesive anchors.
   b. Simpson Speed Clean DXS system may be used to eliminate hole cleaning with adhesive anchors.
6. All abandoned holes shall be filled with non-metallic nonshrink grout capable of reaching a design compressive strength of 5,000 psi at 28 days.
7. Holes in connection plates shall be no more than 1/16" larger than the anchor diameter. If larger holes are required for erection purposes, Contractor shall notify Engineer such that a plate washer size can be provided.
8. Concrete shall have a compressive strength of 2500 psi minimum at an age of 21 days.
9. Adhesive anchors and dowels: Concrete and masonry substrates shall have the following minimum and maximum temperatures at the time of adhesive anchor and dowel installation:

| | Minimum (°F) | Maximum (°F) |
|---|---|---|
| Hilti HIT RE-500V3 SAFE SET | 23 | 104 |
| Simpson SET-3G | 40 | 100 |
| Hilti HY-270 | 41 (23 in CMU) | 104 |
| Hilti HY-200 SAFE SET | 14 | 104 |
| Simpson AT-XP | 14 | 100 |

E. The following parameters were used in the determination of the adhesive bond stress for adhesive anchors:
1. Concrete temperature range:
   a. Epoxy: HIT-RE 500V3 SAFE SET (ICC-ES ESR-3814): Temperature range "A" (Max short term temp = 130degF, max long term temp = 110degF)
   b. Epoxy: SET-3G (ICC-ES ESR-4057): Temperature Range 1 (Max. Short term temp. = 160degF, max. long term temp. = 110degF)
   c. Epoxy: SET (ICC-ES ESR-1772): Max. base material temp. = 110deg F
   d. Acrylic: HIT-HY200 SAFE SET (ICC-ES ESR-3187): Temperature range "A" (Max short term temp = 130deg F, max long term temp = 110deg F)
   e. Acrylic: AT-XP (IAPMO-ES ER-263): Temperature Range 1 (Max. Short term temp. = 180degF, max. long term temp. = 110degF)
2. Drilled hole condition: Dry

## STRUCTURAL STEEL

A. Material
1. All hot rolled steel members shall be new and conform to ASTM specification A6.
2. ASTM Specification and Grade - clearly mark the grade on each member.
3. Unless Noted otherwise on the Structural Drawings, structural steel members shall be:
   a. Angles shall conform to ASTM A36.
   b. Structural steel plate shall conform to ASTM A36.
   c. Any other steel shall conform to ASTM A36.

B. Fabrication
1. Splicing of structural steel members is prohibited without prior approval of the Engineer as to location and type of splice to be made. Any member having splice not shown and detailed on shop drawings will be rejected.

C. Erection
1. Erection tolerances of anchor bolts, embedded items, and all structural steel unless specified otherwise on the Structural Drawings shall conform to the AISC Code of Standard Practice.
2. Field cutting of structural steel or any field modifications to structural steel shall not be made without prior approval of the Engineer.
3. Contractor shall protect any unprimed structural steel from detrimental effects of corrosion, as required, until the steel is enclosed and protected by the new construction.
4. Hot dip galvanize after fabrication all structural steel items and connections permanently exposed to the weather, whether specified on the Structural Drawings or not. Such items include, but are not limited to:
   a. Shelf angles
   b. All embedded plates in concrete
   c Building cladding support steel in space not air conditioned and/or exposed to moisture outside the exterior waterproofing surface if any.
   d Railing exposed to weather.
   e Examine the Architectural and Structural Drawings for other items required to be hot dipped galvanized. Galvanize all nuts, bolts, and washers used in connection with such steel. Field welded connections shall have welds protected with "Z.R.C. Cold Galvanizing Compound" as manufactured by Z.R.C. Company.

D. Contractor shall coordinate structural steel fireproofing requirements. All interior structural steel, including steel joists, scheduled or indicated to receive spray applied fireproofing shall be delivered to the project site unprimed. Steel exposed to corrosive conditions after installation shall be primed with a protective coating which does not diminish the bond between the spray applied fireproofing, and the steel substrate. Any primer, and/or coating applied to structural steel shall be approved for use in the applicable U.L. Fire Resistance Assembly used on the project.

## STRUCTURAL STEEL CONNECTIONS

A. Welded Connections
1. All welding shall conform to ANSI/AWS D1.1, latest edition.
2. Fillet welds with no size specified shall be 3/16 inch or minimum size required by AISC, whichever is larger.

B. Structural steel connections not specifically detailed on the Structural Drawings shall be designed and detailed by the Contractor under the direct supervision of a professional engineer licensed in the state having jurisdiction at the project site. Sealed calculations for all connections designed by the Contractor shall be submitted for the Architect's files.

C. Beam connections shall be designed and detailed as follows, unless noted otherwise on the Structural Drawings:
1. Connections shall be AISC type 2 simple framing connections. Shear tab connections shall not be used unless specifically detailed on the Structural Drawings, or connections are designed and detailed by the fabricator's registered professional engineer licensed in the State of [XX] and sealed calculations are submitted.
2. In general, shop connections shall be bolted or welded and field connections shall be bolted.
3. Where indicated, connections shall be designed for the scheduled shear force. The shear force is indicated on the Structural Drawings as "R = ", and the horizontal force indicated as "H = ".
4. If not indicated on the Structural Drawings, connections shall be designed for 55 percent of the total load capacity for the beam span shown in the beam tables in the AISC Manual referenced in the "Codes & Referenced Reports" notes.
5. Short slotted holes shall be permitted provided washers are installed in accordance with AISC requirements. Washers shall be hardened where A325 bolts are utilized.

D. For connections not specifically addressed by these notes or the Structural Drawings, provide fillet welds at all contact surfaces sufficient to develop the tensile strength of the smaller member at the joint.

## TIMBER FRAMING

A. Unless noted otherwise on the Structural Drawings, all structural framing lumber shall be clearly marked No. 2 Southern yellow pine or Douglas fir, except that non-load bearing interior walls may be stud grade Southern yellow pine, Douglas fir, or Spruce-pine-fir.

B. Wood Preservative Treated Lumber (Pressure Treated):
1. Preservative Treated Lumber shall be Southern Yellow Pine and shall be treated as described below.
2. Preservative Treatment by Pressure Process should be performed according to the AWPA methods described below. The preservative chemicals shall be waterborne and can include Alkaline Copper Quat (ACQ-C, ACQ-D) and Copper Azole (CBA-C & CA-B) for interior or exterior uses and Inorganic Boron (SBX) for interior use only. Preservative shall not contain arsenic or chromium and shall not contain ammonia carriers.
3. Wood Installed for above ground use shall be preservative treated using water-borne preservatives in accordance with AWPA U2, use category UC3B. The locations to be treated are as follows:
   a. Wood joists or wood floor without joists are closer than 18 inches or wood girders are closer than 12 inches to the exposed ground in crawl space.
   b. Wood Framing members including wood sheathing which rest on exterior foundation walls and are less than 8inches from the exposed earth.
   c. Wood framing members or furring strips attached directly to the interior of exterior or concrete walls below grade.
   d. Wood sleepers and sill plates on concrete or masonry slab that is in direct contact with earth.
   e. Wood Girder ends supported by exterior masonry or concrete walls unless 1/2 inch airspace is provided on top, sides, and end.
   f. Wood Siding closer than 6 inches to earth.
   g. Posts or columns supported directly on a footing unless separated by an impervious moisture barrier and a minimum 6 inches above grade and 1 inch above slab where a slab exists or 8 inches above earth on a concrete pier where no slab exists.
   h. Portions of Glued-laminated timbers exposed to weather.
4. Wood in contact with Ground (exposed earth) or fresh water shall be preservative treated using water-borne preservatives in accordance with AWPA U1, with use category UC4C.
5. Wood member that form supports of buildings, balconies, porches, or similar permanent building appurtenances where such members are exposed to the weather without adequate protection from the roof, eave, overhang, etc. to prevent water accumulation on the surface or between joints shall be preservative treated using water-borne preservatives in accordance with AWPA U1 with use category UC3A.
6. Other wood members noted in the drawings shall be preservative treated using water-borne preservatives in accordance with AWPA U1 with use category UC3A.

C. All wood headers, beams, and top plates shall be no. 2 Southern Yellow Pine or Douglas Fir.

D. Roof sheathing: 5/8" APA rated sheathing with an exposure 1 rating. Panels shall be continuous over two or more spans with the long dimension oriented perpendicular to the framing members. Nail with 8d (2 1/2" X 0.134) common nails at 6" on center at supported edges and 12" on center at intermediate supports. Stagger joints in sheathing and provide 1/8" gap between panel joints.

E. Solid 2x blocking or bandboard shall be provided at supports and cantilever ends of all wood joists, and between supports in rows not exceeding 8'-0" apart.

F. All framing members framing into the side of a header shall be attached using metal joist hangers of type "LU" as manufactured by the Simpson Company or equal. The hanger shall be sized and installed in accordance with the manufacturer's recommendations for the size of joist supported.

G. Nailing and attachment of all framing members and sheathing shall be as specified in the International Building Code Nailing Schedule unless noted otherwise on the Structural Drawings. Common wire nails or spikes, or galvanized box nails shall be used for all framing unless noted otherwise on the Structural Drawings.

H. Simpson Strong Tie steel connectors in contact with Pressure Treated Lumber shall the following composition/ finish:

| Usage | Type of Preservative Retention Level | Simpson Finish |
|---|---|---|
| Interior | SBX/DOT | G90 |
| Interior/Exterior | ACQ (All) / 0.40 pcf (max) | HDG / ZMAX |
| Interior/Exterior | CBA-A / 0.41 pcf (max) | HDG / ZMAX |
| Interior/Exterior | CA-B / 0.21 pcf (max) | HDG / ZMAX |

Uncertain or retention levels greater than noted above will require Type 304 or 316 Stainless Steel connectors and fasteners.

I. As an alternate, plates may be attached to concrete foundation elements with power actuated fasteners. Provide washers at least 0.08 inches thick, and 1.1 inches square or 1.425 inches in diameter at each fastener. Fasteners shall be 3" long and shall have a minimum shank diameter of 0.145 inches. Provide two fasteners located 6 and 10 inches from the end of each sill plate piece, and then at a maximum spacing of 18 inches on center maximum at exterior walls and at interior party walls. At interior non-load bearing partitions, fasteners may be spaced at 36" on center, maximum. Fasteners shall be Hilti X-CR 72P8 pins or equal. Submit manufacturer's information on fastener to be used prior to start of construction.

J. All bolts and lag screws shall have standard washers. All anchor and expansion bolts used in wood to concrete connections in crawlspace areas shall be hot dip galvanized or stainless steel.

K. Refer to the Architectural Drawings for additional wood framing members. Provide additional wood framing members shown on the Architectural Drawings even though they may not be shown on the Structural Drawings.

## GLUE LAMINATED WOOD

A. Glue laminated wood members shall be southern pine or douglas fir, with grade combinations that furnish a minimum allowable extreme fiber stress in bending of 2,400 pounds per square inch in the tension zone.

B. Members noted to be "balanced" shall be provided with laminations conforming to tension zone requirements in both the top and bottom of the member resulting in a minimum extreme fiber bending stress in bending of 2400 pounds per square inch in both the tension and compression zones.

C. Members noted "T" or "C" on the drawings are loaded primarily in tension and compression, respectively. Axially loaded members shall be furnished with grade combinations that furnish a minimum allowable stress in tension parallel to grain of 1000 pounds per square inch and in compression parallel to grain of 1550 pounds per square inch for four or more laminations.

D. Members shall conform to the latest edition of "Standard Specifications for Structural Glued Laminated Timber of Softwood Species (AITC 117)," The American Institute of Timber Construction.

E. Members to be covered shall be AITC Industrial Appearance Grade. Exposed members shall be AITC Architectural (or Premium) appearance grade.

F. All holes for bolts or connectors shall be shop drilled using templates. Bolt holes shall be 1/16" larger than bolt diameter.

G. Provide standard camber in all members to compensate for short and long term dead load deflection, unless camber is shown on the Structural Drawings.

## COMPOSITE WOOD MEMBERS

A. Where noted on the Structural Drawings, joists shall be either Parallel Strand Lumber (PSL) as specified on the drawings with the following properties.
1. Parallel Strand Lumber (PSL):
   a. Elastic Modulus: 1,800,000 psi
   b. Allowable Bending Stress: 2,400 psf

B. Do not notch joists or beams. Drill holes through webs of engineered wood members for mechanical, electrical or plumbing services in accordance with the recommendations of the engineered wood product manufacturer.

C. Multiple wood beams up to three members thick shall be nailed together with three rows of 12d nails at 12" on center. Four or more multiple wood beams and any multiple wood beams utilizing beams thicker than 1 3/4" shall be bolted together with 1/2" diameter bolts top and bottom at supports and ends of the beam, then 2 rows at 24" on center, staggered top and bottom for the full length of the beam.

D. Where multiples of two 1 3/4" Micro-Lam beams are noted on the Structural Drawings, the Contractor may provide single 3 1/2" beams in lieu of double 1 3/4" beams.

E. Provide web stiffeners where required by the manufacturer for the specified support condition.

F. Connectors for double 1 3/4" beams or single 3 1/2" beams shall be Simpson HHUS410 face mounted hangers, typical unless noted otherwise on the Structural Drawings.

TEXAS PARKS & WILDLIFE

EISENHOWER STATE PARK
RESTROOM REPLACEMENT
PROJECT NUMBER: 1210136

DATE: 01/22/2021
DESIGNED BY: DW
DRAWN BY: CM
REVIEWED BY: DW
REVISED:
REVISED:
REVISED:

SHEET TITLE
STRUCTURAL NOTES

01/22/2021

shaping the built environment
JQ Infrastructure
JQ INFRASTRUCTURE, LLC
3017 WEST 7TH STREET, SUITE 400
817.546.7200
FORT WORTH, TEXAS 76107
JQENG.COM
PROJECT NO: 4200137
TBPE FIRM F-7986
STATE OF TEXAS
DAVID A. WALKER
132006
LICENSED
PROFESSIONAL ENGINEER

SHEET NUMBER
S102

## ABBREVIATIONS

| | | |
|---|---|---|
| ABV. | - | ABOVE |
| A.F.F. | - | ABOVE FINISHED FLOOR |
| ADDN'L. | - | ADDITIONAL |
| ADH. | - | ADHESIVE |
| ADJ. | - | ADJACENT |
| AGGR. | - | AGGREGATE |
| A/C | - | AIR CONDITIONER |
| AHU | - | AIR HANDLING UNIT |
| ALT. | - | ALTERNATE |
| ALUM. | - | ALUMINUM |
| A.C.I. | - | AMERICAN CONCRETE INSTITUTE |
| A.I.S.C. | - | AMERICAN INSTITUE OF STEEL CONSTRUCTION |
| A.B. | - | ANCHOR BOLT |
| & | - | AND |
| L | - | ANGLE |
| APPD. | - | APPROVED |
| APPROX. | - | APPROXIMATE |
| ARCH. | - | ARCHITECT |
| ARCH'L | - | ARCHITECTURAL |
| A.E.C. | - | ARCHITECTURALLY EXPOSED CONCRETE |
| A.E.S.S. | - | ARCHITECTURALLY EXPOSED STRUCTURAL STEEL |
| @ | - | AT |
| B.F. | - | BACK FACE |
| B. TO B. | - | BACK TO BACK |
| BSMT. | - | BASEMENT |
| BM. | - | BEAM |
| BRG. | - | BEARING |
| B.F.F. | - | BELOW FINISH FLOOR |
| BTWN. | - | BETWEEN |
| BEV(D) | - | BEVEL(ED) |
| BLK. | - | BLOCK |
| B.L. | - | BLOCK LINTEL |
| BLKG. | - | BLOCKING |
| BOT. | - | BOTTOM |
| B.O. | - | BOTTOM OF |
| B.O.S. | - | BOTTOM OF STEEL |
| BRKT. | - | BRACKET |
| BR.L. | - | BRICKLEDGE |
| BRDG. | - | BRIDGING |
| BLDG. | - | BUILDING |
| C | - | CAMBER |
| C.I.P. | - | CAST-IN-PLACE |
| CLG. | - | CELING |
| C.L. | - | CENTER LINE |
| C.G. | - | CENTER OF GRAVITY |
| C.G.S. | - | CENTER OF GRAVITY OR STRAND |
| CTR'D. | - | CENTERED |
| CLR. | - | CLEAR OR CLEARANCE |
| CFS | - | COLD FORMED STEEL |
| COL. | - | COLUMN |
| C OR COMP. | - | COMPRESSION |
| CONC. | - | CONCRETE |
| CMU | - | CONCRETE MASONRY UNIT |
| CONN(S) | - | CONNECTION(S) |
| CONST. | - | CONSTRUCTION |
| CONST. JT. | - | CONSTRUCTION JOINT |
| CONT. | - | CONTINUOUS |
| CONTR. | - | CONTRACTOR |
| C.J. | - | CONTROL JOINT |
| COORD. | - | COORDINATE |
| COV. PL. | - | COVER PLATE |
| D.L. | - | DEAD LOAD |
| D.B.A. | - | DEFORMED BAR ANCHOR |
| D. | - | DEPTH |
| DTL. | - | DETAIL |
| DIAG. | - | DIAGONAL |
| DIA OR Ø | - | DIAMETER |
| DIM(S). | - | DIMENSION(S) |
| DBL. | - | DOUBLE |
| XX-STR | - | DOUBLE EXTRA STRONG |
| DVTL. | - | DOVETAIL |
| DWL(S). | - | DOWEL(S) |
| DN. | - | DOWN |
| DS. | - | DOWNSPOUT |
| DWG(S). | - | DRAWING(S) |
| EA. | - | EACH |
| E.F. | - | EACH FACE |
| E.W. | - | EACH WAY |
| E.O.D. | - | EDGE OF DECK |
| ELEC. | - | ELECTRICAL |
| EL. | - | ELEVATION |
| ELEV. | - | ELEVATOR |
| EMBED. | - | EMBEDMENT |
| ENGR. | - | ENGINEER |
| EQ. | - | EQUAL |
| EQUIP. | - | EQUIPMENT |
| EF | - | EXHAUST FAN |
| (E) | - | EXIST. |
| EXIST. | - | EXISTING |
| EXP. | - | EXPANSION |
| E.J. | - | EXPANSION JOINT |
| EXT. | - | EXTERIOR |
| X-STR | - | EXTRA STRONG |
| FABR. | - | FABRICATOR |
| F. TO F. | - | FACE TO FACE |
| F.S. | - | FAR SIDE |
| F.V. | - | FIELD VERIFY |
| FIN(D) | - | FINISH(ED) |
| FIN. FL. | - | FINISHED FLOOR |
| FP. | - | FIREPROOF(ING) |
| FLG. | - | FLANGE |
| FL. | - | FLOOR |
| F.D. | - | FLOOR DRAIN |
| FT. | - | FOOT (OR) FEET |
| FDN. | - | FOUNDATION |
| FRMG | - | FRAMING |
| F.P. | - | FULL PENETRATION |
| GA. | - | GAGE OR GAUGE |
| GALV. | - | GALVANIZED |
| G.C. | - | GENERAL CONTRACTOR |
| GR. | - | GRADE |
| GR. BM. | - | GRADE BEAM |
| H.S.A. | - | HEADED STUD ANCHOR |
| HT. | - | HEIGHT |
| H.P. | - | HIGH POINT |
| HSS | - | HOLLOW STRUCTURAL SECTION |
| HK. | - | HOOK |
| HORIZ. | - | HORIZONTAL |
| H.B. | - | HORIZONTAL BRACE |
| H.D. | - | HOT-DIP |
| IN. | - | INCH |
| INFO. | - | INFORMATION |
| I.D. | - | INSIDE DIAMETER |
| I.F. | - | INSIDE FACE |
| INT. | - | INTERIOR |
| INTERM. | - | INTERMEDIATE |
| JT. | - | JOINT |
| J.G. | - | JOIST GIRDER |
| JST(S) | - | JOIST(S) |
| KLF | - | KIP PER LINEAR FOOT |
| KSF | - | KIP PER SQUARE FOOT |
| KSI | - | KIP PER SQUARE INCH |
| K | - | KIPS (1000 LBS) |
| L. | - | LENGTH |
| L.W. | - | LIGHTWEIGHT |
| L.W.C. | - | LIGHTWEIGHT CONCRETE |
| L.L. | - | LIVE LOAD |
| LOC. | - | LOCATION |
| LLH | - | LONG LEG HORIZONTAL |
| LLV | - | LONG LEG VERTICAL |
| LSH | - | LONG SIDE HORIZONTAL |
| LSV | - | LONG SIDE VERTICAL |
| LSL | - | LONG SLOTTED HOLE |
| LONG | - | LONGITUDINAL |
| L.P. | - | LOW POINT |
| MFR. | - | MANUFACTURE(R) |
| MAS. | - | MASONRY |
| MAT. | - | MATERIAL |
| MAX. | - | MAXIMUM |
| MECH. | - | MECHANICAL |
| MEP | - | MECHANICAL, ELECTRICAL, PLUMBING |
| MTL. | - | METAL |
| MEZZ. | - | MEZZANINE |
| MID. | - | MIDDLE |
| MIN. | - | MINIMUM |
| MISC. | - | MISCELLANEOUS |
| M | - | MOMENT |
| M.C. | - | MOMENT CONNECTION(S) |
| N.F. | - | NEAR FACE |
| NOM. | - | NOMINAL |
| N.S. | - | NON-SHRINK |
| N/A | - | NOT APPLICABLE |
| N.I.C. | - | NOT IN CONTRACT |
| N.T.S. | - | NOT TO SCALE |
| NO. OR # | - | NUMBER |
| O.C. | - | ON CENTER |
| OPNG(S) | - | OPENING(S) |
| OPP. | - | OPPOSITE |
| O.H. | - | OPPOSITE HAND |
| O.D. | - | OUTSIDE DIAMATER |
| O.F. | - | OUTSIDE FACE |
| OVS | - | OVER-SIZED HOLE |
| P | - | PAN |
| P.J. | - | PANEL JOINT |
| PAR. | - | PARALLEL |
| PERP. | - | PERPENDICULAR |
| PC. | - | PIECE |
| PL. | - | PLATE |
| PT. | - | POINT |
| P-T | - | POST-TENSION(ED) |
| # OR LBS. | - | POUNDS |
| PCF | - | POUNDS PER CUBIC FOOT |
| PLF | - | POUNDS PER LINEAR FOOT |
| PSF | - | POUNDS PER SQUARE FOOT |
| PSI | - | POUNDS PER SQUARE INCH |
| P.E.M.B. | - | PRE-ENGINEERED METAL BUILDING |
| P/C | - | PRECAST CONCRETE |
| PREFAB. | - | PREFABRICATED |
| PRELIM. | - | PRELIMINARY |
| P.T. | - | PRESSURE TREATED |
| PROJ. | - | PROJECTION |
| QTY. | - | QUANTITY |
| R | - | RADIUS |
| REINF. | - | REINFORCE(ING)(ED)(MENT) |
| RCP | - | REINFORCED CONCRETE PIPE |
| REM. | - | REMAINDER |
| REQ. | - | REQUIRE |
| REQ'D. | - | REQUIRED |
| RET. SYS. | - | RETENTION SYSTEM |
| RIS. | - | RISER |
| RF. | - | ROOF |
| R.D. | - | ROOF DRAIN |
| R.T.U. | - | ROOF TOP UNIT |
| RM. | - | ROOM |
| R.O. | - | ROUGH OPENING |
| RND. | - | ROUND |
| SCHED. | - | SCHEDULE(D) |
| SECT. | - | SECTION |
| V | - | SHEAR |
| SHT. | - | SHEET |
| SSL | - | SHEET SHORT SLOTTED HOLE |
| SW | - | SIDEWALK |
| SIM. | - | SIMILAR |
| S.O.G. | - | SLAB ON GRADE |
| SPA. | - | SPACE |
| SPEC(S) | - | SPECIFICATION(S) |
| SPEC'D | - | SPECIFIED |
| SQ. | - | SQUARE |
| S.F. | - | SQUARE FOOT |
| STAGG. | - | STAGGERED |
| S.S. | - | STAINLESS STEEL |
| STD. | - | STANDARD |
| STL. | - | STEEL |
| S.J.I. | - | STEEL JOIST INSTITUE |
| STIFF | - | STIFFENER |
| STIRR. | - | STIRRUPS |
| STR. | - | STRAIGHT |
| STRUCT'L | - | STRUCTURAL |
| STRUCT. | - | STRUCTURE |
| SUBCONTR. | - | SUBCONTRACTOR |
| SUPT(S). | - | SUPPORT(S) |
| TEMP. | - | TEMPERATURE |
| T | - | TENSION |
| TERR. | - | TERRAZZO |
| THK. | - | THICK |
| THRD. | - | THREAD(ED) |
| T&G | - | TONGUE AND GROOVE |
| T&B | - | TOP AND BOTTOM |
| T.O. | - | TOP OF |
| T.O.B. | - | TOP OF BEAM |
| T.O.C. | - | TOP OF CONCRETE |
| T.O.F. | - | TOP OF FOOTING |
| T.O.J. | - | TOP OF JOIST |
| T.O.P. | - | TOP OF PIER |
| T.O.P.C. | - | TOP OF PIER (PIPE) CAP |
| T.O.S. | - | TOP OF STEEL |
| T.O.W. | - | TOP OF WALL |
| TRANSV. | - | TRANSVERSE |
| TR. | - | TREAD |
| TYP. | - | TYPICAL |
| U.N.O. | - | UNLESS NOTED OTHERWISE |
| VERT. | - | VERTICAL |
| V.B. | - | VERTICAL BRACE |
| WPFG. | - | WATERPROOFING |
| WS. | - | WATERSTOP |
| WT. | - | WEIGHT |
| W.W.M. | - | WELDED WIRE MESH |
| W. | - | WIDTH |
| W.L. | - | WIND LOAD |
| WDW. | - | WINDOW |
| W/ | - | WITH |
| W/O | - | WITHOUT |
| W.D. | - | WOOD |
| W.P. | - | WORK POINT |

## SYMBOLS LEGEND

| SYMBOL | DESCRIPTION |
|---|---|
| BEAM SIZE WXXxXX; R=XK; REACTION (SERVICE LOAD) | STEEL BEAM |
| PIER TYPE, T.O.PIER EL. T.O.PIER DETAIL | CONCRETE PIER |
| FTG. TYPE, T.O.FTG. EL. T.O.FTG. DETAIL | CONCRETE FTG. |
| MOMENT CONNECTION; BEAM SIZE WXXxXX; MOMENT CONNECTION | STEEL BEAM MOMENT CONNECTION |
| COLUMN SIZE BASE PLATE TYPE | STEEL COLUMN |
| # | COLUMN GRID |
| | SLAB OR DECK SPAN DIRECTION |
| | DROP IN SLAB OR DECK |
| | DROP AND SLOPE IN SLAB OR DECK |
| | SLOPE IN SLAB OR DECK |
| | LOAD-BEARING MASONRY WALL |
| | NON LOAD-BEARING MASONRY WALL |
| | WINDOW IN MASONRY WALL |
| | DOOR IN MASONRY WALL |
| | ROOF TOP UNIT (RTU) |

TEXAS PARKS & WILDLIFE

# EISENHOWER STATE PARK

**RESTROOM REPLACEMENT**

PROJECT NUMBER: 1210136

DATE: 01/22/2021
DESIGNED BY: DW
DRAWN BY: CM
REVIEWED BY: DW
REVISED:
REVISED:
REVISED:

**SHEET TITLE**
ABBREVIATIONS & SYMBOLS LEGEND

01/22/2021


shaping the built environment
JQ Infrastructure
JQ INFRASTRUCTURE, LLC
3017 WEST 7TH STREET, SUITE 400
817.546.7200
FORT WORTH, TEXAS 76107
JQIENG.COM
TBPE FIRM F-7986
PROJECT NO: 4200137
STATE OF TEXAS
DAVID A. WALKER
132006
LICENSED
PROFESSIONAL ENGINEER


SHEET NUMBER

**S103**

SPECIAL INSPECTIONS

1. Special Inspections shall be performed in accordance with Chapter 17 of the 2015 International Building Code (IBC) by a Special Inspector hired by the Owner to perform the Special Inspections listed below. The Special Inspector shall be qualified by an approved agency according to the City's building official to perform the special inspections for which they will be undertaking. The Contractor shall coordinate with and notify the Special Inspector of all tests. The Special Inspector shall be responsible to verify that the items detailed in the Construction Documents were built accordingly and shall prepare, sign, and furnish inspection reports to the building official and the Architect for all time spent at the site. The Inspector shall bring discrepancies to the immediate attention of the General Contractor for correction. If the discrepancies are not corrected, the discrepancies shall be brought to the attention of the building official and to the Architect prior to the completion of that phase of the work. These special inspections are in addition to the other inspections listed in these Structural Notes or Project Specifications.

2. Where structural load-bearing members and assemblies are shop fabricated, the Special Inspector shall verify that the fabricator maintains detailed fabrication and quality control procedures that provide a basis for inspection control of the workmanship and the fabricator's ability to conform to the Construction Documents and Referenced Standards, unless the fabricator is registered and approved to perform such work without special inspection.

VERIFICATION AND INSPECTION TASKS FOR WELDING OF STRUCTURAL STEEL[1] (AISC 360-10 Table N5.4)

| SPECIAL INSPECTION REQUIRED | VERIFICATION AND INSPECTION | INSPECTION FREQUENCY | | REFERENCED STANDARD | IBC REFERENCE |
|---|---|---|---|---|---|
| | | CONTINUOUS | PERIODIC | | |
| | 1. Inspection tasks prior to welding: | | | | |
| YES | a. Welding procedure specifications (WPSs) available | X | -- | AISC 360-10 N5.4-1: AWS D1.1 | 1705.2.1 |
| YES | b. Manufacturer certifications for welding consumables available | X | -- | | |
| YES | c. Material identification (type/grade) | -- | X | | |
| YES | d. Welder identification system[2] | -- | X | | |
| YES | e. Fit-up of groove welds (including joint geometry[2])<br>1) Joint preparation<br>2) Dimensions (alignment, root opening, root face, bevel)<br>3) Cleanliness (condition of steel surfaces)<br>4) Tacking (tack weld quality and location)<br>5) Backing type and fit (if applicable) | -- | X | | |
| YES | f. Configuration and finish of access holes[2] | -- | X | | |
| YES | g. Fit-up of fillet welds[2]<br>1) Dimensions (alignment, gaps at root)<br>2) Cleanliness (condition of steel surfaces)<br>3) Tacking (tack weld quality and location) | -- | X | | |
| YES | h. Check welding equipment | -- | X | | |
| | 2. Inspection tasks during welding: | | | | |
| YES | a. Use of qualified welders | -- | X | AISC 360-10 N5.4-2: AWS D1.1 | 1705.2.1 |
| YES | b. Control and handling of welding consumables<br>1) Packaging<br>2) Exposure control | -- | X | | |
| YES | c. No welding over cracked tack welds[2] | -- | X | | |
| YES | d. Environmental conditions[2]<br>1) Wind speed within limits<br>2) Precipitation and temperature | -- | X | | |
| YES | e. WPS followed[2]<br>1) Settings on weld equipment<br>2) Travel speed<br>3) Selected welding materials<br>4) Shielding gas type/flow rate<br>5) Preheat applied<br>6) Interpass temperature maintained (min./max.)<br>7) Proper position (F, V, H, OH) | -- | X | | |
| YES | f. Welding techniques[2]<br>1) Interpass and final cleaning<br>2) Each pass within profile limitations<br>3) Each pass meets quality requirements | -- | X | | |
| | 3. Inspection tasks after welding: | | | | |
| YES | a. Welds cleaned | -- | X | AISC 360-10 N5.4-2: AWS D1.1 | 1705.2.1 |
| YES | b. Size, length and location of welds | X | -- | | |
| YES | c. Welds meet visual acceptance criteria<br>1) Crack prohibition<br>2) Weld/base-metal fusion<br>3) Crater cross section<br>4) Weld profiles<br>5) Weld size<br>6) Undercut<br>7) Porosity | X | -- | | |
| YES | d. Arc strikes | X | -- | | |
| NO | e. k-area[3] | X | -- | | |
| NO | f. Backing removed and weld tabs removed (if required) | X | -- | | |
| YES | g. Repair activities | X | -- | | |
| YES | h. Document acceptance or rejection of welded joint or member | X | -- | | |

1. Inspection tasks noted in this table are the responsibility of the Special Inspector or Quality Assurance Inspector (QAI). The fabricator and erector are responsible for all inspection tasks indicated in AISC 360-10 Section N5 and assigned to the Quality Control Inspector (QCI)

2. Inspection tasks may be coordinated with the fabricator or erector's Quality Control Inspector (QCI) where indicated with this footnote. All other tasks shall be performed by the Special Inspector.

3. When welding of doubler plates, continuity plates or stiffeners has been performed in the k-area, visually inspect the web k-area for cracks within 3 in. (75 mm) of the weld.

VERIFICATION AND INSPECTION TASKS FOR BOLTING STRUCTURAL STEEL[1] (AISC 360-10 Tables N5.6)

| SPECIAL INSPECTION REQUIRED | VERIFICATION AND INSPECTION | INSPECTION FREQUENCY | | REFERENCED STANDARD | IBC REFERENCE |
|---|---|---|---|---|---|
| | | CONTINUOUS | PERIODIC | | |
| | 1. Inspection tasks prior to bolting: | | | | |
| YES | a. Manufacturer's certifications available for fastener materials | X | -- | AISC 360-10 N5.6-1 | 1705.2.1 |
| YES | b. Fasteners marked in accordance with ASTM requirements | -- | X | | |
| YES | c. Proper fasteners selected for the joint detail (grade, type, bolt length if threads are to be excluded from shear plane) | -- | X | | |
| YES | d. Proper bolting procedure selected for joint detail[2] | -- | X | | |
| YES | e. Connecting elements, including the appropriate faying surface condition and hole preparation, if specified, meet applicable requirements | -- | X | | |
| YES | f. Pre-installation verification testing by installation personnel observed and documented for fastener assemblies and methods used | -- | X | | |
| YES | g. Proper storage provided for bolts, nuts, washers and other fastener components | -- | X | | |
| | 2. Inspection tasks during bolting: | | | | |
| YES | a. Fastener assemblies, of suitable condition, placed in all holes and washers (if required) are positioned as required[2] | -- | X | AISC 360-10 N5.6-2 | 1705.2.1 |
| YES | b. Joint brought to the snug-tight condition prior to the pretensioning operation[2] | -- | X | | |
| YES | c. Fastener component not turned by the wrench prevented from rotating.[2] | -- | X | | |
| YES | d. Fasteners are pretensioned in accordance with the RCSC Specification, progressing systematically from the most rigid point toward the free edges | -- | X | | |
| | 3. Inspection tasks after bolting: | | | | |
| YES | a. Document acceptance or rejection of bolted connections | X | -- | AISC 360-10 N5.6-3 | 1705.2.1 |

1. Inspection tasks noted in this table are the responsibility of the Special Inspector or Quality Assurance Inspector (QAI). The fabricator and erector are responsible for all inspection tasks indicated in AISC 360-10 Section N5 and assigned to the Quality Control Inspector (QCI)

2. Inspection tasks may be coordinated with the fabricator or erector's Quality Control Inspector (QCI) where indicated with this footnote. All other tasks shall be performed by the Special Inspector.

VERIFICATION AND INSPECTION OF CONCRETE CONSTRUCTION (IBC TABLE 1705.3)

| SPECIAL INSPECTION REQUIRED | VERIFICATION AND INSPECTION | INSPECTION FREQUENCY | | REFERENCED STANDARD | IBC REFERENCE |
|---|---|---|---|---|---|
| | | CONTINUOUS | PERIODIC | | |
| YES | 1. Inspection of reinforcing steel, including prestressing tendons, and placement. | -- | X | ACI 318 Ch. 20, 25.2, 25.3, 26.5.1-26.5.3 | 1908.4 |
| | 2. Reinforcing bar welding: | | | | |
| YES | a. Verify weldability of reinforcing bars other than ASTM A706 | -- | X | AWS D1.4<br>ACI 318: 26.5.4 | -- |
| YES | b. Inspect single-pass fillet welds, maximum 5/16" | -- | X | | |
| YES | c. Inspect all other welds. | X | -- | | |
| YES | 3. Inspection of anchors cast in concrete. | -- | X | ACI 318: 17.8.2 | -- |
| | 4. Inspection of post-installed anchors in hardened concrete. | | | | |
| YES | a. Adhesive anchors installed in horizontally or upwardly inclined orientations to resist sustained tension loads. | X | -- | ACI 318: 17.8.2.4 | -- |
| YES | b. Mechanical anchors and adhesive anchors not defined in 4.a. | -- | X | ACI 318: 17.8.2 | |
| YES | Special Inspector must be certified by ACI/CRSI "Adhesive Anchor Installer. A report must be submitted to the licensed design professional and building official documenting, stating how each anchor was installed, including the Manufacturer's Printed Installation Instructions per ACI 318 | -- | -- | ACI 318: 17.8.2.2<br>17.8.2.4 | |
| YES | 5. Verify use of required design mix. | -- | X | ACI 318: Ch. 19, 26.4.3, 26.4.4 | 1904.1, 1904.2, 1908.2, 1908.3 |
| YES | 6. Prior to concrete placement, fabricate specimens for strength tests, perform slump and air content tests, and determine the temperature of the concrete. | X | -- | ASTM C172<br>ASTM C31<br>ACI 318: 26.4.5, 26.12 | 1908.10 |
| YES | 7. Inspect concrete and shotcrete placement for proper application techniques. | X | -- | ACI 318: 26.4.5 | 1908.6, 1908.7, 1908.8 |
| YES | 8. Verify maintenance of specified curing temperature and techniques. | -- | X | ACI 318: 26.4.7-26.4.9 | 1908.9 |
| | 9. Inspection of prestressed concrete: | | | | |
| NO | a. Application of prestressing forces | X | -- | ACI 318: 26.9.2.1 | -- |
| NO | b. Grouting of bonded prestressing tendons | X | -- | ACI 318: 26.9.2.3 | |
| NO | 10. Inspect erection of precast concrete members. | -- | X | ACI 318: 26.8 | -- |
| NO | 11. Verify in-situ concrete strength, prior to stressing of tendons in post-tensioned concrete and prior to removal of shores and forms from beams and structural slabs. | -- | X | ACI 318: 26.10.2 | -- |
| YES | 12. Inspect formwork for shape, location and dimensions of the concrete member being formed. | -- | X | ACI 318: 26.10.1(b) | -- |

LEVEL B VERIFICATION AND INSPECTION OF MASONRY CONSTRUCTION (ACI 530 Table 3.1.2)

| SPECIAL INSPECTION REQUIRED | VERIFICATION, INSPECTION AND TESTING | INSPECTION FREQUENCY | |
|---|---|---|---|
| | | CONTINUOUS | PERIODIC |
| | MINIMUM TESTS | | |
| YES | Verification of Slump flow and VSI as delivered to the site in accordance with Article 1.5 B.1.b.3 for self-consolidating grout | -- | -- |
| YES | Verification of $f'_m$ and $f'_{AAC}$ in accordance with Article 1.4B prior to construction, except where specifically exempted by this Code | -- | -- |
| | INSPECTION TASKS | | |
| YES | 1. Verify compliance with the approved submittal | -- | X |
| | 2. As masonry construction begins, verify that the following are in compliance: | | |
| YES | a. Proportions of site-prepared mortar | -- | X |
| YES | b. Construction of mortar joints | -- | X |
| NO | c. Grade and size of prestressing tendons and anchorages | -- | X |
| YES | d. Location of reinforcement, connectors, and prestressing tendons and anchorages | -- | X |
| MO | e. Prestressing technique | -- | X |
| YES | f. Properties of thin-bed mortar for AAC masonry | X[1] | X[2] |
| | 3. Prior to grouting, verify that the following are in compliance: | | |
| YES | a. Grout space | -- | X |
| YES | b. Grade, type and size of reinforcement and anchor bolts, and prestressing tendons and anchorages | -- | X |
| YES | c. Placement of reinforcement, connectors and prestressing tendons and anchorages | -- | X |
| YES | d. Proportions of site-prepared grout and prestressing grout for bonded tendons | -- | X |
| YES | e. Construction of mortar joints | -- | X |
| | 4. Verify during construction: | | |
| YES | a. Size and location of structural elements | -- | X |
| YES | b. Type, size and location of anchors, including other details of anchorage of masonry to structural members, frames or other construction | -- | X |
| NO | c. Welding of reinforcement | X | -- |
| YES | d. Preparation, construction and protection of masonry during cold weather (temperature below 40°F (4.4°C)) or hot weather (temperature above 90°F (32.2°C)) | -- | X |
| NO | e. Application and measurement of prestressing force | X | -- |
| YES | f. Placement of grout and prestressing grout for bonded tendons is in compliance | X | -- |
| YES | g. Placement of AAC masonry units and construction of thin-bed mortar joints | X[1] | X[2] |
| YES | 5. Observe preparation of grout specimens, mortar specimens and/or prisms | -- | X |

1. Required for the first 5,000 square feet of AAC masonry.

2. Required after the first 5,000 square feet of AAC masonry.

VERIFICATION AND INSPECTION OF WOOD (IBC 1705.5)

| SPECIAL INSPECTION REQUIRED | VERIFICATION, INSPECTION AND TESTING | INSPECTION FREQUENCY | |
|---|---|---|---|
| | | CONTINUOUS | PERIODIC |
| YES | 1. Fabrication process of prefabricated wood structural elements and assemblies shall be in accordance with IBC 1704.2.5 and local amendments | -- | X |
| | 2. Inspect lateral resisting elements, including shear walls, braces, diaphragms, collectors (drag struts), and hold-downs for the following: | | |
| YES | a. Grade and thickness of framing members on building plans, including wood structural panel sheathing. | -- | X |
| YES | b. Nominal size of framing members at adjoining panel edges for diaphragms and shear walls. | -- | X |
| YES | c. Nail or staple diameter and length for diaphragms and shear walls. | -- | X |
| YES | d. Number of fastener lines and the spacing between fasteners in each line and at edge margins | -- | X |
| YES | e. Bolting, anchoring, and other fastening of components. | -- | X |
| | 3. Trusses with clear span 60'-0" or greater, inspector shall verify the following: | | |
| NO | a. Temporary installation restraint/bracing installed per approved truss submittal. | X | -- |
| NO | b. Permanent individual truss member restraint/bracing installed per approved truss submittal. | X | -- |

VERIFICATION AND INSPECTION OF SOILS (IBC TABLE 1705.6)

| SPECIAL INSPECTION REQUIRED | VERIFICATION, INSPECTION AND TESTING | INSPECTION FREQUENCY | |
|---|---|---|---|
| | | CONTINUOUS | PERIODIC |
| YES | 1. Verify materials below shallow foundations are adequate to achieve the design bearing capacity. | -- | X |
| YES | 2. Verify excavations are extended to proper depth and have reached proper material. | -- | X |
| YES | 3. Perform classification and testing of compacted fill materials. | -- | X |
| YES | 4. Verify use of proper materials, densities and lift thicknesses during placement and compaction of compacted fill. | X | -- |
| YES | 5. Prior to placement of compacted fill, inspect subgrade and verify that site has been prepared properly. | -- | X |

TEXAS PARKS & WILDLIFE

EISENHOWER STATE PARK
RESTROOM REPLACEMENT
PROJECT NUMBER: 1210136

DATE: 01/22/2021
DESIGNED BY: DW
DRAWN BY: CM
REVIEWED BY: DW
REVISED:
REVISED:
REVISED:

SHEET TITLE
SPECIAL INSPECTIONS

SHEET NUMBER
S104

01/22/2021

shaping the built environment
JQ Infrastructure
JQ INFRASTRUCTURE, LLC
3017 WEST 7TH STREET, SUITE 400
817.546.7200
FORT WORTH, TEXAS 76107
JQIENG.COM
TBPE FIRM F-7986
PROJECT NO: 4200137
STATE OF TEXAS
DAVID A. WALKER
132006
LICENSED
PROFESSIONAL ENGINEER

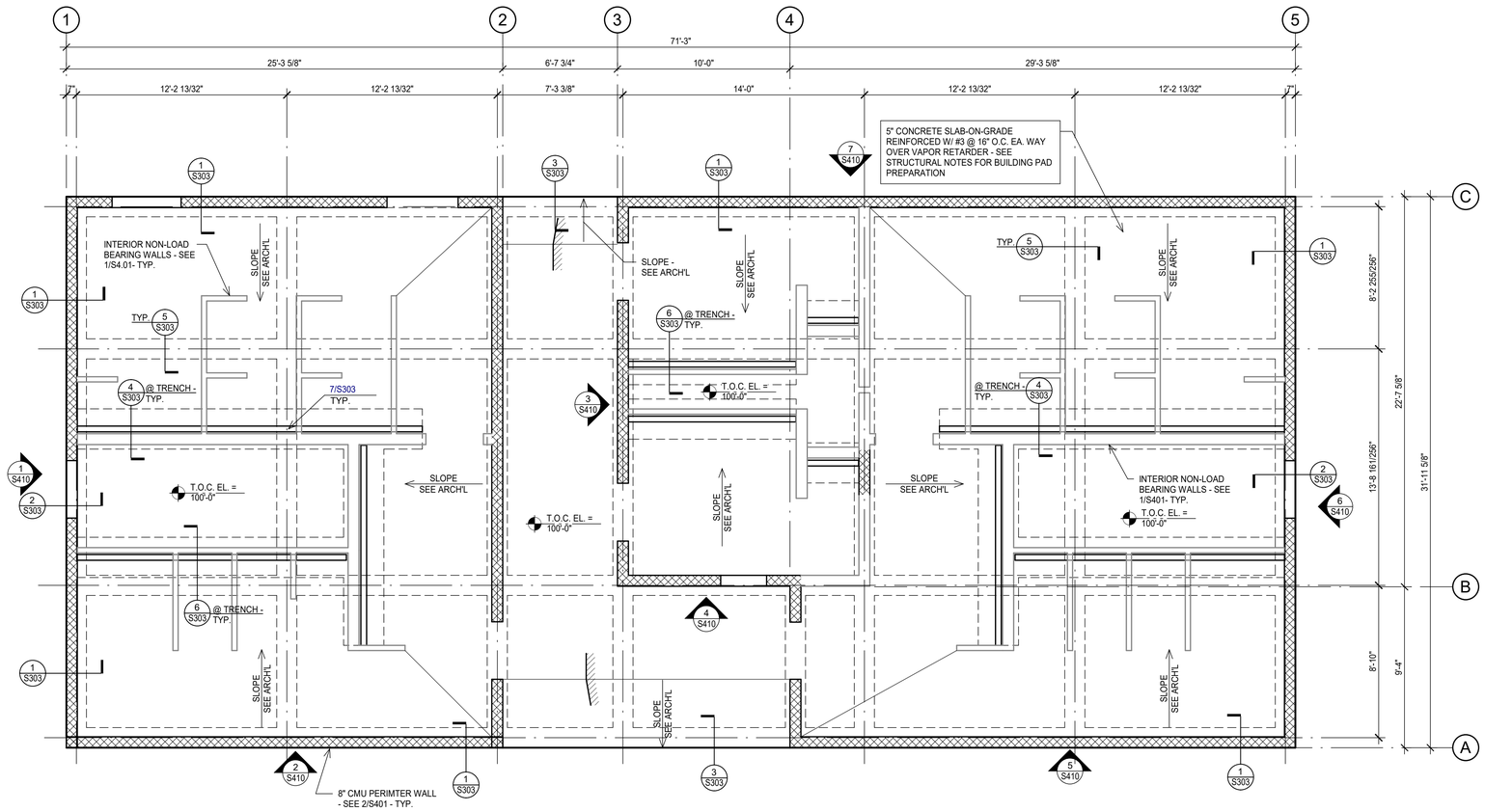


north

# 1 FOUNDATION PLAN

SCALE: 1/4" = 1'-0"

PLAN NOTES:

1. FINISH FLOOR ELEVATION = 100'-0", UNLESS NOTED OTHERWISE. ACTUAL ELEVATION 690.00' = 100'-0".
2. TOP OF CONCRETE ELEVATION (T.O.C. EL.) = FINISH FLOOR. UNLESS RECESSED TO RECEIVE FLOORING MATERIALS.
3. REFER TO THE ARCHITECTURAL DRAWINGS FOR EXACT LOCATIONS OF FLOOR RECESSES, DROPS AND SLOPES NOT DIMENSIONED ON PLAN.
4. TYPICAL CONCRETE SLAB THICKNESS IS 5" (OVERALL), UNLESS NOTED OTHERWISE.
5. VERIFY AND COORDINATE ALL DIMENSIONS W/ ARCHITECTRUAL DRAWINGS.
6. SEE 1/S302 FOR PERMISSIBLE UTILITY TRENCHING LOCATION DETAIL.
7. SEE 8/S303 FOR COUNTERTOP SUPPORT. REFERENCE 4/A811 FOR ADDITIONAL INFORMATION.
8. SEE 9/S303 FOR BENCH SUPPORT. REFERENCE 12/A811 FOR ADDITIONAL INFORMATION.

SHEET INDEX:

| | |
|---|---|
| STRUCTURAL NOTES | -S101, S102 |
| TYPICAL CONCRETE DETAILS | -S301, S302 |
| TYPICAL MASONRY DETAILS | -S401, S402 |

TEXAS PARKS & WILDLIFE

# EISENHOWER STATE PARK

RESTROOM REPLACEMENT

PROJECT NUMBER: 1210136

DATE: 01/22/2021
DESIGNED BY: DW
DRAWN BY: CM
REVIEWED BY: DW
REVISED:
REVISED:
REVISED:

SHEET TITLE
FOUNDATION PLAN

01/22/2021

shaping the built environment
JQ Infrastructure
JQ INFRASTRUCTURE, LLC
3017 WEST 7TH STREET, SUITE 400
817.546.7200
FORT WORTH, TEXAS 76107
JQIENG.COM
PROJECT NO: 4200137
TBPE FIRM F-7986
STATE OF TEXAS
DAVID A. WALKER
132006
LICENSED
PROFESSIONAL ENGINEER

SHEET NUMBER
S201

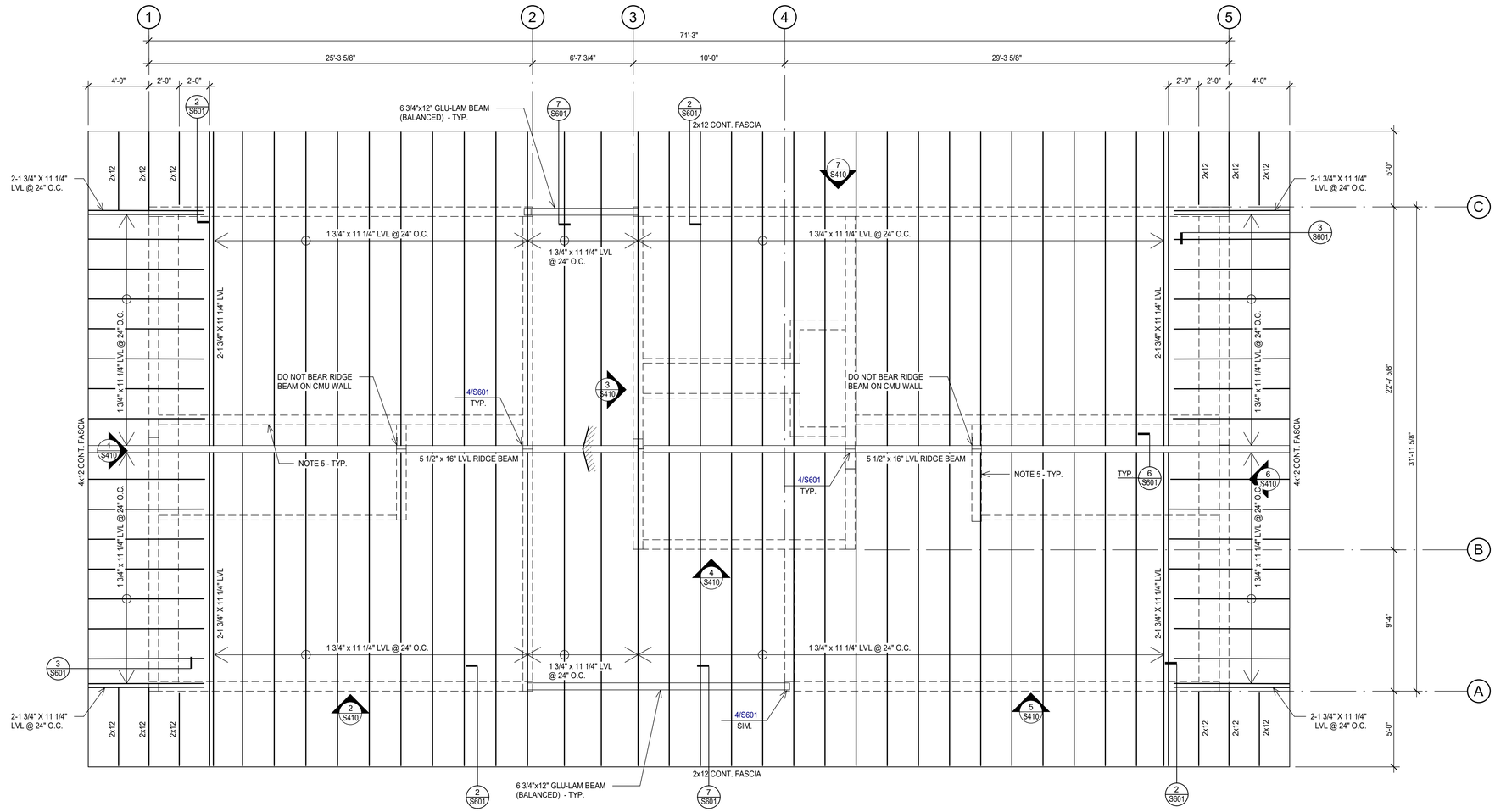


north

# 1 ROOF FRAMING PLAN

SCALE: 1/4" = 1'-0"

PLAN NOTES:

1. SEE ARCHITECTURAL DRAWINGS FOR EXACT LOCATIONS OF ROOF SLOPES, HIPS, VALLEYS, AND RIDGES NOT SPECIFICALLY DIMENSIONED.
2. VERIFY AND COORDINATE ALL DIMENSIONS WITH ARCHITECTURAL DRAWINGS.
3. SEE STRUCTURAL NOTES FOR ROOF SHEATHING REQUIREMENTS.
4. ROOF DIAPHRAGM SHALL BE INSTALLED AS DIAPHRAGM AS DEFINED BY BUILDING CODE.
5. SEE DETAIL 5/S601 FOR INTERIOR WALL BRACING.
6. SEE DETAIL 9/S402 FOR ARCHITECTURAL BEAM CONNECTION DETAIL. SEE SHEET A811 FOR ADDITIONAL INFORMATION.

SHEET INDEX:

| | |
|---|---|
| STRUCTURAL NOTES | -S101, S102 |
| TYPICAL MASONRY DETAILS | -S401, S402 |
| TYPICAL WOOD DETAILS | -S601 |

TEXAS PARKS & WILDLIFE

# EISENHOWER STATE PARK

**RESTROOM REPLACEMENT**

PROJECT NUMBER: 1210136

DATE: 01/22/2021
DESIGNED BY: DW
DRAWN BY: CM
REVIEWED BY: DW
REVISED:
REVISED:
REVISED:

**SHEET TITLE**
ROOF FRAMING PLAN

SHEET NUMBER
**S202**

01/22/2021

shaping the built environment
JQ Infrastructure
JQ INFRASTRUCTURE, LLC
3017 WEST 7TH STREET, SUITE 400
817.546.7200
FORT WORTH, TEXAS 76107
JQENG.COM
TBPE FIRM F-7986
PROJECT NO: 4200137
STATE OF TEXAS
DAVID A. WALKER
132006
LICENSED PROFESSIONAL ENGINEER

NOTE:
PROVIDE ONE OF THE FOLLOWING SLIP DOWELS:
- PNA CONSTRUCTION TECHNOLOGIES 1/4" x 4 1/2" x 4 1/2" "DIAMOND DOWEL" PLATE DOWEL SYSTEM.
- GREENSTREAK 5/8" DIA. SMOOTH x 24" "SPEED DOWEL" SYSTEM.
- 1/2" DIA. x 2'-0" A36 SMOOTH ROD.

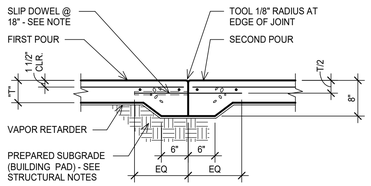


CONSTRUCTION JOINT

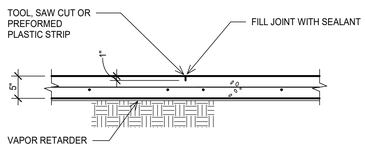


CONTROL JOINT

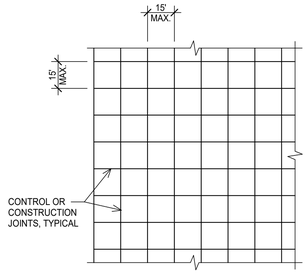


SLAB-ON-GRADE NOTES:

1. SEE PLAN FOR THICKNESS OF SLAB (T) AND REINFORCING.
2. SAWCUT JOINTS WITH IN THE TIME FRAME NOTED BELOW:
   a. 12 HOURS FOR SLABS COVERED BY FINISHES OR NON PUBLIC SPACES.
   b. 4 HOUR FOR SLABS EXPOSED TO PUBLIC VIEW OR WHERE NOTED "SOFF-CUT" BRAND SAW SHALL BE USED.
3. IF METAL FORMS ARE USED, REMOVE THEM BEFORE PLACING ADJACENT SLAB.
4. FOR SLABS WITH THICKNESS (T) GREATER THAN 6", THICKENED EDGES ARE NOT REQUIRED AT JOINTS.
5. PROVIDE A CONSTRUCTION OR A CONTROL JOINT ON THE CENTERLINES OF COLUMNS.
6. LAP REINFORCING 38 BAR DIAMETER MINIMUM.

1 TYPICAL SLAB-ON-GRADE DETAIL
NO SCALE

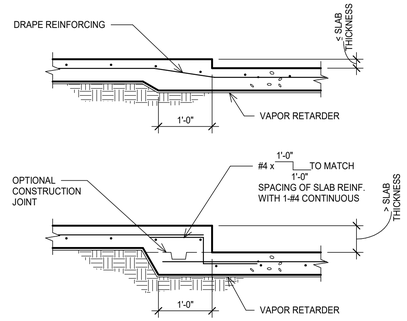


2 TYPICAL DROP IN SLAB-ON-GRADE DETAIL
NO SCALE

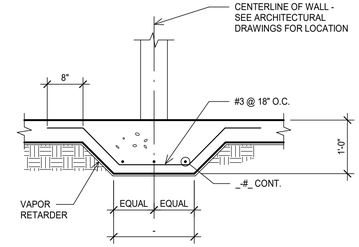


3 TYPICAL SLAB-ON-GRADE STIFFENER BEAM DETAIL
NO SCALE

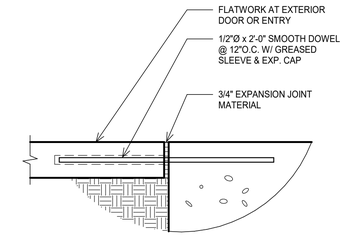


4 TYPICAL FLATWORK AT EXTERIOR DOORS AND ENTRIES DETAIL
NO SCALE

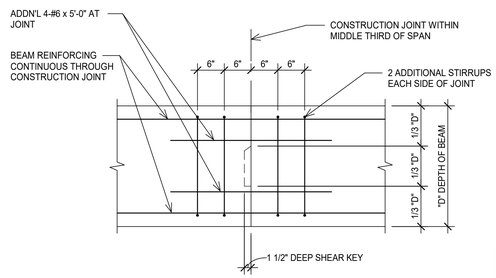


ELEVATION

| KEY WIDTH | |
|---|---|
| GRADEBEAM WIDTH "T" | W |
| ≤ 12" | 3 1/2" |
| 12" TO 16" | 5 1/2" |
| 16" TO 20" | 7 1/4" |
| 20" TO 24" | 9 1/4" |
| 24" TO 30" | 11 1/4" |

NOTES:
1. THIS DETAIL APPLIES TO BEAMS ≤ 4'-0" DEPTH.

5 TYPICAL CONCRETE BEAM CONSTRUCTION JOINT DETAIL
NO SCALE

NOTES:

1. MATCH SIZE, LOCATION AND NUMBER OF HORIZONTAL BEAM AND WALL BARS, EXCEPT THAT WHERE THERE ARE MORE THAN 2 TOP OR BOTTOM BARS, ONLY THE INSIDE AND OUTSIDE BARS MUST BE MATCHED.
2. WHERE 90 DEGREE HOOKS ARE PROVIDED FOR TOP BARS CORNER BARS MAY BE OMITTED AT TOP. WHERE 90 DEGREE HOOKS ARE PROVIDED FOR BOTTOM BARS, CORNER BARS MAY BE OMITTED AT BOTTOM.

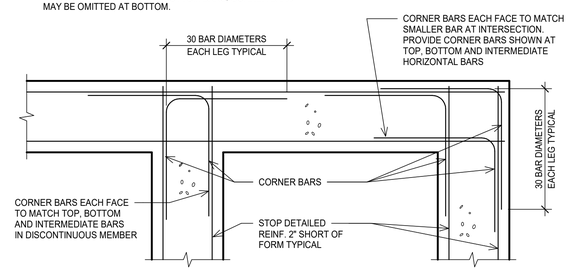


PLAN

6 TYPICAL CORNER BARS AT WALL OR GRADE BEAM INTERSECTION DETAIL
NO SCALE

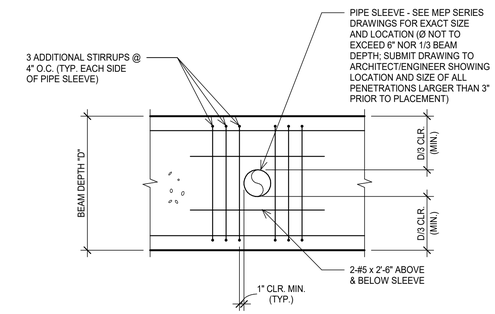


ELEVATION

7 TYPICAL HORIZONTAL GRADE BEAM PENETRATION DETAIL
NO SCALE

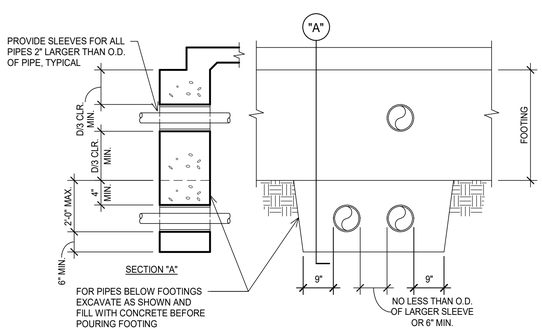


NOTES:

1. WHERE PIPES ARE MORE THAN 2'-0" BELOW FOOTING. BACKFILL WITH SOIL AS SPECIFIED.

8 TYPICAL PIPES AND TRENCHES AT FOOTINGS
NO SCALE

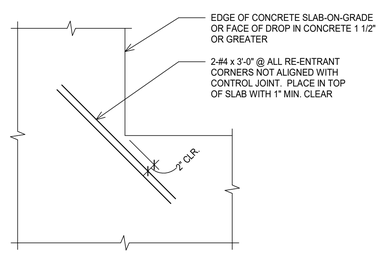


PLAN

9 TYPICAL SLAB-ON-GRADE RE-ENTRANT CORNER REINFORCING DETAIL
NO SCALE

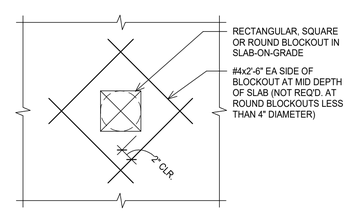


PLAN

10 TYPICAL ADDITIONAL REINFORCING AT BLOCKOUT IN SLAB-ON-GRADE DETAIL
NO SCALE

DOWEL SCHEDULE

| MARK | SIZE | A | B |
|---|---|---|---|
| DWL.-A | #4 | 8" | 3'-0" |
| DWL.-B | #4 | 3'-0" | 3'-0" |
| DWL.-C | #4 | - | 4'-0" |
| DWL.-D | 3/4" DIA. THD. | - | 4'-0" |
| DWL.-E | 1/2" DIA. THD. | - | 3'-0" |

NOTES:

1. SCHEDULED DOWELS ARE MARKED "DWL." ON THE SECTIONS AND DETAILS.
2. DOWEL SPACING TO BE THE SAME AS VERTICAL BEAM OR WALL REINFORCEMENT UNLESS NOTED OTHERWISE ON DETAILS.
3. DOWELS WITH "THD." IN "SIZE" COLUMN SHALL BE RICHMOND "CONTINUOUS THREADED LAGSTUD (2/25)" WITH RICHMOND "STANDARD 1/2"x4" 2/15 ANCHOR W/ WASHER" FOR 1/2" DIA. DOWELS AND "STANDARD 3/4"x6" 2/15 ANCHOR W/ WASHER" ANCHORS FOR 3/4"Ø DOWELS OR EQUAL.

11 DOWEL SCHEDULE
NO SCALE

TEXAS PARKS & WILDLIFE

EISENHOWER STATE PARK
RESTROOM REPLACEMENT
PROJECT NUMBER: 1210136

DATE: 01/22/2021
DESIGNED BY: DW
DRAWN BY: CM
REVIEWED BY: DW
REVISED:
REVISED:
REVISED:

SHEET TITLE
TYPICAL CONCRETE SECTIONS & DETAILS

SHEET NUMBER
S301

01/22/2021

shaping the built environment
JQ Infrastructure
JQ INFRASTRUCTURE, LLC
3017 WEST 7TH STREET, SUITE 400
817.546.7200
FORT WORTH, TEXAS 76107
JQENG.COM
TBPE FIRM F-7986
PROJECT NO: 4200137
STATE OF TEXAS
DAVID A. WALKER
132006
LICENSED PROFESSIONAL ENGINEER

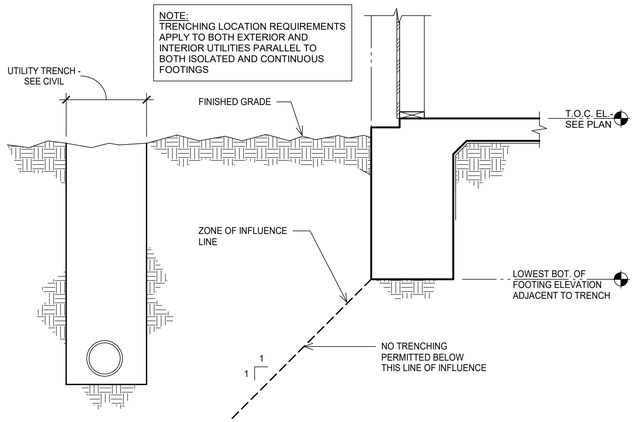


1 PERMISSIBLE UTILITY TRENCH LOCATION DETAIL
NO SCALE

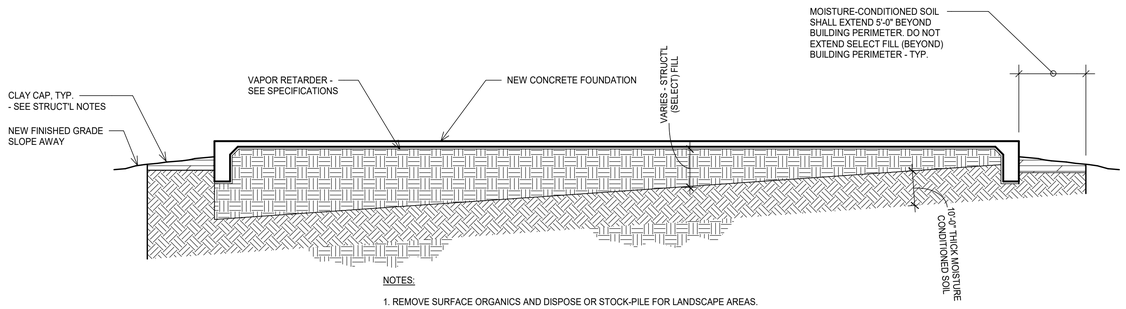


NOTES:

1. REMOVE SURFACE ORGANICS AND DISPOSE OR STOCK-PILE FOR LANDSCAPE AREAS.
2. EXCAVATE EXISTING SOILS TO 12'-0" MINIMUM BELOW EXISTING GRADE ELEVATION OR UNTIL LIMESTONE IS REACED AND STOCK-PILE FOR REUSE.
3. PROOF-ROLL, SCARIFY AND COMPACT EXPOSED SUBGRADE PER BUILDING PAD PREPARATION NOTES.
4. USE STOCK-PILED ON-SITE SOILS AT EXISTING GRADE ELEVATIONS BENEATH FUTURE SELECT FILL LAYER AS REQUIRED TO CREATE UNIFORM SELECT FILL LAYER.
5. PLACE SELECT FILL PER BUILDING PAD PREPARATION NOTES.
6. ADDITIONAL SELECT FILL ("GRADE RAISE FILL") MAY BE REQUIRED TO ACHIEVE BUILDING PAD ELEVATION REFER TO CIVIL FOR ALL GRADING REQUIREMENTS.

2 TYPICAL CROSS SECTION THRU STUCTURAL FILL PAD
NO SCALE

TEXAS PARKS & WILDLIFE

# EISENHOWER STATE PARK

**RESTROOM REPLACEMENT**

PROJECT NUMBER: 1210136

DATE: 01/22/2021
DESIGNED BY: DW
DRAWN BY: CM
REVIEWED BY: DW
REVISED:
REVISED:
REVISED:

**SHEET TITLE**
TYPICAL CONCRETE SECTIONS & DETAILS

01/22/2021

shaping the built environment
JQ Infrastructure
JQ INFRASTRUCTURE, LLC
3017 WEST 7TH STREET, SUITE 400
817.546.7200
FORT WORTH, TEXAS 76107
JQIENG.COM
TBPE FIRM F-7986
PROJECT NO: 4200137
STATE OF TEXAS
DAVID A. WALKER
132006
LICENSED
PROFESSIONAL ENGINEER

SHEET NUMBER
**S302**

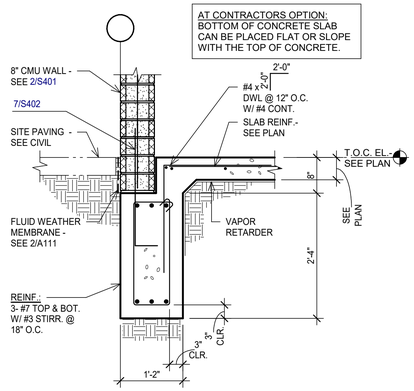


1 TYPICAL PERIMETER GRADE BEAM DETAIL
NO SCALE

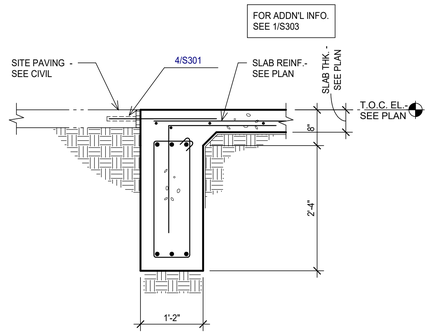


2 TYPICAL GRADE BEAM AT DOOR DETAIL
NO SCALE

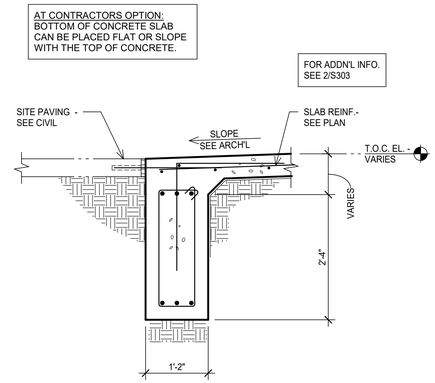


3 TYPICAL GRADE BEAM AT PORCH DETAIL
NO SCALE

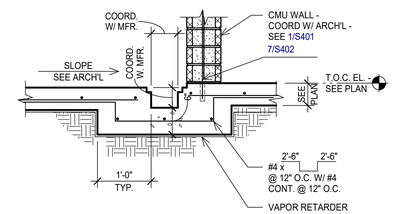


4 TYPICAL TRENCH DETAIL
NO SCALE

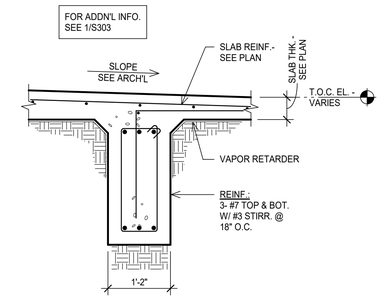


5 TYPICAL INTERIOR GRADE BEAM DETAIL
NO SCALE

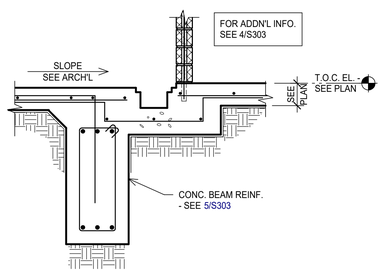


6 TYPICAL TRENCH DETAIL
SCALE: 3/4" = 1'-0"

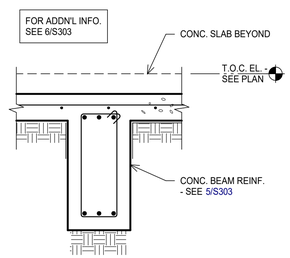


7 TYPICAL TRENCH DETAIL
SCALE: 3/4" = 1'-0"

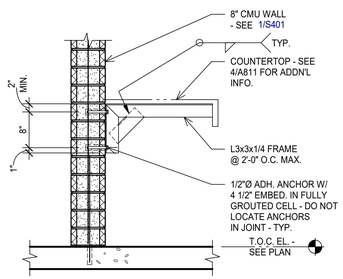


8 TYPICAL COUNTERTOP SUPPORT DETAIL
NO SCALE

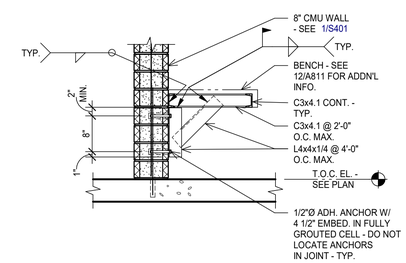


9 TYPICAL BENCH SUPPORT DETAIL
SCALE: 3/4" = 1'-0"

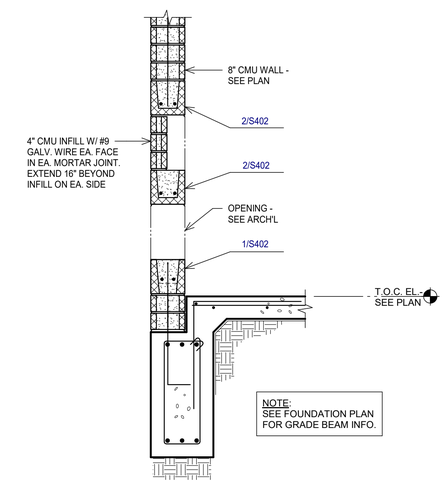


10 SECTION
SCALE: 3/4" = 1'-0"

TEXAS PARKS & WILDLIFE

# EISENHOWER STATE PARK

RESTROOM REPLACEMENT
PROJECT NUMBER: 1210136

DATE: 01/22/2021
DESIGNED BY: DW
DRAWN BY: CM
REVIEWED BY: DW
REVISED:
REVISED:
REVISED:

SHEET TITLE
CONCRETE DETAILS

SHEET NUMBER
S303

01/22/2021

shaping the built environment
JQ Infrastructure
JQ INFRASTRUCTURE, LLC
3017 WEST 7TH STREET, SUITE 400
817.546.7200
FORT WORTH, TEXAS 76107
JQIENG.COM
TBPE FIRM F-7986
PROJECT NO: 4200137
STATE OF TEXAS
DAVID A. WALKER
132006
LICENSED
PROFESSIONAL ENGINEER

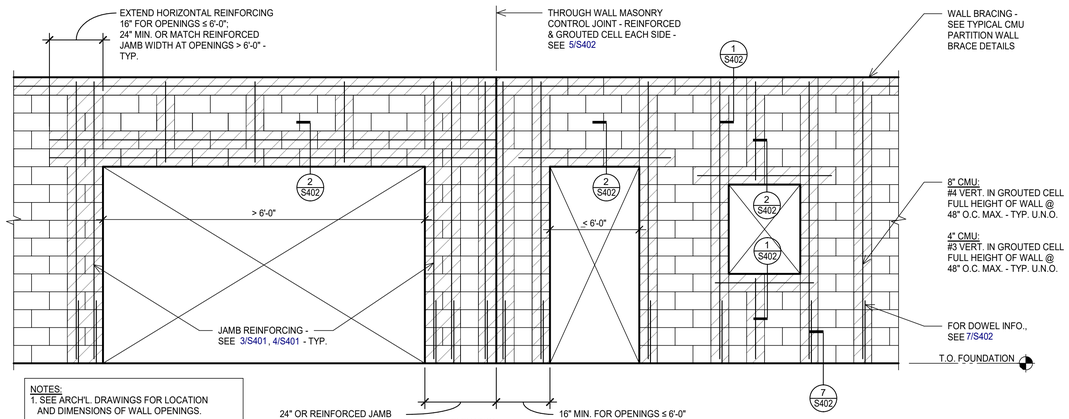


NOTES:
1. SEE ARCH'L. DRAWINGS FOR LOCATION AND DIMENSIONS OF WALL OPENINGS.
2. FOR LAP SPLICE LENGTHS SEE 8/S402

## 1 TYPICAL NON-LOAD BEARING CMU PARTITION WALL REINFORCING DETAIL
NO SCALE

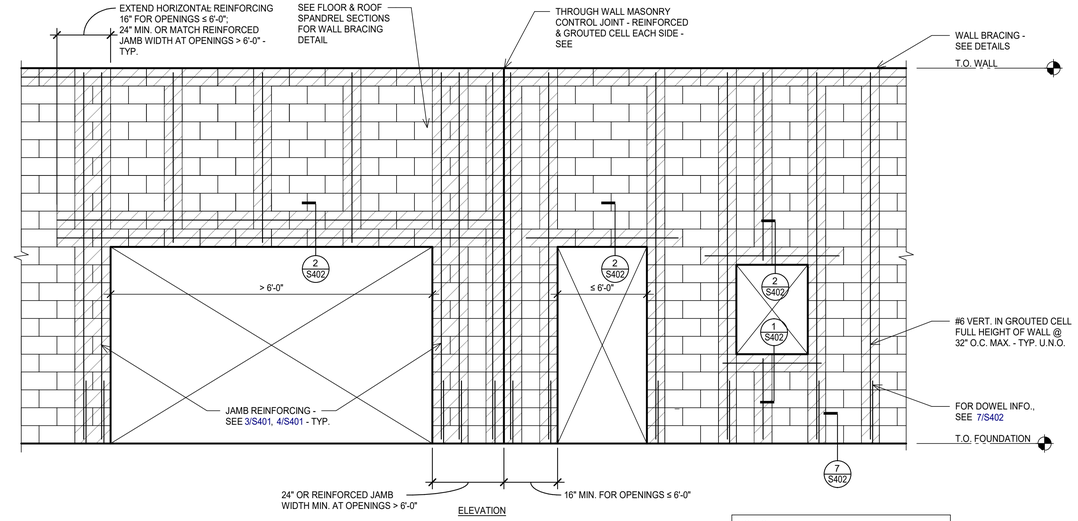


NOTES:
1. SEE ARCH'L. DRAWINGS FOR LOCATION AND DIMENSIONS OF WALL OPENINGS.
2. FOR LAP SPLICE LENGTHS SEE 8/S402.

## 2 TYPICAL LOAD BEARING CMU WALL REINFORCING DETAIL
NO SCALE

NOTES

1. a. FOR OPENING AT EXTERIOR WALL, EXTEND JAMB REINFORCING TO TOP OF WALL.
   b. FOR OPENING AT INTERIOR WALL ≤ 6'-0", TERMINATE JAMB REINFORCING AT TOP OF LINTEL.
2. FOR TYPE 2 OPENINGS, LINTEL SHALL SPAN ACROSS BOTH OPENINGS. INTERMEDIATE CMU WALL BETWEEN OPENINGS SHALL BE EQUIVALENT OF COMBINED JAMB REINFORCING FROM EACH OPENING..
3. FOR REINFORCING DETAIL AT JAMB CONDITIONS SEE 4/S402

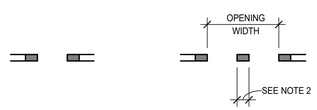


TYPE-1 OPENING  TYPE-2 OPENING

PLAN
NO SCALE

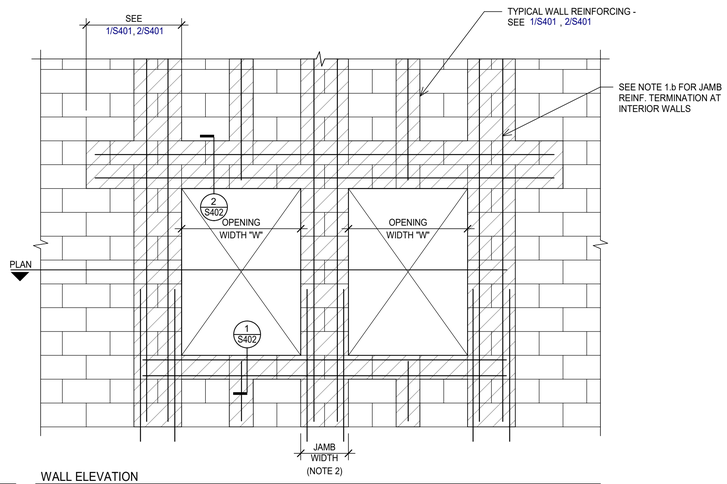


WALL ELEVATION
NO SCALE

### JAMB WIDTH & REINFORCING SCHEDULE

| WALL HEIGHT BETWEEN SUPPORTS * | CLEAR OPENING SIZE (W) | | | | |
|---|---|---|---|---|---|
| | < 8'-0" | <10'-0" | <12'-0" | <14'-0" | <16'-8" |
| ≤10'-0" | 8" / 2-#5 | 8" / 2-#5 | 8" / 2-#5 | 8" / 2-#5 | 16" / 4-#6 |
| ≤12'-0" | 8" / 2-#5 | 8" / 2-#5 | 8" / 2-#6 | 16" / 4-#6 | 16" / 4-#6 |
| ≤14'-0" | 8" / 2-#6 | 8" / 2-#7 | 16" / 4-#5 | 16" / 4-#6 | 24" / 6-#6 |
| ≤16'-0" | 16" / 4-#6 | 16" / 4-#6 | 16" / 4-#6 | 16" / 4-#7 | 24" / 6-#7 |
| ≤18'-0" | 16" / 4-#6 | 16" / 4-#6 | 24" / 6-#6 | 24" / 6-#7 | 32" / 8-#7 |

* SUPPORTS ARE DEFINED AS FLOORS, ROOFS, GIRTS, ETC. THAT ARE CONNECTED TO THE WALL WHICH BRACE THE WALL OUT OF PLANE.

## 3 CMU WALL JAMB REINFORCING DETAIL
NO SCALE

NOTES

1. a. FOR OPENING AT EXTERIOR WALL, EXTEND JAMB REINFORCING TO TOP OF WALL.
   b. FOR OPENING AT INTERIOR WALL ≤ 6'-0", TERMINATE JAMB REINFORCING AT TOP OF LINTEL.
2. FOR REINFORCING DETAIL AT JAMB CONDITIONS SEE 4/S402

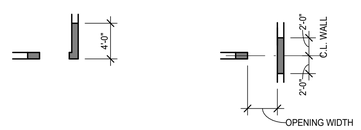


TYPE-3 OPENING  TYPE-4 OPENING

PLAN
NO SCALE

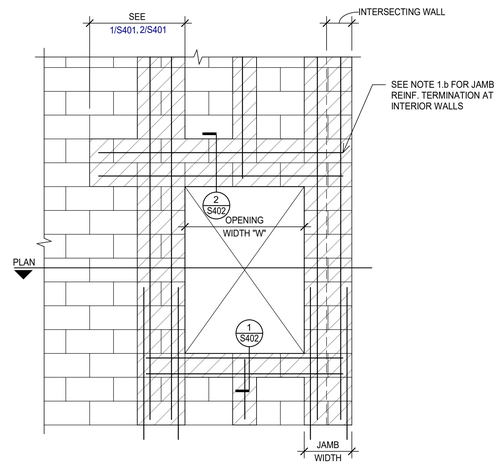


WALL ELEVATION
NO SCALE

### JAMB WIDTH & REINFORCING SCHEDULE

| WALL HEIGHT BETWEEN SUPPORTS * | CLEAR OPENING SIZE (W) | | | | |
|---|---|---|---|---|---|
| | < 8'-0" | <10'-0" | <12'-0" | <14'-0" | <16'-8" |
| ≤10'-0" | 8" / 2-#5 | 8" / 2-#5 | 8" / 2-#5 | 8" / 2-#5 | 16" / 4-#6 |
| ≤12'-0" | 8" / 2-#5 | 8" / 2-#5 | 8" / 2-#6 | 16" / 4-#6 | 16" / 4-#6 |
| ≤14'-0" | 8" / 2-#6 | 8" / 2-#7 | 16" / 4-#5 | 16" / 4-#6 | 24" / 6-#6 |
| ≤16'-0" | 16" / 2-#7 | 16" / 4-#6 | 16" / 4-#6 | 16" / 4-#7 | 24" / 6-#7 |
| ≤18'-0" | 16" / 2-#7 | 16" / 4-#6 | 24" / 6-#6 | 24" / 6-#7 | 32" / 8-#7 |

* SUPPORTS ARE DEFINED AS FLOORS, ROOFS, GIRTS, ETC. THAT ARE CONNECTED TO THE WALL WHICH BRACE THE WALL OUT OF PLANE.

## 4 CMU WALL JAMB REINFORCING DETAIL - CORNER & TEE-CONDITIONS
NO SCALE

TEXAS PARKS & WILDLIFE

# EISENHOWER STATE PARK
**RESTROOM REPLACEMENT**
PROJECT NUMBER: 1210136

DATE: 01/22/2021
DESIGNED BY: DW
DRAWN BY: CM
REVIEWED BY: DW
REVISED:
REVISED:
REVISED:

**SHEET TITLE**
TYPICAL MASONRY SECTIONS & DETAILS

SHEET NUMBER
**S401**

01/22/2021

shaping the built environment
JQ Infrastructure
JQ INFRASTRUCTURE, LLC
3017 WEST 7TH STREET, SUITE 400
817.546.7200
FORT WORTH, TEXAS 76107
JQIENG.COM
TBPE FIRM F-7986
PROJECT NO: 4200137
STATE OF TEXAS
DAVID A. WALKER
132006
LICENSED
PROFESSIONAL ENGINEER

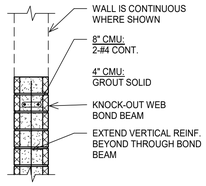


## 1 TYPICAL CMU BOND BEAM DETAIL
NO SCALE

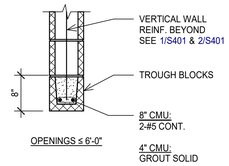


NOTES:

1. LINTELS SHALL REMAIN SHORED UNTIL MASONRY CONSTRUCTION ABOVE HAS CURED FOR A MINIMUM OF 14 DAYS.
2. SEE ARCHITECTURAL DRAWINGS FOR OPENING SIZE AND LOCATION.
3. VERTICAL CONTROL JOINTS SHALL NOT CROSS LINTEL REINFORCING.

## 2 TYPICAL CMU LINTEL DETAIL
NO SCALE

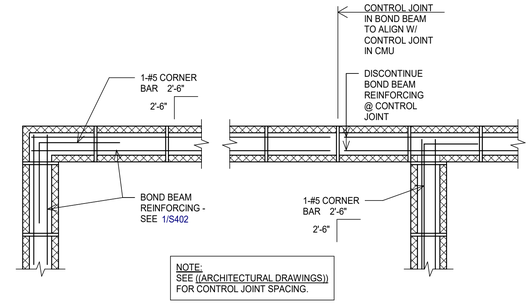


## 3 TYPICAL CORNER BARS AT BOND BEAMS DETAIL
NO SCALE

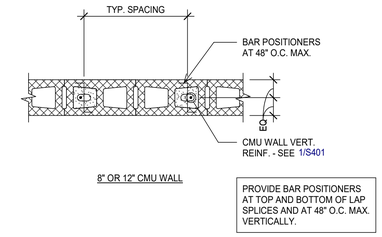


## 4 TYPICAL CMU BAR PLACEMENT DETAIL
NO SCALE

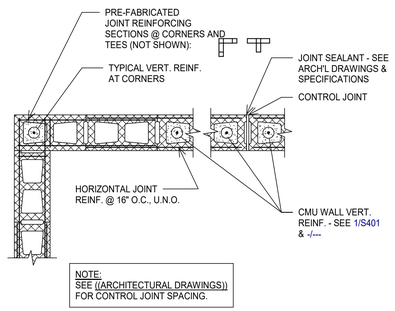


PLAN

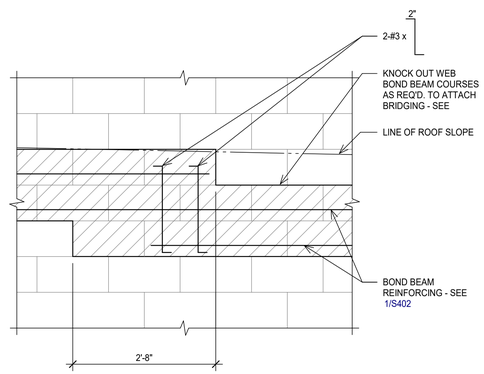


ELEVATION

## 5 TYPICAL CMU BAR PLACEMENT DETAIL
NO SCALE

## 6 TYPICAL STEP IN BOND BEAM DETAIL
NO SCALE

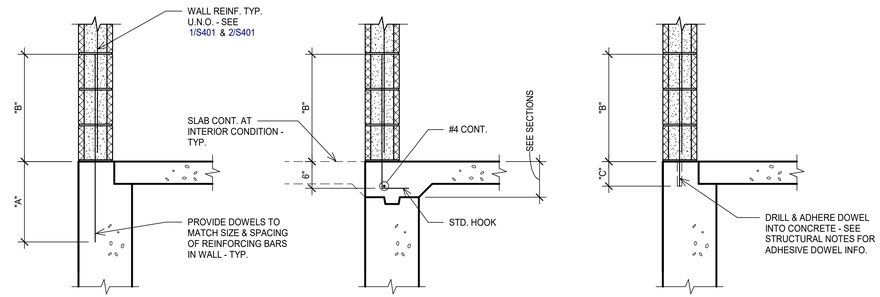


NOTES:

1. AT WALLS WITH DOUBLE REINFORCING, PROVIDE SINGLE DOWEL AT SIZE AND SPACING OF SCHEDULED WALL REINFORCING. CENTER DOWEL ON WALL, U.N.O.
2. MASONRY DOWELS SHALL BE TIED IN OR DRILLED AND ADHERED. MASONRY DOWELS SHALL NOT BE "STABBED" IN.
3. HOLES FOR MASONRY DOWELS MUST BE CLEANED WITH A WIRE BRUSH AND COMPRESSED AIR. FOLLOW MANUFACTURER'S INSTALLATION INSTRUCTIONS.

| DOWEL SIZE | DIMENSIONS | | |
|---|---|---|---|
| | "A" | "B" | "C" |
| #3 | 1'-6" | 2'-6" | 3 1/2" |
| #4 | 1'-6" | 2'-6" | 3 1/2" |
| #5 | 1'-6" | 3'-2" | 7" |
| #6 | 2'-0" | 3'-9" | 8 1/2" |
| #7 | 2'-6" | 4'-5" | 10" |

## 7 TYPICAL MASONRY WALL DOWEL DETAIL
SCALE: 3/4" = 1'-0"

| CMU WALL LAP SPLICE SCHEDULE | | |
|---|---|---|
| BAR SIZE | LAP LENGTH | |
| | BOND BEAMS | VERTICAL REINF. |
| #4 | 1'-8" | 2'-6" |
| #5 | 2'-1" | 3'-2" |
| #6 | 2'-6" | 3'-9" |
| #7 | 2'-11" | 4'-5" |

NOTES:

1. SPLICES FOR VERTICAL REINF. SHALL BE STAGGERED IN ADJACENT CELLS SO THAT NO MORE THAN 1/2 OF ALL BARS ARE SPLICED AT THE SAME LOCATION.
2. DO NOT SPLICE BARS IN LINTELS.

## 8 CMU WALL LAP SPLICE SCHEDULE
NO SCALE

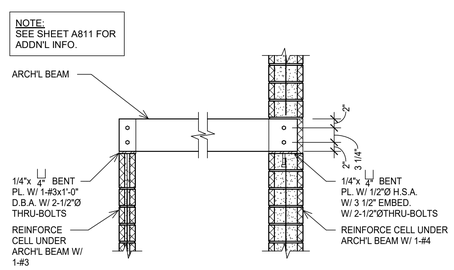


## 9 TYPICAL ARCH'L BEAM SUPPORT DETAIL
NO SCALE

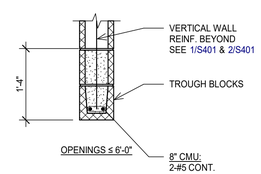


NOTES:

1. LINTELS SHALL REMAIN SHORED UNTIL MASONRY CONSTRUCTION ABOVE HAS CURED FOR A MINIMUM OF 14 DAYS.
2. SEE ARCHITECTURAL DRAWINGS FOR OPENING SIZE AND LOCATION.
3. VERTICAL CONTROL JOINTS SHALL NOT CROSS LINTEL REINFORCING.

## 10 TYPICAL CMU LINTEL DETAIL
NO SCALE

TEXAS PARKS & WILDLIFE

# EISENHOWER STATE PARK
RESTROOM REPLACEMENT
PROJECT NUMBER: 1210136

DATE: 01/22/2021
DESIGNED BY: DW
DRAWN BY: CM
REVIEWED BY: DW
REVISED:
REVISED:
REVISED:

SHEET TITLE
TYPICAL MASONRY SECTIONS & DETAILS

SHEET NUMBER
S402

01/22/2021

shaping the built environment
JQ Infrastructure
JQ INFRASTRUCTURE, LLC
3017 WEST 7TH STREET, SUITE 400
817.546.7200
FORT WORTH, TEXAS 76107
JQENG.COM
TBPE FIRM F-7986
PROJECT NO: 4200137
STATE OF TEXAS
DAVID A. WALKER
132006
LICENSED
PROFESSIONAL ENGINEER

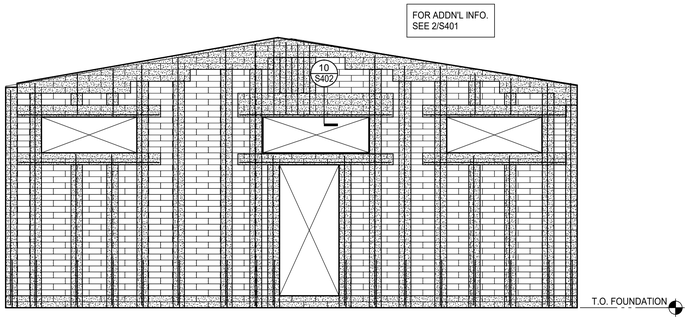


NOTES:
1. SEE ARCH'L DRAWINGS FOR LOCATION AND DIMENSIONS OF WALL OPENINGS.

1 WEST ELEVATION - MENS
SCALE: 1/4" = 1'-0"

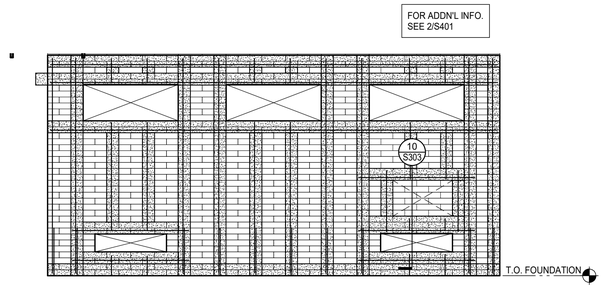


NOTES:
1. SEE ARCH'L DRAWINGS FOR LOCATION AND DIMENSIONS OF WALL OPENINGS.

2 SOUTH ELEVATION - MENS
SCALE: 1/4" = 1'-0"

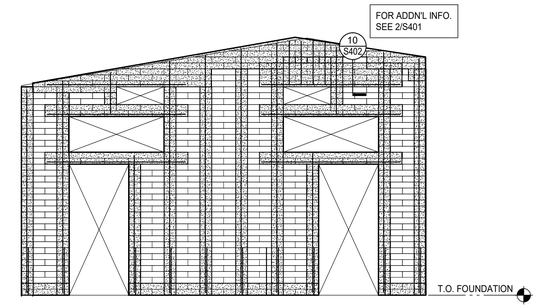


NOTES:
1. SEE ARCH'L DRAWINGS FOR LOCATION AND DIMENSIONS OF WALL OPENINGS.

3 WEST ELEVATON - WOMENS
SCALE: 1/4" = 1'-0"

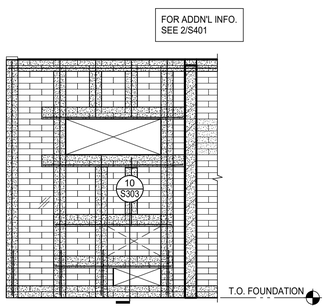


NOTES:
1. SEE ARCH'L DRAWINGS FOR LOCATION AND DIMENSIONS OF WALL OPENINGS.

4 SOUTH ELEVATION - WOMENS
SCALE: 1/4" = 1'-0"

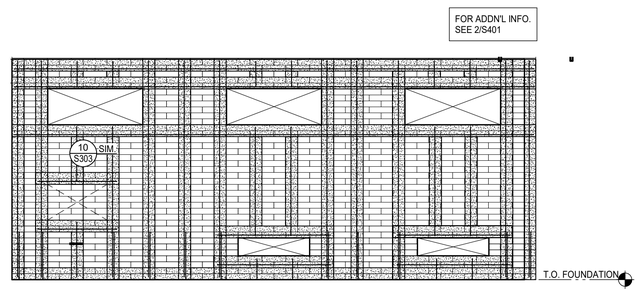


NOTES:
1. SEE ARCH'L DRAWINGS FOR LOCATION AND DIMENSIONS OF WALL OPENINGS.

5 SOUTH ELEVATION - WOMENS
SCALE: 1/4" = 1'-0"

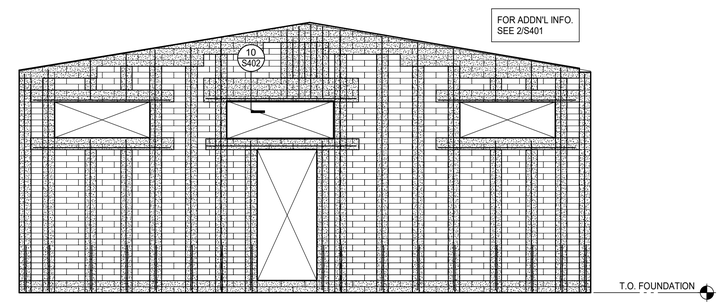


NOTES:
1. SEE ARCH'L DRAWINGS FOR LOCATION AND DIMENSIONS OF WALL OPENINGS.

6 EAST ELEVATION - WOMENS
SCALE: 1/4" = 1'-0"

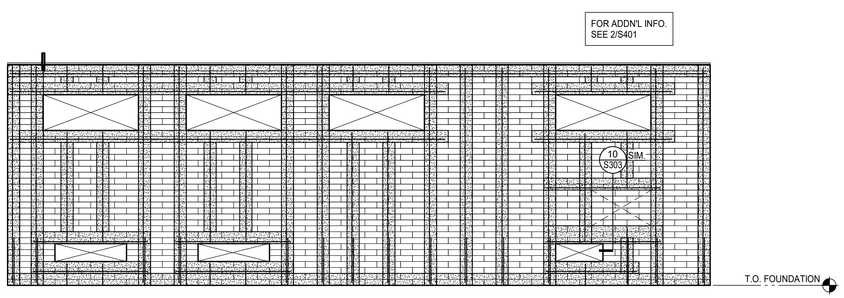


NOTES:
1. SEE ARCH'L DRAWINGS FOR LOCATION AND DIMENSIONS OF WALL OPENINGS.

7 NORTH ELEVATION - WOMENS
SCALE: 1/4" = 1'-0"

TEXAS PARKS & WILDLIFE

# EISENHOWER STATE PARK

**RESTROOM REPLACEMENT**

PROJECT NUMBER: 1210136

DATE: 01/22/2021
DESIGNED BY: DW
DRAWN BY: CM
REVIEWED BY: DW
REVISED:
REVISED:
REVISED:

**SHEET TITLE**
MASONRY ELEVATION

SHEET NUMBER
**S410**

01/22/2021

shaping the built environment

JQ INFRASTRUCTURE, LLC
3017 WEST 7TH STREET, SUITE 400
817.546.7200
FORT WORTH, TEXAS 76107
JQIENG.COM
TBPE FIRM F-7986
PROJECT NO: 4200137

STATE OF TEXAS
DAVID A. WALKER
132006
LICENSED
PROFESSIONAL ENGINEER

## NAILING SCHEDULE

| CONNECTION | NAILING |
|---|---|
| 1. FLOOR JOIST TO BAND JOIST, FACE NAIL | 3-16d OR 3-3 1/2"x.162 |
| 2. FLOOR JOIST TO SILL PLATE OR GIRDER, TOE NAIL | 3-8d |
| 3. BRIDGING TO JOISTS, TOE NAIL OR END NAIL EACH END | 2-8d |
| 4. SILL PLATE TO BAND JOIST OR BLOCKING, FACE NAIL | 16d AT 16" O.C.<br>OR 3 1/2"x.162 @ 16" O.C. |
| 5. TOP PLATE TO STUD, END NAIL | 2-16d OR 3-3"x.131 |
| 6. STUD TO SILL PLATE | 4-8d TOE NAIL OR<br>2-16d EACH END |
| 7. DOUBLE STUDS, FACE NAIL | 16d AT 24" O.C. MAX.<br>OR 3"x.131 @ 8" O.C. MAX. |
| 8. DOUBLE TOP PLATES, FACE NAIL | 16d AT 16" O.C. OR 3"x.131 @ 12" O.C. |
| 9. TOP PLATES AND INTERSECTIONS, FACE NAIL | 2-16d OR 3-3"x.131 |
| 10. TOP PLATES AND LAPS, FACE NAIL | 8-16d OR 12-3"x.131 |
| 11. CONTINUOUS HEADER-TWO PIECES | 16d AT 16" O.C. OR 3"x.131 @ 12" O.C.<br>ALONG EACH EDGE |
| 12. CEILING JOISTS TO PLATE, TOE NAIL | 3-8d |
| 13. CEILING JOISTS, LAPS OVER PARTITIONS, FACE NAIL | 3-16d OR 3-3 1/2"x.162 |
| 14. CEILING JOISTS TO PARALLEL RAFTERS, FACE NAIL | 3-16d OR 3-3 1/2"x.162 |
| 15. RAFTER TO PLATE, TOE NAIL | 3-8d |
| 16. 3/4" LET-IN BRACE TO EACH STUD AND PLATES, FACE NAIL | 2-8d |
| 17. BUILT-UP CORNER STUDS | 16d AT 24" O.C. OR 3"x.131 @ 16" O.C. |
| 18. BUILT-UP GIRDER AND BEAMS, THREE MEMBERS | 20d AT 32" O.C. AT TOP<br>AND BOTTOM (STAGGERED)<br>2-20d AT ENDS |

NOTES:

1.PROVIDE NAILING CONNECTIONS INDICATED IN SCHEDULE UNLESS DETAILED OR NOTED OTHERWISE.

1 TYPICAL EXTERIOR WALL ELEVATION LATERAL BRACING
NO SCALE

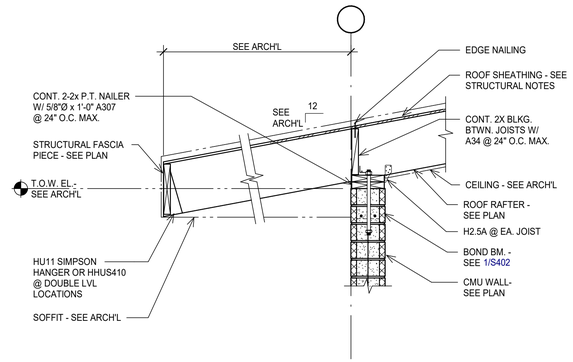


2 SECTION
NO SCALE

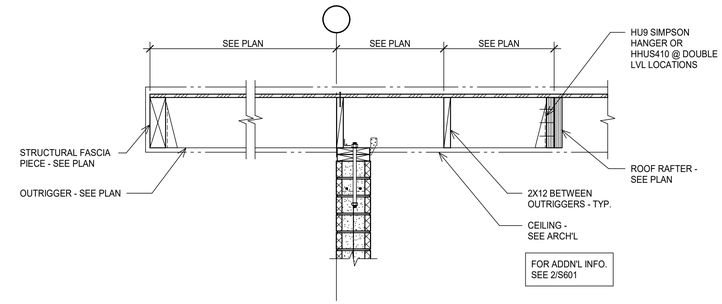


3 SECTION
NO SCALE

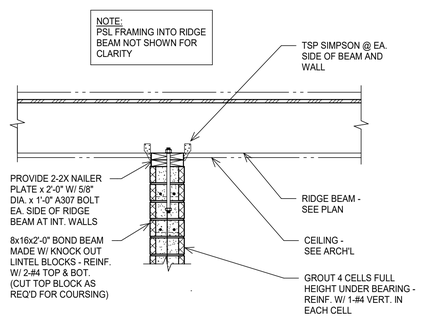


4 SECTION
NO SCALE

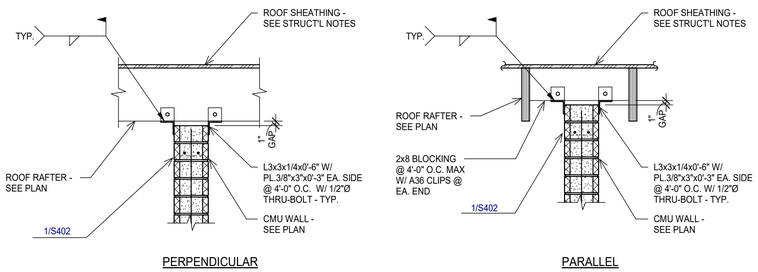


5 TYPICAL PARTITION WALL SUPPORT DETAIL
NO SCALE

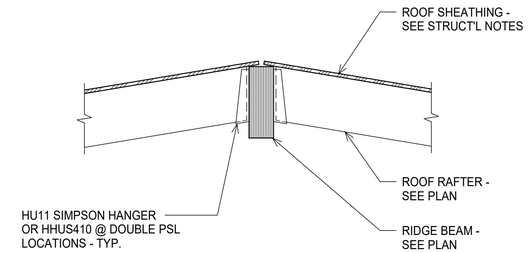


6 SECTION
NO SCALE

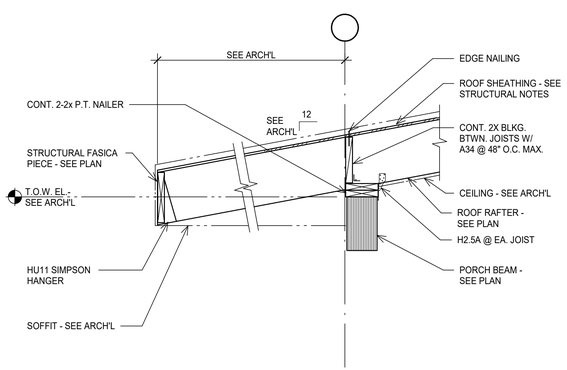


7 SECTION
SCALE: 3/4" = 1'-0"

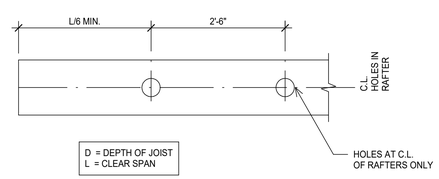


NOTES:

1. HOLE CUTS ALLOWED IN RAFTERS ONLY - NOTIFY ENGINEER PRIOR TO CUTTING BEAMS - TYP. U.N.O.

8 TYPICAL HOLES IN WOOD DETAIL
NO SCALE

TEXAS PARKS & WILDLIFE

# EISENHOWER STATE PARK

**RESTROOM REPLACEMENT**

PROJECT NUMBER: 1210136

DATE: 01/22/2021
DESIGNED BY: DW
DRAWN BY: CM
REVIEWED BY: DW
REVISED:
REVISED:
REVISED:

**SHEET TITLE**
TYPICAL WOOD DETAILS

SHEET NUMBER
**S601**

01/22/2021

shaping the built environment
JQ Infrastructure
JQ INFRASTRUCTURE, LLC
3017 WEST 7TH STREET, SUITE 400
817.546.7200
FORT WORTH, TEXAS 76107
JQENG.COM
TBPE FIRM F-7986
PROJECT NO: 42D0137
STATE OF TEXAS
DAVID A. WALKER
132006
LICENSED
PROFESSIONAL ENGINEER

# MECHANICAL ABBREVIATIONS, SYMBOLS AND NOTES (THIS IS A STANDARD LEGEND, NOT ALL SYMBOLS MAY BE APPLICABLE TO PROJECT)

## ABBREVIATIONS

| | | | |
|---|---|---|---|
| A | COMPRESSED AIR | LG | LENGTH |
| ABV | ABOVE | LT. | LIGHT |
| A/C | AIR CONDITIONING | MAN | MANUAL |
| AD | ACCESS DOOR OR PANEL | MAX | MAXIMUM |
| A. DR | AREA DRAIN | MECH | MECHANICAL |
| AFF | ABOVE FINISH FLOOR | MIN | MINIMUM, MINUTE |
| AFG | ABOVE FINISHED GRADE | MVD | MANUAL VOLUME DAMPER |
| AHU | AIR HANDLING UNIT | NIC | NOT IN CONTRACT |
| AI | ANALOG INPUT | NC | NORMALLY CLOSED, NOISE CRITERIA |
| AMP | AMPERE | NO | NORMALLY OPEN, NUMBER |
| BAS | BUILDING AUTOMATION SYSTEM | NTS | NOT TO SCALE |
| BCV | BALL CHECK VALVE | OA | OUTSIDE AIR |
| BFF | BELOW FINISHED FLOOR | OBD | OPPOSED BLADE DAMPER |
| B/C | BELOW CEILING | OC | ON CENTER |
| B/G | BELOW GRADE | OD | OUTSIDE DIAMETER |
| BLDG | BUILDING | O.F.C.I. | OWNER FURNISHED, CONTRACTOR INSTALLED |
| BOD | BOTTOM OF DUCT | O.F.O.I. | OWNER FURNISHED, OWNER INSTALLED |
| BOP | BOTTOM OF PIPE | PNL | PANEL |
| BOS | BOTTOM OF STRUCTURE | P/A | PRE-ACTION |
| BR | BRANCH | PC | PLUG COCK |
| BTUH | BRITISH THERMAL UNITS PER HOUR | PE | PNEUMATIC ELECTRIC SWITCH |
| BWV | BACK WATER VALVE | PH | PHASE |
| CD | CONDENSATE DRAIN | PIV | POST INDICATOR VALVE |
| CU | CONDENSING UNIT | PO | PLUGGED OUTLET |
| CFH | CUBIC FEET PER HOUR | P | PRESSURE |
| CFM | CUBIC FEET PER MINUTE | PRV | PRESSURE REDUCING VALVE |
| CFS | CUBIC FEET PER SECOND | P.S. | PRESSURE SWITCH |
| CI | CAST IRON | PSI | POUNDS PER SQUARE INCH |
| CL | CENTERLINE | PTRV | PRESSURE-TEMPERATURE RELIEF VALVE |
| CLG | CEILING | PRV | PRESSURE RELIEF VALVE |
| CO | CLEANOUT | PVC | POLYVINYL CHLORIDE |
| CRU | COMPUTER ROOM UNIT | PC | PULL CHAIN |
| CWS | COOLING WATER SUPPLY | PWR | POWER |
| CWR | COOLING WATER RETURN | R. | RELAY |
| D | DRAIN | RA | RETURN AIR |
| DB | DRY BULB | RD | ROOF DRAIN |
| DI | DIGITAL INPUT | REC. | RECESSED |
| DIA. ⌀ | DIAMETER | RED | REDUCER |
| DN | DOWN | RPBFP | REDUCED PRESSURE BACKFLOW PREVENTER |
| DO | DIGITAL OUTPUT | BFP | BACKFLOW PREVENTER |
| DR | DRAIN | RTU | ROOFTOP UNIT |
| DS | DOWN SPOUT | SS | SANITARY SEWER |
| DX | DIRECT EXPANSION | SA | SUPPLY AIR |
| DWG | DRAWING | SAN | SANITARY |
| EA | EXHAUST AIR | SD | SMOKE DAMPER |
| EAT | ENTERING AIR TEMPERATURE | S.E. | SERVICE ENTRANCE |
| EDH | ELECTRIC DUCT HEATER | SF | SUPPLY FAN, SQUARE FEET |
| EF | EXHAUST FAN | SENS | SENSIBLE |
| EFF | EFFICIENCY | SH | SUPPLY HOOD |
| ELEC | ELECTRICAL | SPEC. | SPECIFICATION |
| ELEV | ELEVATION | SPRK | SPRINKLER |
| EP | EXPLOSION PROOF | SP | STATIC PRESSURE |
| ERV | ENERGY RECOVERY VENTILATOR | S.S. | START STOP STATION |
| EUH | ELECTRIC UNIT HEATER | ST | STACK |
| EXIST, EX | EXISTING | ST. STL | STAINLESS STEEL |
| F | FAHRENHEIT | S.V. | SOLENOID VALVE |
| FCU | FAN COIL UNIT | TEMP | TEMPERATURE |
| FD | FIRE DAMPER or FLOOR DRAIN | TSTAT | THERMOSTAT |
| FH | FIRE HYDRANT | TSP | TOTAL STATIC PRESSURE |
| FLEX | FLEXIBLE | TYP | TYPICAL |
| FP | FIRE PROOFING | UH | UNIT HEATER |
| FPB | FAN POWERED BOX | U.F. | UNDERFLOOR |
| FPI | FINS PER INCH | U.G. | UNDERGROUND |
| FPF | FINS PER FOOT | UN | UNION |
| FPM | FEET PER MINUTE | V | VENT, VOLT |
| FPS | FEET PER SECOND | VAV | VARIABLE AIR VOLUME TERMINAL UNIT |
| FS | FLOW SWITCH | VEL | VELOCITY |
| FS | FLOOR SINK | VOL. | VOLUME |
| FT | FOOT, FEET | V.P. | VAPORPROOF |
| G | GAS, LOW PRESSURE | VTR | VENT THRU ROOF |
| GAL | GALLON | W | WATT OR WIRE |
| GALV | GALVANIZED | W/ | WITH |
| GC | GENERAL CONTRACTOR | WB | WET BULB |
| GCO | GRADE CLEAN OUT | WCO | WALL CLEAN OUT |
| GEN. | GENERATOR | WG | WATER GAUGE |
| GPM | GALLONS PER MINUTE | WSHP | WATER SOURCE HEAT PUMP |
| GPH | GALLONS PER HOUR | WP | WEATHERPROOF |
| GV | GLOBE VALVE | | |
| HD | HUB DRAIN | | |
| HOA | HANDS-OFF AUTOMATIC SWITCH | | |
| HH | HAND HOLE | | |
| HP | HORSEPOWER | | |
| HVAC | HEATING, VENTILATING & AIR CONDITIONING | | |
| HWS | HOT WATER SUPPLY | | |
| HWR | HOT WATER RETURN | | |
| HZ | HERTZ | | |
| IE | INVERT ELEVATION | | |
| ID | INSIDE DIAMETER | | |
| IN | INCH | | |
| INV | INVERT | | |
| KW | KILOWATTS (1000 WATTS) | | |
| LAT | LEAVING AIR TEMPERATURE | | |
| LF | LINEAR FEET | | |

## LEGEND

| | |
|---|---|
| — PCHS — | PRIMARY CHILLED WATER SUPPLY |
| — PCHR — | PRIMARY CHILLED WATER RETURN |
| — CHS — | CHILLED WATER SUPPLY |
| — CHR — | CHILLED WATER RETURN |
| — PHWS — | PRIMARY HEATING WATER SUPPLY |
| — PHWR — | PRIMARY HEATING WATER RETURN |
| — HWS — | HEATING WATER SUPPLY |
| — HWR — | HEATING WATER RETURN |
| — CWS — | CONDENSER WATER |
| — CWR — | CONDENSER WATER |
| — RS — | REFRIGERANT SUCTION |
| — RL — | REFRIGERANT LIQUID |
| — AD — | AUXILIARY DRAIN LINE |
| — CD — | CONDENSATE DRAIN LINE |
| — E — | EXPANSION LINE |
| — AR — | ATMOSPHERIC RELIEF LINE |
| — G — | NATURAL GAS LINE |
| | FLOW IN DIRECTION OF ARROW |
| | SLOPE DOWN IN DIRECTION OF ARROW |
| | STRAINER WITH BLOWDOWN VALVE |
| | GATE VALVE |
| | BUTTERFLY VALVE |
| | BALL VALVE |
| | GLOBE VALVE |
| | PLUG VALVE |
| | CHECK VALVE |
| | 2-WAY CONTROL VALVE |
| | 3-WAY CONTROL VALVE |
| | PRESSURE REDUCING VALVE |
| | AUTOMATIC AIR VENT |
| | PRESSURE INDEPENDENT BALANCE VALVE |
| | BALANCE VALVE |
| | DIFFERENTIAL PRESSURE REDUCING REGULATOR |
| | MULTI-PURPOSE VALVE (SHUTOFF, BALANCING, CHECK) |
| | FLOW MEASURING & BALANCING VALVE |
| | RISE AND DROP IN PIPING |
| | BLIND FLANGE |
| | TURBINE FLOW METER |
| M | ELECTROMAGNETIC FLOW METER |
| | ULTRASONIC FLOW METER |
| PI P | PRESSURE GAUGE WITH GAUGE COCK |
| TI T | TEMPERATURE GAUGE WITH GAUGE COCK |
| PS | PRESSURE SENSOR |
| TE | TEMPERATURE ELEMENT |
| FE | FLOW ELEMENT |
| | THERMOMETER |
| | THERMOWELL |
| | PETE'S PLUG |

| | |
|---|---|
| X | ANCHOR POINT |
| | GUIDE OR RACK POINT |
| | BELLOWS TYPE EXPANSION JOINT |
| | FLEX CONNECTOR |
| C.R. | CONCENTRIC REDUCER |
| E.R. | ECCENTRIC REDUCER |
| | SYSTEM FILL CONNECTION |
| | GAUGE COCK |
| | UNION |
| | CAP |
| | DISCONNECTION TO EXISTING SYSTEM |
| | CONNECTION TO EXISTING SYSTEM |
| C | CO SENSOR |
| N | NITROGEN DIOXIDE |
| H | HUMIDITY SENSOR |
| T | THERMOSTAT |
| TS | TEMPERATURE SENSOR |
| S | PLENUM RATED SMOKE DETECTOR |
| P | PRESSURE SENSOR |
| R | RISE IN DUCT |
| D | DROP IN DUCT |
| | SUPPLY DUCT IN VERTICAL |
| | RETURN OR EXHAUST IN VERTICAL |
| | MANUAL DAMPER |
| M | MOTORIZED DAMPER |
| FD | FIRE DAMPER |
| FSD | FIRE/SMOKE DAMPER |
| SD | SMOKE DAMPER |
| SD | DUCT MOUNTED SMOKE DAMPER |
| | TURNING VANES |
| | SUPPLY AIR FLOW ARROW |
| | RETURN/EXHAUST AIR FLOW ARROW |
| | SUPPLY DIFFUSER, SIZE AS DESIGNATED ON PLAN |
| | RETURN OR EXHAUST GRILLE, SIZE AND TYPE DESIGNATED ON PLAN |
| | SIDEWALL SUPPLY GRILLE |
| | SIDEWALL RETURN/EXHAUST GRILLE |
| | FLEXIBLE DUCTWORK, SIZE AS DESIGNATED ON PLAN |

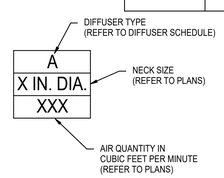


DIFFUSER CALLOUT KEY

## GENERAL NOTES

GENERAL CONDITONS:

1. THE GENERAL CONTRACTOR SHALL ACCUMULATE ALL RELATED INFORMATION FROM THEIR SUB-CONTRACTORS AND SUPPLIERS THAT WILL ALLOW THE GENERAL CONTRACTOR TO INCORPORATE ALL ELEMENTS AND WORK OF ALL TRADES INTO A FULLY COORDINATED AUTO-CAD DRAWING SECTION THROUGH AREAS OF DENSE MECHANICAL, ELECTRICAL, CABLE TRAYS, PLUMBING, SECURITY, PA SYSTEM AND FIRE PROTECTION SYSTEMS PRIOR TO THE FABRICATION OR INSTALLATION OF ANY WORK SO AS TO CONFIRM PROPER ACCESS TO ALL ELEMENTS FOR PROPER OPERATION AND MAINTENANCE SERVICE SPACE.
2. ALL WORK BY CONTRACTOR SHALL CONFORM TO ALL CODES AS LISTED ON THE PROJECT COVER SHEET.
3. MATERIALS AND EQUIPMENT FURNISHED UNDER THE CONTRACT SHALL BE NEW AND SHALL BEAR THE U.L. LABEL WHERE APPLICABLE, UNLESS NOTED OTHERWISE. ALL WORK SHALL BE GUARANTEED AGAINST DEFECTIVE MATERIALS AND WORKMANSHIP FOR A PERIOD OF NOT LESS THAN ONE YEAR AFTER COMPLETION AND ACCEPTANCE BY THE OWNER.
4. CONTRACTOR SHALL INSTALL SYSTEMS WITHOUT INTERFERENCE AND IN STRICT COORDINATION WITH OTHER TRADES.
5. MATERIALS AND WORKMANSHIP SHALL COMPLY WITH THE CONTRACT DOCUMENTS AND APPLICABLE CODES AND STANDARDS. IN CASE OF DIFFERENCE BETWEEN APPLICABLE CODES AND STANDARDS AND THE CONTRACT DOCUMENTS, THE CONTRACTOR SHALL PROMPTLY NOTIFY THE OWNER'S REPRESENTATIVE IN WRITING OF SUCH DIFFERENCE. SHOULD THE CONTRACTOR PERFORM ANY WORK THAT DOES NOT COMPLY WITH REQUIREMENTS OF APPLICABLE CODES AND STANDARDS THEY SHALL BEAR ALL COSTS ARISING IN CORRECTING SUCH DEFECTS.
6. PROVIDE ACCESS, INCLUDING NECESSARY ACCESS DOORS, FOR EQUIPMENT REQUIRING ADJUSTMENT OR MAINTENANCE. LOCATE ALL EQUIPMENT SUCH THAT OPERATION OR MAINTENANCE IS NOT RESTRICTED.
7. DO NOT RUN PIPING OR DUCTWORK, OR LOCATE EQUIPMENT, WITH RESPECT TO SWITCHBOARDS, PANELBOARDS, POWER PANELS, MOTOR CONTROL CENTERS OR DRY TYPE TRANSFORMERS WITHIN APPLICABLE CODE CLEARANCES OR MANUFACTURER'S RECOMMENDED SERVICE CLEARANCES, WHICHEVER IS GREATER.
8. VERIFY ALL SENSOR AND THERMOSTAT LOCATIONS WITH ARCHITECT PRIOR TO ROUGHING IN. MOUNTING HEIGHTS SHALL COMPLY WITH ACCESSIBILITY STANDARDS. ALL CONTROL WIRING FOR THERMOSTATS AND SENSORS IS TO BE INSTALLED IN RACEWAY SYSTEMS.
9. DUCT SIZES SHOWN ON PLANS ARE CLEAR AIRSTREAM DIMENSIONS.
10. PROVIDE MANUAL VOLUME DAMPER AT EACH DIFFUSER/GRILLE BRANCH TAP. PROVIDE DAMPER ADJUSTABLE THROUGH DIFFUSER/GRILLE FACE OR PROVIDE PROVISIONS FOR ADJUSTING DAMPERS IN AREAS WITH HARD CEILING.
11. REFER TO ARCHITECTURAL REFLECTED CEILING PLANS FOR EXACT LOCATIONS OF GRILLES AND DIFFUSERS.


B&H Engineers, Inc
511 E John Carpenter Fwy
Suite 250
Irving, TX 75062
www.BandHEngineers.com
Registration No. 9102


TEXAS PARKS & WILDLIFE


GSBS ARCHITECTS
7291 GLEVIEW DRIVE
FORT WORTH, TX 76180
817.589.1722
GSBSARCHITECTS.COM


STATE OF TEXAS
CHRISTOPHER D. SIMS
119237
LICENSED PROFESSIONAL ENGINEER
21-01-22

# EISENHOWER STATE PARK

**RESTROOM REPLACEMENT**

PROJECT NUMBER: 1210136

DATE: 21-01-22
DESIGNED BY: LCA
DRAWN BY: LCA
REVIEWED BY: CDS
REVISED:
REVISED:
REVISED:

**SHEET TITLE**
MECHANICAL COVER SHEET

SHEET NUMBER
**M001**

## MECHANICAL GENERAL NOTES:

1. FINAL LOCATIONS OF ALL AIR DEVICES SHALL BE COORDINATED WITH ARCHITECTURAL CEILING FINISHES.
2. ALL DUCT SIZE NOTES REFER TO CLEAR INSIDE DIMENSION OF DUCT.
3. PROVIDE VOLUME DAMPERS FOR ALL SUPPLY, RETURN, AND EXHAUST BRANCH DUCTS TO BALANCE SYSTEM.
4. THERMOSTATS ARE TO BE INSTALLED IN VANDAL RESISTANT LOCK BOXES.
5. LOUVER LOCATIONS AND SIZES ARE TO BE COORDINATED WITH EXACT DIMENSIONS SHOWN ON ARCHITECTURAL AND STRUCTURAL PLANS.
6. ALL LOUVERS ARE TO BE INSTALLED TO PREVENT LINE OF SIGHT INTO THE RESTROOM SPACES.

## NOTES BY SYMBOL: ◯

| | |
|---|---|
| 1 | LOW VENTILATION LOUVER 8 IN. AFF. WITH 2.3 SQ. FT. MINIMUM FREE AREA IN FACE OF WALL TO PROVIDE PASSIVE VENTILATION. PROVIDE WITH VINYL COATED FIBERGLASS INSECT SCREEN. |
| 2 | LOW VENTILATION LOUVER 8 IN. AFF. WITH 3.0 SQ. FT. MINIMUM FREE AREA IN FACE OF WALL TO PROVIDE PASSIVE VENTILATION. PROVIDE WITH VINYL COATED FIBERGLASS INSECT SCREEN. |
| 3 | LOW VENTILATION LOUVER 8 IN. AFF. WITH 3.2 SQ. FT. MINIMUM FREE AREA IN FACE OF WALL TO PROVIDE PASSIVE VENTILATION. PROVIDE WITH VINYL COATED FIBERGLASS INSECT SCREEN. |
| 4 | HIGH VENTILATION LOUVER 10 FT. AFF. WITH 1.5 SQ. FT. MINIMUM FREE AREA IN FACE OF WALL TO PROVIDE PASSIVE VENTILATION. PROVIDE WITH VINYL COATED FIBERGLASS INSECT SCREEN. |
| 5 | HIGH VENTILATION LOUVER 10 FT. AFF. WITH 1.6 SQ. FT. MINIMUM FREE AREA IN FACE OF WALL TO PROVIDE PASSIVE VENTILATION. PROVIDE WITH VINYL COATED FIBERGLASS INSECT SCREEN. |
| 6 | HIGH VENTILATION LOUVER 10 FT. AFF. WITH 2.0 SQ. FT. MINIMUM FREE AREA IN FACE OF WALL TO PROVIDE PASSIVE VENTILATION. PROVIDE WITH VINYL COATED FIBERGLASS INSECT SCREEN. |
| 7 | HIGH VENTILATION LOUVER 10 FT. AFF. WITH 2.15 SQ. FT. MINIMUM FREE AREA IN FACE OF WALL TO PROVIDE PASSIVE VENTILATION. PROVIDE WITH VINYL COATED FIBERGLASS INSECT SCREEN. |
| 8 | HIGH VENTILATION LOUVER 10.5 FT. AFF. WITH 2.3 SQ. FT. MINIMUM FREE AREA IN FACE OF WALL TO PROVIDE PASSIVE VENTILATION. PROVIDE WITH VINYL COATED FIBERGLASS INSECT SCREEN. |
| 9 | (1) SUSPENDED RADIANT HEATER TO SERVE RESTROOM SPACE. HEATERS ARE TO BE MOUNTED TO STRUCTURE WITH THREADED RODS AND UNITSTRUT ANGLE. |
| 10 | (1) SUSPENDED RADIANT HEATER TO SERVE SHOWER SPACE. HEATERS ARE TO BE MOUNTED TO STRUCTURE WITH THREADED RODS AND UNISTRUT ANGLE. |
| 11 | (1) SUSPENDED ELECTRIC UNIT HEATER TO SERVE PLUMBING CHASE. PROVIDE WITH INTEGRAL THERMOSTAT SET TO 45 DEG. |
| 12 | PROVIDE OPEN DUCT WITH FULL PERIMETER ANGLE AND MESH SCREEN. |
| 13 | MOUNT INLINE EXHAUST FAN IN VERTICAL DUCT. ROUTE 10 IN. ROUND EXHAUST DUCT UP THROUGH ROOF AND TERMINATE WITH GRAVITY RELIEF CAP. BASIS OF DESIGN: GREENHECK #GRSR. |
| 14 | HIGH VENTILATION LOUVER 12 FT. AFF. WITH MINIMUM OF 12.8 SQ. FT. FREE AREA. PROVIDE SHEET METAL PLENUM ON BACKSIDE OF LOUVER AND CONNECT EXHAUST DUCT TO PLENUM. |
| 15 | HIGH VENTILATION LOUVER 12 FT. AFF. WITH MINIMUM OF 12.0 SQ. FT. FREE AREA. PROVIDE SHEET METAL PLENUM ON BACKSIDE OF LOUVER AND CONNECT EXHAUST DUCT TO PLENUM. |
| 16 | REMOTE TEMPERATURE SENSOR IN VANDAL RESISTANT LOCK BOX. LOCATE CONTROLS WITHIN PLUMBING CHASE AT LOCATION SHOWN AT 4.5 FT. AFF. |
| 17 | INSTALL THERMOSTAT CONTROLS IN SERVICE CHASE AT 4.5 FT. AFF. |
| 18 | LOUVER AT 10 FT. AFF. WITH 0.5 SQ. FT. MINIMUM FREE AREA IN FACE OF WALL. |
| 19 | 4 IN. FLUE UP THROUGH ROOF. TERMINATE WITH ROOF CAP PER HEATER MANUFACTURERS INSTALLATION REQUIREMENTS. |
| 20 | 4 IN. INTAKE UP THROUGH ROOF. TERMINATE WITH ROOF CAP PER HEATER MANUFACTURERS INSTALLATION REQUIREMENTS. |
| 21 | INSTALL EXHAUST FAN THERMOSTAT AT 4.5 FT. AFF. |


B&H Engineers, Inc
511 E John Carpenter Fwy
Suite 250
Irving, TX 75062
www.BandHEngineers.com
Registration No. 9102


TEXAS PARKS & WILDLIFE


GSBS ARCHITECTS
7291 GLEVIEW DRIVE
FORT WORTH, TX 76180
P: 817.589.1722
GSBSARCHITECTS.COM


STATE OF TEXAS
CHRISTOPHER D. SIMS
119237
LICENSED
PROFESSIONAL ENGINEER

21-01-22

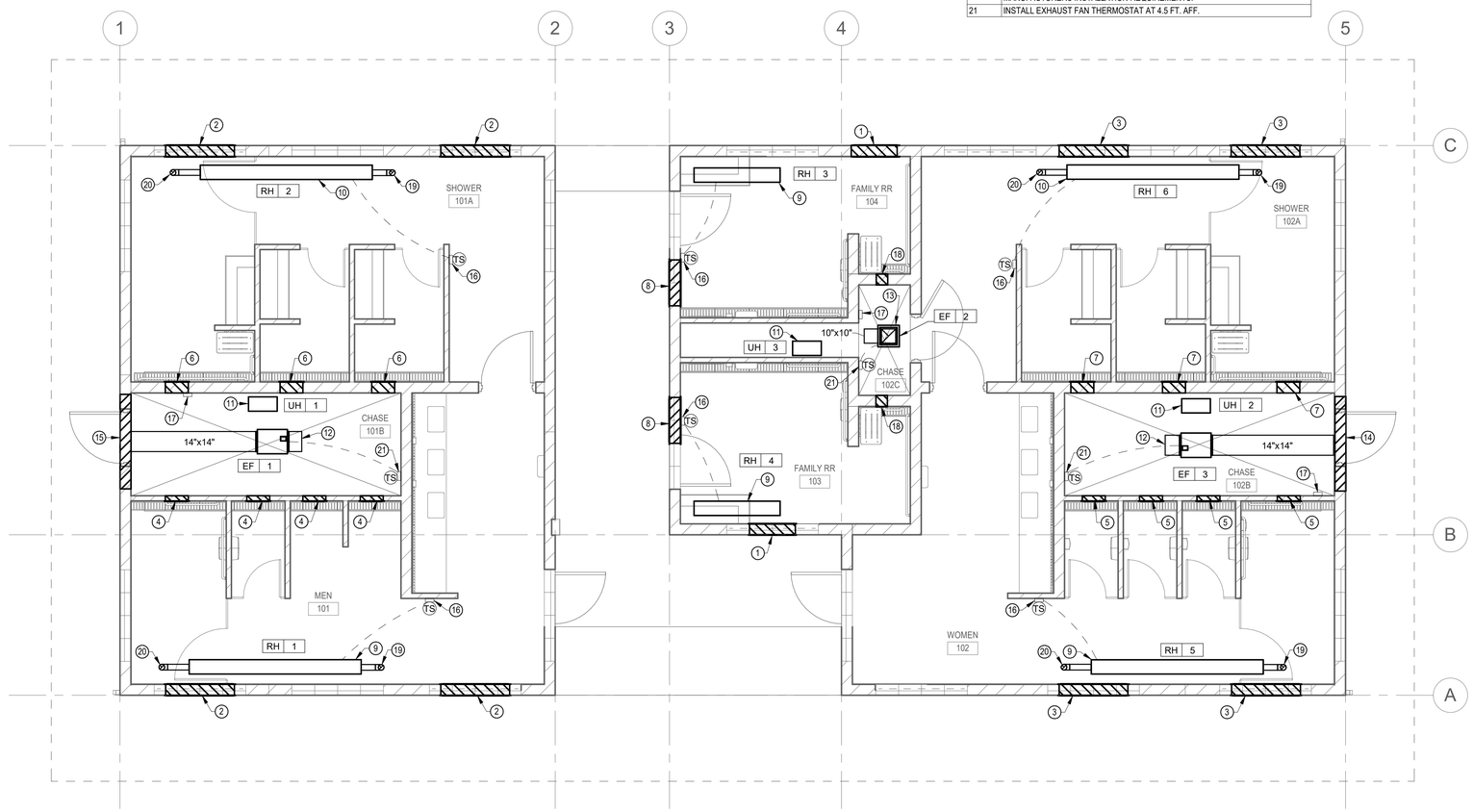


1 MECHANICAL PLAN
SCALE: 1/4" = 1'-0"

PROJECT NORTH

# EISENHOWER STATE PARK

**RESTROOM REPLACEMENT**

PROJECT NUMBER: 1210136

DATE: 21-01-22
DESIGNED BY: LCA
DRAWN BY: LCA
REVIEWED BY: CDS
REVISED:
REVISED:
REVISED:

**SHEET TITLE**
MECHANICAL PLAN

SHEET NUMBER
**M101**

## EXHAUST FAN SCHEDULE

| DESIGNATION TAG | DESIGNATION NUMBER | SERVES | LOCATION | CFM | ESP (IN. W.G.) | DRIVE TYPE | HP | BHP | MOTOR V | MOTOR PH | MOTOR Hz | CONTROL | DESIGN BASIS MANUFACTURER | DESIGN BASIS MODEL | WEIGHT (LBS) | NOTES |
|---|---|---|---|---|---|---|---|---|---|---|---|---|---|---|---|---|
| EF | 1 | MENS RR | CHASE 101B | 800 | 0.50 | DIRECT | 1/4 | 0.12 | 120 | 1 | 60 | THERMOSTAT | GREENHECK | SQ-100-VG | 56 | 1 - 4 |
| EF | 2 | FAMILY RR 104 | FAMILY RR 104 | 150 | 0.50 | DIRECT | 1/10 | 0.05 | 120 | 1 | 60 | THERMOSTAT | GREENHECK | SQ-80-VG | 41 | 1 - 4 |
| EF | 3 | WOMENS RR | CHASE 102B | 800 | 0.50 | DIRECT | 1/4 | 0.12 | 120 | 1 | 60 | THERMOSTAT | GREENHECK | SQ-100-VG | 56 | 1 - 4 |

NOTES:
1. PROVIDE WITH DISCONNECT SWITCH.
2. PROVIDE WITH THERMOSTAT. INTERLOCK FAN WITH LIGHT/OCCUPANCY SENSOR. FAN TO OPERATE WHEN TEMPERATURE EXCEEDS 80 DEG. F. OR WHEN THE SPACE IS OCCUPIED.
3. PROVIDE MOTORIZED DAMPER.
4. PROVIDE WITH FAN SPEED CONTROLLER.

## UNIT HEATER SCHEDULE

| DESIGNATION TAG | DESIGNATION NUMBER | SERVICE | TOTAL AIR CFM | HEATING CAPACITY (KW) | TEMPERATURE RISE (°F) | ELECTRICAL DATA HP | ELECTRICAL DATA V | ELECTRICAL DATA PH | ELECTRICAL DATA Hz | ELECTRICAL DATA MCA | DESIGN BASIS MANUFACTURER | DESIGN BASIS MODEL | NOTES |
|---|---|---|---|---|---|---|---|---|---|---|---|---|---|
| UH | 1 | PLUMBING CHASE | 350 | 3.0 | 27 | 0.01 | 240 | 1 | 60 | 12.5 | MARLEY | MUH03-21 | 1 - 2 |
| UH | 2 | PLUMBING CHASE | 350 | 3.0 | 27 | 0.01 | 240 | 1 | 60 | 12.5 | MARLEY | MUH03-21 | 1 - 2 |
| UH | 3 | PLUMBING CHASE | 350 | 3.0 | 27 | 0.01 | 240 | 1 | 60 | 12.5 | MARLEY | MUH03-21 | 1 - 2 |

NOTES:
1. PROVIDE WITH INTEGRAL THERMOSTAT. SET THERMOSTAT TO 45 DEG. F.
2. SUSPEND UNIT HEATER AT 8'-0" AFF.

## RADIANT HEATER SCHEDULE (PROPANE)

| DESIGNATION TAG | DESIGNATION NUMBER | SERVICE | GAS INPUT (LOW/HIGH) (BTUH) | ELECTRICAL DATA V | ELECTRICAL DATA PH | ELECTRICAL DATA Hz | LENGTH (FT) | DESIGN BASIS MANUFACTURER | DESIGN BASIS MODEL | NOTES |
|---|---|---|---|---|---|---|---|---|---|---|
| RH | 1 | MENS RR | 20,000/40,000 | 120 | 1 | 60 | 10 | CALCANA | SR-40 | 1 |
| RH | 2 | MENS RR | 20,000/40,000 | 120 | 1 | 60 | 10 | CALCANA | SR-40 | 1 |
| RH | 5 | WOMENS RR | 20,000/40,000 | 120 | 1 | 60 | 10 | CALCANA | SR-40 | 1 |
| RH | 6 | WOMENS RR | 20,000/40,000 | 120 | 1 | 60 | 10 | CALCANA | SR-40 | 1 |

NOTES:
1. SUSPEND RADIANT HEATER AT 10'-0" AFF AT A 45 DEGREE TILT.

## RADIANT HEATER SCHEDULE (ELECTRIC)

| DESIGNATION TAG | DESIGNATION NUMBER | SERVICE | HEATING CAPACITY (KW) | ELECTRICAL DATA V | ELECTRICAL DATA PH | ELECTRICAL DATA Hz | ELECTRICAL DATA MCA | DESIGN BASIS MANUFACTURER | DESIGN BASIS MODEL | NOTES |
|---|---|---|---|---|---|---|---|---|---|---|
| RH | 3 | FAMILY RR | 3.2 | 240 | 1 | 60 | 13 | KING ELECTRICAL | RH-33B1 | 1 |
| RH | 4 | FAMILY RR | 3.2 | 240 | 1 | 60 | 13 | KING ELECTRICAL | RH-33B1 | 1 |

NOTES:
1. SUSPEND RADIANT HEATER AT 8'-0" AFF AT A 45 DEGREE TILT.

## LOUVER SCHEDULE

| SERVICE | TYPE | DIMENSIONS (IN) | MANUFACTURER | MODEL |
|---|---|---|---|---|
| EXHAUST | STATIONARY | PER ARCHITECTURAL PLANS | RUSKIN | ELF40V |
| INTAKE | STATIONARY | PER ARCHITECTURAL PLANS | RUSKIN | ELF40V |

NOTES:
1. LOUVER IS TO BE DRAINABLE WEATHER RESISTANT TYPE.
2. BLADES ARE TO BE SIGHT PROOF.
3. COLOR IS TO BE COORDINATED WITH ARCHITECT.

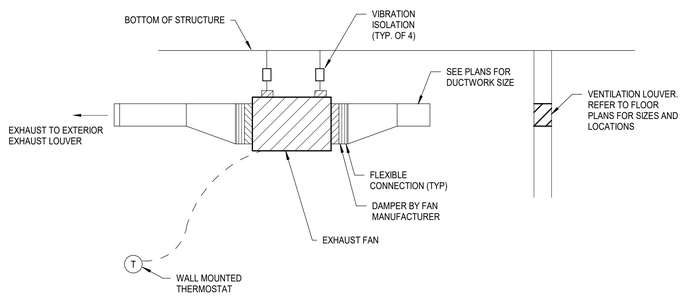


NOTES:
1. REFER TO PLANS FOR DUCTWORK CONFIGURATION FOR EACH INDIVIDUAL ROOM EXHAUST FAN. REFER TO SPECIFICATIONS FOR SPECIFIC EXHAUST FAN, VIBRATION ISOLATOR, FLEXIBLE DUCT, EXHAUST DUCT AND FAN MOUNTING REQUIREMENTS, ETC.
2. SET SPEED CONTROLLER TO FAN SCHEDULED AIR QUANTITY.

2 INLINE EXHAUST FAN DETAIL
SCALE: 12" = 1'-0"

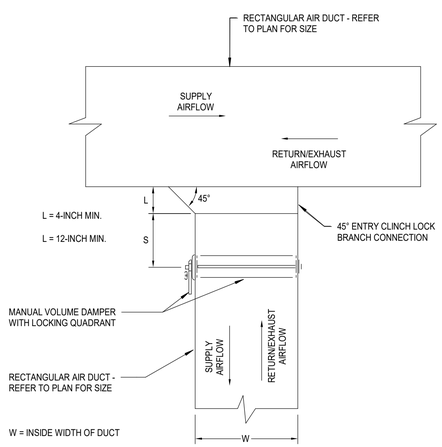


NOTE:
1. TYPICAL INSTALLATION DETAIL TO BE APPLIED TO RECTANGULAR BRANCH DUCT TAKE-OFFS FROM RECTANGULAR TRUNK DUCTS. APPLIES TO SUPPLY, RETURN, AND EXHAUST DUCTS.

1 LOW PRESS RECTANGULAR BRANCH TAKEOFF
SCALE: NOT TO SCALE


B&H Engineers, Inc
511 E John Carpenter Fwy
Suite 250
Irving, TX 75062
www.BandHEngineers.com
Registration No. 9102

TEXAS PARKS & WILDLIFE

GSBS ARCHITECTS
7291 GLEVIEW DRIVE
FORT WORTH, TX 76180
817 589 1722
GSBSARCHITECTS.COM


STATE OF TEXAS
CHRISTOPHER D. SIMS
119237
LICENSED
PROFESSIONAL ENGINEER
21-01-22

# EISENHOWER STATE PARK

**RESTROOM REPLACEMENT**

PROJECT NUMBER: 1210136

DATE: 21-01-22
DESIGNED BY: LCA
DRAWN BY: LCA
REVIEWED BY: CDS
REVISED:
REVISED:
REVISED:

**SHEET TITLE**
MECHANICAL EQUIPMENT SCHEDULES

SHEET NUMBER
**M401**

# PLUMBING ABBREVIATIONS, SYMBOLS AND NOTES (THIS IS A STANDARD LEGEND, NOT ALL SYMBOLS MAY BE APPLICABLE TO PROJECT)

B&H Engineers, Inc
511 E John Carpenter Fwy
Suite 250
Irving, TX 75062
www.BandHEngineers.com
Registration No. 9102

## ABBREVIATIONS

| | | | |
|---|---|---|---|
| ABV | ABOVE | L | LAVATORY |
| A/C | AIR CONDITIONING | NG | NATURAL GAS |
| AD | ACCESS DOOR OR PANEL | NTS | NOT TO SCALE |
| A. DR | AREA DRAIN | OA | OUTSIDE AIR |
| AFF | ABOVE FINISH FLOOR | OBD | OPPOSED BLADE DAMPER |
| AFG | ABOVE FINISHED GRADE | OC | ON CENTER |
| BCV | BALL CHECK VALVE | OD | OUTSIDE DIAMETER |
| BFF | BELOW FINISHED FLOOR | PSI | POUNDS PER SQUARE INCH |
| BFP | BACKFLOW PREVENTER | PVC | POLYVINYL CHLORIDE |
| BFG | BELOW FINISHED GRADE | RA | RETURN AIR |
| BLDG | BUILDING | RD | ROOF DRAIN |
| BOP | BOTTOM OF PIPE | S | SINK |
| BTUH | BRITISH THERMAL UNITS PER HOUR | SS | SANITARY SEWER |
| | | SA | SUPPLY AIR |
| BWV | BACK WATER VALVE | SD | SMOKE DAMPER |
| CU | CONDENSING UNIT | S.E. | SERVICE ENTRANCE |
| CFH | CUBIC FEET PER HOUR | SF | SUPPLY FAN, SQUARE FEET |
| CFM | CUBIC FEET PER MINUTE | SPEC. | SPECIFICATION |
| CO | CLEANOUT | SPRK | SPRINKLER |
| CW | COLD WATER | SH | SHOWER |
| D | DRAIN | TCO | TWO-WAY CLEANOUT |
| DR | DRAIN | TEMP | TEMPERATURE |
| DS | DOWN SPOUT | TD | TRENCH DRAIN |
| DW | DOMESTIC WATER | TMV | THERMOSTATIC MIXING VALVE |
| EA | EXHAUST AIR | | |
| EF | EXHAUST FAN | TSTAT | THERMOSTAT |
| EFF | EFFICIENCY | TYP | TYPICAL |
| ELEC | ELECTRICAL | U | URINAL |
| ELEV | ELEVATION | UH | UNIT HEATER |
| EUH | ELECTRIC UNIT HEATER | V | VENT, VOLT |
| EWC | ELECTRIC WATER COOLER | VTR | VENT THRU ROOF |
| EX | EXISTING | WC | WATER CLOSET |
| FD | FLOOR DRAIN | WCO | WALL CLEAN OUT |
| FH | FIRE HYDRANT | YCO | YARD CLEANOUT |
| FP | FIRE PROTECTION | YD | YARD DRAIN |
| FU | FIXTURE UNIT | YH | YARD HYDRANT |
| FV | FLUSH VALVE -FLUSHOMETER | | |
| GCO | GRADE CLEAN OUT | | |
| GPM | GALLONS PER MINUTE | | |
| HW | HOT WATER | | |
| HWS | HOT WATER SUPPLY | | |
| IE | INVERT ELEVATION | | |
| INV | INVERT | | |

## PLUMBING LEGEND

| | |
|---|---|
| | SANITARY OR WASTE PIPING (SS) |
| | VENT PIPING (V) |
| | COLD WATER PIPING (CW) |
| | HOT WATER PIPING (HW) |
| | NATURAL GAS PIPING (G) |
| | PIPING DOWN |
| | RISE OR DROP PIPING |
| | PIPING UP -OR- PIPING UP & DOWN |
| | CAP ON END OF PIPE |
| | CLEANOUT (WALL OR CEILING) (CO) |
| | FLOOR CLEANOUT (FCO) |
| 1 | REFER TO KEYED NOTE |
| | FLOOR DRAIN (FD) |
| (E) | EXISTING |
| (N) | NEW |
| | NEW CONNECTION |
| IE=100.00' | INVERT ELEVATION |
| 1/4" PER FOOT | QUARTER OF AN INCH SLOPE |
| 1/8" PER FOOT | 1/8TH OF AN INCH SLOPE |
| | DELTA CHANGE SYMBOL |
| P 1 | RISER FLAG |

## BUILDING CODE SUMMARY

APPLICABLE CODES
FOR DESIGN & CONSTRUCTION

| | Year | | Year |
|---|---|---|---|
| International Building Code | 2015 | National Electrical Code | 2020 |
| International Mechanical Code | 2015 | Uniform Code for Building Conservation | 2015 |
| International Plumbing Code | 2015 | ADA Accessibility Guidelines ICC/ANSI A117.1 | 2010 |
| International Fire Code | 2015 | | |
| Energy Code | ASHRAE 90.1 | | |

## PLUMBING GENERAL NOTES

GENERAL CONDITONS:

1. THE GENERAL CONTRACTOR SHALL ACCUMULATE ALL RELATED INFORMATION FROM THEIR SUB-CONTRACTORS AND SUPPLIERS THAT WILL ALLOW THE GENERAL CONTRACTOR TO INCORPORATE ALL ELEMENTS AND WORK OF ALL TRADES INTO A FULLY COORDINATED SET OF SHOP DRAWINGS PRIOR TO THE FABRICATION OR INSTALLATION OF ANY WORK SO AS TO CONFIRM PROPER ACCESS TO ALL ELEMENTS FOR PROPER OPERATION AND MAINTENANCE SERVICE SPACE.

2. ALL WORK BY CONTRACTOR SHALL CONFORM TO ALL APPLICABLE FEDERAL AND STATE BUILDING CODES INCLUDING ASHRAE STANDARD 90.1.

3. MATERIALS AND EQUIPMENT FURNISHED UNDER THE CONTRACT SHALL BE NEW AND SHALL BEAR THE U.L. LABEL WHERE APPLICABLE, UNLESS NOTED OTHERWISE. ALL WORK SHALL BE GUARANTEED AGAINST DEFECTIVE MATERIALS AND WORKMANSHIP FOR A PERIOD OF NOT LESS THAN ONE YEAR AFTER COMPLETION AND ACCEPTANCE BY THE OWNER.

4. CONTRACTOR SHALL INSTALL SYSTEMS WITHOUT INTERFERENCE AND IN STRICT COORDINATION WITH OTHER TRADES.

5. MATERIALS AND WORKMANSHIP SHALL COMPLY WITH THE CONTRACT DOCUMENTS AND APPLICABLE CODES AND STANDARDS. IN CASE OF DIFFERENCE BETWEEN APPLICABLE CODES AND STANDARDS AND THE CONTRACT DOCUMENTS, THE CONTRACTOR SHALL PROMPTLY NOTIFY THE OWNER'S REPRESENTATIVE IN WRITING OF SUCH DIFFERENCE. SHOULD THE CONTRACTOR PERFORM ANY WORK THAT DOES NOT COMPLY WITH REQUIREMENTS OF APPLICABLE CODES AND STANDARDS THE CONTRACTOR SHALL BEAR ALL COSTS ARISING IN CORRECTING SUCH DEFECTS.

6. PROVIDE ACCESS, INCLUDING NECESSARY ACCESS DOORS, FOR EQUIPMENT REQUIRING ADJUSTMENT OR MAINTENANCE. LOCATE ALL EQUIPMENT SUCH THAT OPERATION OR MAINTENANCE IS NOT RESTRICTED.

7. DO NOT RUN PIPING OR LOCATE EQUIPMENT, WITH RESPECT TO SWITCHBOARDS, PANELBOARDS, POWER PANELS, MOTOR CONTROL CENTERS OR DRY TYPE TRANSFORMERS WITHIN APPLICABLE CODE CLEARANCES OR MANUFACTURER'S RECOMMENDED SERVICE CLEARANCES, WHICHEVER IS GREATER.

8. ALL WORK, METHODS AND INSTALLATIONS INVOLVED IN THE PLUMBING DESIGN SHALL BE IN ACCORDANCE WITH THE BUILDING CODES LISTED IN THE BUILDING CODE SUMMARY ON THIS SHEET AND THE COVER SHEET.

9. THIS CONTRACTOR SHALL COORDINATE ROUTING OF PIPING IN CEILING SPACES WITH MECHANICAL AND ELECTRICAL EQUIPMENT, DUCTWORK AND CONDUIT. SHOULD A CONFLICT OCCUR THIS CONTRACTOR SHALL NOTIFY THE ARCHITECT/ ENGINEER PRIOR TO INSTALLING AN ALTERNATE PIPING PLAN.

10. PIPE LOCATIONS SHOWN ARE FOR ILLUSTRATION ONLY. LOCATE SERVICE LINES AND DROPS AGAINST WALLS AND BEHIND EQUIPMENT WHERE POSSIBLE.

11. FOR EACH WASTE WATER LATERAL, CONTRACTOR SHALL SUPPLY, INSTALL, AND CONNECT SERVICE TO EQUIPMENT. SLOPE WASTE WATER A MINIMUM OF 1/4" PER FOOT UNLESS NOTED OTHERWISE.

12. REFER TO PLUMBING SPECIFICATIONS FOR PRESSURE TESTING OF SYSTEM PRIOR TO FINAL HOOK-UP.

13. CONTRACTOR SHALL LABEL NEW PIPE SPECIFYING UTILITY TYPE AT MAXIMUM 20 FOOT INTERVALS. LETTERING FOR PIPING 2 1/2" OR SMALLER SHALL BE 3/4" MINIMUM. LETTERING FOR PIPING 3" AND LARGER SHALL BE 1 1/2" MINIMUM. SEE PLUMBING SPECIFICATIONS.

14. PROVIDE CLEANOUTS AT NO MORE THAN 75 FT. APART IN HORIZONTAL SANITARY DRAINAGE LINES 4" SIZE OR LESS.

15. SECURE AND VERIFY ALL MEASUREMENTS AND CONDITIONS AT JOB BEFORE PROCEEDING WITH FABRICATION OF WORK.

16. ROUGH IN ALL PIPING THRU FACE OF WALL WHERE POSSIBLE, EXCEPT IN OUTSIDE WALLS. TERMINATE WITH SHORT NIPPLE AND CAP.

17. ALL FIXTURES TO BE EQUIPPED WITH STOP VALVES IN ACCESSIBLE LOCATIONS.

18. COORDINATE EXACT LOCATION AND INVERT ELEVATION OF ALL SANITARY AND DOMESTIC WATER PIPING EXITS FROM STRUCTURE WITH THE SITE UTILITY CONTRACTOR.

19. REFER TO DRAINAGE AND UTILITY DRAWINGS FOR CONTINUATION OF ALL PIPING BEYOND 5'-0" FROM BUILDING.

20. CONTRACTOR SHALL COORDINATE INVERT ELEVATIONS OF DOMESTIC WATER, SANITARY SEWER, AND GAS LINE WITH THE CIVIL ENGINEER WHERE CROSSING OCCURS.

21. CONTRACTOR SHALL SLEEVE ALL PIPING THAT PASSES PARALLEL/PERPENDICULAR/VERTICALLY THROUGH THE GRADE BEAM WITH A DIAMETER 2 INCHES GREATER THAN PIPE DIAMETER. SLEEVE SHALL BE LOCATED AT MID-DEPTH OF GRADE BEAM OR OTHERWISE CONTACT ENGINEER FOR APPROVAL.

DEMOLITION NOTES:

1. THE SCOPE OF DEMOLITION WORK INCLUDES DEMOLITION AND REMOVAL OF ALL EXISTING PLUMBING EQUIPMENT AND PIPING SHOWN TO BE REMOVED ON THE DEMOLITION DRAWINGS.

2. LOCATION OF EXISTING EQUIPMENT & PIPING SHOWN ON THESE DRAWINGS IS APPROXIMATE. THE CONTRACTOR IS RESPONSIBLE FOR THE CAREFUL STUDY OF ALL PROPOSED WORK, THE VERIFICATION OF FIELD CONDITIONS, AND THE PERFORMANCE OF COMPLETE DEMOLITION WORK RELATED THERETO.

3. ALL ITEMS CALLED OUT FOR "SALVAGE" SHALL BE CLEANED AND USED ON THIS PROJECT OR CLEANED AND DELIVERED TO THE OWNER IN AN ORDERLY MANNER.

4. ALL DEMOLITION MATERIALS NOT SALVAGED SHALL BECOME THE PROPERTY OF THE CONTRACTOR AND SHALL BE DISPOSED OF OFF SITE. ALL METALS SHALL BE DISPOSED IN A METAL DUMPSTER. CONTRACTOR SHALL SUPPLY METAL DUMPSTER AND LOCATION SHALL BE COORDINATED WITH THE OWNER.

5. CONTRACTOR SHALL SUBMIT A DEMOLITION PHASING PLAN TO THE TPWD CONSTRUCTION MANAGER FOR REVIEW AND COMMENT PRIOR TO IMPLEMENTING DEMOLITION ACTIVITIES.

6. EXISTING UTILITIES SHOWN ON THESE PLANS ARE APPROXIMATE. CONTRACTOR SHALL LOCATE ALL UTILITIES AFFECTED BY CONSTRUCTION ACTIVITIES AND SHALL PROTECT THEM FROM DAMAGE OR ADJUST AS NECESSARY TO ACTUAL CONDITIONS.

7. CONTRACTOR SHALL COORDINATE ALL SYSTEM SHUTDOWNS AND TESTING WITH THE OWNER.

8. NO EQUIPMENT SHALL BE REMOVED/DEMOLISHED BEFORE REPLACEMENT EQUIPMENT ARRIVES ON SITE AND VERIFIED FROM OWNER THAT EQUIPMENT CAN BE REMOVED/DEMOLISHED.

TEXAS PARKS & WILDLIFE

GSBS ARCHITECTS
7291 GLENVIEW DRIVE
FORT WORTH, TX 76180
817.335.1722
GSBSARCHITECTS.COM

STATE OF TEXAS
CHRISTOPHER D. SIMS
119237
LICENSED
PROFESSIONAL ENGINEER
21-01-22

# EISENHOWER STATE PARK

**RESTROOM REPLACEMENT**
PROJECT NUMBER: 1210136

DATE: 21-01-22
DESIGNED BY: ML
DRAWN BY: ML
REVIEWED BY: CS
REVISED:
REVISED:
REVISED:

**SHEET TITLE**
PLUMBING COVER SHEET

SHEET NUMBER
**P001**

B&H Engineers, Inc
511 E John Carpenter Fwy
Suite 250
Irving, TX 75062
www.BandHEngineers.com
Registration No. 9102

TEXAS PARKS & WILDLIFE

## PLUMBING GENERAL NOTES:

1. CONTRACTOR SHALL VERIFY ALL EXISTING PIPING, INVERTS AND EXACT LOCATIONS OF EXISTING PLUMBING EQUIPMENT BEFORE BEGINNING ANY WORK.
2. INSTALL ISOLATION VALVES AT EACH FIXTURE OR RESTROOM GROUP OF FIXTURES. NO VALVES SHALL BE INSTALLED OVER 11'-0" A.F.F..
3. ALL LAVATORIES, SINKS AND URINALS ARE TO HAVE AN INDIVIDUAL CLEANOUT LOCATED 6" ABOVE THE FLOOD RIM OF THE HIGHEST FIXTURE ON THE STACK.
4. REFER TO PLUMBING FIXTURE SCHEDULE (P401) FOR PIPE SIZES TO INDIVIDUAL FIXTURES.
5. PROVIDE AND INSTALL TRENCH DRAINS THAT ARE MANUFACTURED WITH A MINIMUM OF 2% (1/4" PER FOOT) SLOPE TO SANITARY PIPING SHOW IN PLANS.

GSBS ARCHITECTS
7291 GLEVIEW DRIVE
FORT WORTH, TX 76180
P: 817.589.1722
GSBSARCHITECTS.COM

STATE OF TEXAS
CHRISTOPHER D. SIMS
119237
LICENSED PROFESSIONAL ENGINEER

21-01-22

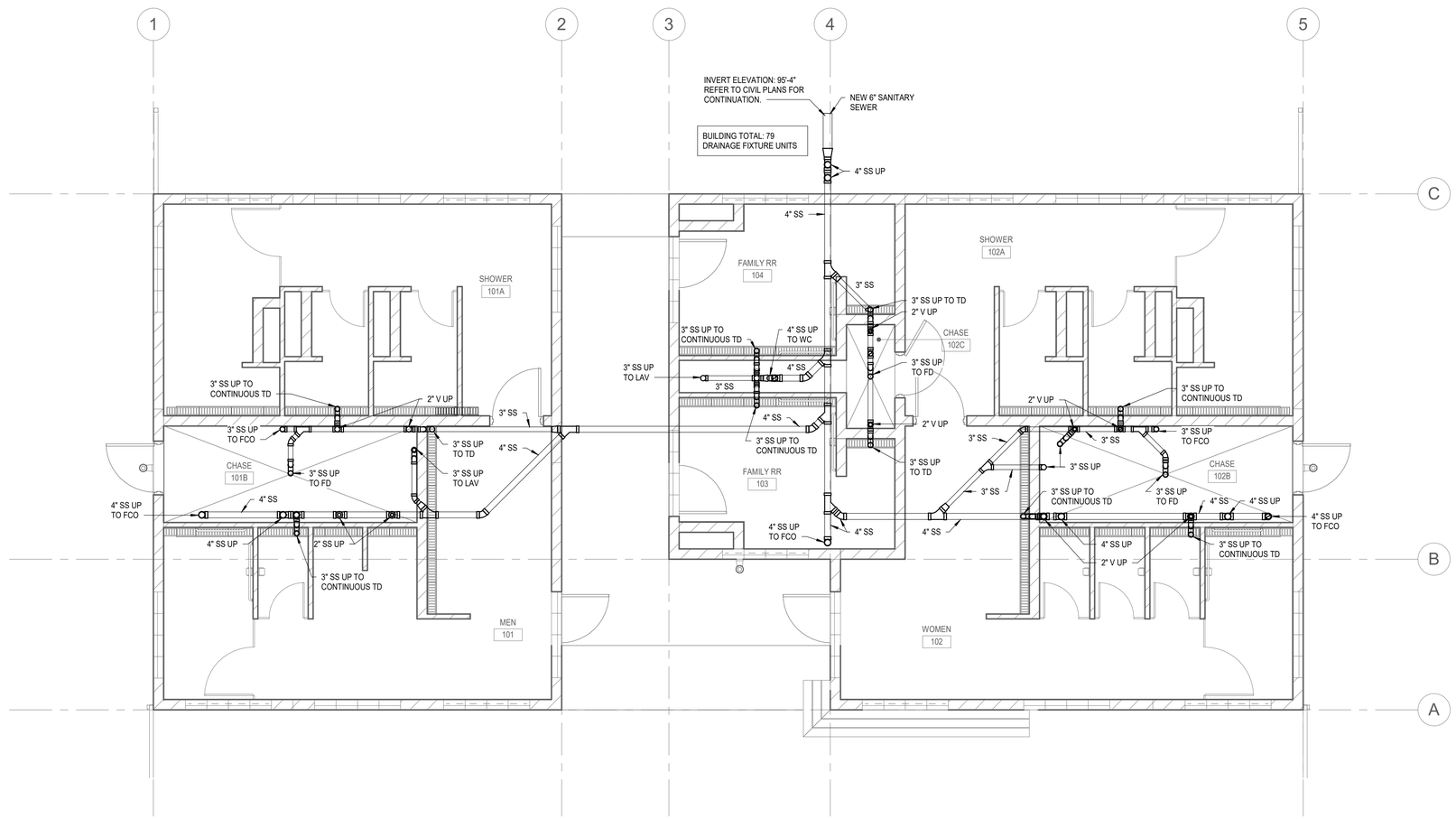


1 PLUMBING UNDERGROUND PLAN - SANITARY & VENT
SCALE: 1/4" = 1'-0"

# EISENHOWER STATE PARK

**RESTROOM REPLACEMENT**

PROJECT NUMBER: 1210136

DATE: 21-01-22
DESIGNED BY: ML
DRAWN BY: ML
REVIEWED BY: CS
REVISED:
REVISED:
REVISED:

**SHEET TITLE**
PLUMBING UNDERGROUND PLAN - SANITARY & VENT

PROJECT NORTH

SHEET NUMBER
**P101**

B&H Engineers, Inc
511 E John Carpenter Fwy
Suite 250
Irving, TX 75062
www.BandHEngineers.com
Registration No. 9102

TEXAS PARKS & WILDLIFE

GSBS ARCHITECTS
7291 GLEVIEW DRIVE
FORT WORTH, TX 76180
P: 817.589.1722
GSBSARCHITECTS.COM

STATE OF TEXAS
CHRISTOPHER D. SIMS
119237
LICENSED PROFESSIONAL ENGINEER

21-01-22

## PLUMBING GENERAL NOTES:

1. CONTRACTOR SHALL VERIFY ALL EXISTING PIPING, INVERTS AND EXACT LOCATIONS OF EXISTING PLUMBING EQUIPMENT BEFORE BEGINNING ANY WORK.
2. INSTALL ISOLATION VALVES AT EACH FIXTURE OR RESTROOM GROUP OF FIXTURES. NO VALVES SHALL BE INSTALLED OVER 11'-0" A.F.F..
3. ALL LAVATORIES, SINKS AND URINALS ARE TO HAVE AN INDIVIDUAL CLEANOUT LOCATED 6" ABOVE THE FLOOD RIM OF THE HIGHEST FIXTURE ON THE STACK.
4. REFER TO PLUMBING FIXTURE SCHEDULE (P401) FOR PIPE SIZES TO INDIVIDUAL FIXTURES.
5. PROVIDE AND INSTALL TRENCH DRAINS THAT ARE MANUFACTURED WITH A MINIMUM OF 2% (1/4" PER FOOT) SLOPE TO SANITARY PIPING SHOW IN PLANS.

## NOTES BY SYMBOL:" ○ "

| | |
|---|---|
| 1 | 5" MANUFACTURER'S CONCENTRIC VENT KIT FROM GAS WATER HEATERS THRU WALL. LOCATE CENTER OF VENT @12'-0" A.F.F. WITH 3'-0" SEPARATION BETWEEN VENTS. |

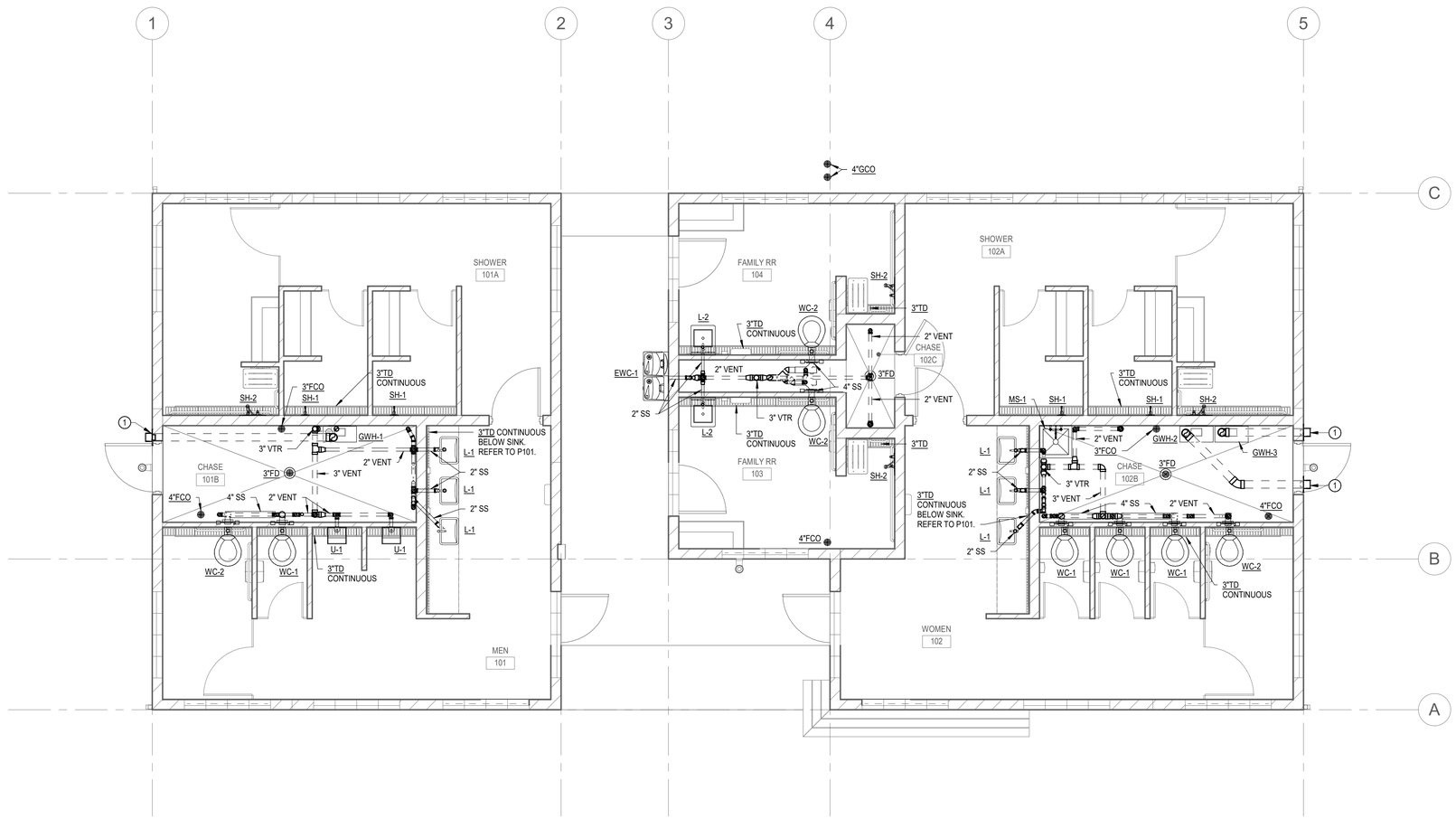


1 PLUMBING ABOVEGROUND PLAN - SANITARY & VENT

SCALE: 1/4" = 1'-0"

PROJECT NORTH

# EISENHOWER STATE PARK

**RESTROOM REPLACEMENT**

PROJECT NUMBER: 1210136

DATE: 21-01-22
DESIGNED BY: ML
DRAWN BY: ML
REVIEWED BY: CS
REVISED:
REVISED:
REVISED:

**SHEET TITLE**
PLUMBING ABOVEGROUND PLAN - SANITARY & VENT

SHEET NUMBER
**P102**

B&H Engineers, Inc
511 E John Carpenter Fwy
Suite 250
Irving, TX 75062
www.BandHEngineers.com
Registration No. 9102

TEXAS PARKS & WILDLIFE

GSBS ARCHITECTS
7291 GLEVIEW DRIVE
FORT WORTH, TX 76180
817.589.1722
GSBSARCHITECTS.COM

STATE OF TEXAS
CHRISTOPHER D. SIMS
119237
LICENSED
PROFESSIONAL ENGINEER

21-01-22

# EISENHOWER STATE PARK

**RESTROOM REPLACEMENT**

PROJECT NUMBER: 1210136

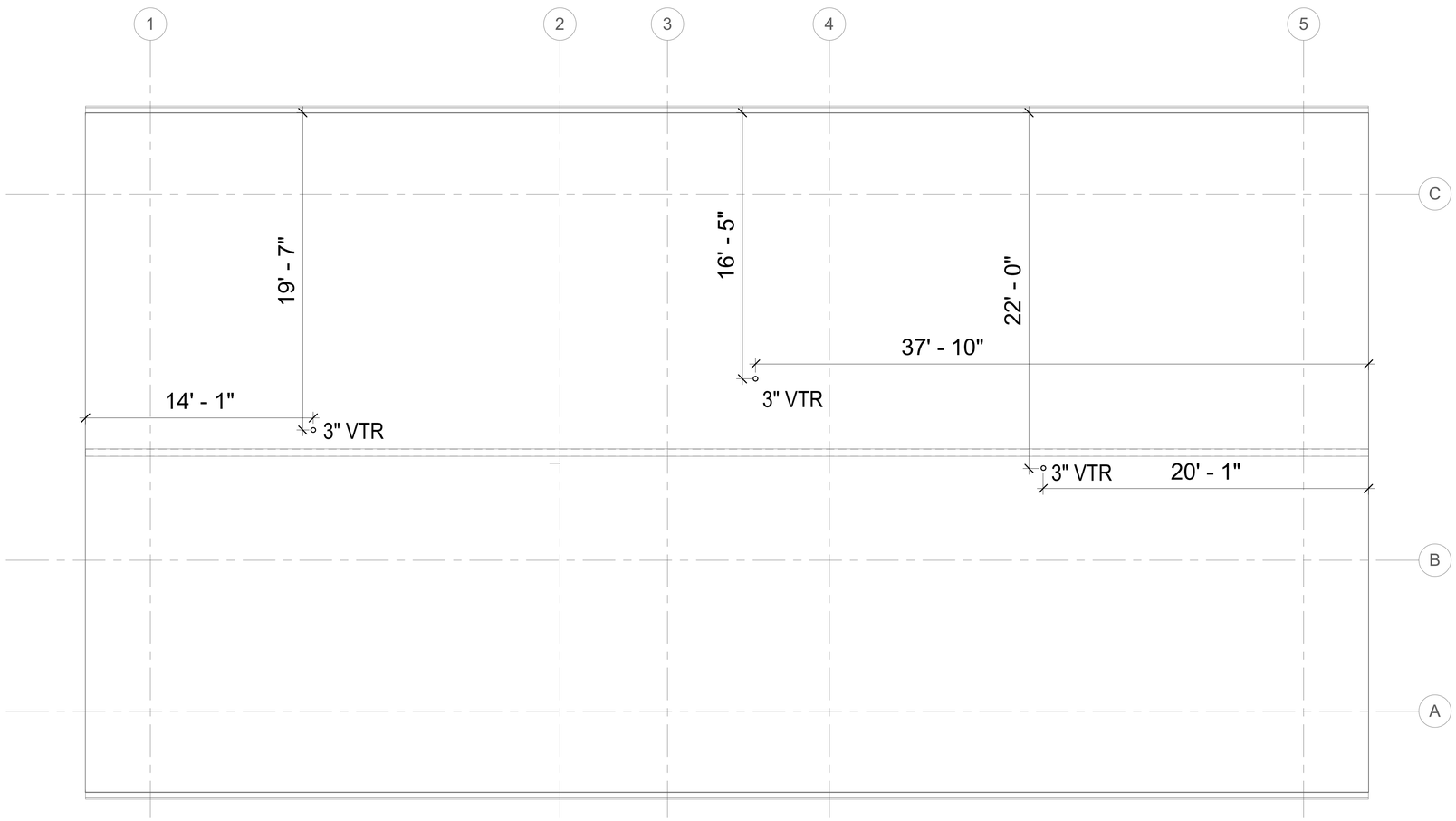


1 PLUMBING ROOF PLAN
SCALE: 1/4" = 1'-0"

PROJECT NORTH

DATE: 21-01-22
DESIGNED BY: ML
DRAWN BY: ML
REVIEWED BY: CS
REVISED:
REVISED:
REVISED:

**SHEET TITLE**
PLUMBING PLAN - ROOF

SHEET NUMBER
**P103**

B&H Engineers, Inc
511 E John Carpenter Fwy
Suite 250
Irving, TX 75062
www.BandHEngineers.com
Registration No. 9102

TEXAS PARKS & WILDLIFE

GSBS ARCHITECTS
7291 GLEVIEW DRIVE
FORT WORTH, TX 76180
817.589.1722
GSBSARCHITECTS.COM

STATE OF TEXAS
CHRISTOPHER D. SIMS
119237
LICENSED PROFESSIONAL ENGINEER
21-01-22

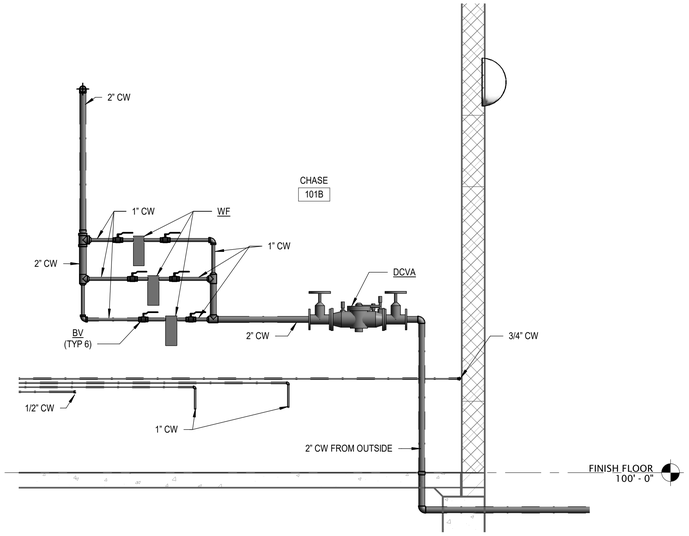


5 CHASE 101B WATER FILTERS
SCALE: 1/2" = 1'-0"

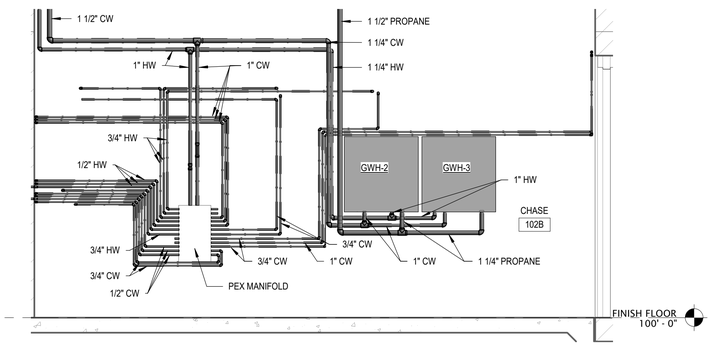


4 CHASE 102B PEX MANIFOLD
SCALE: 1/2" = 1'-0"

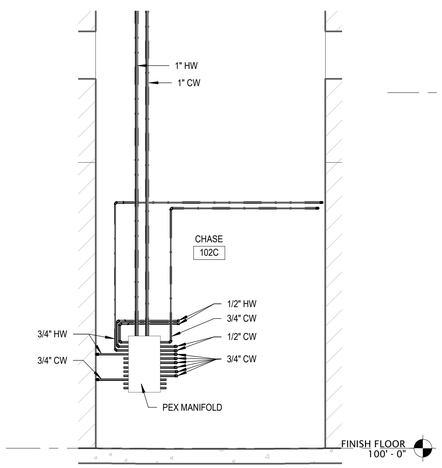


3 CHASE 102C PEX MANIFOLD
SCALE: 1/2" = 1'-0"

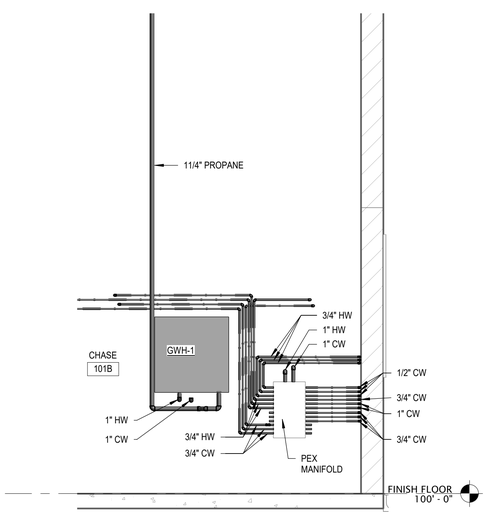


2 CHASE 101B PEX MANIFOLD
SCALE: 1/2" = 1'-0"

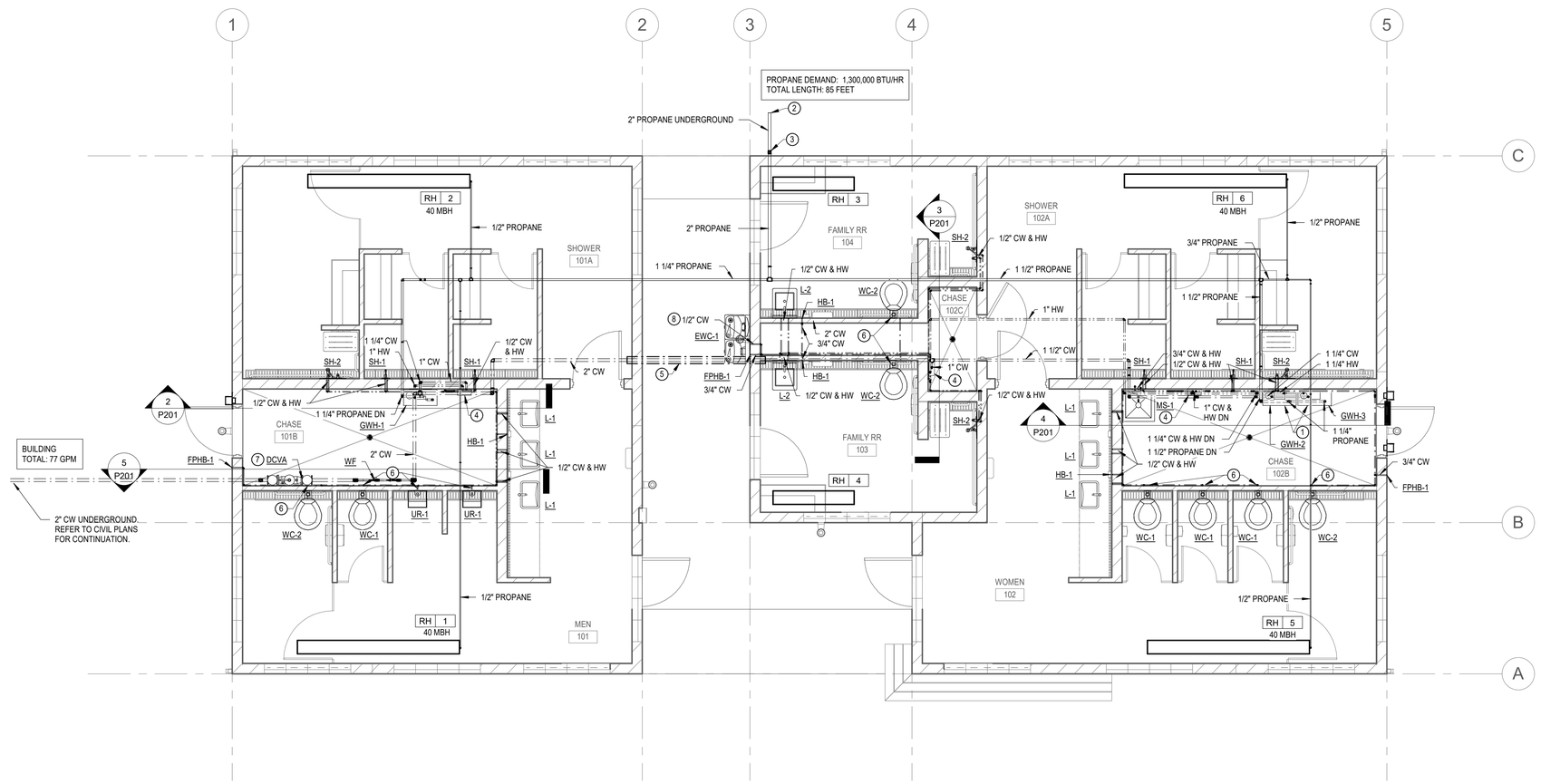


1 PLUMBING WATER & PROPANE PLAN
SCALE: 1/4" = 1'-0"

## PLUMBING GENERAL NOTES:

1. CONTRACTOR SHALL VERIFY ALL EXISTING PIPING, INVERTS AND EXACT LOCATIONS OF EXISTING PLUMBING EQUIPMENT BEFORE BEGINNING ANY WORK.
2. INSTALL ISOLATION VALVES AT EACH FIXTURE OR RESTROOM GROUP OF FIXTURES. NO VALVES SHALL BE INSTALLED OVER 11'-0" A.F.F..
3. ALL LAVATORIES, SINKS AND URINALS ARE TO HAVE AN INDIVIDUAL CLEANOUT LOCATED 6" ABOVE THE FLOOD RIM OF THE HIGHEST FIXTURE ON THE STACK.
4. REFER TO PLUMBING FIXTURE SCHEDULE (P401) FOR PIPE SIZES TO INDIVIDUAL FIXTURES.
5. PROVIDE AND INSTALL TRENCH DRAINS THAT ARE MANUFACTURED WITH A MINIMUM OF 2% (1/4" PER FOOT) SLOPE TO SANITARY PIPING SHOW IN PLANS.

## NOTES BY SYMBOL: "○ "

| | |
|---|---|
| 1 | PROVIDE MANUFACTURER'S EASY LINK SYSTEM TO CONNECT GWH-2 AND GWH-3 IN CHASE 102B. |
| 2 | 2" PROPANE LINE UNDERGROUND FROM NEW PROPANE TANK. REFER TO CIVIL PLANS FOR EXACT LOCATION OF NEW 1000 GALLON PROPANE TANK. |
| 3 | PROVIDE 2" PROPANE LINE WITH AN ABOVEGROUND SHUT-OFF VALVE. ROUTE PROPANE LINE UP EXTERIOR WALL AND PENETRATE WALL ABOVE CEILING SO THAT THE PIPE IS CONCEALED. PAINT EXPOSED PIPE WITH ANTI-CORROSION PAINT PER ARCHITECT'S PLANS. |
| 4 | PROVIDE A VIEGA MANABLOC PEX MANIFOLD MODEL V5630 WITH (24) 1/2" PORTS (9 HOT AND 15 COLD). PROVIDE INDIVIDUAL LINES FROM MANIFOLD TO FIXTURES IN IMMEDIATE AREA. |
| 5 | ROUTE 2" CW OVERHEAD CONCEALED ABOVE CEILING. PROVIDE WITH 2" INSULATION WRAP WITH A PVC PIPE OVER INSULATION. LEAVE PVC PIPE OPEN AT END OVER CHASE 102C TO ALLOW FOR CONDITIONED AIR INSIDE PVC PIPE. |
| 6 | PROVIDE COLD WATER LINE WITH A PEX COMPATIBLE WATER HAMMER ARRESTOR CLOSE TO FLUSH VALVE LOCATION. SIOUX CHIEF MODEL MINIRESTER 1/2" STAINLESS STEEL OR EQUAL. |
| 7 | PROVIDE 2" CW LINE WITH AN ABOVEGROUND DOUBLE CHECK VALVE, WATTS MODEL #LF007M1QT-S. INSTALL DEVICE ON WALL WITH 12" CLEARANCE ON ALL SIDES FOR MAINTENANCE. |
| 8 | PROVIDE A SHUT-OFF VALVE TO THE WATER LINE SERVING THE EWC-1 INSIDE OF CHASE 102C IN AN ACCESSIBLE LOCATION. |

# EISENHOWER STATE PARK

**RESTROOM REPLACEMENT**

PROJECT NUMBER: 1210136

DATE: 21-01-22
DESIGNED BY: ML
DRAWN BY: ML
REVIEWED BY: CS
REVISED:
REVISED:
REVISED:

**SHEET TITLE**
PLUMBING WATER & PROPANE PLAN AND SECTIONS

PROJECT NORTH

SHEET NUMBER
**P201**

B&H Engineers, Inc
511 E John Carpenter Fwy
Suite 250
Irving, TX 75062
www.BandHEngineers.com
Registration No. 9102

TEXAS PARKS & WILDLIFE

GSBS ARCHITECTS
7291 GLENVIEW DRIVE
FORT WORTH, TX 76180
P: 817.589.1722
GSBSARCHITECTS.COM

STATE OF TEXAS
CHRISTOPHER D. SIMS
119237
LICENSED
PROFESSIONAL ENGINEER

21-01-22

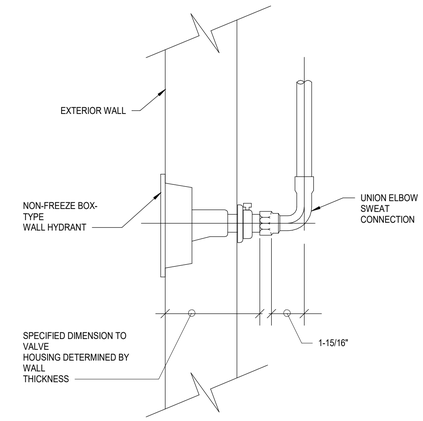


3 FREEZEPROOF WALL HYDRANT (FPWH) DETAIL

SCALE: NOT TO SCALE

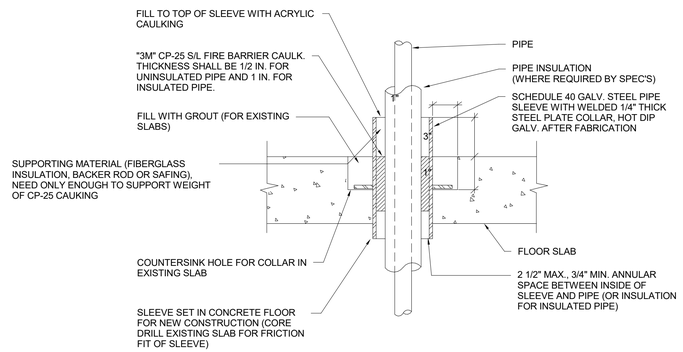


NOTE:
U.L. APPROVED PIPING ASSEMBLIES EQUAL TO U.L. SYSTEM #49 FOR UNINSULATED PIPE AND SYSTEM #91 FOR INSULATED PIPE.

5 INTERIOR FLOOR PENETRATION DETAIL

SCALE: NOT TO SCALE

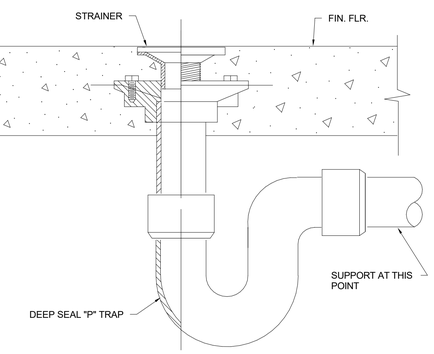


2 FLOOR DRAIN (FD-1) DETAIL

SCALE: NOT TO SCALE

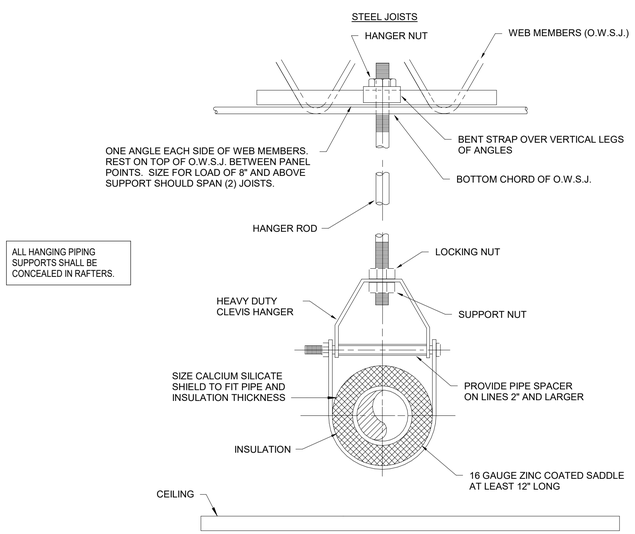


6 SINGLE INSULATED PIPE SUPPORT DETAIL

SCALE: NOT TO SCALE

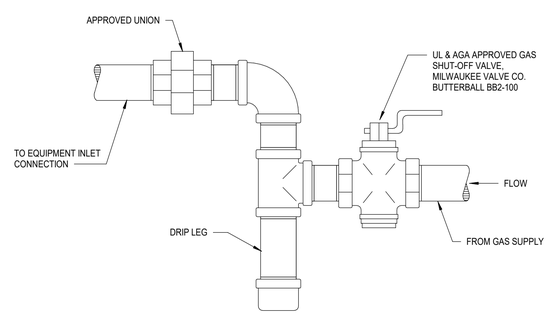


4 GAS CONNECTION DETAIL

SCALE: 1" = 1'-0"

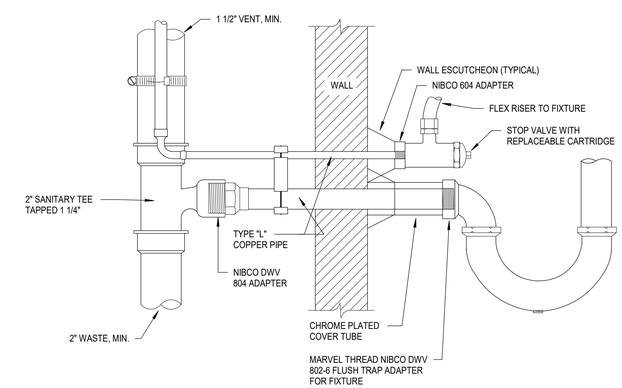


NOTES:
1. 1 1/4" PIPE REQUIRED FOR LAVATORIES.
2. 1 1/2" PIPE REQUIRED FOR SINKS.

1 FIXTURE CONNECTION DETAIL

SCALE: NOT TO SCALE

# EISENHOWER STATE PARK

**RESTROOM REPLACEMENT**

PROJECT NUMBER: 1210136

DATE: 21-01-22
DESIGNED BY: ML
DRAWN BY: ML
REVIEWED BY: CS
REVISED:
REVISED:
REVISED:

**SHEET TITLE**
PLUMBING DETAILS

SHEET NUMBER
**P301**

B&H Engineers, Inc
511 E John Carpenter Fwy
Suite 250
Irving, TX 75062
www.BandHEngineers.com
Registration No. 9102

TEXAS PARKS & WILDLIFE

GSBS ARCHITECTS
7291 GLEVIEW DRIVE
FORT WORTH, TX 76180
P: 817.589.1722
GSBSARCHITECTS.COM

STATE OF TEXAS
CHRISTOPHER D. SIMS
119237
LICENSED
PROFESSIONAL ENGINEER
21-01-22

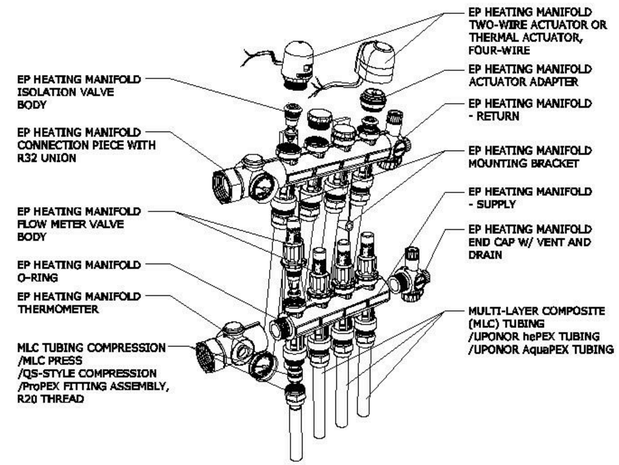


5 PIPING MANIFOLD DETAIL
SCALE: NOT TO SCALE

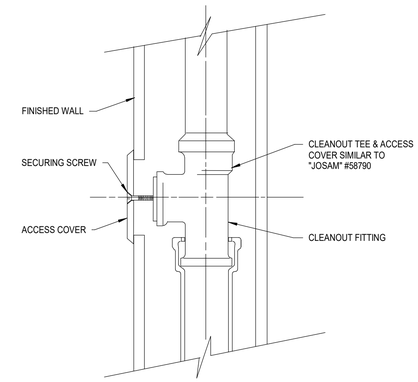


3 WALL CLEANOUT
SCALE: NOT TO SCALE

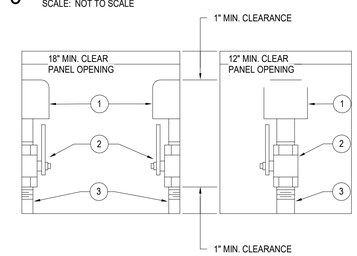


| DETAIL NOTES BY SYMBOL: | |
|---|---|
| 1 | WATER HAMMER ARRESTOR **. |
| 2 | BALL VALVE, SAME NOMINAL SIZE AS PIPE BRANCH IN CHASE. OPENING IN BALL VALVE TO MATCH PIPE I.D. |
| 3 | PIPE SAME SIZE AS BRANCH IN CHASE TO WHICH IT IS ATTACHED. |

NOTE:
1. PROVIDE REDUCER IF REQUIRED BETWEEN VALVE AND WATER HAMMER ARRESTOR..

2 WATER HAMMER PANEL INSTALLATION
SCALE: NOT TO SCALE

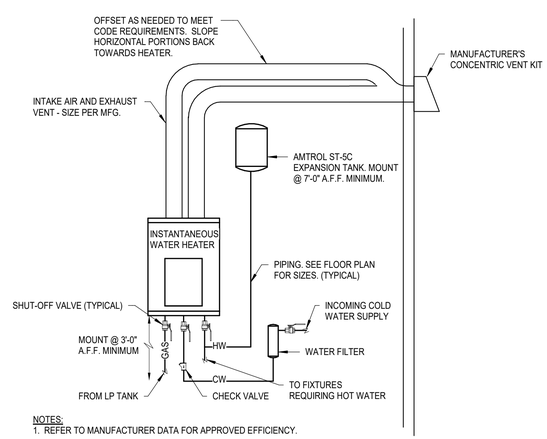


NOTES:
1. REFER TO MANUFACTURER DATA FOR APPROVED EFFICIENCY.
2. MANUFACTURER TO PROVIDE TEMPERATURE CONTROLS WITH A SET POINT OF 110 DEG. F.

4 INSTANTANEOUS WATER HEATER DETAIL
SCALE: NOT TO SCALE

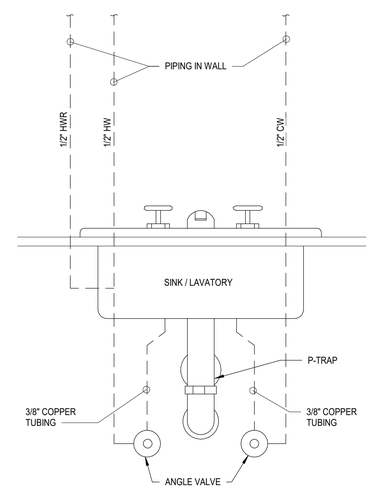


1 TYPICAL SINK-LAV PIPING DIAGRAM
SCALE: NOT TO SCALE

# EISENHOWER STATE PARK
**RESTROOM REPLACEMENT**
PROJECT NUMBER: 1210136

DATE: 21-01-22
DESIGNED BY: ML
DRAWN BY: ML
REVIEWED BY: CS
REVISED:
REVISED:
REVISED:

**SHEET TITLE**
PLUMBING DETAILS

SHEET NUMBER
**P302**

B&H Engineers, Inc
511 E John Carpenter Fwy
Suite 250
Irving, TX 75062
www.BandHEngineers.com
Registration No. 9102

TEXAS PARKS & WILDLIFE

GSBS ARCHITECTS
7291 GLENVIEW DRIVE
FORT WORTH, TX 76180
817.335.1722
GSBSARCHITECTS.COM

STATE OF TEXAS
CHRISTOPHER D. SIMS
119237
LICENSED
PROFESSIONAL ENGINEER

21-01-22

# EISENHOWER STATE PARK

**RESTROOM REPLACEMENT**

PROJECT NUMBER: 1210136

| PROPANE EQUIPMENT SCHEDULE | | | |
|---|---|---|---|
| EQUIPMENT NUMBER | DESCRIPTION | TOTAL BTU PER HOUR | TOTAL CFH |
| GWH-1 | PROPANE WATER HEATER | 380,000 | 380 |
| GWH-2 | PROPANE WATER HEATER | 380,000 | 380 |
| GWH-3 | PROPANE WATER HEATER | 380,000 | 380 |
| RH-1 | PROPANE RADIANT HEATER | 40,000 | 40 |
| RH-2 | PROPANE RADIANT HEATER | 40,000 | 40 |
| RH-5 | PROPANE RADIANT HEATER | 40,000 | 40 |
| RH-6 | PROPANE RADIANT HEATER | 40,000 | 40 |
| | | | |
| | | | |
| TOTALS | | 1,300,000 | 1,300 |

| PLUMBING ROUGH-IN SCHEDULE | | | | | | |
|---|---|---|---|---|---|---|
| | | ROUGH-IN MINIMUMS | | | | |
| ITEM NO. | DESCRIPTION | WASTE | VENT | HW | CW | REMARKS |
| WC-1 | WATER CLOSET | 4" | 2" | - | 1" | FV. |
| WC-2 | WATER CLOSET | 4" | 2" | - | 1" | FV. T.A.S. |
| U-1 | URINAL | 2" | 2" | - | 3/4" | FV. |
| L-1 | LAVATORY | 2" | 2" | 1/2" | 1/2" | COUNTER MNT. |
| L-2 | LAVATORY | 2" | 2" | 1/2" | 1/2" | COUNTER MNT. T.A.S. |
| EWC-1 | ELEC. WATER COOLER | 2" | 2" | - | 1/2" | HI/LO FOUNTAIN T.A.S. |
| DCVA | DOUBLE CHECK VALVE ASSEMBLY | - | - | - | 2" | - |
| HB-1/FPHB-1 | HOSE BIBB | - | - | - | 3/4" | - |
| MS-1 | MOP SINK | 3" | 2" | 3/4" | 3/4" | - |
| SH-1 | SHOWER | 2" | 2" | 3/4" | 3/4" | - |
| SH-2 | SHOWER | 2" | 2" | 3/4" | 3/4" | - |
| WF | WATER FILTER | - | - | - | 1" | - |
| BV | BALL VALVE | - | - | - | SEE NOTE 1 | - |
| FCO | FLOOR CLEANOUT | SEE NOTE 1 | SEE NOTE 1 | - | - | - |
| FD | FLOOR DRAIN | SEE NOTE 1 | SEE NOTE 1 | - | - | FINISHED AREAS |
| GCO | GROUND CLEANOUT | SEE NOTE 1 | SEE NOTE 1 | - | - | - |
| WCO | WALL CLEANOUT | SEE NOTE 1 | SEE NOTE 1 | - | - | - |
| FCO | FLOOR CLEANOUT | SEE NOTE 1 | SEE NOTE 1 | SEE NOTE 1 | SEE NOTE 1 | - |

NOTE:
1. SEE PLAN DRAWING FOR SIZE.

| SHOCK ARRESTOR SCHEDULE | | | |
|---|---|---|---|
| CATALOG NUMBER | FIXTURE UNITS | PIPE SIZE | LENGTH |
| 5 | 1-11 | 3/4" | 2-1/8" |
| 10 | 12-32 | 1" | 4" |
| | | | |

| PROPANE WATER HEATER SCHEDULE | | | | | | | |
|---|---|---|---|---|---|---|---|
| | GAS INPUT | | | | | | |
| ITEM NO. | MAXIMUM (BTU/H) | MINIMUM (BTU/H) | THERMAL EFFICIENCY | V | PH | MFR | MODEL |
| GWH-1 | 380,000 | 15,000 | 82% | 120 | 1 | AO SMITH | ATIO-910-AP |
| GWH-2 | 380,000 | 15,000 | 82% | 120 | 1 | AO SMITH | ATIO-910-AP |
| GWH-3 | 380,000 | 15,000 | 82% | 120 | 1 | AO SMITH | ATIO-910-AP |

NOTES:
1) PROVIDE GWH-1, GWH-2, AND GWH-3 WITH MANUFACTURER'S WALL CONCENTRIC VENT KIT.
2) WATER HEATERS ARE TO BE SET AT 120° F MINIMUM.

| THERMO. MIXING VALVE SCHEDULE | | | | | | | | | |
|---|---|---|---|---|---|---|---|---|---|
| ITEM NO. | TEMP IN °F | TEMP OUT °F | MIN. FLOW (GPM) | MAX FLOW (GPM) | VALVE FINISH | THERMOMETER | UNION CONN. | PRESS DIFF. | MFR / MODEL |
| TMV-1 | 120 | 105 | 0.5 | 12 | RB | No | Yes | 5.0 | WATTS #LFMMV |

NOTE:
TMV-1 IS LOCATED AT ALL SINKS AND LAVATORIES. ONE TMV MAY SERVE TWO RESTROOOM LAVATORIES

DATE: 21-01-22
DESIGNED BY: ML
DRAWN BY: ML
REVIEWED BY: CS
REVISED:
REVISED:
REVISED:

**SHEET TITLE**
PLUMBING EQUIPMENT SCHEDULES

SHEET NUMBER
**P401**

# PLUMBING FIXTURE SCHEDULE

| TYPE | FIXTURE DESCRIPTION | CARRIER | FLUSH VALVE | ROUGH-INS | NOTES |
|---|---|---|---|---|---|
| WC-1 | WATER CLOSET, WALL MOUNTED, WHITE VITREOUS CHINA, 1.28 GALLON PER FLUSH SIPHON JET ACTION, ELONGATED BOWL, PROVIDE WITH ELONGATED OPEN FRONT WHITE PLASTIC SEAT WITH SELF-SUSTAINING CHECK HINGES MODEL CHURCH #9500C, WITH 1-1/2" TOP SPUD AND BOLT CORNERS. AMERICAN STANDARD "AFWALL" #3351.101. | SMITH 0211 | 1.28 GAL. HARDWIRED (24VAC) FLUSH, EXPOSED, DIAPHRAGM TYPE, POLISHED CHROME FINISH CLOSET FLUSHOMETER. VACUUM BREAKER, SPUD COUPLING FOR 1-1/2" TOP SPUD. SLOAN ROYAL #111 ESS-1.28-TMO. | 4" WASTE, 2" VENT, 1" CW | MOUNT FLUSH VALVE OPERATING BUTTON ON ACCESSIBLE SIDE. |
| WC-2 (T.A.S.) | WATER CLOSET, WALL MOUNTED, WHITE VITREOUS CHINA, A.D.A./T.A.S. HEIGHT, 1.28 GALLONS PER FLUSH PER FLUSH SIPHON JET ACTION, ELONGATED BOWL, PROVIDE WITH ELONGATED OPEN FRONT WHITE PLASTIC SEAT WITH SELF SUSTAINING CHECK HINGES MODEL CHURCH #9500C, WITH 1-1/2" NPT FLUSH VALVE CONNECTION AND A GASKETED WASTE OUTLET. AMERICAN STANDARD "AFWALL" #3351.101. | SMITH 0211 | 1.28 GAL. HARDWIRED (24 VAC) FLUSH, EXPOSED, DIAPHRAGM TYPE, POLISHED CHROME FINISH CLOSET FLUSHOMETER. VACUUM BREAKER, SPUD COUPLING FOR 1-1/2" TOP SPUD. SLOAN ROYAL #111 ESS-1.28-TMO. | 4" WASTE, 2" VENT, 1" CW | MOUNT FLUSH VALVE OPERATING BUTTON ON ACCESSIBLE SIDE. |

| TYPE | FIXTURE DESCRIPTION | CARRIER | FLUSH VALVE | ROUGH-INS | NOTES |
|---|---|---|---|---|---|
| U-1 | URINAL, WALL HUNG, WHITE VITREOUS CHINA, 0.5 GALLON PER FLUSH SIPHON JET ACTION, INTEGRAL TRAP. AMERICAN STANDARD "WASHBROOK" #6590.005. MOUNT SO THAT RIM OF BASIN IS 14" MAX AFF TO MEET T.A.S. REQUIREMENTS. | RECTANGULAR STEEL TUBING UPRIGHTS WITH WELDED 4" SQUARE BASE ANCHORED TO CONCRETE WITH (4) 1/2" BOLTS, ADJUSTABLE SLEEVE, UPPER AND LOWER BEARING PLATES WITH THREADED STUDS. WADE #W400-AM11-M21. | 0.125 GALLON FLUSH CYCLE. HARDWIRED (24 VAC), EXPOSED, DIAPHRAGM TYPE, POLISHED CHROME FINISH URINAL FLUSHOMETER. VACUUM BREAKER, SPUD COUPLING FOR 3/4" TOP SPUD. SLOAN ROYAL #186 ESS-0.125-MO-HW. | 2" WASTE, 2" VENT, 3/4" CW | VERIFY ALL HEIGHT REQUIREMENTS WITH ARCHITECTURAL DRAWINGS. |

| TYPE | FIXTURE DESCRIPTION | FAUCET | STRAINER | P-TRAP | SUPPLIES | CARRIER | ROUGH-INS | NOTES |
|---|---|---|---|---|---|---|---|---|
| L-1 (T.A.S.) | LAVATORY, COUNTER MOUNTED, VITREOUS CHINA, 18"x12"x6-7/16" RECTANGULAR BOWL WITH FRONT OVERFLOW, AMERICAN STANDARD STUDIO UNDER COUNTER SINKS, UNGLAZED RIM, MODEL 0614.000 | METERING FAUCET SHALL FEATURE A SINGLE HANDLE VANDAL-RESISTANT BRASS CONSTRUCTION WITH A REPLACEABLE VALVE CARTRIDGE AND AN ADJUSTABLE FLOW CYCLE. SHALL ALSO FEATURE A WATER-CONSERVING, PRESSURE COMPENSATING 0.5 GPM/1.9 L MIN VANDAL-RESISTANT NON-AERATED SPRAY. FACTORY SET TO DELIVER 0.083 GALLONS PER CYCLE TO MEET CALGREEN. AMERICAN STANDARD MODEL # 1340.119 OR EQUAL. | 1-1/4" 17 GAUGE OFFSET WHEELCHAIR STRAINER, CHROME PLATED BRASS GRID DRAIN WITH ELBOW AND 17 GAUGE OFFSET TAILPIECE. MCGUIRE #155WC. | 1-1/4" 17 GAUGE CHROME PLATED HEAVY CAST BRASS TRAP WITH CLEANOUT AND EXTENSION TO WALL WITH ESCUTCHEON PLATE. MCGUIRE #8872. | 1/2" I.P.S. X 3/8" O.D.CHROME PLATED LOOSE KEY STOP VALVE WITH ESCUTCHEON AND 3/8" COMPRESSION CHROME PLATED FLEXIBLE RISER. MCGUIRE #2165LK. | | 2" WASTE, 2" VENT, 1/2" HOT & COLD WATER | VERIFY ALL HEIGHT REQUIREMENTS WITH ARCHITECTURAL DRAWINGS. |
| L-2 (T.A.S.) | LAVATORY, WALL HUNG, VITREOUS CHINA, 20-1/2" X 18-1/4" WITH FRONT OVERFLOW AND CONCEALED ARM SUPPORTS, SINGLE HOLE DECK. HEIGHT OF LAVATORY SHALL MEET T.A.S. REQUIREMENTS. AMERICAN STANDARD "LUCERNE" #0356.421.. | SINGLE HOLE, SELF CLOSING METERING FAUCET, PUSH BUTTON HANDLE, VANDLE RESISTANT SOFTFLO AERATOR, 5" CHROME PLATED BRASS SPOUT. 0.5 GOM MAX FLOW RATE. T&S BRASS MODEL #B0805. | 1-1/4" 17 GAUGE OFFSET WHEELCHAIR STRAINER, CHROME PLATED BRASS GRID DRAIN WITH ELBOW AND 17 GAUGE OFFSET TAILPIECE. MCGUIRE #155WC. | 1-1/4" 17 GAUGE CHROME PLATED HEAVY CAST BRASS TRAP WITH CLEANOUT AND EXTENSION TO WALL WITH ESCUTCHEON PLATE. MCGUIRE #8872. | 1/2" I.P.S. X 3/8" O.D.CHROME PLATED LOOSE KEY STOP VALVE WITH ESCUTCHEON AND 3/8" COMPRESSION CHROME PLATED FLEXIBLE RISER. MCGUIRE 2165LK. | WADE #400 SERIES | 2" WASTE, 2" VENT, 1/2" HOT & COLD WATER | VERIFY ALL HEIGHT REQUIREMENTS WITH ARCHITECTURAL DRAWINGS. |

| TYPE | FIXTURE DESCRIPTION | P-TRAP | SUPPLIES | ROUGH-INS | CARRIER |
|---|---|---|---|---|---|
| EWC-1 | SURFACE, DOUBLE HEIGHT, STAINLESS STEEL ELECTRIC WATER COOLER, SURFACE MOUNTING PLATE, VANDAL RESISTANT BUBBLERS, AUTOMATIC STREAM HEIGHT REGULATORS, AND BOTTLE FILLER STATION. ELKAY #VRCTLDDWSK. | 1-1/4" CHROME PLATED CAST BRASS TRAP WITH CLEANOUT AND EXTENSION TO WALL WITH ESCUTCHEON. MCGUIRE #8872. | 1/2" X 3/8" CHROME PLATED LOOSE KEY STOP VALVE. WITH ESCUTCHEON AND 3/8" CHROME PLATED FLEXIBLE RISER. MCGUIRE#2165LK. | 2" WASTE, 2" VENT, 1/2" COLD WATER. REFER TO ARCHITECTURAL DRAWINGS FOR HEIGHT REQUIREMENTS. | WADE #400 SERIES |

| TYPE | FIXTURE DESCRIPTION | ROUGH-INS |
|---|---|---|
| DCVA | LEAD FREE DOUBLE CHECK VALVE ASSEMBLY WITH STRAINER, WATTS MODEL #LF007M1QT-S. | 2" CW |
| HB-1/FPHB-1 | HOSE BIBB, WITH TAMPER-PROOF VACUUM BREAKER. INTERIOR - WATTS #SC8-4. EXTERIOR - WATTS #HY420-12. | 3/4" CW |
| MS-1 | 24" X 24" X 12" TERRAZO MOP SINK, 12" HIGH WALLS WITH NOT LESS THAN 1" WIDE SHOULDERS. FACTORY-INSTALLED DRAIN STAINLESS STEEL AND DESIGNED TO PROVIDE FOR A LEAD CAULK - ACORN MODEL #TSH-24. FAUCET FIAT MODEL #830-AA. HOSE AND HOSE BRACKET - FIAT MODEL #832-AA. MOP HANGER - FIAT MODEL #889-CC. | 3" WASTE, 2" VENT, 3/4" HOT AND COLD WATER. |
| SH-1 | SHOWER-WARE ZENITH BUILT-IN SHOWER. ACORN #538 | 3" WASTE, 2" VENT, 3/4" CW, 3/4" HW |
| SH-2 | WILLOUGHBY WALL SHOWER, FRONT MOUNTED, RECESSED SHOWER PANEL. PROVIDE ADJUSTABLE SHOWER HEAD - ADA COMPLIANT. WILLOUGHBY #WRS-FA-ADA-WH-R-PBV-DV-2.0-APS-FX-RD | 3" WASTE, 2" VENT, 3/4" CW, 3/4" HW |
| WF | WHOLE HOUSE HEAVY DUTY FILTER CARTRIDGE, PLEATED POLYESTER. AMERICAN PLUMBER MODEL #W50PEHD. | 1" CW |

| TYPE | FIXTURE DESCRIPTION | ROUGH-INS |
|---|---|---|
| BV | LEAD-FREE, STANDARD PORT, COPPER SILICON BALL VALVE. WATTS #LFB6000 | REFER TO PLANS |
| FCO | FLOOR CLEANOUT, CAST IRON WITH THREADED ADJUSTABLE HOUSING, FERRULE WITH PLUG AND SATIN NICKEL BRONZE SECURED SCORIATED COVER. WATTS #CO-200-R. | REFER TO PLANS |
| FD | FLOOR DRAIN FOR TOILET ROOMS, AND GENERAL AREAS. CAST IRON BODY FLOOR DRAIN WITH 6" STANDARD SATIN NICKEL BRONZE ADJUSTABLE STRAINER, INTEGRAL CLAMPING DEVICE, BOTTOM OUTLET, AND PROVIDE WITH PROVENT TRAPGUARD OR EQUAL. WATTS #FD-1100-A6 | REFER TO PLANS |
| GCO | GROUND CLEANOUT, CAST IRON CLEANOUT WITH THREADED ADJUSTABLE HOUSING, FERRULE WITH PLUG, TRACTOR TOP AND VANDAL PROOF. WATTS #CO-200-RX-4. | REFER TO PLANS |
| WCO | WALL CLEANOUT, CAST IRON FERRULE WITH TAPERED BRONZE COUNTERSUNK PLUG WADE #W-8550-D AND 9" SQUARE STAINLESS STEEL SECURED SMOOTH ACCESS COVER WITH NICKEL BRONZE FRAME. WATTS #CO-300-S | REFER TO PLANS |

* ALL LAVATORIES AND SINKS SHALL BE SUPPLIED WITH HOT AND COLD WATER TO FAUCETS AS INDICATED ON PLANS AND FIXTURE SCHEDULE. PROVIDE CHROME PLATED BRASS SUPPLY STOPS WITH LOOSE KEYS AND WALL ESCUTCHEONS. PROVIDE BRAIDED STAINLESS STEEL RISER HOSES OF SIZE REQUIRED TO PROPERLY CONNECT FIXTURES. PROVIDE 17 GAUGE CHROME PLATED CAST BRASS P-TRAP WITH CLEANOUT AND EXTENSION TO WALL WITH ESCUTCHEON.

* PROVIDE MCGUIRE "PROWRAP" INSULATION KITS ON ALL LAVATORIES AND SINKS REQUIRED TO BE T.A.S. ACCESSIBLE. ALL FIXTURES SHALL COMPLY WITH THE STATE ACCESSIBILITY STANDARDS REQUIRE


B&H Engineers, Inc
511 E John Carpenter Fwy
Suite 250
Irving, TX 75062
www.BandHEngineers.com
Registration No. 9102


TEXAS PARKS & WILDLIFE


GSBS ARCHITECTS
7291 GLEVIEW DRIVE
FORT WORTH, TX 76180
P 817.385.1722
GSBSARCHITECTS.COM


STATE OF TEXAS
CHRISTOPHER D. SMITH
119237
LICENSED PROFESSIONAL ENGINEER

21-01-22

# EISENHOWER STATE PARK

**RESTROOM REPLACEMENT**

PROJECT NUMBER: 1210136

DATE: 21-01-22
DESIGNED BY: ML
DRAWN BY: ML
REVIEWED BY: CS
REVISED:
REVISED:
REVISED:

**SHEET TITLE**
PLUMBING EQUIPMENT SCHEDULES

SHEET NUMBER
**P402**

B&H Engineers, Inc
511 E John Carpenter Fwy
Suite 250
Irving, TX 75062
www.BandHEngineers.com
Registration No. 9102

TEXAS PARKS & WILDLIFE

GSBS ARCHITECTS
7291 GLEVIEW DRIVE
FORT WORTH, TX 76180
817.589.1722
GSBSARCHITECTS.COM

STATE OF TEXAS
CHRISTOPHER D. SIMS
119237
LICENSED PROFESSIONAL ENGINEER

21-01-22

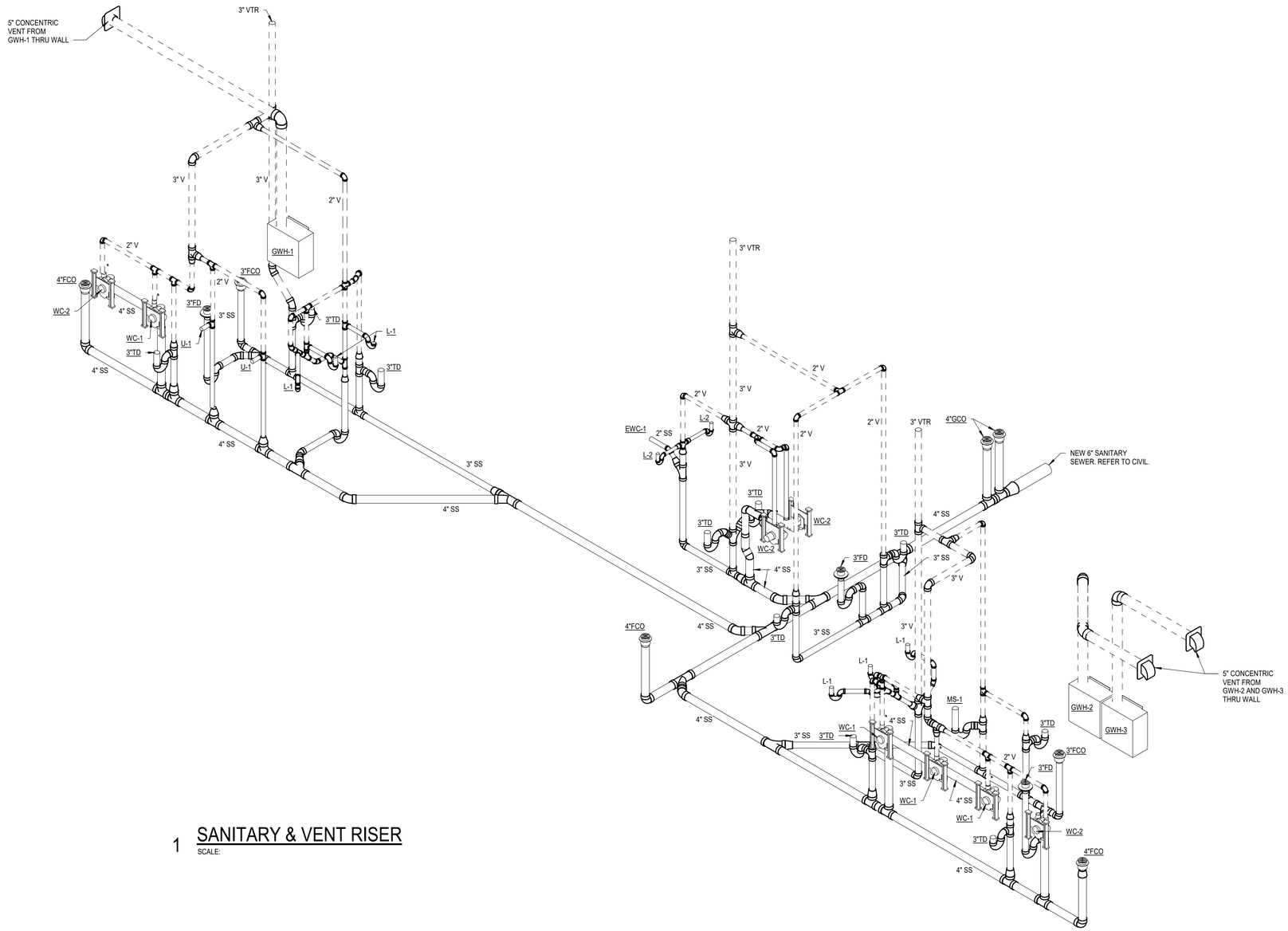


1 SANITARY & VENT RISER
SCALE:

# EISENHOWER STATE PARK

**RESTROOM REPLACEMENT**

PROJECT NUMBER: 1210136

DATE: 21-01-22
DESIGNED BY: ML
DRAWN BY: ML
REVIEWED BY: CS
REVISED:
REVISED:
REVISED:

**SHEET TITLE**
PLUMBING
SANITARY
RISER

SHEET NUMBER

**P601**

B&H Engineers, Inc
511 E John Carpenter Fwy
Suite 250
Irving, TX 75062
www.BandHEngineers.com
Registration No. 9102

TEXAS PARKS & WILDLIFE

GSBS ARCHITECTS
7291 GLEVIEW DRIVE
FORT WORTH, TX 76180
817.589.1722
GSBSARCHITECTS.COM

STATE OF TEXAS
CHRISTOPHER D. SIMS
119237
LICENSED
PROFESSIONAL ENGINEER

21-01-22

# EISENHOWER STATE PARK

**RESTROOM REPLACEMENT**

PROJECT NUMBER: 1210136

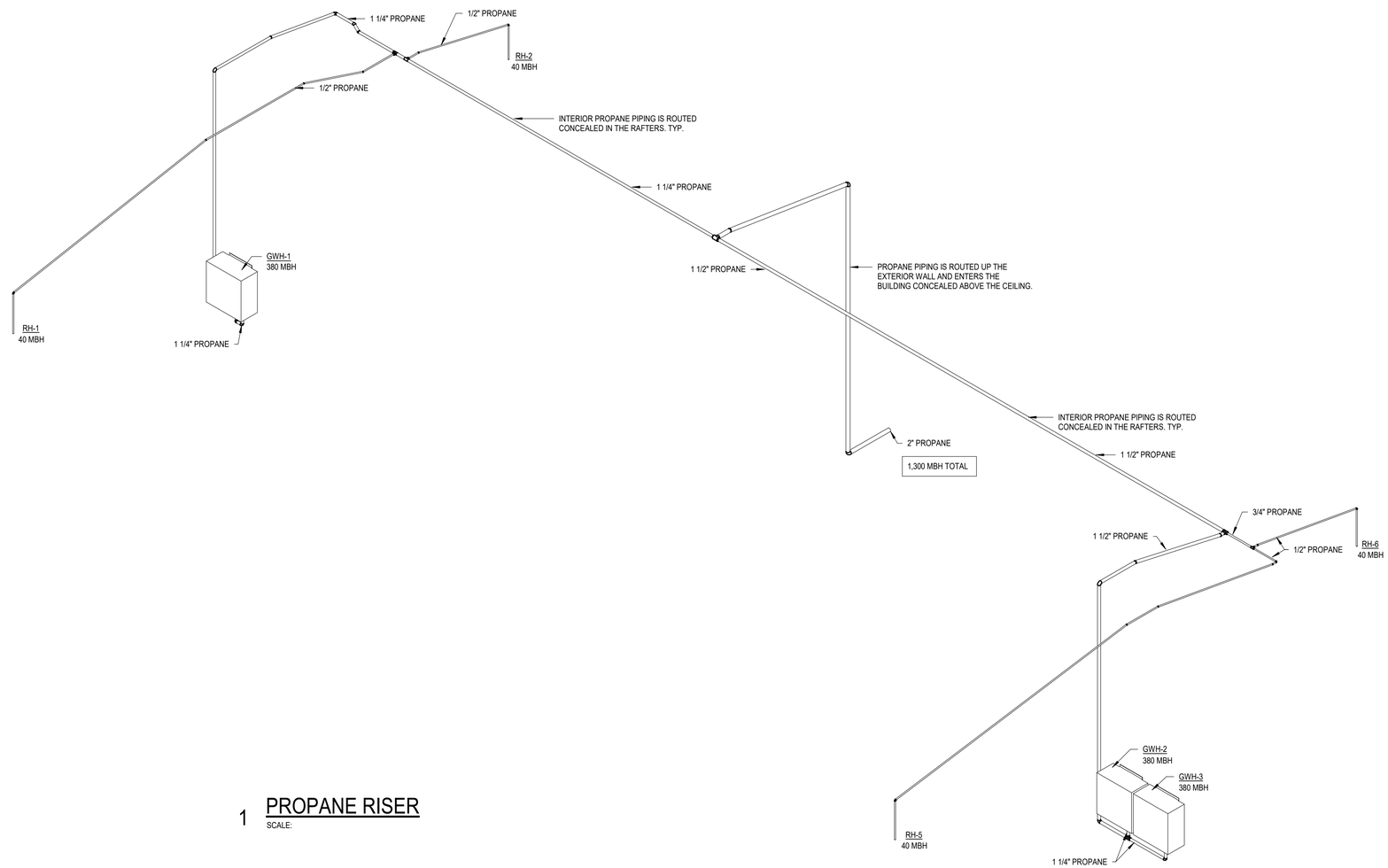


1 PROPANE RISER

SCALE:

DATE: 21-01-22
DESIGNED BY: ML
DRAWN BY: ML
REVIEWED BY: CS
REVISED:
REVISED:
REVISED:

**SHEET TITLE**
PLUMBING PROPANE RISER

SHEET NUMBER
**P602**

# ELECTRICAL ABBREVIATIONS, SYMBOLS, AND NOTES

## ABBREVIATIONS

| | |
|---|---|
| AC | ALTERNATING CURRENT |
| ADO | AUTOMATIC DOOR OPENER |
| AF | AMPERE FRAME |
| AFC | ABOVE FINISHED COUNTER |
| AFF | ABOVE FINISHED FLOOR |
| AT | AMPERE TRIP |
| ATS | AUTOMATIC TRANSFER SWITCH |
| C | CONDUIT |
| CB,C/B,CKT BKR | CIRCUIT BREAKER |
| CKT | CIRCUIT |
| CCTV | CLOSED CIRCUIT T.V. |
| CLG | CEILING |
| D | DEMOLITION |
| DB | DIRECT BURIAL |
| DC | DIRECT CURRENT |
| DP | DISTRIBUTION PANEL |
| EG | EQUIPMENT GROUND |
| ELEC | ELECTRIC |
| EMERG | EMERGENCY |
| EP | EXPLOSION PROOF |
| EWC | ELECTRIC WATER COOLER |
| EX | EXISTING |
| FA | FIRE ALARM |
| FAAP | FIRE ALARM ANUNCIATOR PANEL |
| FACP | FIRE ALARM CONTROL PANEL |
| FCU | FAN COIL UNIT |
| FIXT | FIXTURE |
| FLA | FULL LOAD AMPS |
| FLR | FLOOR |
| FLUOR | FLUORESCENT |
| FSS | FUSED SAFETY SWITCH |
| FTU | FAN TERMINAL UNIT |
| G,GND | GROUND |
| GEN | GENERATOR |
| GFI/GFCI | GROUND FAULT INTERRUPTER |
| HH | HANDHOLE |
| HP | HORSE POWER |
| HV | HIGH VOLTAGE |
| IG | ISOLATED GROUND |
| INCAND | INCANDESCENT |
| JB | JUNCTION BOX |
| LTS | LIGHTS |
| LTG | LIGHTING |
| LV | LOW VOLTAGE |
| MCA | MINIMUM CIRCUIT AMPS |
| MCB | MAIN CIRCUIT BREAKER |
| MCC | MOTOR CONTROL CENTER |
| MDP | MAIN DISTRIBUTION PANEL |
| MH | MANHOLE |
| MLO | MAIN LUGS ONLY |
| MTD | MOUNTED |
| MTG HGT | MOUNTING HEIGHT |
| NF | NON-FUSED |
| OHE | OVERHEAD ELECTRIC LINE |
| P | POLE |
| PH | PHASE |
| PB | PULL BOX |
| PNL | PANEL |
| POD | POWER OPERATED DAMPER |
| PWR | POWER |
| RECEPT,RCPT | RECEPTACLE |
| SIG | SIGNAL |
| SS | SAFETY SWITCH |
| TEL | TELEPHONE |
| TR | TAMPER RESISTANT |
| TV | TELEVISION |
| UH | UNIT HEATER |
| UE | UNDERGROUND ELECTRIC LINE |
| V | VOLTAGE |
| VP | VAPOR PROOF |
| W | WIRE |
| W/ | WITH |
| WP | WEATHER PROOF |
| WR | WEATHER RESISTANT |
| XFMR | TRANSFORMER |

NOTE: NOT ALL SYMBOLS MAY BE USED.

## LIGHT FIXTURES

- 4' PENDANT LIGHT FIXTURE
- SUSPENDED DOWN LIGHT
- WALL MOUNTED LIGHT FIXTURE
- EMERGENCY WALL PACK
- EXTERIOR LIGHT-POLE MOUNTED
- SINGLE SIDED EXIT SIGN W/ARROW
- DOUBLE SIDED EXIT SIGN W/ARROWS

## LIGHT FIXTURE LABELING

A 12

- UPPERCASE LETTER - INDICATES FIXTURE TYPE, REFER TO FIXTURE SCHEDULE
- NUMBER INDICATES CIRCUIT

## OUTLETS & RECEPTACLES

- DUPLEX RECEPTACLE
- QUADRAPLEX RECEPTACLE
- JUNCTION BOX

## WIRING

- HOMERUN
- NEUTRAL WIRE (SHORT STROKE)
- PHASE OR SWITHED WIRE (LONG STROKE)
- GROUND WIRE (FILLED CIRCLE)
- ISOLATED GROUND WIRE (OPEN CIRCLE)
- GROUND

## TRANSFORMERS & PANELS

- PANEL BOARD

## SWITCHES & MISC.

- SWITCH (LINE VOLTAGE U.N.O.)
- $_M$ MOTOR SWITCH
- $_{OS}$ WALL MOUNTED OCCUPANCY SENSOR
- NON-FUSED DISCONNECT SWITCH
- CEILING MOUNTED OCCUPANCY SENSOR - COMBINATION TYPE
- P SURFACE MOUNTED PHOTOCELL

## GENERAL NOTES

GENERAL CONDITIONS

1. THE DRAWINGS ARE GENERALLY DIAGRAMMATIC AND IT IS THE INTENT AND MEANING OF THE CONTRACT DOCUMENTS THAT THE CONTRACTOR SHALL PROVIDE AN ELECTRICAL INSTALLATION THAT IS COMPLETE AND ALL ITEMS AND APPURTENANCES NECESSARY, REASONABLE INCIDENTAL, OR CUSTOMARILY INCLUDED, EVEN THOUGH EACH AND EVERY ITEM IS NOT SPECIFICALLY CALLED OUT OR SHOWN. THE CONTRACTOR SHALL PROVIDE ALL EQUIPMENT, MATERIALS, LABOR, SUPERVISION AND SERVICE NECESSARY SO AS TO PROVIDE A COMPLETE, FUNCTIONING ELECTRICAL SYSTEM IN SAFE WORKING ORDER.
2. SYMBOLS FOR VARIOUS ELEMENTS AND SYSTEMS ARE SHOWN ON THE DRAWINGS. SHOULD THERE BE ANY DOUBT REGARDING THE MEANING OR INTENT OF THE SYMBOLS USED, AN INTERPRETATION SHALL BE OBTAINED FROM THE ARCHITECT IN WRITING. THE DECISION OF THE ARCHITECT SHALL BE FINAL.
3. IT SHALL BE THE RESPONSIBILITY OF EACH CONTRACTOR TO EXAMINE THE CONTRACT DOCUMENTS CAREFULLY BEFORE SUBMITTING HIS BID, WITH PARTICULAR ATTENTION TO ERRORS, OMISSIONS, CONFLICTS WITH PROVISIONS OF LAWS AND CODES HAVING JURISDICTION, CONFLICTS BETWEEN DRAWINGS OR DRAWINGS AND SPECIFICATIONS, AND AMBIGUOUS DEFINITION OF THE EXTENT OF COVERAGE BETWEEN CONTRACTS. ANY SUCH DISCREPANCY SHALL BE BROUGHT IMMEDIATELY TO THE ATTENTION OF THE ARCHITECT FOR CORRECTION. SHOULD ANY OF THESE ERRORS, OMISSIONS, CONFLICTS, OR AMBIGUITIES EXIST, THE CONTRACTOR SHALL HAVE THEM EXPLAINED AND ADJUSTED IN WRITING BEFORE SIGNING THE CONTRACT OR PROCEEDING WITH THE WORK; OTHERWISE, HE SHALL, AT HIS OWN EXPENSE, SUPPLY THE PROPER MATERIALS AND LABOR TO MAKE GOOD ANY DAMAGE OR DEFECTS IN HIS WORK OR THE RESULTS OBTAINED THEREFROM, CAUSED BY SUCH DISCREPANCY.
4. WHEREVER CONFLICTS OCCUR BETWEEN DIFFERENT PARTS OF THE CONTRACT DOCUMENTS, THE GREATER QUANTITY, THE BETTER QUALITY, OR LARGER SIZE SHALL PREVAIL UNLESS THE ARCHITECT INFORMS THE CONTRACTOR OTHERWISE IN WRITING.
5. THE SCALE OF EACH DRAWING IS RELATIVELY ACCURATE; ANY DIMENSIONS SHOWN ARE APPROXIMATE TO CENTERLINE FROM ASSUMED BUILDING PERIMETER. THE CONTRACTOR SHALL OBTAIN THE NECESSARY DIMENSIONS FOR ANY EXACT TAKEOFFS FROM THE ARCHITECT. NO ADDITIONAL COST TO THE OWNER WILL BE CONSIDERED FOR FAILURE TO OBTAIN EXACT DIMENSIONS WHERE NOT CLEAR OR IN ERROR ON THE DRAWINGS. ANY DEVICE OR FIXTURE ROUGHED IN IMPROPERLY AND NOT POSITIONED ON IMPLIED CENTER-LINES OR AS REQUIRED BY GOOD PRACTICE MUST BE REPOSITIONED AT NO COST TO THE OWNER.
6. ALL WORK AND MATERIALS SHALL BE GUARANTEED FREE FROM DEFECTS FOR A MINIMUM PERIOD OF ONE YEAR UNLESS NOTED OTHERWISE. THE WARRANTY PERIOD SHALL BEGIN AT THE DATE OF BENEFICIAL OCCUPANCY OF THE FACILITY.
7. THE GENERAL CONTRACTOR SHALL REQUIRE ALL RELATED INFORMATION FROM THEIR SUB-CONTRACTORS AND SUPPLIERS THAT WILL ALLOW THE GENERAL CONTRACTOR TO INCORPORATE ALL ELEMENTS AND WORK OF ALL TRADES INTO A FULLY COORDINATED AUTO-CAD DRAWING SECTION THROUGH AREAS OF DENSE MECHANICAL, ELECTRICAL, PLUMBING, AND FIRE PROTECTION SYSTEMS PRIOR TO THE FABRICATION OR INSTALLATION OF ANY WORK SO AS TO CONFIRM PROPER ACCESS TO ALL ELEMENTS FOR PROPER OPERATION AND MAINTENANCE SERVICE SPACE.
8. ONLY EXPERIENCED CRAFTSMEN KNOWLEDGEABLE IN THEIR RESPECTIVE TRADE SHALL PERFORM THE WORK DESCRIBED IN THE CONSTRUCTION DOCUMENTS.
9. ALL WORK SHALL BE DONE IN ACCORDANCE WITH THE 2020 EDITION OF THE NFPA STANDARD 70 (NATIONAL ELECTRICAL CODE). CONTRACTOR SHALL ALSO CONFORM TO ALL APPLICABLE LOCAL CODES AND AMENDMENTS.
10. ALL ELECTRICAL EQUIPMENT, INCLUDING BUT NOT LIMITED TO SWITCHGEAR, CONDUIT, WIRE, BOXES AND FITTINGS SHALL BE NEW AND SHALL MEET NEMA AND ANSI STANDARDS AND SHALL BEAR THE UL LABEL.
11. DURING RENOVATIONS PROJECTS, WHEN A CEILING IS OPENED UP, REMOVE ALL OBVIOUSLY ABANDONED WIRE, CABLE, AND CONDUIT AND CLOSE/PROVIDE COVER PLATES FOR ALL JUNCTION BOXES.

CONDUIT & RACEWAY

1. ALL WORK SHALL BE COORDINATED SO THAT INTERFERENCES ARE AVOIDED. PROVIDE ALL NECESSARY OFFSETS IN CONDUITS, RACEWAYS, ETC., REQUIRED TO PROPERLY INSTALL THE WORK. EXPOSED WORK MUST BE KEPT AS CLOSE AS POSSIBLE TO WALLS, CEILINGS, COLUMNS, ETC., SO AS TO TAKE UP MINIMUM AMOUNT OF SPACE; ALL OFFSETS, FITTINGS, ETC., REQUIRED SHALL BE PROVIDED WITHOUT ADDITIONAL EXPENSE TO THE OWNER. WORK SHALL BE COORDINATED WITH OTHER TRADES.
2. CONDUIT RUNS ARE DIAGRAMMATIC IN NATURE. CONTRACTOR IS RESPONSIBLE FOR SIZING AND LOCATING PULL BOXES PER N.E.C. AND FOR COORDINATION WITH OTHER DISCIPLINES.
3. INSTALL THERMOSTAT CABLING IN CONDUIT.
4. CONTRACTOR SHALL PROVIDE AND INSTALL ADEQUATE SUPPORTS NECESSARY FOR THE RACEWAY SYSTEM. THIS INCLUDES BUT IS NOT LIMITED TO BLOCKING FOR SURFACE AND FLUSH MOUNTED PANELS. CONTRACTOR SHALL REFER TO MANUFACTURER'S RECOMMENDATIONS FOR SIZES AND QUANTITIES OF ALL SUPPORTING MEANS.
5. PENETRATIONS OF WALLS, FLOORS, ROOFS, AND STRUCTURAL BEAMS FOR THE PASSAGE OF ELECTRICAL RACEWAYS SHALL BE APPROVED BY THE STRUCTURAL ENGINEER OF RECORD PRIOR TO THE COMMENCEMENT OF WORK. ALL SUCH PENETRATIONS SHALL BE PROPERLY SEALED OFF AFTER INSTALLATION OF RACEWAY SO AS TO MAINTAIN THE STRUCTURAL, WATER PROOF, AND FIRE PROOF INTEGRITY OF THE SYSTEM PENETRATED.
6. THE CONTRACTOR SHALL SEAL ALL CONDUITS THAT PENETRATE THE ANY FLOOR SLABS TO MAKE THEM WATER TIGHT. THE CONDUITS SHALL BE DRIED PRIOR TO INSTALLATION OF WIRE/CABLE AND SHALL BE SEALED AT TERMINATIONS.
7. ALL BOXES AND CONDUIT IN RESTROOM AREA WALLS AND CEILING SHALL BE FLUSH MOUNTED OR CONCEALED. ALL BOXES AND CONDUIT IN CHASE AREAS SHALL BE SURFACE MOUNTED.
8. USE COMPRESSION TYPE CONDUIT FITTINGS. SET-SCREW TYPE FITTINGS ARE NOT ALLOWED.

BRANCH CIRCUITS AND FEEDERS

1. UNLESS OTHERWISE NOTED, ALL CIRCUITS 100' OR LESS SHALL BE MINIMUM #12 AWG WIRE SIZE. CIRCUITS OVER 100' BUT LESS THAN 200' SHALL BE MINIMUM #10 AWG WIRE SIZE. CIRCUITS OVER 200' SHALL BE MINIMUM #8 AWG WIRE SIZE.
2. ALL CONDUCTORS SHALL BE SOFT DRAWN ANNEALED COPPER, 98% CONDUCTIVITY CONTINUOUS FROM OUTLET TO OUTLET. CONDUCTOR SIZES #12 AWG AND #10 AWG SHALL BE SOLID. CONDUCTOR SIZES #8 AWG AND LARGER MAY BE STRANDED.
3. A SEPARATE INSULATED EQUIPMENT GROUNDING CONDUCTOR SHALL BE PULLED WITH ALL CIRCUIT CONDUCTORS.
4. CONTRACTOR SHALL GROUND ALL EQUIPMENT AND ELECTRICAL SYSTEM PER N.E.C.
5. IN INSTANCES WHERE DEMOLITION IS REQUIRED, THE CONTRACTOR SHALL DISCONNECT AND REMOVE ALL UNUSED CONDUIT AND WIRING BACK TO THE ELECTRICAL PANEL.
6. SHARED NEUTRALS ARE NOT ALLOWED IN DEDICATED BRANCH CIRCUITS.

LIGHTING SYSTEM

1. REFER TO ARCHITECTURAL DRAWINGS AND SPECIFICATIONS FOR LOCATION OF ALL CEILING ELEMENTS (LIGHTS, SPRINKLERS, DIFFUSERS, ETC). ALL CEILING MOUNTED ITEMS SHALL BE INSTALLED IN ACCORDANCE WITH THE ARCHITECTURAL DIMENSIONED DRAWINGS. IF LOCATION FOR AN ITEM IS NOT SHOWN ON THE ARCHITECTURAL DRAWINGS, VERIFY THE EXACT LOCATION OF THE ITEM WITH THE ARCHITECT PRIOR TO INSTALLATION. THESE REQUIREMENTS APPLY TO ALL CEILING TYPES IN ALL AREAS. DO NOT SCALE OR DIMENSION LOCATIONS FROM THESE DRAWINGS.
2. CONTRACTOR SHALL PROVIDE AND INSTALL ALL SUPPORTS FOR LIGHT FIXTURES. SUPPORTS SHALL BE INDEPENDENT OF THE CEILING GRID SUPPORT SYSTEM.
3. LIGHT SWITCHES LOCATED IN A ROOM SHALL CONTROL ALL THE LIGHT FIXTURES IN THAT ROOM UNLESS NOTED OTHERWISE. ALL CEILING MOUNTED OCCUPANCY SENSORS SHOWN AS SOLE SOURCE OF CONTROL SHALL BE PROVIDED WITH MANUAL OVER-RIDE SWITCH ON WALL. COORDINATE LOCATION WITH ARCHITECT. CONTRACTOR SHALL GANG TOGETHER ALL SWITCHES UNDER A SINGLE COVER PLATE IN ALL AREAS THAT REQUIRE MORE THAN ONE SWITCH TO CONTROL ELECTRICAL DEVICES.
4. IN INSTANCES WHERE A TRACK LIGHTING SYSTEM, DIMMING SYSTEM, AND/OR LIGHTING CONTROL SYSTEM IS SPECIFIED, THE CONTRACTOR SHALL COORDINATE ALL NECESSARY COMPONENTS OF SUCH SYSTEM(S) WITH THE MANUFACTURER PRIOR TO BID AND INCLUDE ALL NECESSARY ACCESSORIES TO INSTALL A COMPLETE AND FUNCTIONING SYSTEM.
5. ALL LIGHT FIXTURES SHALL BE INSTALLED WITH APPROPRIATE LAMPS AS INDICATED. FIXTURES SHALL ALSO BE INSTALLED WITH BALLASTS WHERE NECESSARY.

OUTLETS AND POWER DEVICES

1. REFER TO ARCHITECTURAL DRAWINGS AND SPECIFICATIONS FOR LOCATION AND MOUNTING HEIGHT OF ALL WALL AND FLOOR MOUNTED ELEMENTS (OUTLETS, LIGHT SWITCHES, CONTROLLERS, POKE-THRU, ETC). ALL WALL/FLOOR MOUNTED ITEMS SHALL BE INSTALLED IN ACCORDANCE WITH THE ARCHITECTURAL DIMENSIONED DRAWINGS. IF LOCATION FOR AN ITEM IS NOT SHOWN ON THE ARCHITECTURAL DRAWINGS, VERIFY THE EXACT LOCATION OF THE ITEM WITH THE ARCHITECT PRIOR TO INSTALLATION. THESE REQUIREMENTS APPLY TO ALL WALL/FLOOR TYPES IN ALL AREAS. DO NOT SCALE OR DIMENSION LOCATIONS FROM THESE DRAWINGS.
2. CONTRACTOR SHALL COORDINATE THE LOCATION AND INSTALLATION DETAIL OF OUTLETS IN MILLWORK WITH ARCHITECTURAL DRAWINGS (WALL ELEVATIONS, MILLWORK DETAILS, ETC.) AND WITH MILLWORK MANUFACTURER PRIOR TO ELECTRICAL ROUGH-IN.
3. WALL AND FLOOR MOUNTED POWER RECEPTACLES SHOWN NEAR DATA OUTLETS SHALL BE LOCATED WITHIN SIX (6") INCHES OF THE DATA OUTLET. LOCATE AT SAME MOUNTING HEIGHT UNLESS NOTED OTHERWISE.
4. CONTRACTOR SHALL VERIFY THE EXACT POWER CONNECTION TYPE AND NEMA CONFIGURATION OF RECEPTACLES FOR EQUIPMENT FURNISHED BY THE OWNER, OTHER TRADES, OR UNDER A SEPARATE SECTION OF THIS CONTRACT PRIOR TO ELECTRICAL ROUGH-IN.
5. ELECTRICAL RECEPTACLES IN RESTROOMS AND CHASES SHALL BE MOUNTED AT 48" A.F.F UNLESS NOTED OTHERWISE ON THESE DRAWINGS OR ARCHITECTURAL DRAWINGS.
6. ALL RECEPTACLES WITHIN SIX FEET (6'-0") OF ANY PLUMBING FIXTURE AND/OR SINK SHALL BE EQUIPPED WITH GFCI FOR PERSONNEL PROTECTION.
7. ALL RECEPTACLES LOCATED OUTSIDE THE BUILDING ENVELOPE SHALL BE HOUSED IN ENCLOSURES THAT ARE RATED 'WEATHER-PROOF-WHILE-IN-USE' AND SHALL BE EQUIPPED WITH GFCI FOR PERSONNEL PROTECTION.
8. ALL GFCI RECEPTACLES SHALL BE CONNECTED SO THAT ALL DEVICES ON THE SAME CIRCUIT AS THE GFCI RECEPTACLE DO NOT DE-ENERGIZE UPON TRIPPING. ALL GFCI RECEPTACLES SHALL INCLUDE A LOCK-OUT FUNCTION TO PROTECT AGAINST THE USE OF MISWIRED DEVICES OR DEVICES THAT HAVE BEEN DAMAGED DUE TO DISABLING SURGES.
9. FINISH COLORS OF DEVICES AND CORRESPONDING COVER PLATES SHALL BE SELECTED AND APPROVED BY THE ARCHITECT. SPECIALTY RECEPTACLES AND COVERPLATES (I.E. ISOLATED GROUND, EMERGENCY, CRITICAL BRANCH, SURGE SUPPRESSION, ETC.) SHALL BE THE COLOR NOTED IN ELECTRICAL CONSTRUCTION DOCUMENTS.

MECHANICAL & PLUMBING COORDINATION

1. CONTRACTOR SHALL REFERENCE THE MECHANICAL AND PLUMBING DRAWINGS FOR ALL EQUIPMENT NEEDING ELECTRICAL CONNECTIONS. MAKE ALL CONNECTIONS AND PROVIDE APPROPRIATE WIRE, CONDUIT, AND OVERCURRENT PROTECTION FOR ALL EQUIPMENT.
2. ALL FUSED SWITCHED OR CIRCUIT BREAKERS SERVING EQUIPMENT SHALL HAVE HANDLE LOCKS.
3. ALL CIRCUIT BREAKERS SERVING MECHANICAL EQUIPMENT SHALL BEAR AN 'HACR' RATING.
4. CONTRACTOR SHALL COORDINATE BETWEEN TRADES AND PROVIDE CONTROL POWER FOR ALL VAV BOXES/DAMPERS/ETC, AS REQUIRED TO ENSURE A COMPLETE, FULLY FUNCTIONAL HVAC SYSTEM. PROVIDE POWER FROM NEAREST 120V GENERAL PURPOSE CIRCUIT OR FROM BUILDING CONTROL POWER DISTRIBUTION SYSTEM. CONTRACTOR SHALL REFERENCE MECHANICAL DRAWINGS AND COORDINATE WITH OTHER TRADES PRIOR TO ELECTRICAL ROUGH-IN.
5. CONTRACTOR SHALL COORDINATE MOTOR DISCONNECT AND CONTROL WITH MECHANICAL DRAWINGS AND BETWEEN TRADES. PROVIDE STARTERS AND DISCONNECTS FOR ALL MECHANICAL EQUIPMENT THAT IS NOT PROVIDED INTEGRAL TO THE EQUIPMENT. PROVIDE MOTOR STARTERS FOR ALL MOTORS 1 HP OR LARGER. COORDINATE STARTER REQUIREMENTS WITH BMCS CONTRACTOR WHO IS FURNISHING THE UNITARY CONTROLLER. PROVIDE MOTOR-RATED SWITCHES FOR ALL MOTORS LESS THAN 1 HP. PROVIDE ALL NECESSARY WIRE, CONDUIT AND POWER FOR INTERLOCKED MOTOR CONTROL.


B&H Engineers, Inc
511 E John Carpenter Fwy
Suite 250
Irving, TX 75062
www.BandHEngineers.com
Registration No. 9102


TEXAS PARKS & WILDLIFE


GSBS ARCHITECTS
7291 GLEVIEW DRIVE
FORT WORTH, TX 76180
P: 817.589.1722
GSBSARCHITECTS.COM


STATE OF TEXAS
XIAOBO WANG
125066
LICENSED
PROFESSIONAL ENGINEER
21-01-22

# EISENHOWER STATE PARK

**RESTROOM REPLACEMENT**

PROJECT NUMBER: 1210136

DATE: 21-01-22
DESIGNED BY: JS
DRAWN BY: JS
REVIEWED BY: XW
REVISED:
REVISED:
REVISED:

**SHEET TITLE**
ELECTRICAL COVER SHEET

SHEET NUMBER
**E001**

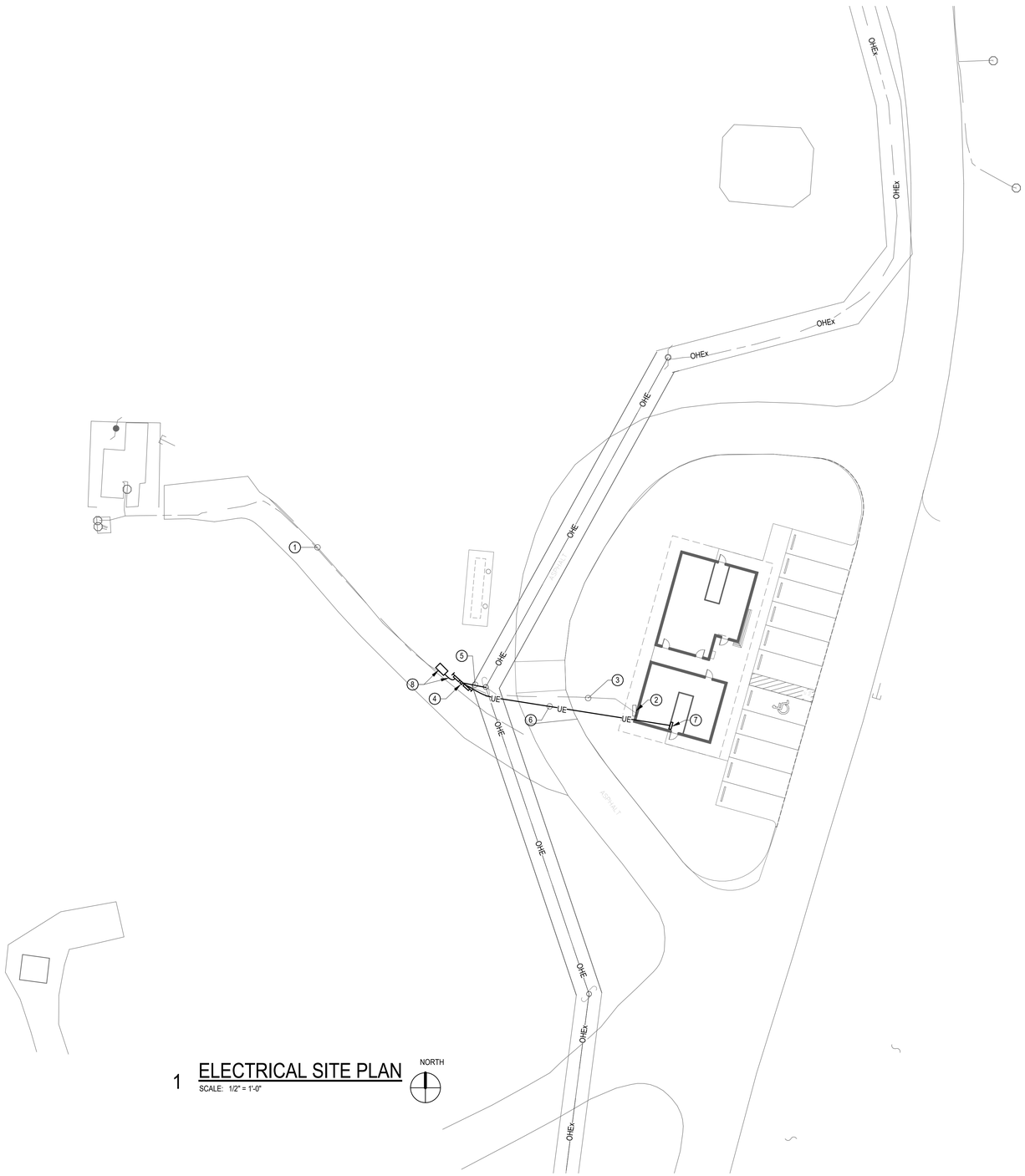


1 ELECTRICAL SITE PLAN

SCALE: 1/2" = 1'-0"

NORTH

## LEGEND

| | |
|---|---|
| —OHE— | RELOCATED PRIMARY OVERHEAD ELECTRIC LINE |
| —OHEx— | EXISTING OVERHEAD ELECTRIC LINE TO REMAIN |
| —UE— | UNDERGROUND ELECTRIC LINE |
| | DEMOLITION |

B&H Engineers, Inc
511 E John Carpenter Fwy
Suite 250
Irving, TX 75062
www.BandHEngineers.com
Registration No. 9102

TEXAS PARKS & WILDLIFE

## GENERAL NOTES:

1. PER THE ONCOR GENERAL REQUIREMENTS, THE UTILITY WILL PROVIDE THE POWER POLE, OVERHEAD WIRE, TRANSFORMERS, RISER, SECONDARY WIRE, AND METER. COORDINATE ALL SERVICE CONNECTIONS WITH ONCOR.

   **ONCOR CONTACT:**
   BAILEY BOWERS
   UTILITY DESIGNER
   ONCOR – PMDS
   TEXOMA DISTRICT
   2201 WOODLAKE RD.
   DENISON, TX 75021
   TEL: 903-436-2371

2. REFER TO RISER DIAGRAM FOR ADDITIONAL SERVICE DETAILING.
3. PROVIDE TEMPORARY FOR CONSTRUCTION AND CONSTRUCTION TRAILER.
4. TPWD TO PAY FOR ALL UTIITY FEES FOR PERMANENT POWER IN A SEPARATE CONTRACT.

## NOTES BY SYMBOL:

| | |
|---|---|
| 1 | EXISTING UNDERGROUND FEEDERS TO SEPTIC STATION TO REMAIN. |
| 2 | REMOVE EXISTING 200A SERVICE PANELBOARD, METER, AND UNISTRUT. |
| 3 | REMOVE EXISTING 80A CONDUCTORS (3)#4,#4G BACK TO NEW IN-GRADE PULLBOX. ABANDON EXISTING UNDERGROUND CONDUIT IN PLACE. |
| 4 | NEW STRUT-MOUNTED EXTERIOR SERVICE PANELS. PROVIDE NEW METER ENCLOSURE FOR ONCOR PROVIDED METER. REFER TO RISER DIAGRAM FOR MORE INFORMATION. |
| 5 | NEW UNDERGROUND SERVICE FEED FROM NEW ONCOR TRANSFORMERS TO NEW SERVICE PANEL. |
| 6 | NEW UNDERGROUND FEED FROM SERVICE PANEL TO LOAD CENTER. REFER TO RISER FOR SIZING. |
| 7 | NEW RESTROOM LOAD CENTER. REFER TO RISER FOR SIZING. |
| 8 | INTERCEPT EXISTING SEPTIC FEEDER AND PROVIDE NEW IN-GRADE 30"X18" POLYMER PULLBOX (OLDCASTLE FRP OR EQUIVALENT). PROVIDE UL-LISTED DIRECT BURIED POLARIS BLOCKS AND EXTEND (3)#4, #4G IN 1-1/2" CONDUIT TO PANEL P2. |

GSBS ARCHITECTS
7291 GLEVIEW DRIVE
FORT WORTH, TX 76180
P: 817.589.1722
GSBSARCHITECTS.COM

STATE OF TEXAS
XIAOBO WANG
125066
LICENSED
PROFESSIONAL ENGINEER

21-01-22

# EISENHOWER STATE PARK

**RESTROOM REPLACEMENT**

PROJECT NUMBER: 1210136

DATE: 21-01-22
DESIGNED BY: JS
DRAWN BY: JS
REVIEWED BY: XW
REVISED:
REVISED:
REVISED:

**SHEET TITLE**
ELECTRICAL PLAN - SITE

SHEET NUMBER

**E100**

## LIGHTING FIXTURE SCHEDULE

| TYPE | MANUFACTURER | DESCRIPTIOIN | MOUNTING | MODEL | LAMP | VOLTAGE | POWER | Comments |
|---|---|---|---|---|---|---|---|---|
| A | AXIS LIGHTING | SUSPENDED STRIP LIGHT | STEM | ARLED-1000-90-30-S-4-XX-120V-DP-1-SA(#) | LED | 120 V | 40 W | PROVIDE STEM LENGTHS TO KEEP FIXTURES LEVEL ACROSS RESTROOM |
| AE | AXIS LIGHTING | SUSPENDED STRIP LIGHT | STEM | ARLED-1000-90-30-S-4-XX-120V-DP-1-SA(#)+B1 | LED | 120 V | 40 W | PROVIDE STEM LENGTHS TO KEEP FIXTURES LEVEL ACROSS RESTROOM |
| B | Acuity Brands Lighting | CYLINDER DOWNLIGHT | STEM | LDN4CYL-30-07-LO4-AR-MVOLT-PM-WL | LED | 120 V | 9 W | PROVIDE STEM LENGTHS TO KEEP FIXTURES LEVEL ACROSS RESTROOM |
| CE | BEGA | EMERGENCY WALL CYLINDER | WALL | 66 655 + K27 | LED | 120 V | 8 W | |
| D | Acuity Brands Lighting | STRIP LIGHT | STEM | ZL1N-48"-3000LM-MVOLT-30K-80CRI | LED | 120 V | 25 W | PROVIDE STEM LENGTHS TO KEEP FIXTURES LEVEL ACROSS RESTROOM |
| X1 | Acuity Brands Lighting | EXIT SIGN, SURFACE MOUNT EDGE-LIT WHITE HOUSING WITH GREEN LETTERING, BATTERY BACKUP | WALL | EDG-W-1-G | LED | 120 V | 5 W | |
| X2 | Acuity Brands Lighting | EXIT SIGN, SURFACE MOUNT EDGE-LIT WHITE HOUSING WITH GREEN LETTERING, BATTERY BACKUP | WALL | EDG-W-2-G | LED | 120 V | 5 W | |

## LIGHTING GENERAL NOTES:

1. COORDINATE SUSPENDED FIXTURES HEIGHTS OF LIGHT FIXTURES WITH ARCHITECTURAL CEILING ELEVATIONS PRIOR TO ROUGH-IN.
2. COORDINATE LOCATION OF ALL LIGHTING CONTROL DEVICES WITH DOOR SWINGS AND MECHANICAL CONTROL DEVICES.
3. COORDINATE MOUNTING HEIGHTS OF EXTERIOR LIGHT FIXTURES WITH ARCHITECTURAL ELEVATIONS PRIOR TO ROUGH-IN.
4. PROVIDE LIGHTING CONTROL DEVICES COMPATIBLE WITH FIXTURES INSTALLED. OCCUPANCY SENSORS SHALL BE DUAL TECHNOLOGY.
5. PROVIDE ALL NECESSARY HARDWARE AND ACCESSORIES TO STEM MOUNT SCHEDULED LIGHT FIXTURES.
6. CONFIRM ALL LIGHTING FIXTURE FINISHES WITH ARCHITECT PRIOR TO PROCUREMENT.

## NOTES BY SYMBOL: ◯

| | |
|---|---|
| 1 | PROVIDE LIGHTING CONTACTOR WITH PHOTOSENSOR AND ASTRONOMICAL TIMECLOCK FOR EXTERIOR LIGHT CONTROL. EXTERNALLY MOUNT PHOTOCELL. |
| 2 | PROVIDE TWIST LOCK PHOTOCELL ON ROOF. |
| 3 | LOCATION OF 24W MICROINVERTER (ACUITY IIS 25 IOTA EM MICRO INVERTER) FOR CE FIXTURES ON CIRCUIT LC1-28. |
| 4 | LOCATION OF 24W MICROINVERTER (ACUITY IIS 25 IOTA EM MICRO INVERTER) FOR CE FIXTURES ON CIRCUIT LC1-26. |
| 5 | PROVIDE HUNTER CASSIUS 52" INDOOR/OUTDOOR MATTE BLACK CEILING FAN WITH ANGLE MOUNT AND LONG DOWNROD. PROVIDE CEILING FAN RATED JUNCTION BOX FOR CONNECTION OF FAN TO STRUCTURE. |
| 6 | COORDINATE FINAL LIGHT FIXTURE LOCATIONS IN CHASE WITH DISCIPLINES. |

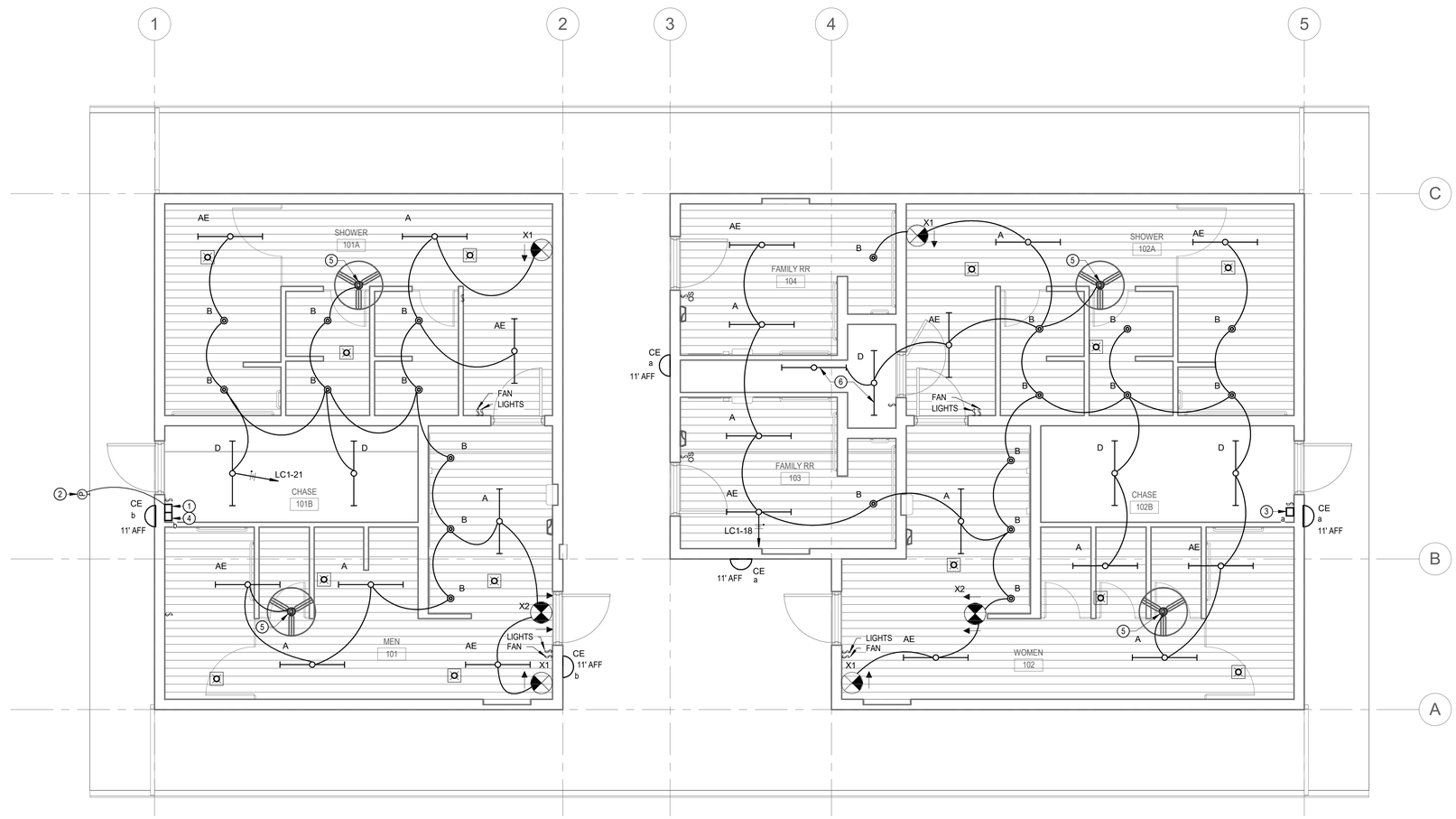


1 LIGHTING PLAN

SCALE: 1/4" = 1'-0"


B&H Engineers, Inc
511 E John Carpenter Fwy
Suite 250
Irving, TX 75062
www.BandHEngineers.com
Registration No. 9102


TEXAS PARKS & WILDLIFE


GSBS ARCHITECTS
7291 GLEVIEW DRIVE
FORT WORTH, TX 76180
817.589.1722
GSBSARCHITECTS.COM


STATE OF TEXAS
XIAOBO WANG
125066
LICENSED
PROFESSIONAL ENGINEER

21-01-22

# EISENHOWER STATE PARK

**RESTROOM REPLACEMENT**

PROJECT NUMBER: 1210136

DATE: 21-01-22
DESIGNED BY: JS
DRAWN BY: JS
REVIEWED BY: XW
REVISED:
REVISED:
REVISED:

**SHEET TITLE**
ELECTRICAL PLAN - LIGHTING

SHEET NUMBER

**E101**

## GENERAL NOTES:

1. ALL CIRCUITS SHALL BE IN CONDUIT. ALL POWER CONDUITS SHALL CONTAIN A MINIMUM OF ONE EQUIPMENT GROUNDING CONDUCTOR. PROVIDE A DEDICATED NEUTRAL FOR EACH SINGLE POLE CIRCUIT. SHARED NEUTRALS ARE NOT ALLOWED.
2. REFER TO ARCHITECTURAL ELEVATIONS FOR ADDITIONAL EQUIPMENT COORDINATION.
3. CONDUCTORS SHALL BE #12 THHN/THWN COPPER AND ALL CONDUIT SHALL BE 3/4" UNLESS OTHERWISE NOTED.
4. ALL CIRCUITS ARE SHOWN SCHEMATICALLY. FINAL ROUTING DECISIONS ARE BY THE CONTRACTOR.
5. ALL WP FIXTURES ARE TO BE DIECAST IN-USE.
6. ALL DISCONNECT SWITCHES SHALL BE NEMA 3R.
7. PROVIDE RELAY CONTROL MODULE FOR EXHAUST FANS TO BE CONTROLLED WITH BATHROOM LIGHTS.
8. ALL RECEPTACLES WITHIN CHASES SHALL BE +44" ABOVE FINISHED FLOOR.


B&H Engineers, Inc
511 E John Carpenter Fwy
Suite 250
Irving, TX 75062
www.BandHEngineers.com
Registration No. 9102


TEXAS PARKS & WILDLIFE


GSBS ARCHITECTS
7291 GLEVIEW DRIVE
FORT WORTH, TX 76180
P: 817.589.1722
GSBSARCHITECTS.COM


STATE OF TEXAS
XIAOBO WANG
125066
LICENSED
PROFESSIONAL ENGINEER

21-01-22

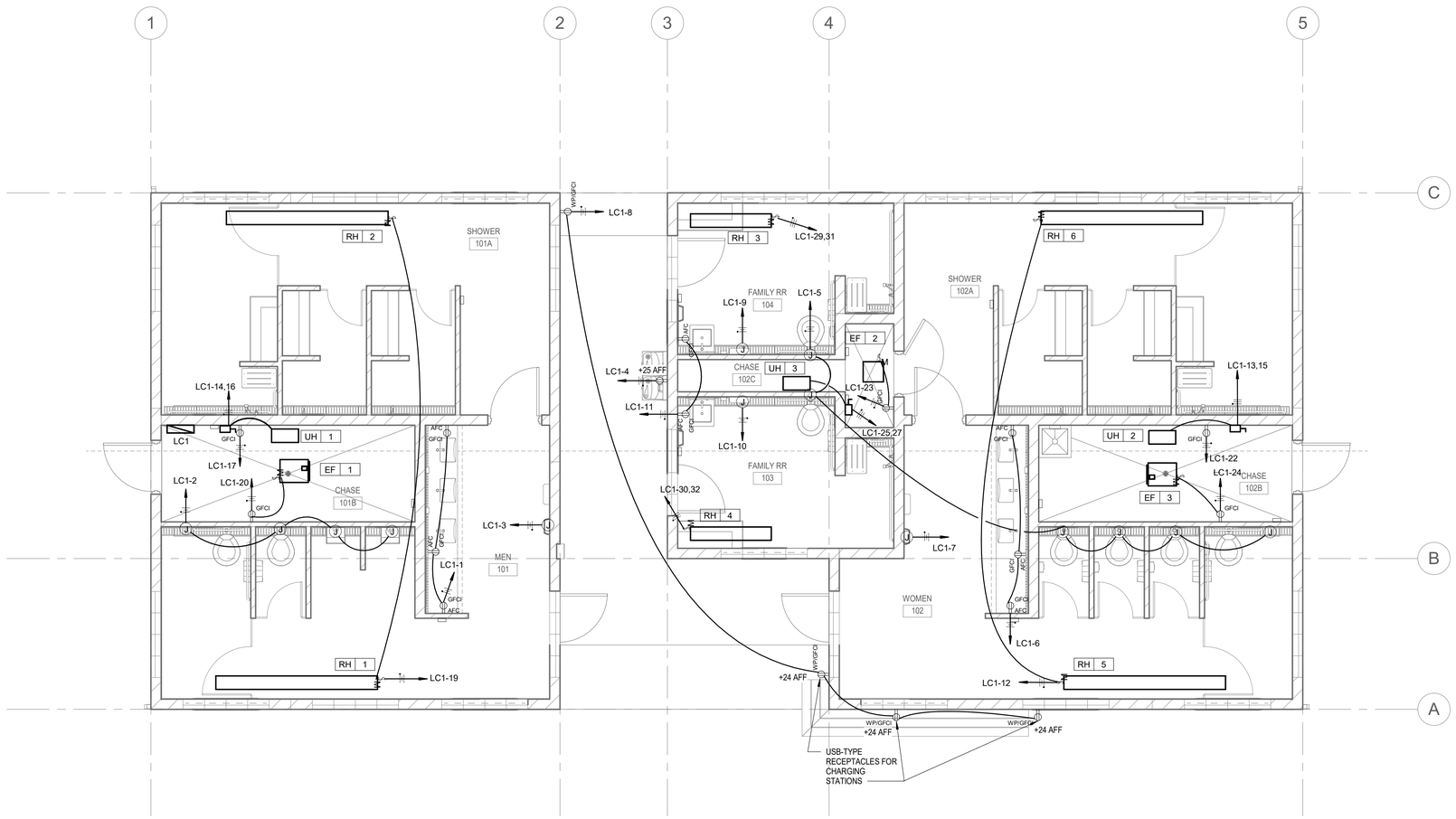


1 POWER PLAN
SCALE: 1/4" = 1'-0"

# EISENHOWER STATE PARK

**RESTROOM REPLACEMENT**

PROJECT NUMBER: 1210136

DATE: 21-01-22
DESIGNED BY: JS
DRAWN BY: JS
REVIEWED BY: XW
REVISED:
REVISED:
REVISED:

**SHEET TITLE**
ELECTRICAL PLAN - POWER

SHEET NUMBER
**E102**

## PANEL NAME: P1

**MAIN RATING:** 200 A **VOLTS:** 120/240 Single **MOUNTING:** SURFACE
**MCB RATING:** 200 A **A.I.C. RATING:** 22k **SUPPLIED FROM:**

| CKT | CIRCUIT DESCRIPTION | TRIP | POLES | A | | B | | POLES | TRIP | CIRCUIT DESCRIPTION | CKT |
|---|---|---|---|---|---|---|---|---|---|---|---|
| 1 | LC1* | 0 A | 2 | 13.51 | 0.00 | | | -- | -- | SPACE | 2 |
| 3 | -- | -- | -- | | | 14.30 | 0.00 | -- | -- | SPACE | 4 |
| 5 | SPACE | -- | -- | 0.00 | 0.00 | | | -- | -- | SPACE | 6 |
| 7 | SPACE | -- | -- | | | 0.00 | 0.00 | -- | -- | SPACE | 8 |
| 9 | SPACE | -- | -- | 0.00 | 0.00 | | | 2 | 60 A | SPD** | 10 |
| 11 | SPACE | -- | -- | | | 0.00 | 0.00 | -- | -- | -- | 12 |
| | | **TOTAL LOAD:** | | 14 | | 14.30 | | | | | |
| | | **TOTAL AMPS:** | | 112.57 A | | 119.15 A | | | | | |

| LOAD CLASSIFICATION | CONNECTED... | DEMAND FACTOR | ESTIMATED... | PANEL TOTALS | |
|---|---|---|---|---|---|
| RECEPTACLE | 3240 VA | 100.00% | 3240 VA | | |
| LIGHTING | 968 VA | 125.00% | 1210 VA | **TOTAL CONN. LOAD:** | 27.81 kVA |
| Motor | 5288 VA | 115.13% | 6088 VA | **TOTAL EST. DEMAND:** | 28.85 kVA |
| HEATING | 0 VA | 0.00% | 0 VA | **TOTAL CONN.:** | 115.86 A |
| KITCHEN | 0 VA | 0.00% | 0 VA | **TOTAL EST. DEMAND:** | 120.20 A |
| MISCELLANEOUS | 0 VA | 0.00% | 0 VA | | |

**NOTES:**
PANEL CONSTRUCTION: RAINPROOF, NEMA 3R, SERVICE-RATED LOADCENTER.
*PROVIDE PANEL WITH FEED THRU LUGS AND CONNECT PANEL LC1 TO LUGS
**PROVIDE BREAKER FOR TYPE 2 SPD PER MANUFACTURER RECOMMENDATIONS

## PANEL NAME: P2

**MAIN RATING:** 100 A **VOLTS:** 120/240 Single **MOUNTING:** SURFACE
**MCB RATING:** 100 A **A.I.C. RATING:** 22K **SUPPLIED FROM:**

| CKT | CIRCUIT DESCRIPTION | TRIP | POLES | A | | B | | POLES | TRIP | CIRCUIT DESCRIPTION | CKT |
|---|---|---|---|---|---|---|---|---|---|---|---|
| 1 | SEPTIC PANEL* | 80 A | 2 | 0.18 | 0.00 | | | 1 | 20 A | RACK RECPETACLE | 2 |
| 3 | -- | -- | -- | | | 0.00 | 0.00 | -- | -- | SPACE | 4 |
| 5 | SPACE | -- | -- | 0.00 | 0.00 | | | -- | -- | SPACE | 6 |
| 7 | SPACE | -- | -- | | | 0.00 | 0.00 | -- | -- | SPACE | 8 |
| 9 | SPACE | -- | -- | 0.00 | 0.00 | | | 2 | 60 A | SPD** | 10 |
| 11 | SPACE | -- | -- | | | 0.00 | 0.00 | -- | -- | -- | 12 |
| | | **TOTAL LOAD:** | | 0 | | 0.00 | | | | | |
| | | **TOTAL AMPS:** | | 1.50 A | | 0.00 A | | | | | |

| LOAD CLASSIFICATION | CONNECTED... | DEMAND FACTOR | ESTIMATED... | PANEL TOTALS | |
|---|---|---|---|---|---|
| RECEPTACLE | 0 VA | 0.00% | 0 VA | | |
| LIGHTING | 0 VA | 0.00% | 0 VA | **TOTAL CONN. LOAD:** | 0.18 kVA |
| Motor | 0 VA | 0.00% | 0 VA | **TOTAL EST. DEMAND:** | 0.18 kVA |
| HEATING | 0 VA | 0.00% | 0 VA | **TOTAL CONN.:** | 0.75 A |
| KITCHEN | 0 VA | 0.00% | 0 VA | **TOTAL EST. DEMAND:** | 0.75 A |
| MISCELLANEOUS | 0 VA | 0.00% | 0 VA | | |

**NOTES:**
PANEL CONSTRUCTION: RAINPROOF, NEMA 3R, SERVICE-RATED LOADCENTER. RECONNECTION OF EXISTING SEPTIC PANEL CIRCUIT
**PROVIDE BREAKER FOR TYPE 2 SPD PER MANUFACTURER RECOMMENDATIONS

## PANEL NAME: LC1

**MAIN RATING:** 200 A **VOLTS:** 120/240 Single **MOUNTING:** SURFACE
**MCB RATING:** 200 A **A.I.C. RATING:** 10K **SUPPLIED FROM:** P1

| CKT | CIRCUIT DESCRIPTION | TRIP | POLES | A | | B | | POLES | TRIP | CIRCUIT DESCRIPTION | CKT |
|---|---|---|---|---|---|---|---|---|---|---|---|
| 1 | MENS VANITY RECEPTS | 20 A | 1 | 0.54 | 0.40 | | | 1 | 20 A | ELECTRIC TOILETS | 2 |
| 3 | HAND DRYER | 20 A | 1 | | | 1.10 | 0.18 | 1 | 20 A | EWC* | 4 |
| 5 | ELECTRIC TOILETS | 20 A | 1 | 0.60 | 0.54 | | | 1 | 20 A | WOMENS VANITY RECEPTS | 6 |
| 7 | HAND DRYER | 20 A | 1 | | | 1.10 | 0.72 | 1 | 20 A | CHARGING RECEPTS | 8 |
| 9 | HAND DRYER | 20 A | 1 | 1.10 | 1.10 | | | 1 | 20 A | HAND DRYER | 10 |
| 11 | RECEPTACLE | 20 A | 1 | | | 0.36 | 0.24 | 1 | 20 A | RH-5, RH-6 | 12 |
| 13 | UH2 | 20 A | 2 | 1.50 | 1.50 | | | 2 | 20 A | UH1 | 14 |
| 15 | -- | -- | -- | | | 1.50 | 1.50 | -- | -- | -- | 16 |
| 17 | GWH-1 | 20 A | 1 | 0.18 | 0.69 | | | 1 | 20 A | WOMENS RR LIGHTING | 18 |
| 19 | RH-1, RH-2 | 20 A | 1 | | | 0.24 | 0.88 | 1 | 20 A | RECEPT, EF-1 | 20 |
| 21 | MENS RR LIGHTING | 20 A | 1 | 0.46 | 0.18 | | | 1 | 20 A | GWH-2,3 | 22 |
| 23 | CHASE 102C RECEPT, EF-2 | 20 A | 1 | | | 0.88 | 0.88 | 1 | 20 A | RECEPT, EF-3, EF-4 | 24 |
| 25 | UH-3 | 20 A | 2 | 1.50 | 0.02 | | | 1 | 20 A | EXTERIOR LIGHTS | 26 |
| 27 | -- | -- | -- | | | 1.50 | 0.03 | 1 | 20 A | EXTERIOR LIGHTS | 28 |
| 29 | RH-3 | 20 A | 2 | 1.60 | 1.60 | | | 2 | 20 A | RH-4 | 30 |
| 31 | -- | -- | -- | | | 1.60 | 1.60 | -- | -- | -- | 32 |
| 33 | SPARE | 20 A | 1 | 0.00 | 0.00 | | | 1 | 20 A | SPARE | 34 |
| 35 | SPARE | 20 A | 1 | | | 0.00 | 0.00 | 1 | 20 A | SPARE | 36 |
| 37 | SPARE | 20 A | 1 | 0.00 | 0.00 | | | 1 | 20 A | SPARE | 38 |
| 39 | SPARE | 20 A | 1 | | | 0.00 | 0.00 | 2 | 60 A | SPD** | 40 |
| 41 | SPARE | 20 A | 1 | 0.00 | 0.00 | | | -- | -- | -- | 42 |
| | | **TOTAL LOAD:** | | 14 | | 14.30 | | | | | |
| | | **TOTAL AMPS:** | | 112.57 A | | 119.15 A | | | | | |

| LOAD CLASSIFICATION | CONNECTED... | DEMAND FACTOR | ESTIMATED... | PANEL TOTALS | |
|---|---|---|---|---|---|
| RECEPTACLE | 3240 VA | 100.00% | 3240 VA | | |
| LIGHTING | 968 VA | 125.00% | 1210 VA | **TOTAL CONN. LOAD:** | 27.81 kVA |
| Motor | 5288 VA | 115.13% | 6088 VA | **TOTAL EST. DEMAND:** | 28.85 kVA |
| HEATING | 0 VA | 0.00% | 0 VA | **TOTAL CONN.:** | 115.86 A |
| KITCHEN | 0 VA | 0.00% | 0 VA | **TOTAL EST. DEMAND:** | 120.20 A |
| MISCELLANEOUS | 0 VA | 0.00% | 0 VA | | |

**NOTES:**
PROVIDE NEMA 3R LOADCENTER CONSTRUCTION
*PROVIDE GFCI BREAKER FOR EWC
**PROVIDE BREAKER FOR TYPE 2 SPD PER MANUFACTURER RECOMMENDATIONS

RISER NOTES:

1. REFERENCE UTILITY REQUIREMENTS FROM ONCOR (ELECTRIC SERVICE GUIDELINES) AS SOME REQUIREMENTS ARE SHOWN TO ASSIST THE CONTRACTOR. VERIFY AND PROVIDE AN ELECTRICAL SERVICE THAT MEETS OR EXCEEDS ALL UTILITY REQUIREMENTS PER ONCOR AND NEC-2020, IF A CONFLICT OCCURS ON THE PLANS THE CONTRACTOR SHALL PROVIDE INSTALLATION PER THE UTILITY PROVIDERS REQUIREMENTS WITH NO ADDITIONAL COMPENSATION.

2. LOADCENTERS SHALL BE RAINPROOF SQUARE D QO SERIES OR EQUAL

3. ALL UNDERGROUNG FEEDER AND BRANCH CIRCUITS CONDUITS SHALL BE SCHEDULE 40 RIGID-NONMETALLIC

4. ALL RISERS AND ABOVEGROUND CONDUIT SHALL BE SCHEDULE 80 RIGID-NONMETALLIC.

5. ALL SECONDARY SERVICE CONDUITS FOR UNDERGROUND, ABOVEGROUND AND RISER CONDUITS SHALL BE SCHEDULE 80 RIGID-NONMETALLIC.

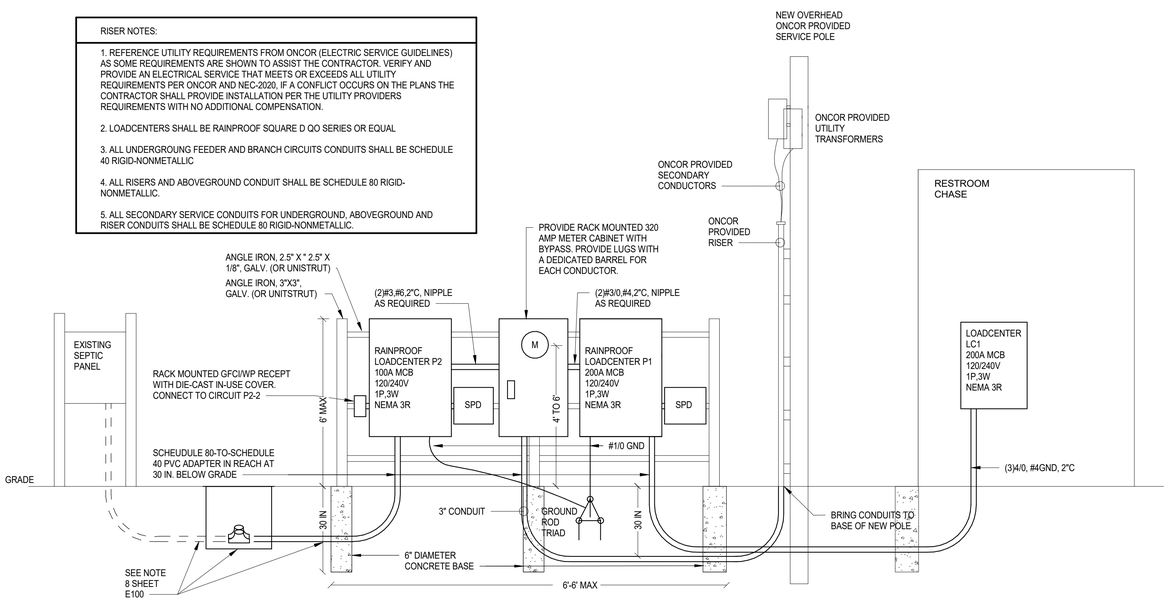


6 ELECTRICAL SERVICE RISER DIAGRAM
SCALE: NOT TO SCALE

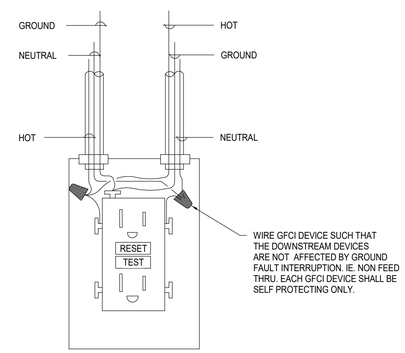


4 GFCI RECEPTACLE WIRING DIAGRAM
SCALE: NOT TO SCALE

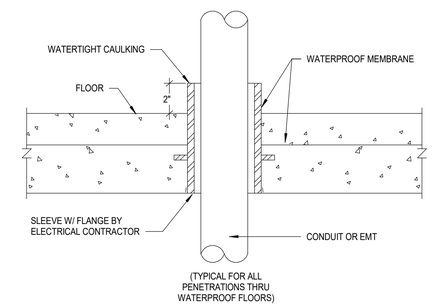


2 CONDUIT PENETRATION DETAIL
SCALE: NOT TO SCALE

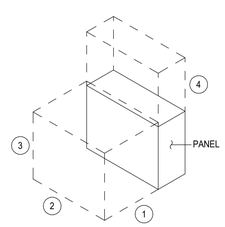


NOTES BY SYMBOL:

1. REFER TO NEC ARTICLE 110.26(A)(1)(a) THROUGH 110.26(A)(1)(c) FOR DEPTH OF WORKING SPACE FOR ELECTRICAL EQUIPMENT 600V OR LESS.
2. REFER TO NEC ARTICLE 110.26(A)(2) FOR WIDTH OF WORKING SPACE FOR ELECTRICAL EQUIPMENT 600V OR LESS.
3. REFER TO NEC ARTICLE 110.26(A)(3) FOR HEIGHT OF WORKING SPACE FOR ELECTRICAL EQUIPMENT 600V OR LESS.
4. REFER TO NEC ARTICLE 110.26(E)(1)(a) THROUGH 110.23(E)(1)(d) FOR DEDICATED EQUIPMENT SPACE FOR ELECTRICAL EQUIPMENT 600V OR LESS.

5 PANELBOARD CLEARANCE DETAIL
SCALE: NOT TO SCALE

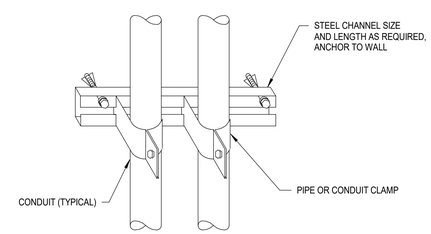


3 CONDUIT SUPPORT WALL MOUNTED DETAIL
SCALE: NOT TO SCALE

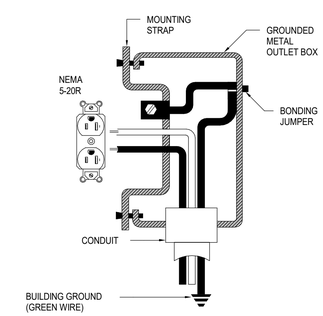


1 RECEPTACLE GROUNDING DETAIL
SCALE: NOT TO SCALE


B&H Engineers, Inc
511 E John Carpenter Fwy
Suite 250
Irving, TX 75062
www.BandHEngineers.com
Registration No. 9102


TEXAS PARKS & WILDLIFE


GSBS ARCHITECTS
7291 GLEVIEW DRIVE
FORT WORTH, TX 76180
817.589.1722
GSBSARCHITECTS.COM


STATE OF TEXAS
XIAOBO WANG
125066
LICENSED PROFESSIONAL ENGINEER
21-01-22

# EISENHOWER STATE PARK

**RESTROOM REPLACEMENT**
PROJECT NUMBER: 1210136

DATE: 21-01-22
DESIGNED BY: JS
DRAWN BY: JS
REVIEWED BY: XW
REVISED:
REVISED:
REVISED:

**SHEET TITLE**
ELECTRICAL DETAILS & SCHEDULES

SHEET NUMBER
**E301**