LOCATION MAP

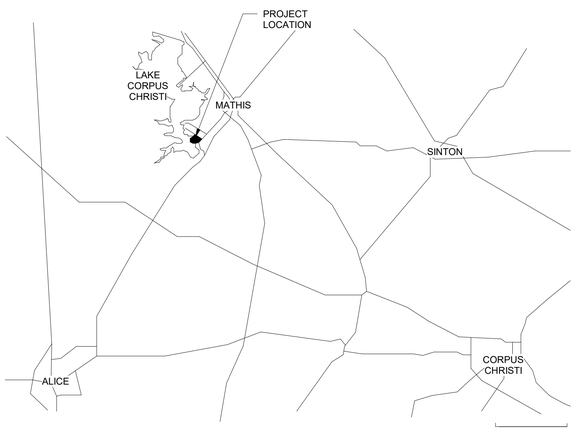

VICINITY MAP

LAKE CORPUS CHRISTI STATE PARK RESTROOM REPLACEMENT

MATHIS, TEXAS

100% CONSTRUCTION DOCUMENTS

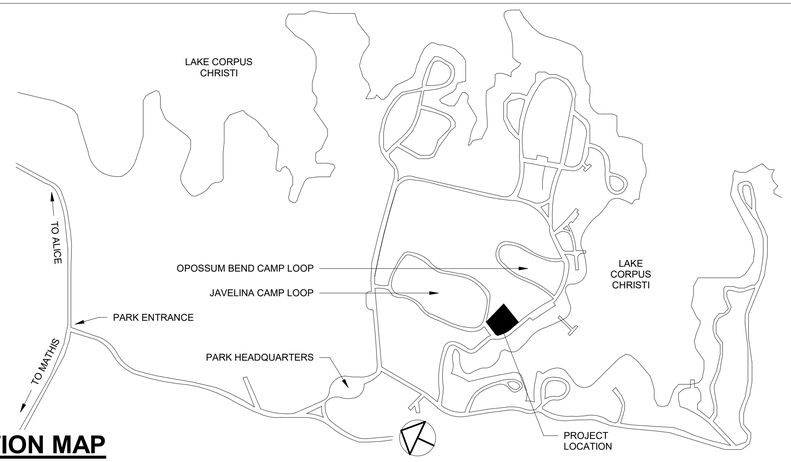

SITE LOCATION MAP

SITE ADDRESS:
23194 PARK ROAD 25
MATHIS, TX 78368

TEXAS PARKS AND WILDLIFE
LAKE CORPUS CHRISTI STATE PARK
RESTROOM REPLACEMENT
MATHIS, TEXAS

TPWD PROJECT NO. 1210196A DATE: DECEMBER 4, 2020

INDEX OF DRAWINGS

G001A	TITLE SHEET
G001A	SHEET LIST
G002	LIFE SAFETY PLAN, ABBREVIATIONS, SYMBOLS
G003	TYPICAL MOUNTING HEIGHTS
C100	EXISTING CONDITIONS PLANS
C110	EROSION & SEDIMENT CONTROL PLAN
C111	EROSION CONTROL DETAILS
C120	DEMOLITION PLAN
C130	SITE & PAVING PLAN
C131	DIMENSIONAL CONTROL PLAN
C140	GRADING PLAN
C150	UTILITY PLAN
C510	CIVIL DETAILS
C511	CIVIL DETAILS
C520	UTILITY DETAILS
C521	UTILITY DETAILS
C522	UTILITY DETAILS
C530	LIFT STATION DETAILS
C531	LIFT STATION DETAILS
L200	PLANTING PLAN
L300	DETAILS
A101	SITE PLAN
A102	FLOOR PLAN
A103	DIMENSIONS
A104	CEILING PLAN
A105	ROOF PLAN
A201	EXTERIOR ELEVATIONS
A202	EXTERIOR ELEVATIONS
A301	BUILDING SECTIONS
A302	BUILDING SECTIONS
A401	INTERIOR ELEVATIONS
A402	INTERIOR ELEVATIONS
A501	DETAILS
A502	DETAILS
A503	DETAILS
A504	DETAILS
A601	SCHEDULES
S101	STRUCTURAL NOTES
S102	STRUCTURAL NOTES
S103	SPECIAL INSPECTIONS
S104	SPECIAL INSPECTIONS
S105	WIND LOADING PLANS
S201	FOUNDATION PLAN
S202	LOW ROOF FRAMING PLAN
S203	HIGH ROOF FRAMING PLAN
S301	TYP. CONCRETE SECTIONS & DETAILS
S302	CONCRETE SECTIONS & DETAILS
S303	CONCRETE SECTIONS & DETAILS
S401	TYP. MASONRY SECTIONS & DETAILS
S402	TYP. MASONRY SECTIONS & DETAILS
S501	STEEL SECTIONS & DETAILS
S502	ROOF SECTIONS & DETAILS
M201	HVAC PLAN
M301	HVAC SCHEDULES AND DETAILS
P201	PLUMBING FLOOR PLAN - WATER
P202	PLUMBING FLOOR PLAN - SOIL, WASTE & VENT
P203	PLUMBING SECTIONS
P204	PLUMBING ROOF PLAN
P301	PLUMBING SCHEDULES
P302	PLUMBING DETAILS
P303	PLUMBING SCHEMATICS EAST SIDE - WATER
P304	PLUMBING SCHEMATICS WEST SIDE - WATER
P305	PLUMBING SCHEMATICS EAST SIDE - SOIL, WASTE & VENT
P306	PLUMBING SCHEMATICS WEST SIDE - SOIL, WASTE & VENT
E101	ELECTRICAL SITE PLAN
E201	ELECTRICAL LIGHTING PLAN
E202	ELECTRICAL POWER PLAN
E301	ELECTRICAL WIRING DIAGRAMS AND DETAILS
E302	ELECTRICAL PANELBOARD SCHEDULES

SCOPE OF WORK

BASE BID: THE PROJECT INCLUDES A NEW RESTROOM BUILDING AT THE LAKE CORPUS CHRISTI STATE PARK IN SAN PATRICIO COUNTY, TEXAS THAT SERVES THE PARK'S JAVELINA CAMP LOOP AS WELL AS THE PARK'S DAY USE. THE BUILDING INCLUDES WOMEN'S AND MEN'S RESTROOM/SHOWERS, FAMILY ROOMS, VENDING AND OUTDOOR SHOWERS.
BID ALTERNATE NO. 1: ADD MECHANICAL YARD ENCLOSURE WALLS. CMU MASONRY WALLS WITH SALTILLO TILE VENEER, METAL SWING GATE AND CONCRETE PAD/FOOTINGS.

TPWD TEAM

PROJECT MANAGER
JULIA GONZALEZ, BA, MsEM
TEXAS PARKS & WILDLIFE
(512) 389-4703 (DIRECT)
(512) 389-4400 (FAX)
julia.gonzalez@tpwd.texas.gov

DESIGN MANAGER
MEGAN WEINZIERL, AIA, LEED AP
TEXAS PARKS & WILDLIFE
(512) 389-4507 (DIRECT)
(512) 389-4400 (FAX)
megan.weinzierl@tpwd.texas.gov

PARK SUPERINTENDENT
ROBBIE MERRITT
TEXAS PARKS & WILDLIFE
(361) 547-2635 (DIRECT)
(361) 537-7040 (CELL)
robbie.merritt@tpwd.texas.gov

CONTRACT MANAGER
GISELA ALANIS, CTCM, CTPM
TEXAS PARKS & WILDLIFE
(512) 389-4480 (DIRECT)
(512) 389-4633 (FAX)
gisela.alanis@tpwd.texas.gov

CONSTRUCTION MANAGER
WILLIAM RAMOS
TEXAS PARKS & WILDLIFE
(512) 627-4179 (DIRECT)
(512) 389-4400 (FAX)
william.ramos@tpwd.texas.gov

INSPECTOR
JUAN SOLIS
TEXAS PARKS & WILDLIFE
(512) 765-1421
(512) 389-4400
juan.solis@tpwd.texas.gov

DESIGN TEAM

ARCHITECT
RICHTER ARCHITECTS
201 S. UPPER BROADWAY
CORPUS CHRISTI, TEXAS 78401
TEL: (361) 882-1288 / FAX: (361) 882-1388

LANDSCAPE ARCHITECT
ADLA, INC.
4833 SARATOGA BLVD, #116
CORPUS CHRISTI, TEXAS 78413
TEL: (361) 288-2335 / FAX: (361) 288-7312

CIVIL ENGINEER
JQ INFRASTRUCTURE
84 NE LOOP 410, SUITE 105
SAN ANTONIO, TEXAS
TEL: (210) 858-9803

STRUCTURAL ENGINEER
JQ INFRASTRUCTURE
100 GLASS STREET
DALLAS, TEXAS
TEL: (214) 752-9098 / FAX: (214) 752-8771

MEP ENGINEER
STRIDDE CALLINS & ASSOCIATES
342 S. NAVIGATION BLVD
CORPUS CHRISTI, TEXAS 78405
TEL: (361) 883-9199 / FAX: (361) 883-9177

BUILDING CODE SUMMARY

ALL CONSTRUCTION SHALL BE IN COMPLIANCE WITH MANDATORY ADOPTED CODES.

INTERNATIONAL CODE COUNCIL

BUILDING CODE	INTERNATIONAL BUILDING CODE 2015
STRUCTURAL CODE	INTERNATIONAL BUILDING CODE 2015
PLUMBING CODE	INTERNATIONAL PLUMBING CODE 2015
MECHANICAL CODE	INTERNATIONAL MECHANICAL CODE 2015
GAS CODE	INTERNATIONAL FUEL GAS CODE 2015

NATIONAL FIRE PROTECTION ASSOCIATION

ELECTRICAL CODE	NATIONAL ELECTRICAL CODE NFPA 70 2020
FIRE CODE	NFPA-1 2015
LIFE SAFETY CODE	NFPA-101 2015

STATE ENERGY CONSERVATION OFFICE / TEXAS COMPTROLLER'S OFFICE

ENERGY CODES FOR STATE BUILDINGS / WATER CONSERVATION STANDARDS — ENERGY CONSERVATION DESIGN STANDARDS: TEXAS ADMINISTRATIVE CODE, TITLE 34, PART 1, CH. 19, SUBCHAPTER C

ACCESSIBILITY CODE

U.S. DEPT OF JUSTICE, 2010 ADA STANDARDS FOR ACCESSIBLE DESIGN
ARCHITECTURAL BARRIERS ACT ACCESSIBILITY GUIDELINES: OUTDOOR DEVELOPED AREAS, NOVEMBER 25, 2013
2012 TEXAS ACCESSIBILITY STANDARDS, ELIMINATION OF ARCHITECTURAL BARRIERS, TEXAS GOVERMENT CODE, CHAPTER 469

TEXAS PARKS & WILDLIFE

TEXAS PARKS AND WILDLIFE

INFRASTRUCTURE DIVISION

4200 SMITH SCHOOL ROAD AUSTIN, TEXAS 78744-3292

SHEET LIST TABLE

Construction Drawings for Lake Corpus Christi State Park Restroom Replacement, Project No. 1210196A		Issue for Bid 12.22.2020	Addendum #4 03.11.2021
GENERAL			
G001A	TITLE SHEET	X	X
G001A	SHEET LIST		X
G002	LIFE SAFETY PLAN, ABBREVIATIONS, SYMBOLS	X	
G003	TYPICAL MOUNTING HEIGHTS	X	
CIVIL			
C100	EXISTING CONDITIONS PLANS	X	
C110	EROSION & SEDIMENT CONTROL PLAN	X	
C111	EROSION CONTROL DETAILS	X	
C120	DEMOLITION PLAN	X	
C130	SITE & PAVING PLAN	X	
C131	DIMENSIONAL CONTROL PLAN	X	
C140	GRADING PLAN	X	
C150	UTILITY PLAN	X	
C510	CIVIL DETAILS	X	
C511	CIVIL DETAILS	X	
C520	UTILITY DETAILS	X	
C521	UTILITY DETAILS	X	
C522	UTILITY DETAILS	X	
C530	LIFT STATION DETAILS	X	
C531	LIFT STATION DETAILS	X	
LANDSCAPE			
L200	PLANTING PLAN		
L300	DETAILS		
ARCHITECTURAL			
A101	SITE PLAN	X	
A102	FLOOR PLAN	X	X
A103	DIMENSIONS	X	X
A104	CEILING PLAN	X	
A105	ROOF PLAN	X	
A201	EXTERIOR ELEVATIONS	X	X
A202	EXTERIOR ELEVATIONS	X	X
A301	BUILDING SECTIONS	X	
A302	BUILDING SECTIONS	X	
A401	INTERIOR ELEVATIONS	X	X
A402	INTERIOR ELEVATIONS	X	
A501	DETAILS	X	X
A502	DETAILS	X	X
A503	DETAILS	X	X
A504	DETAILS	X	
A601	SCHEDULES	X	X

Construction Drawings for Lake Corpus Christi State Park Restroom Replacement, Project No. 1210196A		Issue for Bid 12.22.2020	Addendum #4 03.11.2021
STRUCTURAL			
S101	STRUCTURAL NOTES	X	X
S102	STRUCTURAL NOTES	X	X
S103	SPECIAL INSPECTIONS	X	X
S104	SPECIAL INSPECTIONS		X
S105	WIND LOADING PLANS		X
S201	FOUNDATION PLAN	X	
S202	LOW ROOF FRAMING PLAN	X	
S203	HIGH ROOF FRAMING PLAN	X	X
S301	TYP. CONCRETE SECTIONS & DETAILS	X	
S302	CONCRETE SECTIONS & DETAILS	X	
S303	CONCRETE SECTIONS & DETAILS	X	
S401	TYP. MASONRY SECTIONS & DETAILS	X	
S402	TYP. MASONRY SECTIONS & DETAILS	X	
S501	STEEL SECTIONS & DETAILS	X	
S502	ROOF SECTIONS & DETAILS	X	
MEP			
M201	HVAC PLAN	X	
M301	HVAC SCHEDULES AND DETAILS	X	
P201	PLUMBING FLOOR PLAN - WATER	X	X
P202	PLUMBING FLOOR PLAN - SOIL, WASTE & VENT	X	X
P203	PLUMBING SECTIONS	X	
P204	PLUMBING ROOF PLAN	X	
P301	PLUMBING SCHEDULES	X	X
P302	PLUMBING DETAILS	X	
P303	PLUMBING SCHEMATICS EAST SIDE - WATER	X	X
P304	PLUMBING SCHEMATICS WEST SIDE - WATER	X	
P305	PLUMBING SCHEMATICS EAST SIDE - SOIL, WASTE & VENT	X	X
P306	PLUMBING SCHEMATICS WEST SIDE - SOIL, WASTE & VENT	X	
E101	ELECTRICAL SITE PLAN	X	
E201	ELECTRICAL LIGHTING PLAN	X	
E202	ELECTRICAL POWER PLAN	X	
E301	ELECTRICAL WIRING DIAGRAMS AND DETAILS	X	
E302	ELECTRICAL PANELBOARD SCHEDULES	X	

TEXAS PARKS & WILDLIFE

RICHTER ARCHITECTS

LAKE CORPUS CHRISTI STATE PARK
RESTROOM REPLACEMENT
PROJECT NUMBER 1210196A

DATE: 12-22-2020
DESIGNED BY: DR/ECR
DRAWN BY: MRH
REVIEWED BY:
REVISED:

REVISED:

REVISED:

PHASE: 100% CONSTRUCTION DOCUMENTS

SHEET TITLE
LIFE SAFETY PLAN, ABBREVIATIONS, SYMBOLS

SHEET NUMBER
G001A

REGISTERED ARCHITECT
MINA LING RICHTER
12468
STATE OF TEXAS
12-04-20

C:\Users\mrich\OneDrive\Documents\22003.00 - TPWD Lake CC Restroom\22003.00 - TPWD Lake CC Restroom Replacement 12-04_LT.rvt

LIFE SAFETY PLAN

BUILDING CODE SUMMARY

INTERNATIONAL BUILDING CODE 2015

1. PROJECT: LAKE CORPUS CHRISTI STATE PARK RESTROOM REPLACEMENT

2. LOCATION: MATHIS, TEXAS

3. PRIMARY OCCUPANCY GROUP: GROUP U

4. SECONDARY OCCUPANCY: NONE

5. TYPE OF CONSTRUCTION: V-B

6. AUTOMATIC FIRE SUPPRESSION: NONE

7. BUILDING AREA (GROSS AREA)

TOTAL: 2285 Square Feet

FRONTAGE INCREASE - 506.3.3
If = (F/P - 0.25)W/30
If = (257/257 - 0.25)1
If = 0.75

8. BUILDING AREA & HEIGHT LIMITATIONS - TAB 504.3, 504.4 AND 506.2

1 STORIES ABOVE GRADE 5,500 SF PER STORY 40 FT MAX HT

TOTAL MAXIMUM ALLOWABLE AREA - 506.1
Aa = At + (NS x If)

Aa = 5,500 + (5,500 x 0.75)
Aa = 9,625 SF

9. FIRE PROTECTION REQUIREMENTS

PRIMARY STRUCTURAL FRAME - TAB 601: 0 HR
BEARING WALLS (EXTERIOR) - TAB 601: 0 HR
BEARING WALLS (INTERIOR) - TAB 601: 0 HR
NON-BEARING WALLS / PARTITIONS (INTERIOR) - TABE 601: 0 HR
FLOOR CONST + SECONDARY MEMBERS - TAB 601: 0 HR
ROOF CONST + SECONDARY MEMBERS - TAB 601: 0 HR

NON-BEARING WALLS / PARTITIONS (EXTERIOR) - TAB 602
FIRE SEPARATION DISTANCE
LESS THAN 5': 1 HR
LESS THAN 10', GREATER OR EQUAL TO 5': 1 HR
LESS THAN 30', GRATER OR EQUAL TO 10': 0 HR
GREATER OR EQUAL TO 30': 0 HR

CORRIDORS (OCC LOAD > 30, NO SPRINKLER) - 1020.1: 1 HR
INTERIOR EXIT STAIRWAYS (STORIES < 4) – 1023: N/A

10. ACCESSORY OCCUPANCY - 509: NONE

11. MINIMUM CEILING HEIGHT - 1003.2: 7'-6"

12. REQUIRED EGRESS WIDTHS

MIN. CORRIDOR WIDTH - 1020.2: N/A
MIN. CORRIDOR WIDTH ALLOWANCE - 1005.3.2: 0.2" PER OCCUPANT
MIN. STAIR WIDTH ALLOWANCE - 1005.3.1: N/A
MAX. FLOOR AREA ALLOWANCES - TAB 1004.1.2
FOYER/RESTROOMS/FAMILY ROOMS: 1682 SF/50 SF PER OCC: 33 OCCUPANTS
NUMBER OF EXITS REQUIRED - TAB 1006.3.1: 2 MIN. PER STORY (1-500 OCCUPANTS)
MAX. TRAVEL DISTANCE TO EXIT - TAB 1017.2: 300' WITHOUT SPRINKLERS
DEAD END CORRIDORS - 1020.4: 20' MAX. TRAVEL ALLOWED
EXITS THROUGH ADJOINING ROOMS - 1016.2
PERMITTED AT ACCESSORY, NON-HIGH HAZARD ROOMS
NOT PERMITTED THROUGH KITCHEN, STORAGE, SIMILAR

13. FIRE EXTINGUISHER REQUIREMENTS (NFPA) - TAB 906.3

1 "4A" FIRE EXTINGUISHER REQUIRED PER 11,250 SF OR
75 FT FROM THE MOST REMOTE POINT

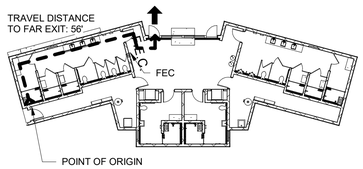

1 OCCUPANCY & EGRESS PLAN
1" = 20'-0"

ABBREVIATIONS / SYMBOLS

HATCH LEGEND

- STRUCTURAL CONCRETE (CAST-IN-PLACE, PRECAST, CAST STONE)
- BRICK (COMMON OR FACE)
- CONCRETE MASONRY UNITS (CMU)
- METAL
- METAL LATHE
- EARTH
- POROUS FILL (STONE OR GRAVEL, ETC.)
- LIGHTWEIGHT CONCRETE (OR CONC. FILL)
- RAMMED EARTH
- PLYWOOD (LARGE SCALE)
- WOOD FINISH
- INSULATION (LOOSE OR BATT)
- INSULATION (RIGID)
- GLASS (LARGE SCALE)
- CERAMIC TILE
- GYPSUM WALLBOARD (FIBERBOARD, ETC.)
- PLASTER, SAND, CEMENT, GROUT
- STONE VENEER

LIFE SAFETY PLAN LEGEND

- 1 HR FIRE BARRIER (45 MIN DOORS) ALL WALLS NOT NOTED ARE TO BE NON-RATED PARTITION WALLS
- ARROW INDICATES POINT OF DISCHARGE AND DIRECTION OF TRAVEL
- FEC — FIRE EXTINGUISHER CABINET (RECESSED UNLESS OTHERWISE NOTED)
- EXIT EXIT — EXIT SIGNS

SYMBOL LEGEND

- NEW OR REQD. ELEV. — (ELEV.)
- EXIST. POINT ELEV. — E(ELEV.)
- REVISION — 1
- PARTITION TYPE — A
- DOOR KEY — 101
- COLUMN GRID — 0
- DETAIL REFERENCE — 1 A101 SIM
- INTERIOR ELEVATION KEY — 1 A101 SIM
- EXIST. CONTOURS ELEVATIONS NOTED ON HIGH SIDE — 10.0
- NEW CONTOURS — 10.0
- LEVEL LINE — Name Elevation
- WINDOW KEY — 1
- BUILDING SECTION KEY — 1 A101 SIM
- WALL SECTION KEY — 1 A101 SIM
- EXTERIOR ELEVATION KEY — 1 A101 SIM
- EXTERIOR ELEVATION KEY — A1.10 1

LEGEND OF ABBREVIATIONS

A.F.F.	ABOVE FINISHED FLOOR
A.S.C.	ABOVE SUSPENDED CEILING
A.P.	ACCESS PANEL
ACOUST.	ACOUSTICAL
ADD.	ADDENDUM
ADJ.	ADJACENT
AGG.	AGGREGATE
A / C	AIR CONDITIONING
ALT.	ALTERNATE
ALUM.	ALUMINUM
A.B.	ANCHOR BOLT
APPROX.	APPROXIMATE
ARCH.	ARCHITECT (URAL)
A.D.	AREA DRAIN
ASB.	ASBESTOS
ASPH.	ASPHALT
AUTO.	AUTOMATIC
B.C.	BACK OF CURB
BEAR'G	BEARING
B.M.	BENCH MARK
BEL.	BELOW
BET.	BETWEEN
BVL.	BEVELED
BLK.	BLOCK
BLK'G	BLOCKING
BD.	BOARD
B.W.	BOTH WAYS
BTM.	BOTTOM
BLDG.	BUILDING
B.U.R.	BUILT-UP ROOFING
BBD.	BULLETIN BOARD
CAB.	CABINET
CAD.	CADMIUM
CSMT.	CASEMENT
C.I.	CAST IRON
C.I.P.C.	CAST-IN-PLACE CONCRETE
C.ST.	CAST STONE
CLG.	CEILING
CEM.	CEMENT
CM	CENTIMETER (S)
CER.	CERAMIC
CH.BD.	CHALKBOARD
CHAM.	CHAMFER
CHNLS.	CHANNELS
CIR.	CIRCLE
CIRC.	CIRCUMFERENCE
CLR.	CLEAR(ANCE)
COL.	COLUMN
COMP.	COMPOSITION
COMPR.	COMPRESS(ED)(ION) (IBLE)
CONC.	CONCRETE
C.M.U.	CONCRETE MASONRY UNIT
CONST.	CONSTRUCTION
CONT.	CONTINUOUS, CONTINUE
CONTR.	CONTRACT
(OR)	
C.JT.	CONTROL JOINT
CPR.	COPPER
C.G.	CORNER GUARD
CORR.	CORRUGATED
CTR.	COUNTER
CFL.	COUNTERFLASHING
CS.	COUNTERSINK
C.F.	CUBIC FEET
C.Y.	CUBIC YARD
DPR.	DAMPER
DMPRNG.	DAMPPROOFING
D.L.	DEAD LOAD
DEMO.	DEMOLISHED, DEMOLITION
DMT.	DEMOUNTABLE
DEP.	DEPRESSED
DTL.	DETAIL
DIAG.	DIAGONAL
DIAM.	DIAMETER
DIM.	DIMENSION
DIV.	DIVISION
DR.	DOOR
D.A.	DOUBLE-ACTING
D.H.	DOUBLE HUNG
DTA.	DOVETAIL ANCHOR
DTS.	DOVETAIL ANCHOR
SLOT	
D.S.	DOWNSPOUT
DRBD.	DRAINBOARD
D.	DRAWER
DWG.	DRAWING
D.F.	DRINKING FOUNTAIN
DW.	DUMBWAITER
E.F.	EACH FACE
ELEC.	ELECTRIC (AL)
E.P.	ELECTRICAL PANELBOARD
E.W.C.	ELECTRIC WATER COOLER
EL.	ELEVATION
ELEV.	ELEVATOR
EMER.	EMERGENCY
ENC.	ENCLOSURE
EQ.	EQUAL
EQUIP.	EQUIPMENT
ESC.	ESCALATOR
EST.	ESTIMATE
EXCA.	EXCAVATE
EXH.	EXHAUST
EXIST.	EXISTING
E.J.	EXPANSION JOINT
E.MTL.PL.	EXPANDED METAL PLATE
E.B.	EXPANSION BOLT
EXP.	EXPOSED
EXT.	EXTERIOR
F.B.	FACE BRICK
F.O.C.	FACE OF CONCRETE
F.O.F.	FACE OF FINISH
F.O.M.	FACE OF MASONRY
F.O.S.	FACE OF STUD
FAS.	FASTEN, FASTENER
F.BD.	FIBERBOARD
F.GL.	FIBERGLASS
FIN.	FINISH(ED)
F.F.E.	FINISH FLOOR ELEVATION
F.F.L.	FINISH FLOOR LINE
F.A.	FIRE ALARM
F.BRK.	FACE BRICK
F.E.	FIRE EXTINGUISHER
F.E.B.	FIRE EXTINGUISHER W/ BRACKET MOUNT
F.E.C.	FIRE EXTINGUISHER W/ CABINET
F.HS.	FIRE HOSE CABINET
F.P.	FIREPROOF
F.R.C.	FIRE-RESISTANT COATING
F.RT.	FIRE-RETARDANT
FLASH'G	FLASHING
FH.M.S.	FLATHEAD MACHINE SCREW
FH.W.S.	FLATHEAD WOOD SCREW
FLEX.	FLEXABLE
FLR.	FLOOR (ING)
FLCO	FLOOR CLEAN OUT
F.D.	FLOOR DRAIN
F.PL.	FLOOR PLATE
FLUOR.	FLUORESCENT
F.JT.	FLUSH JOINT
FT'G	FOOTING
FOUND.	FOUNDATION
FR.	FRAME (D) (ING)
FR.A.	FRESH AIR
F.S.	FULL SIZE
F.B.O.	FURNISHED BY OWNER
FURR.	FURR(ED), (ING)
FUT.	FUTURE
GA	GAGE, GAUGE
GALV.	GALVANIZED
G.I.	GALVANIZED IRON
G.P.	GALVANIZED PIPE
G.S.S.	GALVANIZED STEEL SHEET
GKT.	GASKET (ED)
G.C.	GENERAL CONTRACTOR
GL.	GLASS, GLAZING
GL.BLK.	GLASS BLOCK
G.C.M.U.	GLAZED CONCRETE MASONRY UNIT
G.S.T.	GLAZED STRUCTURAL TILE
G.B.	GRAB BAR
GD.	GRADE, GRADING
GRN.	GRANITE
GVL.	GRAVEL
G.F.	GROUND FACE
GT.	GROUT
G.	GUTTER
GYP.BD.	GYPSUM DRY WALL
GYP.L.	GYPSUM LATH
GYP.PL.	GYPSUM PLASTER
GYP.TL.	GYPSUM TILE
HH.	HANDHOLE
HBD.	HARDBOARD
HDW.	HARDWARE
HD.WD.	HARDWOOD
H.JT.	HEAD JOINT
HDR.	HEADER
HT'G	HEATING
HVAC	HEATING / VENTILATING/ AIR CONDITIONING
HT.	HEIGHT
H.C.	HOLLOW CORE
H.M.	HOLLOW METAL
HO.	HOOKS
HOR.	HORIZONTAL
H.B.	HOSE BIBB
HDPE	HIGH-DENSITY POLYETHYLENE
INCIN.	INCINERATOR
INCL.	INCLUD(ED) (ING)
I.D.	INSIDE DIAMETER
INSUL.	INSULATE (D) (ING)
INT.	INTERIOR
ILK.	INTERLOCK
INTM.	INTERMEDIATE
INV.	INVERT
I.P.S.	IRON PIPE SIZE
J.C.	JANITOR'S CLOSET
JT.	JOINT
J.F.	JOINT FILLER
J.	JOIST
K.PL.	KICKPLATE
KIT.	KITCHEN
K.O.	KNOCK OUT
LBL.	LABEL
LAB.	LABORATORY
LAD.	LADDER
L.B.	LAG BOLT
LAM.	LAMINATE (D)
LAV.	LAVATORY
L.H.	LEFT HAND
L.	LENGTH
LT.	LIGHT
L.C.	LIGHT CONTROL
LP.	LIGHTPROOF
LW.	LIGHTWEIGHT
LW.C.	LIGHTWEIGHT CONCRETE
LMST.	LIMESTONE
LNTL.	LINTEL
L.L.	LIVE LOAD
LVR.	LOUVER
L.PT.	LOW POINT
M.B.	MACHINE BOLT
MH.	MANHOLE
MANUF.	MANUFACTURE (ER)
MRB.	MARBLE
MAS.	MASONRY
M.O.	MASONRY OPENING
MATL.	MATERIAL (S)
MAX.	MAXIMUM
MECH.	MECHANICAL
M.C.	MEDICINE CABINET
MED.	MEDIUM
MBR.	MEMBER
MEMB.	MEMBRANE
MTL.	METAL
M.F.D.	METAL FLOOR DECKING
MTL.	
FURR'G	METAL FURRING
M.R.D.	METAL ROOF DECKING
MTL.	
THR.	METAL THRESHOLD
M	METER
MM	MILLIMETER
M.WK.	MILLWORK
MIN.	MINIMUM
MIRR.	MIRROR
MISC.	MISCELLANEOUS
MOD.	MODULAR
MLD.	MOLDING, MOULDING
M.R.	MOP RECEPTOR
MTD.	MOUNT (ED), (ING)
MULL.	MULLION
NL.	NAILABLE
NAT.	NATURAL
NI.	NICKEL
N.R.	NOISE REDUCTION
N.R.C.	NOISE REDUCTION COEFFICIENT
NOM.	NOMINAL
N.	NORTH
N.I.C.	NOT IN CONTRACT
N.T.S.	NOT TO SCALE
OBS.	OBSCURE
O.C.	ON CENTER
OP.	OPAQUE
OPEN'G	OPENING
O.J.	OPEN-WEB JOIST
OPP.	OPPOSITE
O.H.	OPPOSITE HAND
OP.S.	OPPOSITE SURFACE
O.D.	OUTSIDE DIAMETER
O.H.M.S.	OVALHEAD MACHINE SCREW
O.H.W.S.	OVALHEAD WOOD SCREW
OA.	OVERALL
PNT.	PAINT, (ED)
PNL.	PANEL
P.B.	PANIC BAR
P.T.D.	PAPER TOWEL DISPENSER
P.T.R.	PAPER TOWEL RECEPTOR
PAR.	PARALLEL
PRK.	PARKING
P.BD.	PARTICLE BOARD
PART.	PARTITION
PV.	PAVE (D), (ING)
PVMT.	PAVEMENT
PED.	PEDESTAL
PERF.	PERFORATE (D)
PLAS.	PLASTER
P.LAM.	PLASTIC LAMINATE
PL.	PLATE
P.G.	PLATE GLASS
PLYWD.	PLYWOOD
PT.	POINT
PVC	POLYVINYL CHLORIDE
P.E.	PORCELAIN ENAMEL
P.T.C.	POST-TENSIONED CONCRETE
PCF	POUNDS PER CUBIC FOOT
PFL	POUNDS PER LINEAR FOOT
PSF	POUNDS PER SQUARE FOOT
PSI	POUNDS PER SQUARE INCH
PC.C.	PRECAST CONCRETE
PFB.	PREFABRICATE (D)
PFN.	PREFINISHED
PRF.	PREFORMED
PS.C.	PRE-STRESSED CONCRETE
P.L.	PROPERTY LINE
Q.T.	QUARRY TILE
RBT.	RABBET, REBATE
RAD	RADIUS
RAIL'G	RAILING
R.E.	RAMMED EARTH
REF.	REFERENCE
RFL.	REFLECT (ED), (IVE), (OR)
REFG.	REFRIGERATOR
REG.	REGISTER
REINF.	REINFORCE (D), (ING)
R.C.P.	REINFORCED CONCRETE PIPE
REM.	REMOVE
RES.	RESILIENT
RET.	RETURN
R.A.	RETURN AIR
RVS.	REVERSE (SIDE)
REV.	REVISION (S), REVISED
R.H.	RIGHT HAND
R.O.W.	RIGHT OF WAY
R.	RISER
RVT.	RIVET
R.D.	ROOF DRAIN
RF.H.	ROOF HATCH
ROOF'G	ROOFING
RM.	ROOM
R.O.	ROUGH OPENING
R.B.	RUBBER BASE
RB.T.	RUBBER TILE
RBL.	RUBBLE STONE
SF.GL.	SAFETY GLASS
SCH.	SCHEDULE
SCR.	SCREEN
SNT.	SEALANT
SEAT'G	SEATING
SEC.	SECTION
S.SK.	SERVICE SINK
SHEATH'G	SHEATHING
SHT.	SHEET
S.G.	SHEET GLASS
SH.	SHELF, SHELVING
S.H.	SINGLE HUNG
SIM.	SIMILAR
SK.L.	SKYLIGHT
SL.	SLEEVE
S.C.	SOLID CORE
SP.	SOUNDPROOF
S.	SOUTH
SPC.	SPACER
SPK.	SPEAKER
SPL.	SPECIAL
SPEC.	SPECIFICATION (S)
SQ.	SQUARE
S.ST.	STAINLESS STEEL
STD.	STANDARD
STA.	STATION
ST.	STEEL
STG.	STORAGE
S.D.	STORM DRAIN
STRUCT.	STRUCTURAL
S.C.T.	STRUCTURAL CLAY TILE
SUSP.	SUSPENDED
SYM.	SYMMETRY (ICAL)
SYS.	SYSTEM
TKBD.	TACKBOARD
TKS.	TACKSTRIP
TEL.	TELEPHONE
TV	TELEVISION
TERR.	TERRAZZO
THK.	THICK(NESS)
THR.	THRESHOLD
T.PTN.	TOILET PARTITION
T.P.D.	TOILET PAPER DISPENSER
TOL.	TOLERANCE
T & G	TONGUE & GROOVE
T.O.C.	TOP OF CURB
T.O.S.	TOP OF STRUCTURE
T.O.STL	TOP OF STEEL
T.W.	TOP OF WALL
T.B.	TOWEL BAR
TRM.	TRANSOM
T.R.	TRASH RECEPTACLE
T	TREAD
TYP.	TYPICAL
UC.	UNDERCUT
UNF.	UNFINISHED
UR.	URINAL
VJ.	V-JOINT (ED)
V.B	VAPOR BARRIER
VAR.	VARNISH
VNR.	VENEER
VRM.	VERMICULITE
VERT.	VERTICAL
V.G.	VERTICAL GRAIN
VNL.	VINYL
V.A.T.	VINYL ASBESTOS TILE
V.B.	VINYL BASE
V.T.	VINYL TILE
VWC	VINYL WALL COVERING
WSCT.	WAINSCOT
W.T.W.	WALL TO WALL
W.H.	WALL HUNG
W.C.	WATER CLOSET
W.HTR.	WATER HEATER
WP.	WATERPROOFING
WS.	WATERSTOP
W.W.F.	WELDED WIRE FABRIC
W	WEST
WH.B.	WHEEL BUMPER
W.W.	WIDTH WIDE
WNDW.	WINDOW
W.G.	WIRE GLASS
W.M.	WIRE MESH
W/	WITH
W/O	WITHOUT
WD.	WOOD
W.B.	WOOD BASE
W.PT.	WORKING POINT

TEXAS PARKS & WILDLIFE

RICHTER ARCHITECTS

LAKE CORPUS CHRISTI STATE PARK
RESTROOM REPLACEMENT
PROJECT NUMBER 12101196A

DATE: 12-22-2020
DESIGNED BY: DR/ECR
DRAWN BY: MRH
REVIEWED BY:
REVISED:

REVISED:

REVISED:

PHASE: 100% CONSTRUCTION DOCUMENTS

SHEET TITLE
LIFE SAFETY PLAN, ABBREVIATIONS, SYMBOLS

SHEET NUMBER
G002

REGISTERED ARCHITECT MAYA LING RICHTER 20468 STATE OF TEXAS
12-04-20

C:\Users\mrich\OneDrive\Documents\22003.00 - TPWD Lake CC Restroom\22003.00 - TPWD Lake CC Restroom Replacement 12-04_LT.rvt

EDITOR'S NOTES

1. IF LEADING EDGE (AKA LOWEST SURFACE) IS > 27" AND < 80" THEN OBJECT IS CONSIDERED PROTRUDING. IF > 4" DEEP VERIFY PRODUCT SPECIFIED IS <27" A.F.F. OR <4". HAND DRIERS CAN BE PROTECTED BY HAVING PERMANENTLY ATTACHED SURFACE MOUNTED TRASH RECEPTACLES TO THE OPEN SIDE(S).
2. BENCHES SHALL BE 42" LONG MIN. AND LONGER WHERE INDICATED.
3. 46" MAX. TO HIGHEST OPERABLE PART IF SIDE REACH IS OBSTRUCTED BY OBJECT 10"-24" DEEP AND < 34" HIGH. VERIFY LOCATION OF DISPENSER IN RELATION TO OTHER ACCESSORIES OR FIXTURES AND SHOW DIMENSION PER 308.
4. SKIRT IS NOT REQUIRED WHEN FOUNTAIN IS LOCATED WITHIN ALCOVE OR WHEN WING WALL PROVIDED. VERIFY ALCOVE CONDITIONS MEET REQUIREMENTS. IF 3 OR MORE FOUNDATIONS ARE PROVIDED, ADJUST ADDITIONAL AT STANDARD HEIGHT.
5. DUE TO REQUIREMENTS FOR AGE 3-4, AN L-SHAPED GRAB BAR MAY BE REQUIRED BUT MAY NOT BE ALLOWED - VERIFY WIDTH RAS HOW TO PROCEED.
6. USE CORRECT PAPER ROLL TYPE(S) FOR YOUR PROJECT. DO NOT SPEC TYPES WITH CONTROLLED DELIVERY (NOT TAS COMPLIANT) NOR LOCATE WITHIN REQUIRED CLEARANCE FOR 3 OR MORE BARS PROVIDED GRAB BARS.
7. TYPICALLY DO NOT PROVIDE FOR ELEMENTARY AGE RESTROOMS. SHOW CORRECTLY IN PLAN AND IN WOMENS RESTROOMS ONLY.
8. IF NO SEAT IS PROVIDED, CONTROL AREA MAY RUN ENTIRE LENGTH OF WALL. GRAB BAR MUST ALSO BE C-SHAPED OR 3 BARS PROVIDED ON ALL 3 WALLS.
9. 2012 TAS DOES NOT REQUIRE TOP OF MIRRORS OVER LAVATORIES TO BE 74" MIN. ADVISORY 603.3 RECOMMENDS THIS FOR FULL HEIGHT, BUT IS NOT REQUIRED.

REFERENCE

TAS 2012 STANDARD DETAILS FOR CHILDREN USE AND FIRE STATION SPECIFIC MOUNTING HEIGHT VIEWS

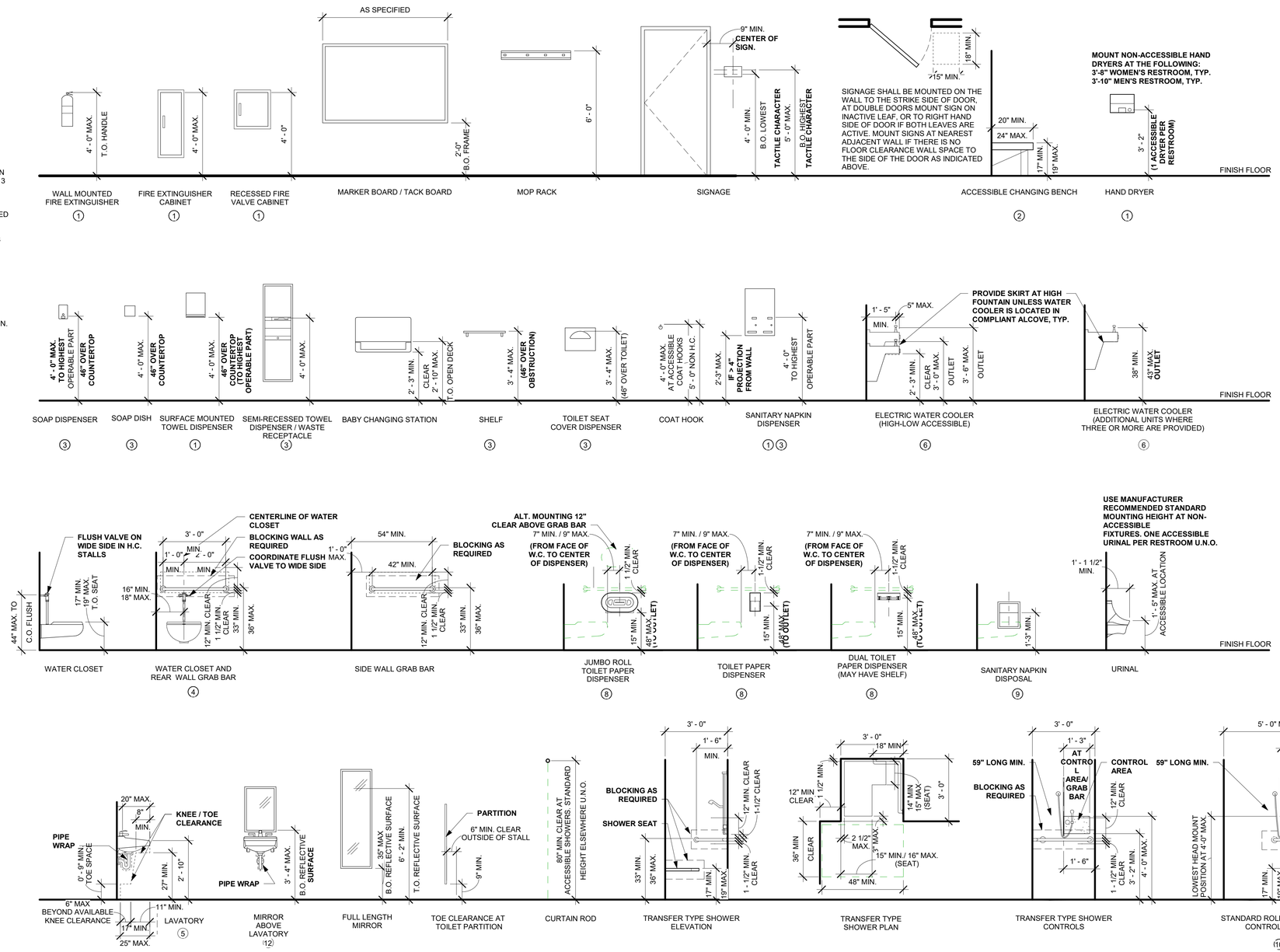

TYPICAL MOUNTING HEIGHTS

NOT TO SCALE

TEXAS PARKS & WILDLIFE

RICHTER ARCHITECTS

LAKE CORPUS CHRISTI STATE PARK
RESTROOM REPLACEMENT
PROJECT NUMBER 1210196A

DATE: 12-22-2020
DESIGNED BY: DR/ECR
DRAWN BY: MRH
REVIEWED BY:
REVISED:
REVISED:
REVISED:
PHASE: 100% CONSTRUCTION DOCUMENTS

SHEET TITLE
TYPICAL MOUNTING HEIGHTS

SHEET NUMBER
G003

REGISTERED ARCHITECT MARK LING RICHTER 20468 STATE OF TEXAS
12-04-20

C:\Users\mrich\OneDrive\Documents\22003.00 - TPWD Lake CC Restroom\22003.00 - TPWD Lake CC Restroom Replacement 12-04_LT.rvt

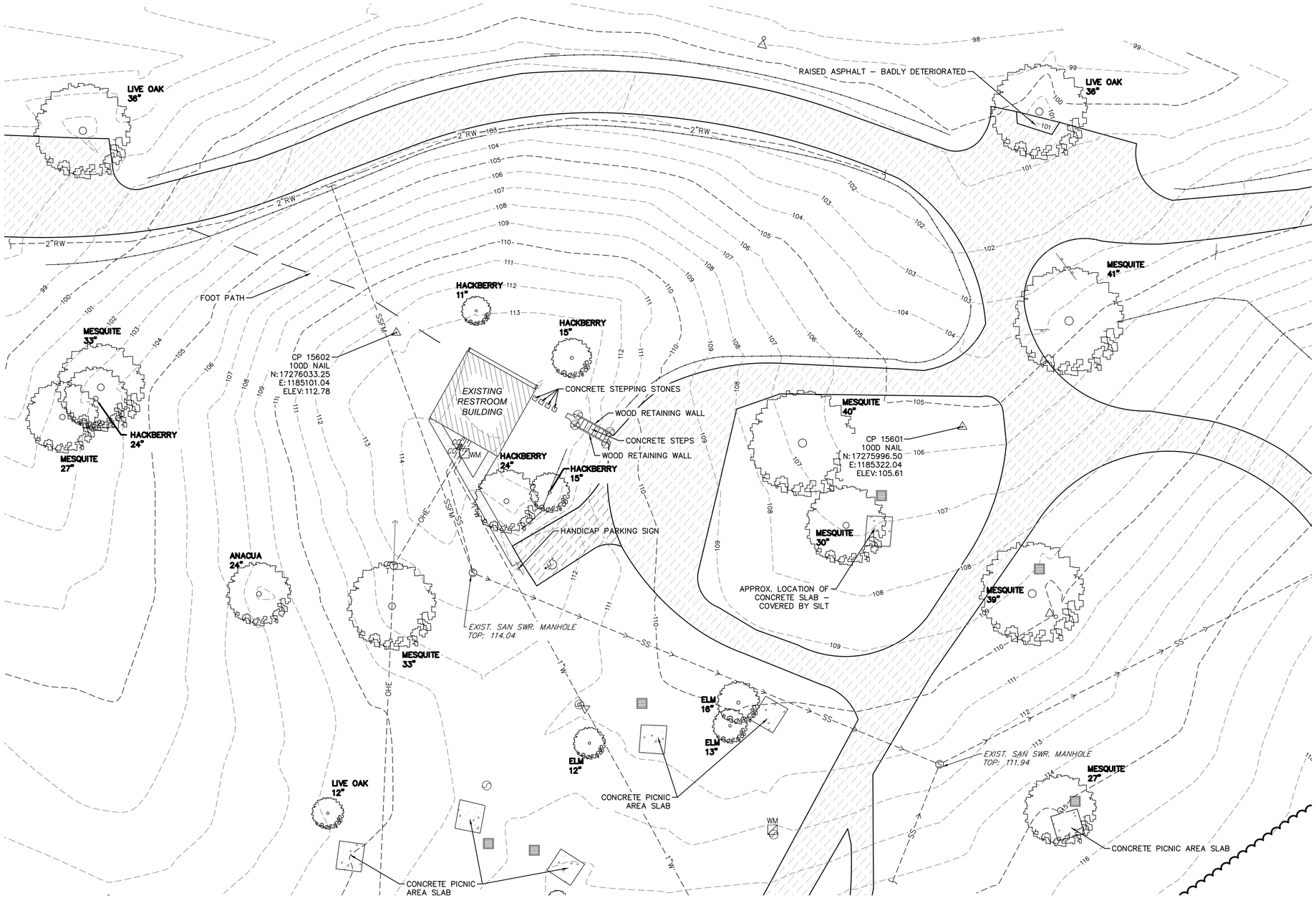

N

GRAPHIC SCALE

0 20 40

(IN FEET)
1 inch = 20 ft.

Legend

–––OHE–––	EXISTING OVERHEAD ELECTRIC LINE
–––SS–––	EXISTING SANITARY LINE
–––W–––	EXISTING WATER LINE
–––RW–––	EXISTING RAW WATER LINE
	EXISTING WOODEN POST FENCE
–––105–––	EXISTING MAJOR TOPO CONTOUR
–––106–––	EXISTING MINOR TOPO CONTOUR
	EXISTING SANITARY SEWER MANHOLE
	EXISTING SANITARY SEWER CLEAN OUT
	EXISTING WOOD POWER POLE W/ TRANSFORMER
	EXISTING HANDICAPPED PARKING MARKING
	EXISTING BOLLARD
	EXISTING BBQ GRILL
	SET CONTROL POINT
	EXISTING TREE
	EXISTING CONCRETE SIDEWALK
	EXISTING CONCRETE PAVEMENT
	EXISTING ASPHALT
	EXISTING BUILDING

Note

A TPWD ARCHAEOLOGICAL INVESTIGATION WILL BE CONDUCTED PRIOR TO THE START OF CONSTRUCTION. IN THE EVENT THAT ANY ITEMS OF CULTURAL SIGNIFICANCE ARE ENCOUNTERED DURING CONSTRUCTION, STOP WORK IMMEDIATELY AND CONTACT DAVID KROSKIE, REGION 2 CULTURAL RESOURCES COORDINATOR: DAVID.KROSKIE@TPWD.TEXAS.GOV / 512–924–8953.

Existing Conditions Note

SURVEY WAS PERFORMED BY TEXAS PARKS & WILDLIFE ON MAY 23, 2020.

TEXAS PARKS & WILDLIFE

RICHTER ARCHITECTS

LAKE CORPUS CHRISTI STATE PARK
RESTROOM REPLACEMENT
PROJECT NUMBER 1210196A

DATE: 12/04/2020
DESIGNED BY: BB
DRAWN BY: MM
REVIEWED BY: TZ
REVISED:
REVISED:
REVISED:

STATE OF TEXAS
ERLATH W. ZUEHL III
89535
LICENSED PROFESSIONAL ENGINEER
12/4/20

shaping the built environment
JQ Infrastructure
JQ INFRASTRUCTURE, LLC
84 NE LOOP 410, SUITE 245
210.858.9803
SAN ANTONIO, TEXAS 78216
PROJECT NO: 4200119
TBPE FIRM 7986

SHEET TITLE
Existing Conditions Plan

SHEET NUMBER
C100

N

GRAPHIC SCALE

0 20 40

(IN FEET)
1 inch = 20 ft.

Legend

- SW — STRAW WATTLE, SEE DETAIL 1/C111
- TEMPORARY CONSTRUCTION FENCE
- TREE PROTECTION, SEE LANDSCAPE PLANS FOR DETAILS
- CONCRETE WASHOUT PIT, SEE DETAIL 2/C111
- STUCCO & PAINT WASHOUT PIT, SEE DETAIL 3/C111

Keynotes

1. STRAW WATTLE, SEE DETAIL 1/C111
2. TREE PROTECTION, SEE LANDSCAPE PLANS FOR DETAILS
3. CONCRETE WASHOUT PIT, SEE DETAIL 2/C111
4. STUCCO & PAINT WASHOUT PIT, SEE DETAIL 3/C111
5. JOB TRAILER, TO BE LOCATED AT CAMP SITE PAD
6. TEMPORARY CONSTRUCTION FENCE, CHAIN LINK RENTAL FENCE SHALL BE USED, PLACE STRAW WATTLE AT INSIDE BASE OF FENCE

Phasing/Traffic Control Note

SEE SHEET A1.1 FOR PHASING PLAN & TRAFFIC CONTROL PLAN

TEXAS PARKS & WILDLIFE

RICHTER ARCHITECTS

LAKE CORPUS CHRISTI STATE PARK
RESTROOM REPLACEMENT
PROJECT NUMBER 1210196A

DATE: 12/04/2020
DESIGNED BY: BB
DRAWN BY: MM
REVIEWED BY: TZ
REVISED:
REVISED:
REVISED:

STATE OF TEXAS
ERLATH W. ZUEHL III
89535
LICENSED PROFESSIONAL ENGINEER
12/4/20

SHEET TITLE
Erosion & Sediment Control Plan

SHEET NUMBER
C110

shaping the built environment
JQ Infrastructure
JQ INFRASTRUCTURE, LLC
84 NE LOOP 410, SUITE 245
SAN ANTONIO, TEXAS 78216
210.858.9803
PROJECT NO: 42001119
TBPE FIRM 7986

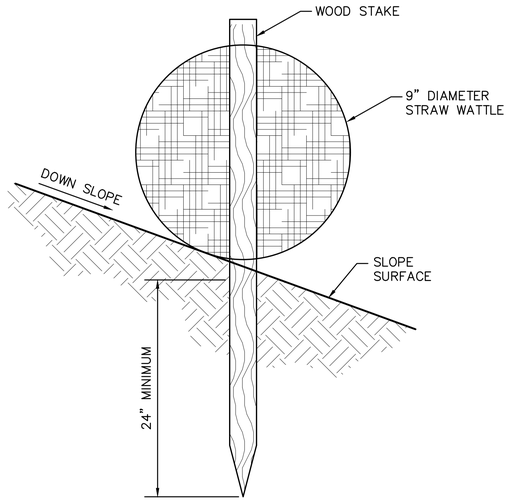

STRAW WATTLE PLACEMENT NOTE

PLACE STRAW WATTLE AT INSIDE BASE OF TEMPORARY CONSTRUCTION FENCE

1 STRAW WATTLE DETAIL
N.T.S.

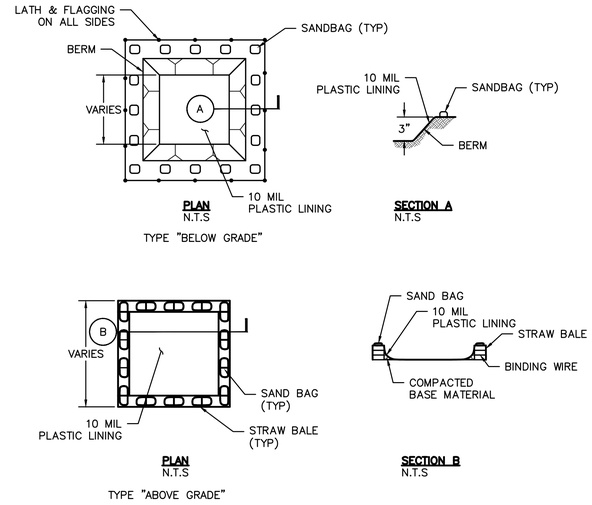

CONCRETE WASHOUT PIT NOTES:

1. ACTUAL LAYOUT DETERMINED IN THE FIELD.
2. CONTRACTOR TO PLACE AS MANY SAND BAGS AS NECESSARY TO ENSURE THE PLASTIC LINING REMAINS SECURE AT ALL TIMES.
3. LINER WILL BE REPLACED IF TORN OR DAMAGED.
4. PIT MUST BE USED ANYTIME CONCRETE IS BEING POURED AND WASHOUT IS OCCURRING.
5. REFER TO TCEQ MANUAL RG-348 FOR ADDITIONAL INFO REGARDING MATERIALS, INSTALLATION & MAINTENANCE ON THE BMP SHOWN ABOVE. THE MANUAL CAN BE FOUND ON-LINE AT: http://www.tceq.state.tx.us/comm_exec/forms_pubs/pubs/rg/rg-348/rg-348.html

2 CONCRETE WASHOUT PIT
N.T.S.

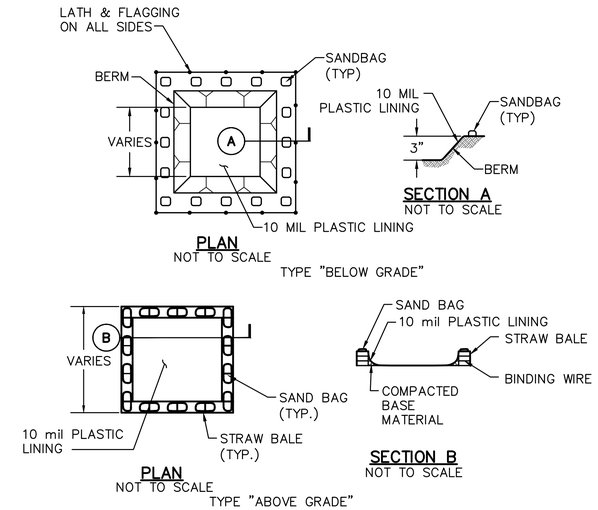

CONCRETE WASHOUT PIT NOTES:

1. ACTUAL LAYOUT DETERMINED IN THE FIELD.
2. CONTRACTOR TO PLACE AS MANY SAND BAGS AS NECESSARY TO ENSURE THE PLASTIC LINING REMAINS SECURE AT ALL TIMES.
3. LINER WILL BE REPLACED IF TORN OR DAMAGED.
4. PIT MUST BE USED ANYTIME PAINT OR STUCCO OPERATIONS ARE OCCURING AND WASHOUT IS OCCURRING.
5. REFER TO TCEQ MANUAL RG-348 FOR ADDITIONAL INFO REGARDING MATERIALS, INSTALLATION & MAINTENANCE ON THE BMP SHOWN ABOVE. THE MANUAL CAN BE FOUND ON-LINE AT:

3 PAINT AND STUCCO WASHOUT PIT
N.T.S.

TEXAS PARKS & WILDLIFE

RICHTER ARCHITECTS

LAKE CORPUS CHRISTI STATE PARK
RESTROOM REPLACEMENT
PROJECT NUMBER 1210196A

DATE: 12/04/2020
DESIGNED BY: BB
DRAWN BY: MM
REVIEWED BY: TZ
REVISED:
REVISED:
REVISED:

STATE OF TEXAS
ERLATH W. ZUEHL III
89535
LICENSED
PROFESSIONAL ENGINEER
12/4/20

SHEET TITLE
Erosion Control Details

SHEET NUMBER
C111

shaping the built environment
JQ Infrastructure
JQ INFRASTRUCTURE, LLC
84 NE LOOP 410, SUITE 245
210.858.9803
SAN ANTONIO, TEXAS 78216
PROJECT NO: 4200119
TBPE FIRM 7986

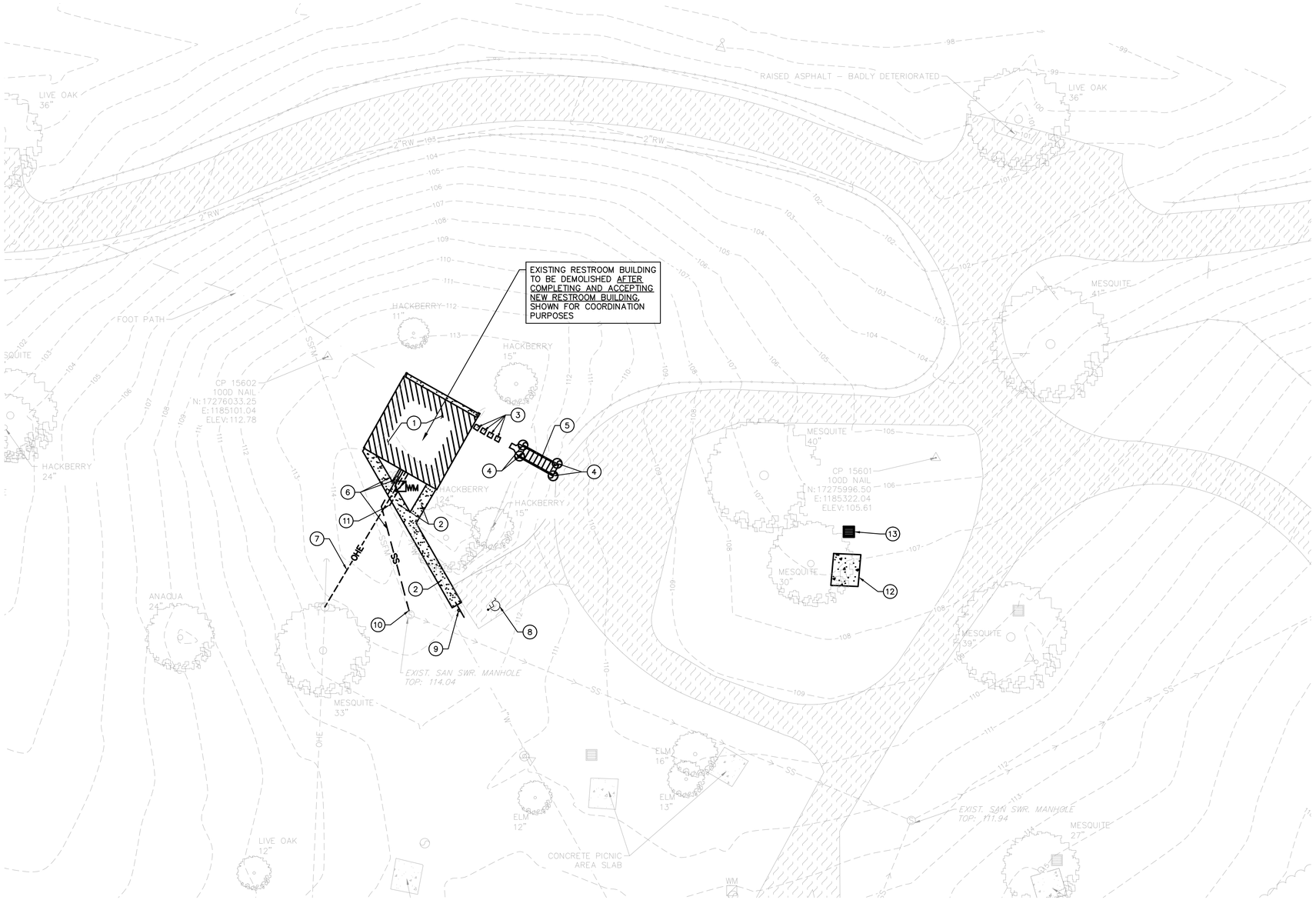

N

GRAPHIC SCALE

0 20 40

(IN FEET)
1 inch = 20 ft.

Legend

- EXISTING CONCRETE SIDEWALK TO BE REMOVED
- EXISTING ASPHALT TO BE REMOVED
- EXISTING BUILDING TO BE DEMOLISHED
- EXISTING TREE TO REMAIN

Tree Demolition/Protection Note

NO TREES ARE TO BE REMOVED AS PART OF THIS PROJECT, REFER TO SHEET C110 FOR LOCATION OF TREE PROTECTION. TREE PROTECTION SHALL BE PROVIDED AS SHOWN ON THE DRAWINGS AND MAINTAINED FOR THE DURATION OF THE PROJECT. REFER TO LANDSCAPE PLANS & SPECIFICATIONS FOR DETAILS.

Phasing/Traffic Control Note

SEE SHEET A1.1 FOR PHASING PLAN & TRAFFIC CONTROL PLAN

Site Demolition Plan Notes

1. SURVEY WAS PERFORMED BY TEXAS PARKS & WILDLIFE ON MAY 23, 2020.
2. CONTRACTOR IS RESPONSIBLE FOR VERIFYING THE LOCATION OF ALL UNDERGROUND UTILITIES WITHIN THE AREA OF CONSTRUCTION.
3. IT WILL BE THE RESPONSIBILITY OF THE CONTRACTOR TO PROTECT ALL MANHOLES, CLEANOUTS, VALVE BOXES, FIRE HYDRANTS, ETC. WITHIN THE AREA OF CONSTRUCTION.
4. ALL TRAFFIC CONTROL MEASURES, BARRICADES AND PROJECT SIGNS WITHIN THE PUBLIC RIGHT–OF–WAY SHALL CONFORM TO TEXAS DEPARTMENT OF TRANSPORTATION MANUAL OF UNIFORM TRAFFIC CONTROL DEVICES AND THE LOCAL GOVERNING AGENCY REQUIREMENTS.
5. PROVIDE EROSION AND SEDIMENTATION CONTROLS AS SHOWN ON THE DRAWINGS AND MAINTAIN FOR THE DURATION OF THE PROJECT, PROVIDE ROUTINE MAINTENANCE AS REQUIRED BY THE SWPPP PLAN TO MAINTAIN THE INTEGRITY OF CONTROLS AND PROTECTION MEASURES AND REMOVE ANY ACCUMULATIONS OF MUD, SILT AND DEBRIS, WHICH WOULD JEOPARDIZE THE INTEGRITY OF THE CONTROL MEASURES. REFER TO DRAWINGS FOR DETAILS.
6. CONTRACTOR SHALL EXERCISE CARE DURING OPERATIONS TO CONFINE DUST TO THE IMMEDIATE WORK AREA AND SHALL EMPLOY DUST CONTROL MEASURES TO ENSURE ADEQUATE DUST CONTROL THROUGHOUT DEMOLITION AND CONSTRUCTION OPERATIONS.
7. THE CONTRACTOR SHALL PROTECT ALL ADJACENT ON AND OFF–SITE PAVING, UTILITIES, TREES AND OTHER EXISTING IMPROVEMENTS FROM DAMAGE. ANY DAMAGE SHALL BE REPAIRED AT THE CONTRACTOR'S EXPENSE.
8. EXPOSED SUBGRADE BENEATH PAVED AREAS SHALL BE PROOF ROLLED TO DETECT WEAK SOIL SUPPORT AREAS. THESE AREAS WILL BE REMOVED AND REPLACED WITH SITE EXCAVATED MATERIALS OR IMPORTED MATERIALS HAVING THE SAME PROPERTIES AS SITE MATERIALS.
9. REMOVE ALL TRACES OF DEMOLISHED ITEMS FROM THE SITE WORK AREA AND ROUGH GRADE AND RE–VEGETATE ALL AREAS THAT HAVE BEEN DISTURBED. ALL REMOVED ITEMS SHALL BE LEGALLY DISPOSED OF OFF–SITE AT NO ADDITIONAL COST TO THE OWNER.
10. REFER TO LANDSCAPE DRAWINGS FOR TREE DEMOLITION AND PROTECTION.
11. EXISTING SANITARY SEWER AND WATER UTILITY LINES ARE TO REMAIN IN SERVICE AT ALL TIMES. CONTRACTOR TO MAKE PROVISIONS TO KEEP THESE UTILITIES IN SERVICE. ALL PROPOSED SHUT DOWNS OF UTILITIES MUST BE COORDINATED WITH THE OWNER.
12. REFER TO DEMOLITION ITEMS OF OTHER DISCIPLINES WITHIN THOSE DISCIPLINES' DOCUMENTS FOR COORDINATION.

Keynotes

1. EXISTING BUILDING TO BE REMOVED, AFTER NEW RESTROOM CONSTRUCTION IS COMPLETE AND APPROVED
2. EXISTING CONCRETE SIDEWALK TO BE REMOVED, AFTER NEW RESTROOM CONSTRUCTION IS COMPLETE AND APPROVED
3. EXISTING CONCRETE PAVERS TO BE REMOVED, AFTER NEW RESTROOM CONSTRUCTION IS COMPLETE AND APPROVED
4. EXISTING BOLLARDS TO BE REMOVED, AFTER NEW RESTROOM CONSTRUCTION IS COMPLETE AND APPROVED
5. EXISTING CONCRETE STAIRS TO BE REMOVED, AFTER NEW RESTROOM CONSTRUCTION IS COMPLETE AND APPROVED
6. EXISTING SANITARY & WATER SERVICE LINES TO BE CAPPED AND REMOVED AFTER DEMOLITION OF EXISTING RESTROOM BUILDING
7. REFERENCE ELECTRICAL PLANS FOR PHASING OF ELECTRICAL SERVICE REMOVAL
8. BLACK OUT EXISTING PAVEMENT MARKINGS IN EXISTING ACCESSIBLE PARKING SPACE
9. EXISTING ACCESSIBLE PARKING SIGN TO BE REMOVED AND RETURNED TO OWNER
10. CAP AND REMOVE EXISTING SANITARY SEWER 5' OUTSIDE MANHOLE
11. CAP AND REMOVE EXISTING WATER LINE TO BEND AS ALLOWED BY CONNECTION OF NEW WATER LINE
12. EXISTING CONCRETE PAD TO BE REMOVED, IF DEDUCTIVE BID ALTERNATE 2 IS NOT SELECTED
13. EXISTING GRILL TO BE REMOVED AND RETURNED TO OWNER, IF DEDUCTIVE BID ALTERNATE 2 IS NOT SELECTED

TEXAS PARKS & WILDLIFE

RICHTER ARCHITECTS

LAKE CORPUS CHRISTI STATE PARK
RESTROOM REPLACEMENT
PROJECT NUMBER 1210196A

DATE: 12/04/2020
DESIGNED BY: BB
DRAWN BY: MM
REVIEWED BY: TZ
REVISED:
REVISED:
REVISED:

STATE OF TEXAS
ERLATH W. ZUEHL III
89535
LICENSED PROFESSIONAL ENGINEER
12/4/20

shaping the built environment
JQ Infrastructure
JQ INFRASTRUCTURE, LLC
84 NE LOOP 410, SUITE 245
210.858.9803
SAN ANTONIO, TEXAS 78216
PROJECT NO: 4200119
TBPE FIRM 7986

SHEET TITLE
Demolition Plan

SHEET NUMBER
C120

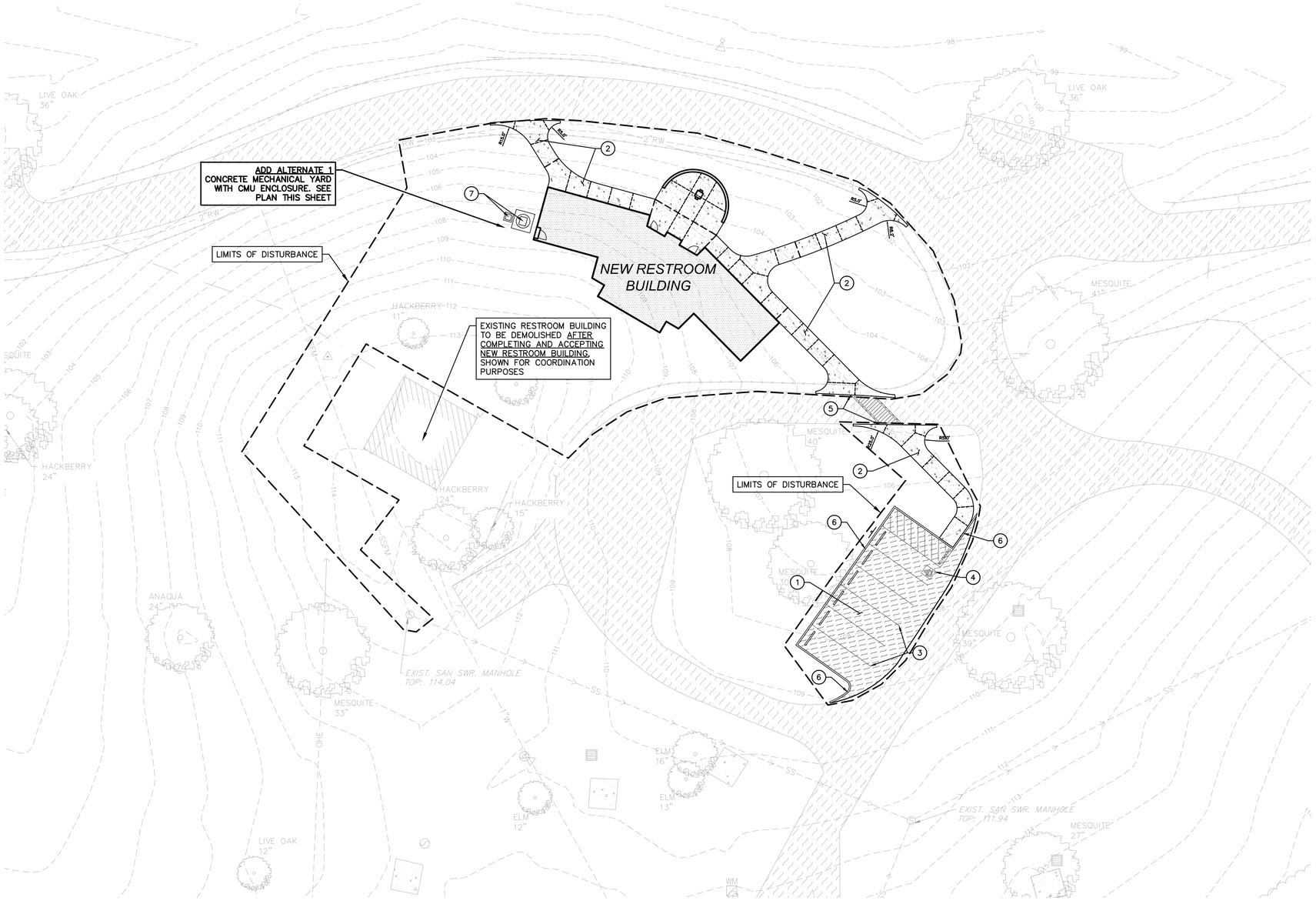

N

GRAPHIC SCALE

0 20 40

(IN FEET)
1 inch = 20 ft.

Legend

- NEW CONCRETE SIDEWALK, SEE DETAIL 4/C510
- NEW ASPHALT PAVEMENT, SEE DETAIL 1/C510
- NEW BUILDING
- CONTROL JOINT
- EXPANSION JOINT
- EXISTING TREE TO REMAIN

Keynotes

1. NEW ASPHALT PAVEMENT, SEE DETAIL 1/C510
2. NEW CONCRETE SIDEWALK, SEE DETAIL 4/C510
3. NEW PAVEMENT MARKING (TYP), SEE DETAIL 5/C510
4. NEW VAN ACCESSIBLE PARKING, SEE DETAIL 1/C511
5. NEW CROSSWALK, SEE DETAIL 3/C510
6. NEW CONCRETE FLUSH CURB, SEE DETAIL 2/C510
7. NEW LIFT STATION, SEE SHEET C150

Tree Demolition/Protection Note

NO TREES ARE TO BE REMOVED AS PART OF THIS PROJECT, REFER TO SHEET C110 FOR LOCATION OF TREE PROTECTION. TREE PROTECTION SHALL BE PROVIDED AS SHOWN ON THE DRAWINGS AND MAINTAINED FOR THE DURATION OF THE PROJECT. REFER TO LANDSCAPE PLANS & SPECIFICATIONS FOR DETAILS.

Phasing/Traffic Control Note

SEE SHEET A1.1 FOR PHASING PLAN & TRAFFIC CONTROL PLAN

Paving & Site Plan Notes

1. SURVEY WAS PERFORMED BY TEXAS PARKS & WILDLIFE ON MAY 23, 2020.
2. ALL PARKING STRIPING SHALL BE 4" WIDE UNLESS OTHERWISE NOTED.
3. INSTALLATION AND PLACEMENT OF IRRIGATION SLEEVES AND UTILITY CONDUITS SHALL BE IN ACCORDANCE TO THE ARCHITECT'S LANDSCAPE PLANS AND/OR MEP PLANS.
4. SIDEWALKS SHALL HAVE A SLOPE NO GREATER THAN 5% AND A CROSS SLOPE NOT GREATER THAN 2%, UNLESS OTHERWISE NOTED.
5. SAWED JOINTS SHALL BE SPACED AT INTERVALS OF 15 FEET MAXIMUM AND AT ALL RADIUS RETURNS. SAWED JOINTS SHALL BE PERPENDICULAR TO ALL CURVES. JOINTS SHALL BE SAWED WITHIN 12 HOURS AFTER CONCRETE IS POURED.
6. SAWED JOINTS SHALL MATCH THE EXISTING PAVEMENT JOINT PATTERN WHERE NEW PAVEMENT IS CONSTRUCTED ADJACENT TO EXISTING CONCRETE PAVEMENT.
7. ALL MANHOLES, INLETS, LIGHT BASES, AND OTHER STRUCTURES SHALL BE ISOLATED FROM THE NEW PAVEMENT WITH PREFORMED ASPHALTIC EXPANSION MATERIAL.
8. ADJUST EXISTING TOP OF MANHOLE RIMS AND EXISTING WATERLINE VALVE BOXES TO FINISHED GRADE ELEVATIONS.
9. ALL CONCRETE PAVING SHALL BE BROOM FINISH.
10. NEW IRRIGATION SLEEVES SHOWN HEREON ARE FOR REFERENCE ONLY AND SHOULD BE CONSIDERED APPROXIMATE. REFER TO LANDSCAPE DRAWINGS FOR EXACT LOCATIONS.

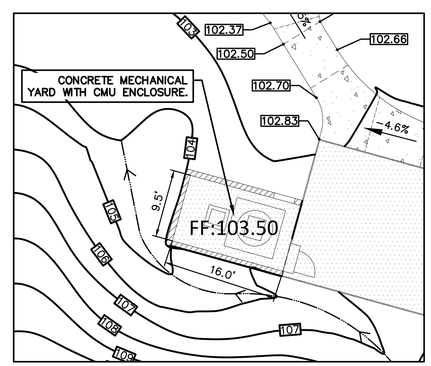

Add. Alternate 1 - Mechanical Yard

1"=10'

TEXAS PARKS & WILDLIFE

RICHTER ARCHITECTS

LAKE CORPUS CHRISTI STATE PARK
RESTROOM REPLACEMENT
PROJECT NUMBER 1210196A

DATE: 12/04/2020
DESIGNED BY: BB
DRAWN BY: MM
REVIEWED BY: TZ
REVISED:
REVISED:
REVISED:

STATE OF TEXAS
ERLATH W. ZUEHL III
89535
LICENSED PROFESSIONAL ENGINEER
12/4/20

SHEET TITLE
Site & Paving Plan

SHEET NUMBER
C130

shaping the built environment
JQ Infrastructure
JQ INFRASTRUCTURE, LLC
84 NE LOOP 410, SUITE 245
210.858.9803
SAN ANTONIO, TEXAS 78216
PROJECT NO: 4200119
TBPE FIRM 7986

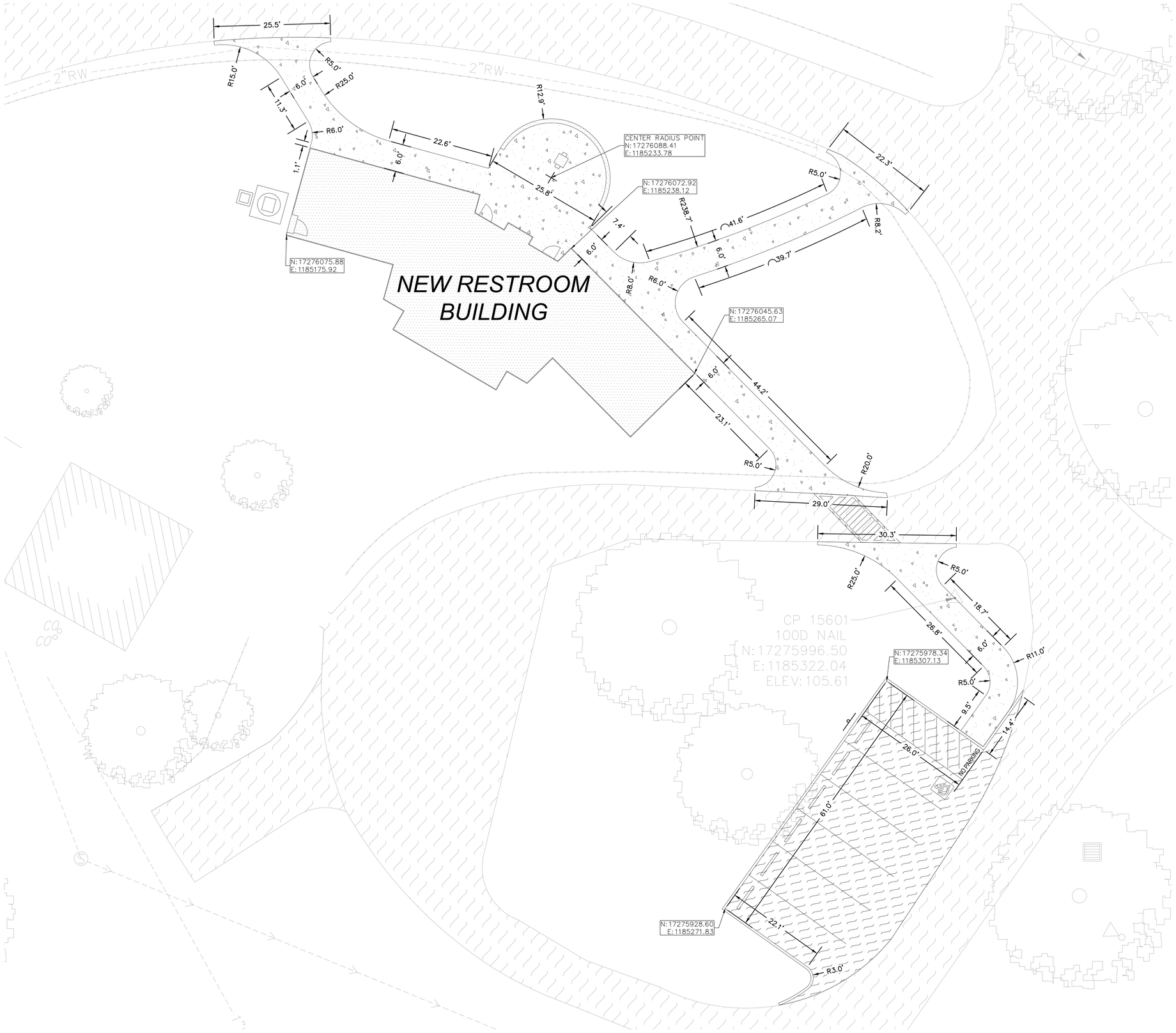

N

GRAPHIC SCALE

0 20 40

(IN FEET)
1 inch = 20 ft.

TEXAS PARKS & WILDLIFE

RICHTER ARCHITECTS

LAKE CORPUS CHRISTI STATE PARK
RESTROOM REPLACEMENT
PROJECT NUMBER 1210196A

Dimension Control Notes

1. SURVEY WAS PERFORMED BY TEXAS PARKS & WILDLIFE ON MAY 23, 2020.
2. CONTRACTOR SHALL IMMEDIATELY NOTIFY THE ENGINEER OF ANY QUESTIONS THAT MAY ARISE CONCERNING THE INTENT, PLACEMENT, OR LIMITS OF DIMENSIONS OR GRADES NECESSARY FOR CONSTRUCTION OF THIS PROJECT.
3. CONTRACTOR SHALL VERIFY COORDINATES PRIOR TO BEGINNING WORK.
4. THE CONTRACTOR SHALL BE RESPONSIBLE FOR FURNISHING AND MAINTAINING ALL SIGNS, BARRICADES, AND LIGHTING OR WARNING DEVICE(S) USED/REQUIRED WITH THIS WORK.
5. ALL CURB DIMENSIONS ARE FROM FACE OF CURB UNLESS OTHERWISE NOTED.
6. ALL BUILDING DIMENSIONS ARE TO FACE OF BUILDING. REFER TO ARCHITECTURAL PLANS FOR BUILDING DIMENSIONS.
7. REFER TO LANDSCAPE ARCHITECT PLANS FOR DETAILS AND DIMENSIONS OF LANDSCAPE HARDSCAPE AREAS.
8. ALL UNLABELED CURB RADII ARE 2.0 FEET.

DATE: 12/04/2020
DESIGNED BY: BB
DRAWN BY: MM
REVIEWED BY: TZ
REVISED:
REVISED:
REVISED:

STATE OF TEXAS
ERLATH W. ZUEHL III
89635
LICENSED PROFESSIONAL ENGINEER
12/4/20

SHEET TITLE
Dimensional Control Plan

SHEET NUMBER
C131

shaping the built environment

JQ INFRASTRUCTURE, LLC
84 NE LOOP 410, SUITE 245
210.858.9803
SAN ANTONIO, TEXAS 78216
PROJECT NO: 4200119
TBPE FIRM 7986

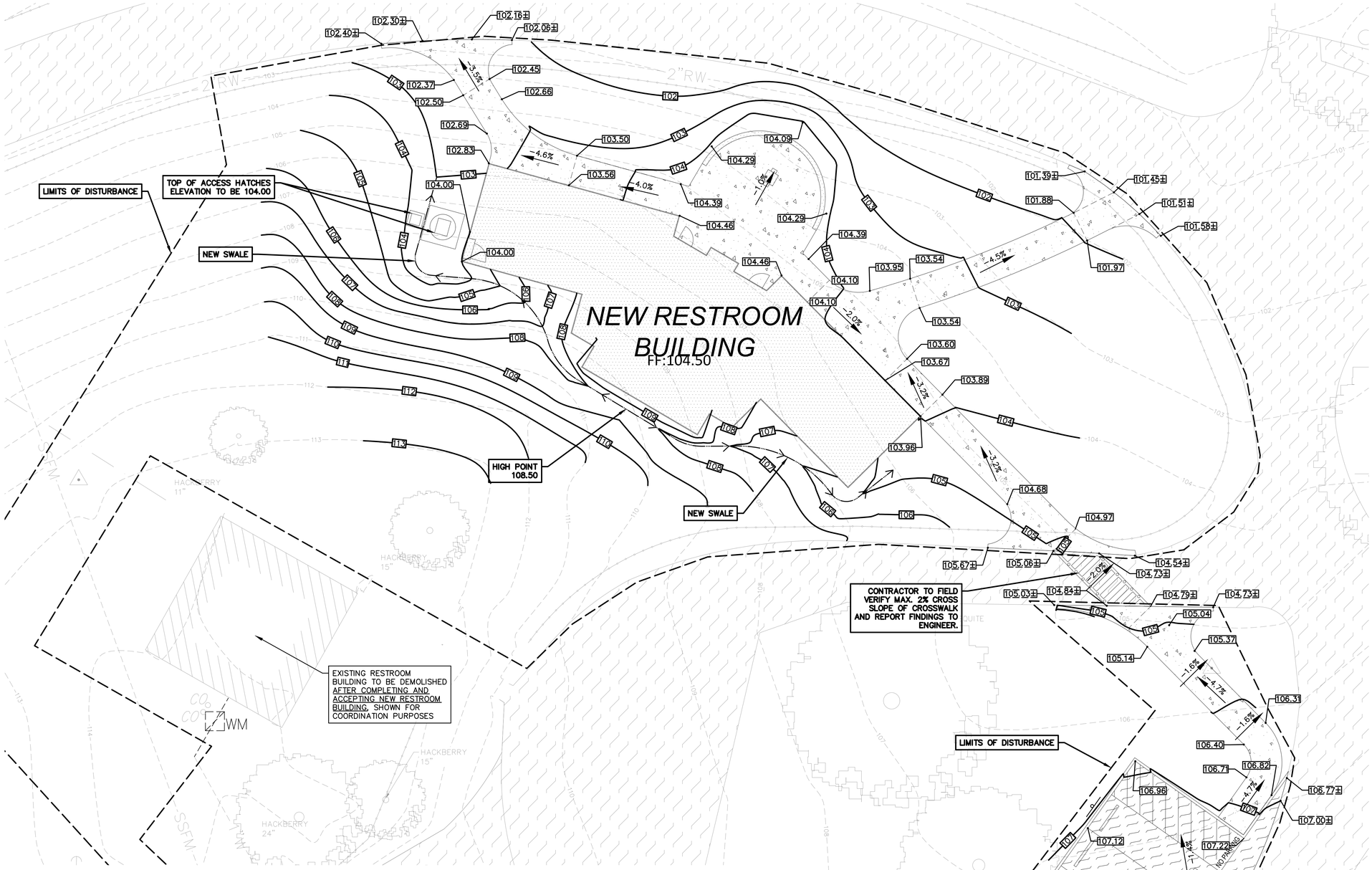

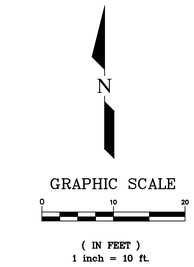

Legend

478	EXISTING CONTOUR AND ELEVATION
478	PROPOSED CONTOUR AND ELEVATION
	PROPOSED 4' WIDE SWALE
	PROPOSED GRADE BREAK
477.09	MATCH EXISTING ELEVATION
477.09	PROPOSED SPOT GRADE
FF:411.00	FINISHED FLOOR ELEVATION

Note

APPROXIMATE DEPTH OF SOIL DISTURBANCE IS 6'

Grading Plan Notes

1. SURVEY WAS PERFORMED BY TEXAS PARKS & WILDLIFE ON MAY 23, 2020.
2. POSITIVE DRAINAGE SHALL BE MAINTAINED ON ALL SURFACE AREAS WITHIN THE SCOPE OF THIS PROJECT. DRAINAGE SHALL BE DIRECTED AWAY FROM ALL BUILDING FOUNDATIONS. CONTRACTOR SHOULD TAKE PRECAUTIONS NOT TO ALLOW ANY PONDING OF WATER.
3. NO ABRUPT CHANGE OF GRADE SHALL OCCUR IN THE DRIVEWAYS, PARKING AREAS OR SIDEWALKS.
4. UTILITIES SHOWN ON THE PLANS ARE FROM THE BEST INFORMATION SOURCES AVAILABLE AT THE TIME OF DESIGN BUT MAY NOT REPRESENT ALL EXISTING UTILITIES ON SITE. THE CONTRACTOR WILL BE RESPONSIBLE FOR DETERMINING THE EXACT LOCATION OF ALL UTILITIES AND DRAINAGE STRUCTURES WHETHER SHOWN ON THE PLANS OR NOT. THE CONTRACTOR SHALL UNCOVER EXISTING UTILITIES PRIOR TO CONSTRUCTION TO VERIFY SIZE, GRADE AND LOCATION. THE CONTRACTOR SHALL NOTIFY THE ENGINEER IMMEDIATELY OF ANY DEVIATIONS FROM THE PLANS PRIOR TO BEGINNING CONSTRUCTION. ANY DAMAGE TO EXISTING UTILITIES, WHETHER SHOWN ON THE PLAN OR NOT, SHALL BE THE CONTRACTOR'S RESPONSIBILITY TO REPAIR, AT HIS OWN EXPENSE.
5. CONTRACTOR SHALL IMMEDIATELY NOTIFY THE ENGINEER OF ANY QUESTIONS THAT MAY ARISE CONCERNING THE INTENT, PLACEMENT, OR LIMITS OF DIMENSIONS OR GRADES NECESSARY FOR CONSTRUCTION OF THIS PROJECT.
6. ALL CONSTRUCTION AREAS WITHIN THE SITE SHALL BE STRIPPED OF VEGETATION AND LOOSE TOPSOIL. ANY POCKETS OF DEBRIS ENCOUNTERED SHOULD ALSO BE REMOVED.
7. REFER TO GEOTECHNICAL REPORT FOR FILL COMPACTION AND MOISTURE CONTENT REQUIREMENTS.
8. CONTRACTOR SHALL TAKE ALL NECESSARY PRECAUTIONS (USE OF SILT FENCES, ETC.) TO KEEP DRAINAGE AND SILT FROM WASHING ONTO ADJACENT PROPERTY OR CROSSING ADJACENT STREETS. CONTRACTOR SHALL IMEDIATELY REMOVE SILT/DEBRIS THAT WASH OFFSITE OR INTO EXISTING STORM DRAIN SYSTEMS.
9. IT WILL BE THE RESPONSIBILITY OF THE CONTRACTOR TO PROTECT ALL MANHOLES, CLEANOUTS, VALVE BOXES, FIRE HYDRANTS, ETC. WITHIN THE AREA OF CONSTRUCTION. THEY MUST BE ADJUSTED TO PROPER LINE AND GRADE BY THE CONTRACTOR PRIOR TO AND AFTER THE PLACING OF PAVING AND GRADING AT NO ADDITIONAL COST TO THE OWNER.
10. SIDEWALKS SHALL HAVE A SLOPE NO GREATER THAN 5% AND A CROSS SLOPE NOT GREATER THAN 2%, UNLESS OTHERWISE NOTED.

TEXAS PARKS & WILDLIFE

RICHTER ARCHITECTS

LAKE CORPUS CHRISTI STATE PARK
RESTROOM REPLACEMENT
PROJECT NUMBER 1210196A

DATE: 12/04/2020
DESIGNED BY: BB
DRAWN BY: MM
REVIEWED BY: TZ
REVISED:
REVISED:
REVISED:

STATE OF TEXAS
ERLATH W. ZUEHL III
89535
LICENSED PROFESSIONAL ENGINEER
12/4/20

SHEET TITLE
Grading Plan

SHEET NUMBER
C140

shaping the built environment
JQ Infrastructure
JQ INFRASTRUCTURE, LLC
84 NE LOOP 410, SUITE 245
210.858.9803
SAN ANTONIO, TEXAS 78216
PROJECT NO: 4200119
TBPE FIRM 7986

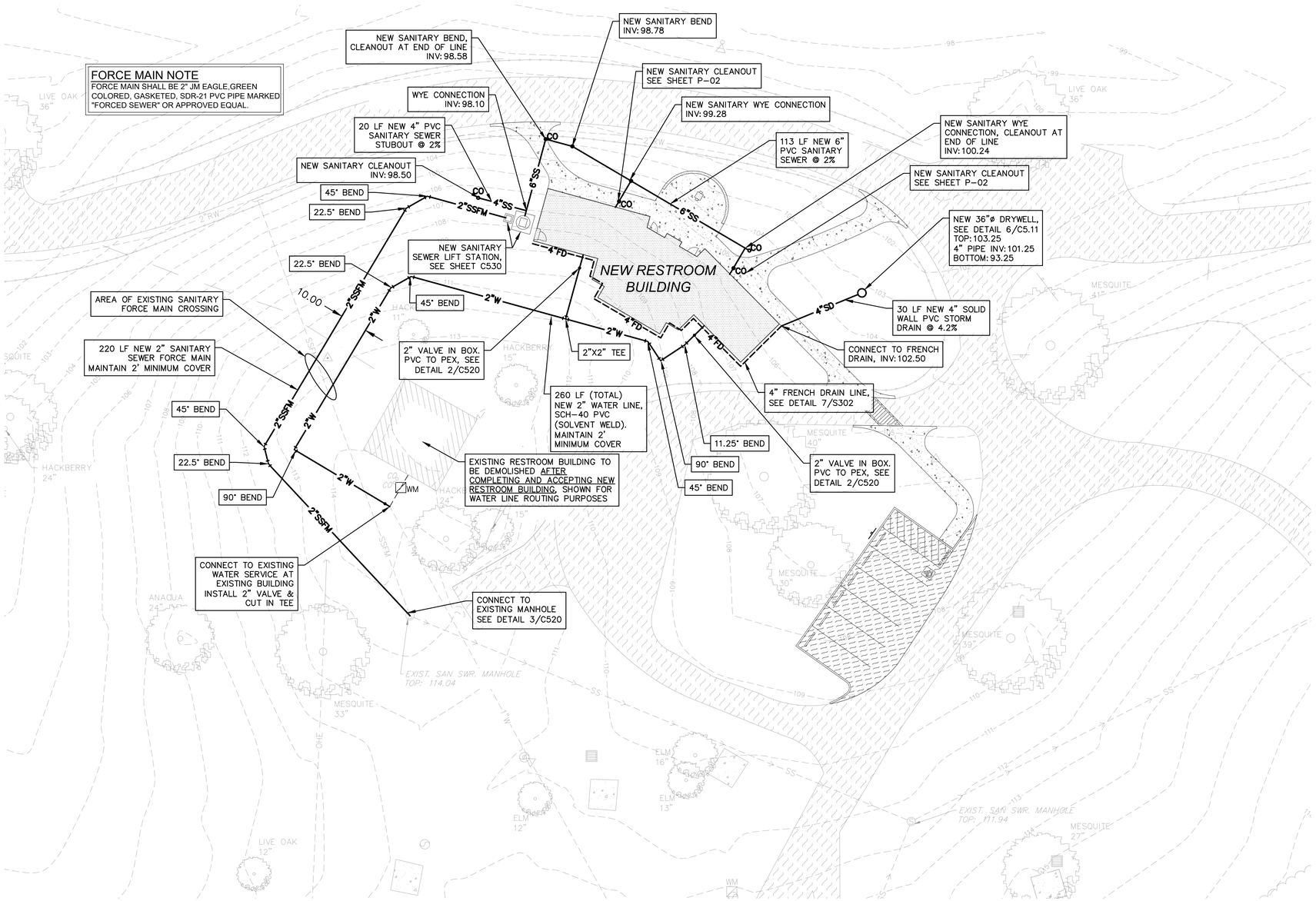

N

GRAPHIC SCALE

0 20 40

(IN FEET)
1 inch = 20 ft.

Legend

—— W ——	PROP. WATER LINE
—— SSFM ——	PROP. SANITARY SEWER FORCE MAIN

Utility Plan Notes

1. SURVEY WAS PERFORMED BY TEXAS PARKS & WILDLIFE ON MAY 23, 2020.
2. THE HORIZONTAL AND VERTICAL LOCATION OF EXISTING SUBSURFACE UTILITIES HAVE BEEN DETERMINED FROM DATA RECORDED BY OTHERS AND THE BEST INFORMATION SOURCES AVAILABLE AT THE TIME OF DESIGN. FIELD DATA IS LIMITED TO THAT WHICH IS VISIBLE AND CAN BE MEASURED. THIS DOES NOT PRECLUDE THE EXISTENCE OF OTHER UNDERGROUND ITEMS. THE COMPLETENESS AND/OR ACCURACY OF THESE RECORDS CANNOT BE GUARANTEED, EXCEPT INSOFAR AS THEY CAN BE VERIFIED BY THE FIELD MEASUREMENT. IT SHALL BE THE RESPONSIBILITY OF THE CONTRACTOR TO UNCOVER AND VERIFY THE ACTUAL DEPTH AND CONDITION OF ALL AFFECTED UNDERGROUND UTILITIES WITHIN THE AREA OF CONSTRUCTION PRIOR TO BEGINNING THE ACTUAL WORK.
3. REMOVE FROM THE SITE ALL SURFACE FEATURES AND UTILITIES INDICATED ON THE DRAWINGS TO BE DEMOLISHED OR REMOVED. BACKFILL TRENCHES EXCAVATED FOR UTILITY REMOVAL.
4. THE CONTRACTOR IS RESPONSIBLE FOR ANY AND ALL DAMAGE TO EXISTING UTILITIES THAT ARE TO REMAIN AND THE CONTRACTOR SHALL REPAIR ALL DAMAGED UTILITIES TO THEIR ORIGINAL CONDITION AT NO COST TO THE OWNER.
5. SUBMIT TO THE ARCHITECT/ENGINEER AND OWNER'S DESIGNATED REPRESENTATIVE A TRENCH SAFETY PLAN SEALED BY A PROFESSIONAL ENGINEER LICENSED IN THE STATE OF TEXAS. THIS PLAN SHALL MEET OSHA REQUIREMENTS. CONTRACTOR SUBMITTAL SHALL INCLUDE A TRENCH SAFETY PLAN IN COMPLIANCE WITH TEXAS HOUSE BILL 1569 AND MUST BE RECEIVED BEFORE BEGINNING WORK ON THE PROJECT.
6. ALL WATER AND SANITARY SEWER PIPES MUST BE INSTALLED AND TESTED ACCORDING TO TEXAS COMMISSION ON ENVIRONMENTAL QUALITY (TCEQ).
7. CONTRACTOR SHALL VERIFY ALL EXISTING SANITARY SEWER FLOW LINES BEFORE BEGINNING CONSTRUCTION.
8. ALL SANITARY SEWER PIPING SHALL BE SDR 26 AT MINIMUM.
9. SANITARY SEWER SERVICE LINES TO BUILDINGS SHALL BE PROVIDED WITH CLEANOUTS NOT MORE THAN 100 FEET APART.
10. ALL MANHOLES, FIRE HYDRANTS, VALVE BOXES, ETC LOCATED IN THE GRASS SHALL HAVE A 12" MOW STRIP AROUND IT.
11. WHEN WATER LINES ARE INSTALLED IN THE VICINITY OF SEWER MAINS, SUCH INSTALLATION SHALL BE IN STRICT ACCORDANCE WITH THE TEXAS DEPARTMENT OF HEALTH "RULES AND REGULATIONS FOR PUBLIC WATER SYSTEMS" (1988 OR ANY REVISION THERETO)

TEXAS PARKS & WILDLIFE

RICHTER ARCHITECTS

LAKE CORPUS CHRISTI STATE PARK
RESTROOM REPLACEMENT
PROJECT NUMBER 1210196A

DATE: 12/04/2020
DESIGNED BY: BB
DRAWN BY: MM
REVIEWED BY: TZ
REVISED:
REVISED:
REVISED:

STATE OF TEXAS
ERLATH W. ZUEHL III
89535
LICENSED PROFESSIONAL ENGINEER
12/4/20

SHEET TITLE
Utility Plan

SHEET NUMBER
C150

shaping the built environment
JQ Infrastructure
JQ INFRASTRUCTURE, LLC
84 NE LOOP 410, SUITE 245
SAN ANTONIO, TEXAS 78216
210.858.9803
PROJECT NO: 4200119
TBPE FIRM 7986

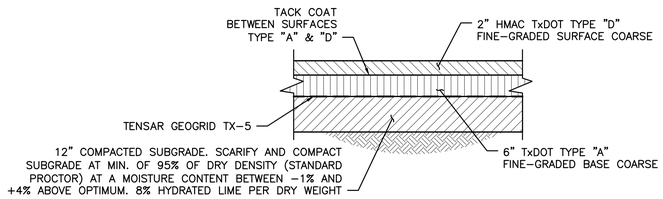

1 ASPHALT PAVEMENT SECTION
N.T.S.

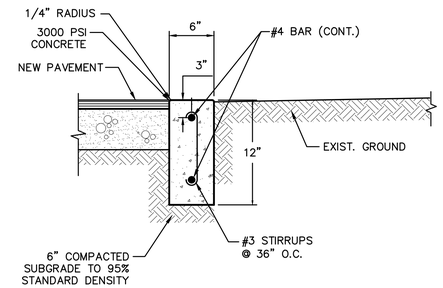

2 FLUSH CURB DETAIL
N.T.S.

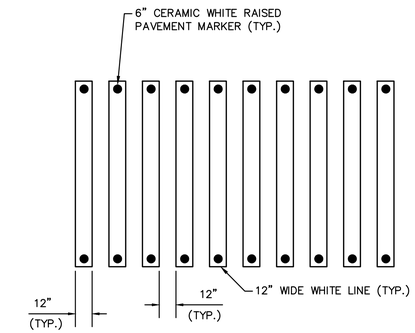

3 CROSSWALK DETAIL
N.T.S.

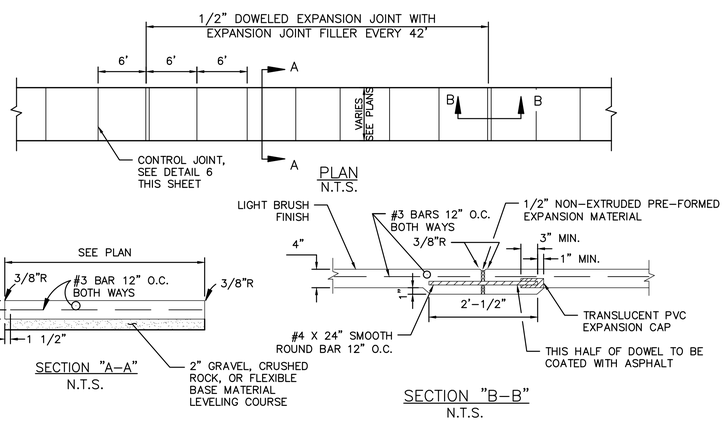

NOTE:
1. CROSS SLOPE OF SIDEWALK SHALL BE 1:50 MAXIMUM.
2. SEE PLANS FOR WIDTH.
3. SIDEWALK SHALL BE 4" 4000 PSI CONCRETE UNLESS OTHERWISE SPECIFIED BY OWNER.
4. ALL HONEYCOMB IN BACK OF CURB TO BE TROWEL-PLASTERED BEFORE POURING SIDEWALK.
5. LUG MAY BE FORMED BY SHAPING SUBGRADE TO APPROXIMATE DIMENSIONS SHOWN.
6. DOWEL INTO EXISTING SIDEWALK WITH 24" NO.4 @ 12" ON CENTER.
7. REFERENCE LANDSCAPE DRAWINGS FOR ADDITIONAL INFORMATION.
8. SIDEWALKS LESS THAN 5 FEET IN WIDTH SHALL BE PROVIDED WITH A PASSING SPACE AT A MAXIMUM SPACING OF 200 FEET.
9. ALL JOINTS TO BE SEALED.

4 REINFORCE CONCRETE SIDEWALK
N.T.S.

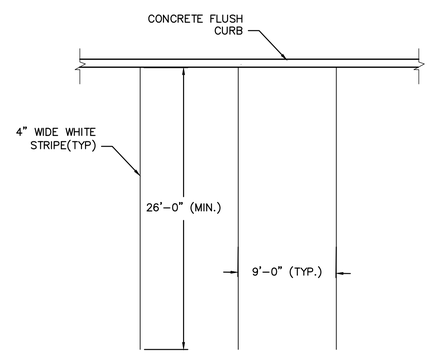

5 PARKING STRIPE
N.T.S.

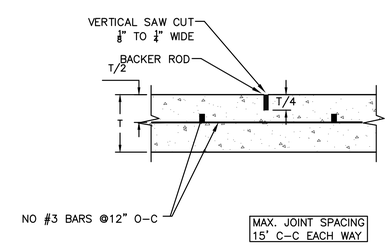

6 SAWED DUMMY (CONTROL) JOINT
N.T.S.

TEXAS PARKS & WILDLIFE

RICHTER ARCHITECTS

LAKE CORPUS CHRISTI STATE PARK
RESTROOM REPLACEMENT
PROJECT NUMBER 1210196A

DATE: 12/04/2020
DESIGNED BY: BB
DRAWN BY: MM
REVIEWED BY: TZ
REVISED:
REVISED:
REVISED:

STATE OF TEXAS
ERLAH W. ZUEHL III
89535
LICENSED
PROFESSIONAL ENGINEER
12/4/20

SHEET TITLE
Civil Details

SHEET NUMBER
C510

shaping the built environment
JQ Infrastructure
JQ INFRASTRUCTURE, LLC
84 NE LOOP 410, SUITE 245
210.858.9803
SAN ANTONIO, TEXAS 78216
PROJECT NO: 4200119
TBPE FIRM 7986

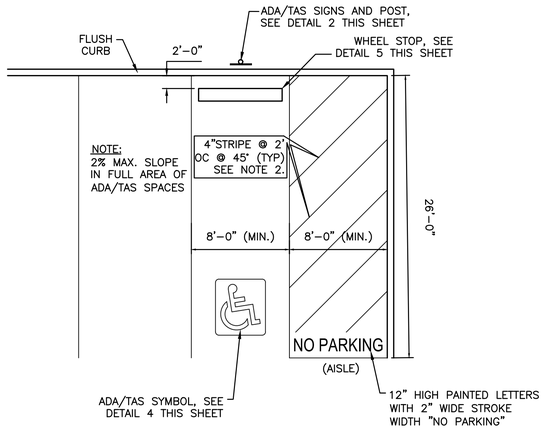

NOTE:
1. ALL WALKWAYS, RAMPS, HANDICAP PARKING SIGNAGE, ETC. SHALL MEET APPROVED ADA/TAS STANDARDS.
2. ALL STRIPING WITHIN ADA/TAS SPACES TO BE BLUE TRAFFIC PAINT.

1 ACCESSIBLE PARKING LAYOUT
N.T.S.

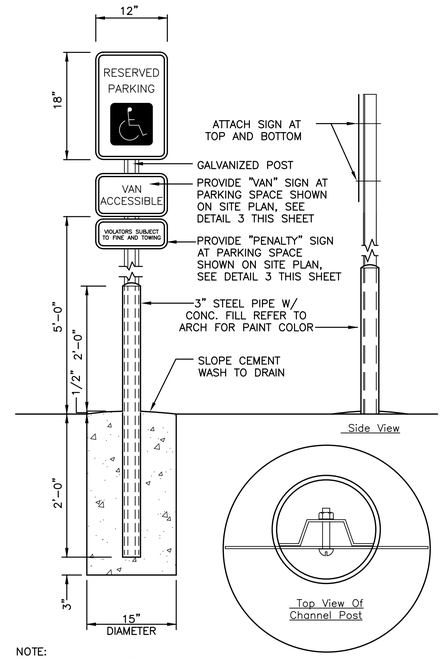

NOTE:
SIGNS TO BE LOCATED AT EACH HC. PARKING SPACE EMBLEM SIZE, COLOR AND EXACT LOCATION WITHIN PARKING SPACE TO COMFORM TO LOCAL GOVERNING CODES. SEE DETAIL 3/ THIS SHEET.

2 ACCESSIBLE PARKING SIGNAGE
N.T.S.

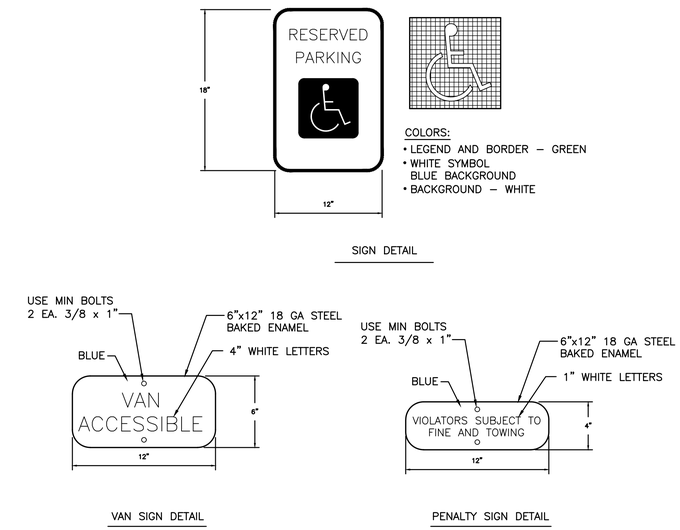

3 ADA/TAS SIGNAGE DETAIL
N.T.S.

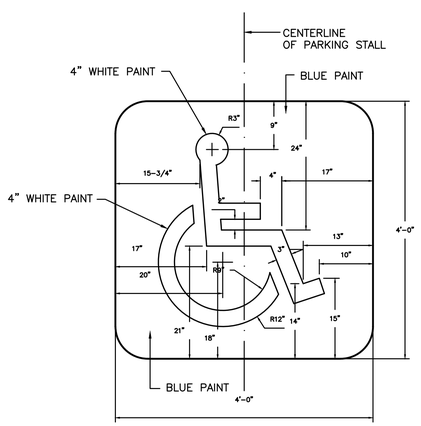

4 PARKING SPACE ACCESSIBLE SYMBOL DETAIL
N.T.S.

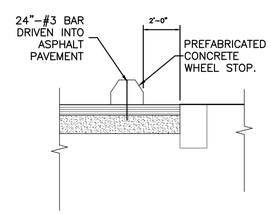

5 WHEEL STOP DETAIL
N.T.S.

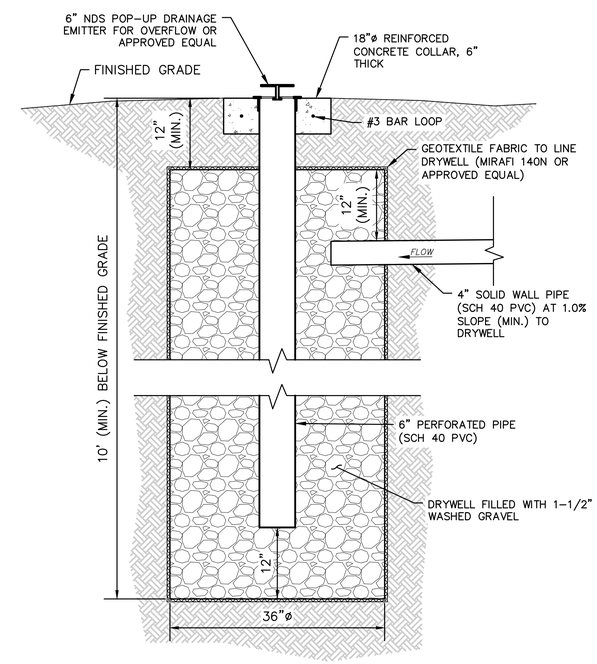

6 DRYWELL DETAIL
N.T.S.

TEXAS PARKS & WILDLIFE

RICHTER ARCHITECTS

LAKE CORPUS CHRISTI STATE PARK
RESTROOM REPLACEMENT
PROJECT NUMBER 1210196A

DATE: 12/04/2020
DESIGNED BY: BB
DRAWN BY: MM
REVIEWED BY: TZ
REVISED:
REVISED:
REVISED:

STATE OF TEXAS
ERLATH W. ZUEHL III
89535
LICENSED PROFESSIONAL ENGINEER
12/4/20

shaping the built environment
JQ Infrastructure
JQ INFRASTRUCTURE, LLC
84 NE LOOP 410, SUITE 245
210.858.9803
SAN ANTONIO, TEXAS 78216
PROJECT NO: 4200119
TBPE FIRM 7986

SHEET TITLE
Civil Details

SHEET NUMBER
C511

PVC SANITARY SEWER
BEDDING MATERIAL
BEDDING MATERIAL SHALL BE COMPOSED OF SAND MEETING THE REQUIREMENTS OF ASTM C33.

INITIAL BACKFILL
INITIAL BACKFILL SHALL CONSIST OF SAND WHICH TO CONFORMS TO THE REQUIREMENTS FOR BEDDING MATERIAL.

SECONDARY BACKFILL
SECONDARY BACKFILL SHALL CONSIST OF MATERIAL REMOVED FROM THE TRENCH AND SHALL BE FREE OF BRUSH, DEBRIS AND TRASH. NO ROCK OR STONES HAVING ANY DIMENSION LARGER THAN SIX INCHES (6") AT THE LARGEST DIMENSION SHALL BE USED IN THE SECONDARY BACKFILLING ZONE. SECONDARY BACKFILL SHALL BE PRIMARILY COMPOSED OF COMPACTIBLE SOIL MATERIALS.

PVC WATER
BEDDING MATERIAL
BEDDING MATERIAL SHALL BE COMPOSED OF SAND WHICH CONFORMS TO THE REQUIREMENTS OF ASTM C33.

INITIAL BACKFILL
INITIAL BACKFILL SHALL CONSIST OF SAND WHICH TO CONFORMS TO THE REQUIREMENTS FOR BEDDING MATERIAL.

SECONDARY BACKFILL
SECONDARY BACKFILL SHALL CONSIST OF MATERIAL REMOVED FROM THE TRENCH AND SHALL BE FREE OF BRUSH, DEBRIS AND TRASH. NO ROCK OR STONES HAVING ANY DIMENSION LARGER THAN SIX INCHES (6") AT THE LARGEST DIMENSION SHALL BE USED IN THE SECONDARY BACKFILLING ZONE. SECONDARY BACKFILL SHALL BE PRIMARILY COMPOSED OF COMPACTIBLE SOIL MATERIALS.

RCP STORM SEWER
BEDDING MATERIAL
BEDDING MATERIAL SHALL BE COMPOSED OF CRUSHED STONE OR CRUSHED GRAVEL.

INITIAL BACKFILL
INITIAL BACKFILL SHALL CONSIST OF SAND WHICH TO CONFORMS TO THE REQUIREMENTS FOR BEDDING MATERIAL.

SECONDARY BACKFILL
SECONDARY BACKFILL SHALL CONSIST OF MATERIAL REMOVED FROM THE TRENCH AND SHALL BE FREE OF BRUSH, DEBRIS AND TRASH. NO ROCK OR STONES HAVING ANY DIMENSION LARGER THAN SIX INCHES (6") AT THE LARGEST DIMENSION SHALL BE USED IN THE SECONDARY BACKFILLING ZONE. SECONDARY BACKFILL SHALL BE PRIMARILY COMPOSED OF COMPACTIBLE SOIL MATERIALS.

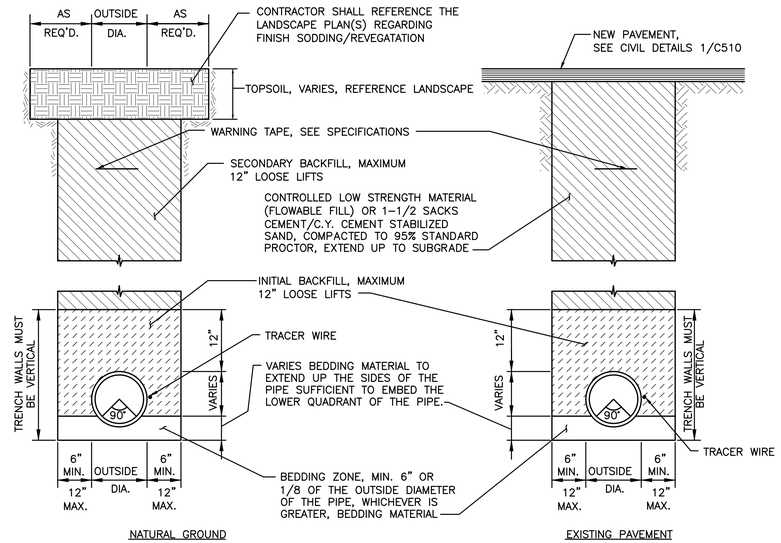

NOTE
TRACER WIRE SHALL BE INSTALLED IN TRENCH WITH NEW SEWER & WATER LINES, SEE DETAIL SHEETS C521 & C522 FOR DETAILS.

1 TYPICAL TRENCH BACKFILL DETAIL
N.T.S.

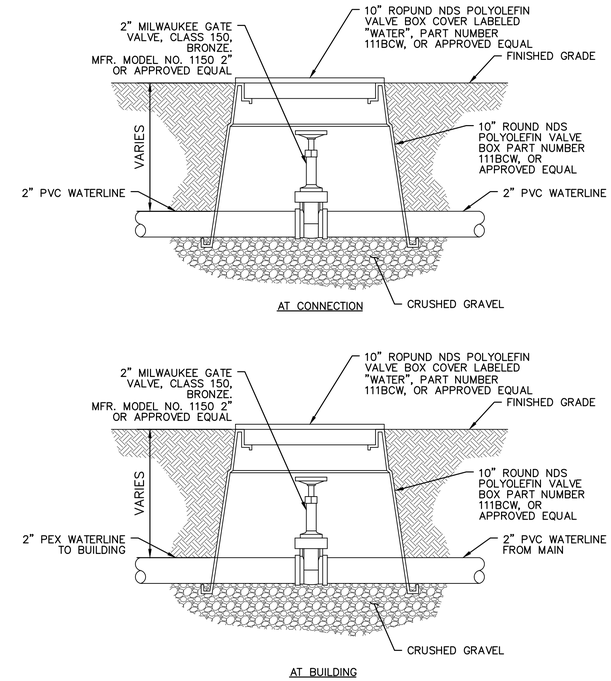

2 TYPICAL WATER VALVE SETTING AND BOX
N.T.S.

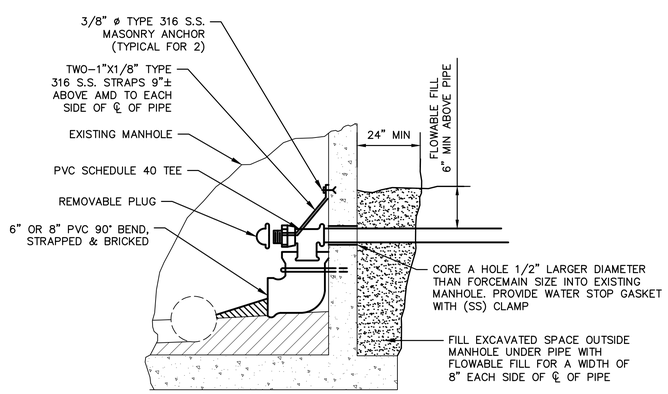

3 EXISTING MANHOLE CONNECTION
N.T.S.

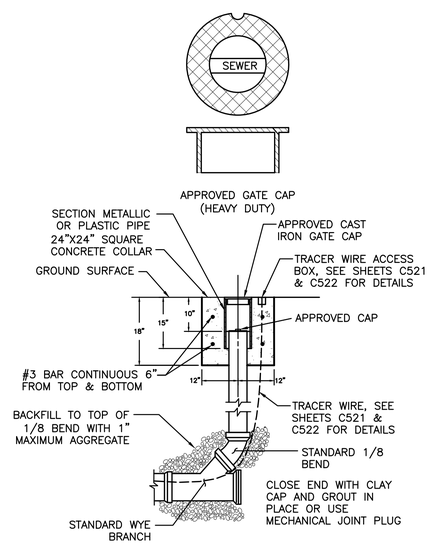

4 TYPICAL CLEANOUT DETAIL
N.T.S.

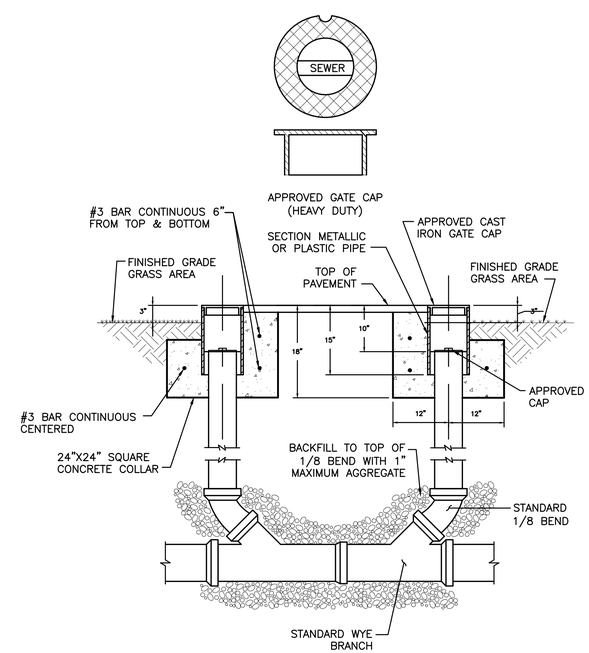

5 TYPICAL TWO-WAY CLEANOUT DETAIL
N.T.S.

TEXAS PARKS & WILDLIFE

RICHTER ARCHITECTS

LAKE CORPUS CHRISTI STATE PARK
RESTROOM REPLACEMENT
PROJECT NUMBER 1210196A

DATE: 12/04/2020
DESIGNED BY: BB
DRAWN BY: MM
REVIEWED BY: TZ
REVISED:
REVISED:
REVISED:

STATE OF TEXAS
ERLATH W. ZUEHL III
89535
LICENSED PROFESSIONAL ENGINEER
12/4/20

SHEET TITLE
Utility Details

SHEET NUMBER
C520

shaping the built environment
JQ Infrastructure
JQ INFRASTRUCTURE, LLC
84 NE LOOP 410, SUITE 245
210.858.9803
SAN ANTONIO, TEXAS 78216
PROJECT NO: 4200119
TBPE FIRM 7986

SECTION 01 57 23 - CONDUCTIVE TRACE WIRE FOR NONMETALLIC PIPE INSTALLATION

PART 1 - GENERAL
1.1 GENERAL DOCUMENTS
A. This specification provides the technical requirements necessary to ensure proper installation of tracer wire and related components for the purposes of locating both conductive and non-conductive underground water/sewer utilities. It recognizes that the first step in protecting underground utility assets is installing a quality, reliable locating system. This specification is based on best practices for underground utility locating.

If using Copperhead® products, part numbers are in **bold** print.
* denotes color (B=blue, G=green, P=purple)
** spool size (500', 1000', 2500')

Materials
General
- All system components, including tracer wire, connectors, ground rods, and access boxes, must be compatible.
- All tracer wire shall have HDPE insulation for direct bury, and color coded per APWA standard for the specific utility being marked.

Tracer Wire
- Open Trench - Tracer wire shall be copper-clad steel 12-AWG High Strength with minimum 450 lb. break load, minimum 30 mil HDPE insulation thickness **(1230*-HS-**)**.
- Directional Drilling/Boring - Tracer wire shall be copper-clad steel 12-AWG Extra High Strength with minimum 1,150 lb. break load, minimum 45 mil HDPE insulation thickness **(1245*-EHS-**)**.
- Pipe Bursting - Tracer wire shall be 7x7 stranded copper-clad steel with 4,700 lb. break load, minimum 50 mil HDPE insulation thickness **(PBX-50*-**)**.

Connectors
- All mainline tracer wires shall be interconnected at intersections, at mainline tees, and mainline crosses. At tees, the three wires shall be joined using a single, three-way locking connector **(LSC1230*)**. At crosses, the four wires shall be joined using two, three-way locking connectors **(LSC1230*)** with a short jumper wire between them.
- Direct bury wire connectors shall include three-way lockable locking connectors **(LSC1230*)** and Mainline-to-Service connectors (3WB- 01) specifically manufactured for use in underground tracer wire installation. Connectors shall be dielectric silicone filled to seal out moisture and corrosion and shall be installed in a manner as to prevent any uninsulated wire exposure.
- Non-locking, friction fit, twist on, or taped connectors are prohibited.

Grounding
- Tracer wire must be properly grounded at all dead-end mains, service laterals, and curb stops.
- Grounding of tracer wire shall be achieved by using a 1.5-lb, drive-in, magnesium ground rod **(ANO-12)** with a minimum 20-feet, #12 red HDPE insulated copper-clad steel wire connected to the rod, specifically manufactured for this purpose.
- When grounding the tracer wire in areas where the tracer wire is continuous and neither the mainline trace wire or the grounding anode wire will be terminated at/above grade, install grounding anode directly beneath and in-line with the tracer wire. Do not coil excess wire from grounding anode. In this installation method, the grounding anode wire shall be trimmed to an appropriate length before connecting to tracer wire with a mainline to service connector.

- Where the anode wire will be connected to a tracer wire access box, a minimum of 2 ft. of excess/slack wire is required after meeting final elevation.
- When installing tracer wire from curb stop to residence, if sewer and water are in the same trench, tracer wire only needs to be installed with water. Tracer wire needs to be connected to existing blue wire at base of curb stop using an approved three-way connector **(3WB- 01)**. Existing grounding anode may be used at base of curb stop. At base of exterior foundation, tracer wire needs to be properly grounded using approved grounding anode.

Termination/Access
- All tracer wire termination points must utilize an approved tracer wire access box (above ground access box or grade level/in-ground access box as applicable), **(LD14*2T or SP-SWLID-*2)** specifically manufactured for this purpose.
- All at-grade access boxes shall be appropriately identified with "sewer" or "water" cast into the cap and be color-coded.
- All two-terminal tracer wire access boxes must include a manually interruptible conductive/connective link between the terminal for the tracer wire connection and the terminal for the ground rod wire connection.
- Grounding anode wire shall be connected to the identified (or bottom) terminal on all access boxes.
- Service Laterals on public property - Tracer wire shall terminate at an approved at-grade, two-terminal access box **(LD14*2T or SP-SWLID-*2)** near the curb stop for water, or near the clean-out for sewer and storm applications. Water access box shall be installed under a top hat **(A1)** with curb stop when located in driveway. Sewer access box shall be located under a top hat **(A32)**. Clean-out shall also be located under a top hat **(A32)** when in driveway. See Grounding.
- Service Laterals on private property - Tracer wire must terminate at an approved at-grade two terminal access box, **(LD14*2T or SP-SWLID-*2)** near the curb stop for water, or near the clean-out for sewer and storm applications. When installing sewer and water from curb stop to residence, if sewer and water are in the same trench, tracer wire only needs to be installed with water. Tracer wire needs to be connected to existing blue wire at base of curb stop using an approved three-way connector **(3WB- 01)**. At base of exterior foundation, tracer wire needs to be properly grounded. *See Grounding*.
- Hydrants – Tracer wire must terminate at an approved above-ground tracer wire access box, properly affixed to the hydrant grade flange **(T2-B01)**. 5/8 for hydrants with 5/8" bolts, and 3/4 for hydrants with 3⁄4" bolts. Affixing with tape or plastic ties shall not be acceptable.
- Long-runs - In excess of 500 linear feet without service laterals or hydrants. Tracer wire access must be provided utilizing an approved grade level/in-ground tracer wire access box, located at the edge of the road right-of-way, and out of the roadway.

Installation
General
- Tracer wire installation shall be performed in such a manner that allows proper access for connection of line tracing equipment, proper locating of wire without loss or deterioration of low frequency (512 Hz) signal, and without distortion of signal caused by more than one wire being installed in close proximity to one another.
- Tracer wire systems must be installed as a single continuous wire, except where using approved connectors. No looping or coiling of wire is allowed.
- Any damage occurring during installation of the tracer wire must be immediately repaired by removing the damaged wire, and installing a new section of wire with approved connectors. Taping and/or spray coating shall not be allowed.
- Tracer wire shall be installed at the bottom half of the pipe and secured (taped/tied) at 5' intervals.

- Mainline tracer wire shall not be connected to existing conductive pipes. Treat as a mainline dead-end ground using an approved waterproof connector to a ground rod driven into virgin soil beneath, in line with the utility, and buried at the same depth as the tracer wire.
- Tracer wire must be properly grounded as specified.
- All service lateral tracer wire shall be a single wire, connected to the mainline tracer wire using a three-waymainline-to-service connector, installed without cutting/splicing the mainline tracer wire.
- In occurrences where an existing tracer wire is encountered on an existing utility that is being extended or tied into, the new tracer wire and existing tracer wire shall be connected using approved connectors.
- Two feet of excess/slack wire is required in all tracer wire access points after meeting final elevation.
- At all dead-end mains, service laterals, and curb stops, tracer wire shall go to ground using an approved connection to a drive-in magnesium ground rod.

Sanitary Sewer System
- A mainline tracer wire must be installed, with all service lateral tracer wires properly connected to the mainline tracer wire, to ensure full tracing/locating capabilities from a single connection point.
- Lay mainline tracer wire continuously, by-passing around the outside of manholes/structures on the north or east side.
- Tracer wire on all sanitary service laterals must terminate at an approved at-grade, two-terminal access box color coded green **(LD14G2T or SP-SWLID-G2)** and located directly above the service lateral near the clean-out, or curb stop. Access box shall be installed under a top hat **(A32)** when located in driveway.

Water System
- A mainline tracer wire must be installed, with all service lateral tracer wires properly connected to the mainline tracer wire, to ensure full tracing/locating capabilities from a single connection point.
- Lay mainline tracer wire continuously, by-passing around the outside of valves and fittings on the north or east side.
- Tracer wire on all water service laterals must terminate at an approved at-grade, two-terminal tracer wire access box, color coded blue, **(LD14B2T or SP-SWLID-B2)** and located directly above the service lateral near the curb stop. Access box shall be installed under a top hat **(A1)** with curb stop when located in driveway.
- Above-ground tracer wire access boxes will be installed on all fire hydrants **(T2-B01)**.
- All conductive and non-conductive service lines shall include tracer wire.

Storm Water System
- If the storm sewer system includes service laterals for connection of private drains and tile lines, tracer wire shall terminate at an approved at-grade, two-terminal access box **(LD14G2T or SP-SWLID-G2)** near the clean-out.
- Lay mainline tracer wire continuously, by-passing around the outside of manholes/structures on the north or east side.

Prohibited Products and Methods
The following products and methods shall NOT be allowed or acceptable:
- Uninsulated tracer wire
- Stainless steel tracer wire
- Tracer wire insulations other than HDPE
- Non-locking, friction fit, twist on, or taped connectors
- Brass or copper ground rods
- Wire connections utilizing taping or spray-on waterproofing

SPECIFICATIONS ON THIS SHEET APPLY TO THE INSTALLATION OF CONDUCTIVE TRACE WIRE FOR NONMETALLIC PIPE ONLY. ANY REFERENCES TO OTHER WORK, PRODUCTS OR MATERIALS SHOWN IN THESE SPECIFICATIONS ARE GENERIC ONLY AND USED TO HELP GRAPHICALLY IDENTIFY PROPER INSTALLATION OF THE CONDUCTIVE TRACE WIRE.

- Looped wire or continuous wire installations that have more than one wire laid side-by- side or in close proximity to one another
- Tracer wire wrapped around the corresponding utility
- Brass fittings with tracer wire connection lugs
- Wire terminations within the roadway in valve boxes, cleanouts, manholes, etc.
- Connecting tracer wire to existing conductive utilities

Testing
All new tracer wire installations shall be located using typical low frequency (512 Hz) line tracing equipment, witnessed by the contractor, engineer, and facility owner as applicable, prior to acceptance of ownership.

This verification shall be performed upon completion of rough grading and again prior to final acceptance of the project.

Continuity testing in lieu of actual line tracing shall not be accepted.

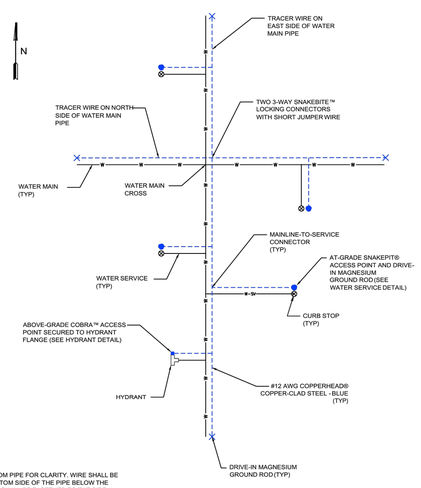

NOTES:
WIRE SHOWN AWAY FROM PIPE FOR CLARITY. WIRE SHALL BE INSTALLED ON THE BOTTOM SIDE OF THE PIPE BELOW THE SPRING LINE. THE WIRE SHALL BE FASTENED TO THE PIPE WITH TAPE OR PLASTIC TIES AT 5' INTERVALS.

SAMPLE PLAN (WATER)
NO SCALE

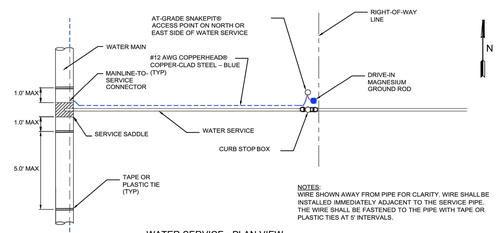

NOTES:
WIRE SHOWN AWAY FROM PIPE FOR CLARITY. WIRE SHALL BE INSTALLED IMMEDIATELY ADJACENT TO THE SERVICE PIPE. THE WIRE SHALL BE FASTENED TO THE PIPE WITH TAPE OR PLASTIC TIES AT 5' INTERVALS.

WATER SERVICE - PLAN VIEW
NO SCALE

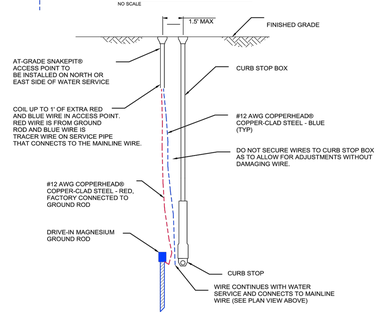

WATER SERVICE - SECTION VIEW
NO SCALE

TEXAS PARKS & WILDLIFE

RICHTER ARCHITECTS

LAKE CORPUS CHRISTI STATE PARK
RESTROOM REPLACEMENT
PROJECT NUMBER 1210196A

DATE: 12/04/2020
DESIGNED BY: BB
DRAWN BY: MM
REVIEWED BY: TZ
REVISED:
REVISED:
REVISED:

STATE OF TEXAS
ERLATH W. ZUEHL III
89535
LICENSED PROFESSIONAL ENGINEER
12/4/20

SHEET TITLE
Utility Details

SHEET NUMBER
C521

shaping the built environment
JQ Infrastructure
JQ INFRASTRUCTURE, LLC
84 NE LOOP 410, SUITE 245 SAN ANTONIO, TEXAS 78216
210.858.9803
PROJECT NO: 4200119 TBPE FIRM 7986

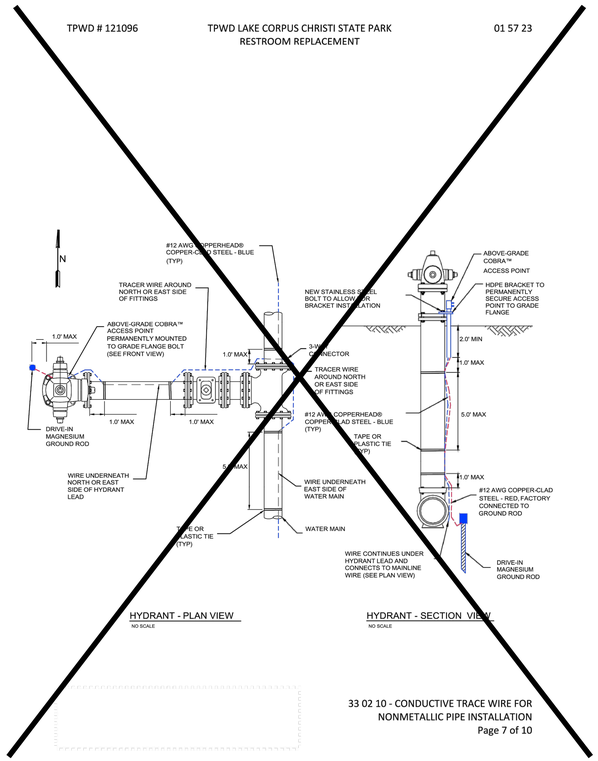

HYDRANT - PLAN VIEW
NO SCALE

HYDRANT - SECTION VIEW
NO SCALE

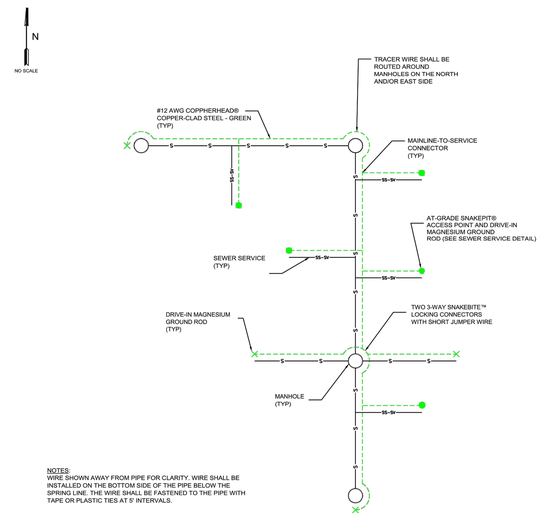

NOTES:
WIRE SHOWN AWAY FROM PIPE FOR CLARITY. WIRE SHALL BE INSTALLED ON THE BOTTOM SIDE OF THE PIPE BELOW THE SPRING LINE. THE WIRE SHALL BE FASTENED TO THE PIPE WITH TAPE OR PLASTIC TIES AT 5' INTERVALS.

SAMPLE PLAN (SEWER)
NO SCALE

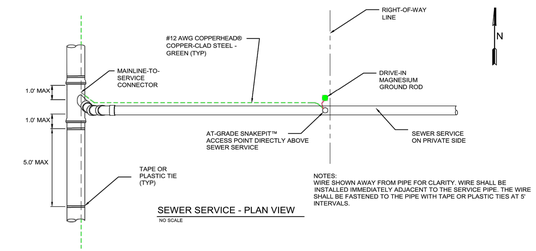

NOTES:
WIRE SHOWN AWAY FROM PIPE FOR CLARITY. WIRE SHALL BE INSTALLED IMMEDIATELY ADJACENT TO THE SERVICE PIPE. THE WIRE SHALL BE FASTENED TO THE PIPE WITH TAPE OR PLASTIC TIES AT 5' INTERVALS.

SEWER SERVICE - PLAN VIEW
NO SCALE

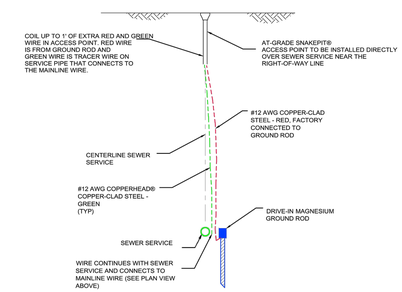

SEWER SERVICE - SECTION VIEW
NO SCALE

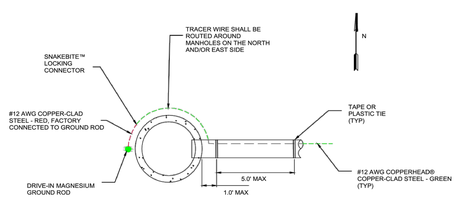

SEWER MANHOLE - PLAN VIEW
NO SCALE

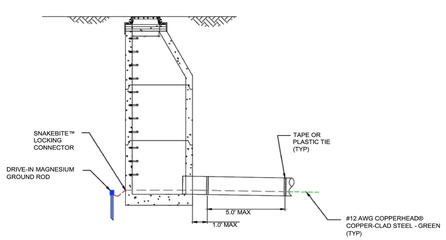

SEWER MANHOLE - SECTION VIEW
NO SCALE

END OF SECTION 33 02 10

SPECIFICATIONS ON THIS SHEET APPLY TO THE INSTALLATION OF CONDUCTIVE TRACE WIRE FOR NONMETALLIC PIPE ONLY. ANY REFERENCES TO OTHER WORK, PRODUCTS OR MATERIALS SHOWN IN THESE SPECIFICATIONS ARE GENERIC ONLY AND USED TO HELP GRAPHICALLY IDENTIFY PROPER INSTALLATION OF THE CONDUCTIVE TRACE WIRE.

TEXAS PARKS & WILDLIFE

RICHTER ARCHITECTS

LAKE CORPUS CHRISTI STATE PARK
RESTROOM REPLACEMENT
PROJECT NUMBER 1210196A

DATE: 12/04/2020
DESIGNED BY: BB
DRAWN BY: MM
REVIEWED BY: TZ
REVISED:
REVISED:
REVISED:

STATE OF TEXAS
ERLATH W. ZUEHL III
89635
LICENSED PROFESSIONAL ENGINEER
12/4/20

SHEET TITLE
Utility Details

SHEET NUMBER
C522

shaping the built environment
JQ Infrastructure
JQ INFRASTRUCTURE, LLC
84 NE LOOP 410, SUITE 245 SAN ANTONIO, TEXAS 78216
210.858.9803
PROJECT NO: 4200119 TBPE FIRM 7986

PROCESS ENGINEERED EQUIPMENT COMPANY
438 MCBRIDE • P.O. BOX 9549
CORPUS CHRISTI, TEXAS 78469-9549

TBPE F-003760 · TCEQ OC-20018

PHONE (361) 289-8891
FAX (361) 289-7733
EMAIL mail@peeco.com
www.peeco.com

Over 50 Years In Texas

SPECIFICATIONS
PACKAGED LIFT STATION - GRINDER PUMPS

1.0 SCOPE
The lift station shall be a factory built packaged type complete with the wet well structure, pumps, piping, valves, accessories, and electrical controls supplied from one manufacturer with unit responsibility. The structure and all internal components shall be field assembled and tested by the manufacturer's factory crews. Unless otherwise approved in writing a minimum of ten days prior to the bid date the lift station shall be as manufactured by Process Engineered Equipment Company (PEECO), Corpus Christi, Texas or ITT Water & Wastewater, Flygt Products.

2.0 WET WELL
The wet well structure shall be precast concrete (RCP) with diameter and depth dimensions as shown on the plans. The wet well bottom shall be concrete with provisions for the pump discharge connections in the bottom. The top of the basin shall be equipped with a 3 inch lip ring that will allow bolting of the aluminum lid in place. Threaded couplings shall be provided for connection of electrical conduits to each of the pumps and to the level control float switches.

3.0 PUMPS

3.1 GENERAL
The pumps shall be 3.1 HP minimum, heavy duty submersible grinder type suitable for continuous operation at a 47 GPM with 64 feet TDH utilizing 230 volt, 1 phase power supply. The pumps shall be capable of receiving raw domestic wastewater and grinding paper, cloth, plastic and synthetic objects common to domestic wastewater to a slurry with maximum 1/4 inch solids prior to pumping. Mechanical and electrical design shall be suitable for continuous operating periods in excess of two hours four times per day, seven days per week. Designs for common residential service will not be acceptable.

Support legs shall be provided to allow setting of pumps directly on the wet well floor. Accessory components and hardware required inside the wet well shall be cast iron, 304 stainless steel, aluminum alloy or nonmetallic material. Coated or galvanized fabricated steel inside the wet well will not be acceptable.

3.2 PUMP DESIGN
Major pump components shall be Class 30 cast iron with machined mating surfaces utilizing nitrile o-rings for water tight sealing. The shaft shall be nickel chrome stainless steel, A1S1 420 or equal, single piece, full diameter throughout with no machined shoulders. The impeller shall be multivane, semi-open, cast iron ASTM A48-76, Class 30B and connected to the shaft by a tapered collet and locking screw. Cutting components shall consist of a rotating cutter of minimum 550 Brinnel chrome alloy cast iron and a hardened 316L stainless steel stationary cutter.

Shaft sealing shall be accomplished by two independent mechanical seals operating in tandem. The upper seal shall isolate the seal oil chamber from the stator and shall be equipped with a stationary carbon ring and a rotating ceramic ring. The lower seal shall prevent pumped liquid from entering the seal oil chamber and shall be furnished with stationary and rotating rings of tungsten carbide. Because of the heavy duty, continuous operation anticipated lower seals of ceramic or carbon will not be acceptable.

3.3 MOTOR DESIGN
The pump motor shall be specifically designed for continuous duty, high torque grinder pump application and capable of operating for extended periods, one hour or more, at the pump design conditions without the need for submergence for cooling. The stator yoke and frame shall be cast iron with external cooling fins. Internal machining shall be high quality and the stator shall be heat shrink fitted to the yoke. Insulation shall be full Class F and shall provide for an operating rise of 80 degree Centigrade plus a minimum 1.15 service factor.

Protective sensors for indication of high stator temperature and moisture leakage shall be provided in the motor. A minimum of two thermal sensors shall be provided in the stator windings. The leakage detector shall be mounted inside the stator housing and shall detect water leakage or oil entry from the seal chamber. Sensors shall be wired through the pump power cable to an electronic control module provided by the pump manufacturers and mounted in the pump control panel. The control module shall provide separate indication and contact closure for high stator temperature and leakage.

The power cable entry assembly shall be designed to allow simple removal and replacement of the power cable. Sealing shall be accomplished by mechanical compression of an elastomeric grommet by a brass gland nut without need for specific torque requirements. Cable entry sealing by epoxy or silicone compounds will not be acceptable.

4.0 PIPING
Each pump shall discharge to the treatment plant through a 1-1/2 inch diameter line. Riser piping inside the wet well shall be Schedule 80 PVC. Check valves shall be the ball type, and of all PVC construction and provided with unions on each end to allow removal. Shut off valves shall be manually operated ball type with PVC or bronze body and the Teflon seats.

5.0 ACCESSORIES

5.1 ENTRANCE COVER
The wet well shall be provided with a round access cover fabricated of 1/4 inch 606 IT aluminum deck plate and reinforced with aluminum angle to accommodate design live overload of 150 pounds per square foot. The cover shall be furnished with a flush fitting, hinged access door and equipped with an automatic latch to hold the door open. The access door shall be equipped with a retractable lift handle and a padlocking post. An angle frame shall be provided around the access door for mounting a float cable rack and power cable supports. All hardware shall be 316 stainless steel. Aluminum to be mounted directly on, or embedded in concrete shall be protected with a bitumastic coating.

5.2 PUMP LIFTING CABLES
Each pump shall be equipped with a 3/16 inch, 7/19 strand, 304 stainless steel, plastic coated lifting cable and attachment hardware. Each cable shall extend a minimum of six feet above the station top deck.

5.3 PUMP LIFTING HOIST
A removable swing type hoist shall be provided. The hoist shall be supported by a socket mounted in the aluminum cover and shall be equipped with a manual, crank type winch. The hoist/winch assembly shall be suitable for 200 pounds lifting load.

5.4 CABLE HANGERS
A hanger bracket fabricated of 304 stainless steel shall be mounted inside the wet well cover for support of two pump power cables, three bulb type level sensors, and two pump lift cables.

5.5 HARDWARE
All bolts, nuts, washers, expansion type anchors and other miscellaneous hardware used inside the wet well shall be 304 stainless steel or approved equal for corrosion resistance.

6.0 ELECTRICAL

6.1 CONTROL PANEL
A duplex control panel shall be provided for automatic pump control utilizing a 230-volt, three phase,1 wire power supply with separate ground. The panel shall be factory wired and tested by the lift station manufacturer prior to shipment. Components and operating functions of the panel shall include the following:

a) NEMA 4X stainless steel enclosure.
b) Terminals for incoming power, neutral and ground and for external control devices.
c) Thermal/Magnetic circuit breakers for each pump
d) Magnetic starters rated for continuous duty at motor nameplate horsepower.
e) Hand-Off-Auto switch for each pump wired to bypass all automatic controls except overloads when operated in the "Hand" position. Switches shall be full size NEMA 4X nonmetallic.
f) Pump failure relay with manual reset to indicate the "lag" pump function has been called due to high water level. This relay shall activate an alarm light, 60 watt, with red plastic lens externally mounted for clear visibility. The alarm light shall function as a common alarm light to indicate high water level has occurred due to pump or control malfunction, power failure, high peak flows or other causes.
g) Run time meters for each pump calibrated in tenths of hours mounted on a separate panel inside the control enclosure.
h) Duplex alternating relay for automatic pump alternation after each pump cycle. The alternator shall be equipped and wired to allow a five second time delay prior to alternation after receiving the "Off/Alternate" level sensor.
i) Lightning arrestor, external mounted 230-volt, single phase.

6.2 LEVEL CONTROL
The lift station pumps shall be automatically controlled by mercury bulb type level sensors mounted in the wet well. Level sensors shall be the non-floating type with no external weights or

attachment required for proper operation and shall allow adjustment of operating levels from the station top deck. Contact ratings shall be rated 8 amps minimum at 240 volt.

6.3 MOUNTING RACK, CONTROL PANEL
A panel mounting rack shall be provided by the Electrical Contractor as indicated on the plans.

7.0 INSTALLATION

7.1 LIFT STATION MANUFACTURER
The lift station shall be assembled at the job site by the manufacturer's factory crews including the following:

a) Assemble, seal, and finish coat precast concrete wet well.
b) Install pumps, piping, accessories, control panel, and level controls.
c) Connect wiring from pumps and level controls to the control panel.

7.2 CONTRACTOR (PURCHASER)
The Contractor (Purchaser) shall provide the following in accordance with the Plans and/or drawings to be provided by the lift station manufacturer:

a) Excavation, backfill, dewatering and site preparation
b) Sand or pea gravel cushion for leveling
c) Crane for unloading and setting
d) Access to site for trucks and crane
e) Water to fill and test.
f) Electrical power supply and ground to incoming terminals in the control panel including wire, conduit, meter loop, disconnect poles, and other items as indicated on the Plans.

8.0 START-UP
The lift station manufacturer shall field test and adjust all components and accessories, put the station in operation and notify the Engineer or Owner that the station is ready for operation.

9.0 OPERATOR TRAINING
The lift station manufacturer shall instruct the Owner's operator or representative in the function, design operation and troubleshooting of mechanical and electrical equipment and provide two operation and maintenance manuals. The Owner shall make the operator or representative available periodically during installation and for four hours during start-up.

10.0 WARRANTY
The lift station manufacturer shall warrant all equipment materials and labor furnished to be free of defects or failure due to normal operation for a period of eighteen months from the date of installation or twelve months from the date of initial operation, whichever occurs first. Defects or failures occurring during the warranty period will be repaired or replaced by the manufacturer at no cost to the owner.

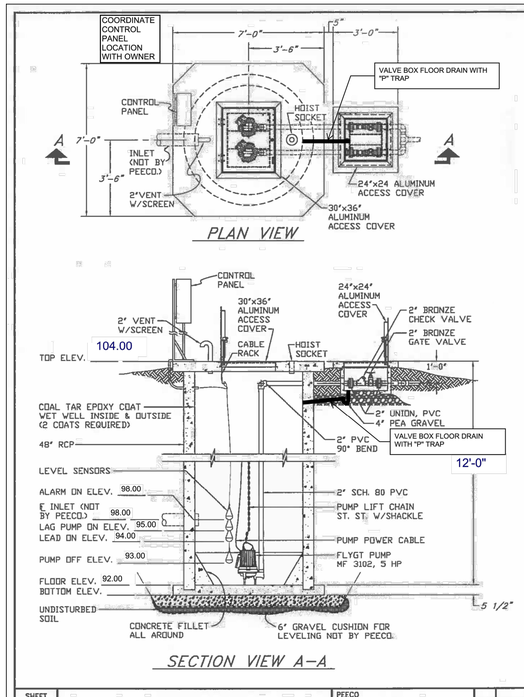

LIFT STATION EQUIPMENT DATA SHEET

PROJECT: LAKE CORPUS CHRISTI PEECO REFERENCE NO: 21-9014

STRUCTURE:
TYPE RCP 48" OVERALL DEPTH 13'-5 1/2"
SHIPPING PIECES 3 MAXIMUM PIECE WEIGHT 15,000 LBS.
PEECO DRAWING NO.

PUMPS:
MANUFACTURER FLYGT CORP. MODEL NO. MF 3102
3.1 HP 3,500 R.P.M. 230 VOLT 1 PHASE 15.0 AMP, F.L.
RATING
PERFORMANCE CURVE 258 IMPELLER
SERIAL NUMBER(S) N/A

ACCESSORIES:	MANUFACTURER/MODEL/SIZE
X CHECK VALVE	2" BRONZE
X GATE VALVE	2" BRONZE
X LEVEL SENSORS 4 REQUIRED	S.J. ELECTRO SYSTEM 30 SVI N.O.
X ACCESS COVER, WETWELL	HALLIDAY, ALUMINUM/ST. ST. 304
X ACCESS COVER, VALVE VAULT	HALLIDAY, ALUMINUM/ST. ST. 304
X PIPING, PUMP TO FLOOR	PVC 2" SCH. 80
X PIPING, HEADER	PVC 2" SCH. 80
X CABLE RACK	304 STAINLESS STEEL
X LIFT CHAIN	3/16"-304 ST. ST. W/SHACKLE

ELECTRICAL-LIFT STATION CONTROLLER
MANUFACTURER PEECO MODEL
INCOMING POWER 230 VOLT 1 PHASE 4 WIRE
PEECO DRAWING NO.

NOTES:

1. EXCAVATION & BACKFILL NOT BY PEECO.
2. INCOMING POWER TO CONTROL PANEL NOT BY PEECO.
3. BALLAST, IF REQUIRED, NOT BY PEECO.
4. INFLUENT LINE NOT BY PEECO.
5. METERLOOP AND MAIN DISCONNECT NOT BY PEECO.
6. PURCHASER TO CONFIRM ALL ELEVATIONS AND PIPE LOCATIONS.

STATION OPERATION LEVELS		
RISING LEVEL CYCLE		
WATER LEVEL ELEVATION	ACTION	PUMPS IN OPERATION
92.00	BASIN FLOOR ELEVATION	
94.00	LEAD PUMP TURNS "ON", FS-2	LEAD PUMP "ON"
95.00	LAG PUMP TURNS "ON", FS-3	LEAD & LAG PUMPS "ON"
98.00	HIGH WATER "ALARM" LEVEL, FS-4	HIGH LEVEL ALARM "ON"
FALLING LEVEL CYCLE		
98.00	INLET PIPE INVERT ELEVATION	
98.00	HIGH WATER ALARM, FS-4	HIGH LEVEL ALARM "OFF"
93.00	PUMPS "OFF" LEVEL, FS-1	ALL PUMPS "OFF" LAG PUMP SWITCHES TO LEAD PUMP

SHEET

TX. PARKS & WILDLIFE
LAKE CORPUS CHRISTI
W/VALVE VAULT

PEECO DWG NO: 21-9014-01
SCALE: N.T.S.
DATE: 09/11/20
DWN BY: L.C.G.
APPROVED:

NO	DATE	REVISION

PROCESS ENGINEERED EQUIPMENT CO.
438 MCBRIDE LANE
P.O. BOX 9549
361-289-8891
Corpus Christi, Texas 78469

TEXAS PARKS & WILDLIFE

RICHTER ARCHITECTS

LAKE CORPUS CHRISTI STATE PARK
RESTROOM REPLACEMENT
PROJECT NUMBER 1210196A

DATE: 12/04/2020
DESIGNED BY: BB
DRAWN BY: MM
REVIEWED BY: TZ
REVISED:
REVISED:
REVISED:

STATE OF TEXAS
ERLATH W. ZUEHL III
89535
LICENSED PROFESSIONAL ENGINEER
12/4/20

SHEET TITLE
Lift Station Details

SHEET NUMBER
C530

shaping the built environment
JQ Infrastructure
JQ INFRASTRUCTURE, LLC
84 NE LOOP 410, SUITE 245
210.858.9803
SAN ANTONIO, TEXAS 78216
PROJECT NO: 4200119
TBPE FIRM 7986

NOTES:

1. INSTALL A NEMA 4X NON-METALLIC JUNCTION BOX WITH AN ALUMINUM BACKING PLATE BELOW THE CONTROL PANEL ON THE SAME COMMON RACK SYSTEM. SIZE BOX PER N.E.C. FOR THE CONDUIT SIZES AND NUMBER OF CONDUCTORS & TERMINATIONS IN THE BOX. ALL POWER, CONTROL, AND GROUNDING TERMINAL BLOCKS SHALL HAVE A SUFFICIENT NUMBER AND SIZE OF TERMINATION POINTS FOR SINGLE POINT CONNECTION OF ALL CONDUCTORS.

   A. INSTALL TERMINAL BLOCKS ON THE BACK PANEL OF THE J-BOX.

   B. THE TERMINAL BLOCKS SHALL BE PRESSURE PLATE DIN RAIL TYPE TERMINAL BLOCKS AND THESE SHALL BE USED FOR THE TERMINATION OF ANY SINGLE-CONDUCTOR CONTROL PANEL WIRING THAT ROUTES TO THE WET WELL AND FOR THE WIRES IN THE CABLES FROM THE FLOAT SWITCHES AND PUMPS IN THE WET WELL.

   C. ALL POWER, CONTROL, AND GROUNDING TERMINAL BLOCKS SHALL HAVE A SUFFICIENT NUMBER AND SIZE OF TERMINATION POINTS FOR SINGLE POINT CONNECTION OF ALL CONDUCTORS. PROVIDE THE TERMINAL BLOCK MANUFACTURER'S JUMPER TABS FOR ANY TERMINATIONS THAT REQUIRE MULTIPLE WIRE CONNECTIONS SUCH AS GROUND WIRES.

   D. PROVIDE A SEPARATE GROUND BUSS FOR THE TERMINATION OF ALL EQUIPMENT GROUNDING CONDUCTORS.

   E. PERMANENTLY IDENTIFY THE TERMINAL BLOCKS AND THE CONDUCTORS WITH WIRE MARKERS EQUAL TO BRADY. THE IDENTIFICATION NUMBERING SHALL MATCH THE WIRE NUMBERS SHOWN ON THE CONTROL PANEL FABRICATOR'S SCHEMATIC DIAGRAM FOR THE CONTROL PANEL.

2. FOR THESE TWO CONDUITS: INSTALL SCHEDULE 80 PVC CONDUIT BETWEEN THE CONTROL PANEL AND WET WELL AT THE DEPTHS SPECIFIED IN THE TRENCHING DETAILS FOR ELECTRICAL CONDUIT.

3. PROVIDE RMC NIPPLES WITH A CONDUIT SEAL FITTING (TO BE FILLED WITH CHICO SEALING COMPOUND) BETWEEN THE J-BOX AND CONTROL PANEL. SINGLE CONDUCTORS SHALL BE INSTALLED FROM THE CONTROL PANEL TO THE JUNCTION BOX TERMINAL STRIPS AND GROUND BUSS. COAT THE EXPOSED PORTIONS OF THE CONDUIT NIPPLES WITH COLD GALVANIZING COMPOUND.

4. IN THE J-BOX AND IN THE WET WELL: SEAL THE CONDUITS FROM THE J-BOX TO THE WET WELL WITH DUCT SEAL OR HARD SETTING CLOSED CELL FOAM TO PREVENT THE TRANSMISSION OF CORROSIVE GASES FROM THE WET WELL.

5. ALL HARDWARE FOR CONDUIT SUPPORT, ENCLOSURE MOUNTING, RACK ASSEMBLY & FABRICATION OR FOR OTHER NEEDS SHALL BE STAINLESS STEEL. ALL CONDUIT & CONDUIT FITTINGS SHALL BE PVC UNLESS NOTED OTHERWISE. NO METAL CONDUIT, METAL ENCLOSURES, METAL RACK MATERIALS OR OTHER METAL ITEMS SHALL BE INSTALLED FOR THE LIFT STATION CONTROL PANEL INSTALLATION OTHER THAN THE STAINLESS STEEL HARDWARE.

6. INSTALL A NEMA 4X, NON-METALLIC JUNCTION BOX WITH AN ALUMINUM INTERIOR BACK PANEL FOR THE PROPER TERMINATION OF THE POWER WIRING AND LIGHTNING/SURGE PROTECTION WIRING FOR THE LIFT STATION. THE JUNCTION BOX SHALL BE SIZED PER N.E.C. TO PROPERLY ACCEPT THE NUMBER AND SIZES OF WIRING INSTALLED IN THE BOX. ALL TERMINAL BLOCKS INSTALLED IN THIS JUNCTION BOX SHALL HAVE A SUFFICIENT NUMBER AND SIZE OF TERMINATION POINTS FOR SINGLE POINT CONNECTION OF ALL CONDUCTORS. PERMANENTLY IDENTIFY EACH GROUP OF POWER TERMINAL BLOCKS TO SHOW THE USE OF THE BLOCKS. PERMANENTLY IDENTIFY THE CONDUCTORS WITH WIRE MARKERS EQUAL TO BRADY. INSTALL THE FOLLOWING ON THE INTERIOR BACK PANEL:

   A. PRESSURE PLATE DIN RAIL TERMINAL BLOCKS OR POWER TERMINAL BLOCKS FOR THE TERMINATION OF THE POWER WIRING, SURGE PROTECTOR WIRING, AND LIGHTING ARRESTOR WIRING.
   B. EQUIPMENT GROUND BAR.
   C. ISOLATED GROUND BAR FOR GROUNDING ELECTRODE CONDUCTOR, SURGE PROTECTOR, AND LIGHTNING ARRESTOR GROUND. NOTE: THIS ENTIRE SYSTEM MUST BE ISOLATED.
   D. MOUNT THE SURGE PROTECTOR AND THE LIGHTING ARRESTOR TO THE BOTTOM OF THE JUNCTION BOX.
   E. INSTALL 1/2" PVC FOR THE #6 AWG, INSULATED GROUNDING ELECTRODE CONDUCTOR (GEC). ATTACHMENT THE GEC TO THE GROUND ROD USING AN EXOTHERMIC WELD.
   F. SUPPLY A COMMERCIAL GRADE LIGHTNING PROTECTOR WITH NEUTRAL AND GROUND WIRES AND SUPPLY A SURGE CAPACITOR WITH NEUTRAL AND GROUND WIRES AS DETERMINED BY THE VOLTAGE RATING OF THE ELECTRICAL SERVICE TO THE LIFT STATION EQUIPMENT. IF THE POWER SUPPLY IS 120/240 VAC, SINGLE PHASE: INSTALL DELTA LIGHTNING ARRESTORS MODEL #LA 302G LIGHTNING PROTECTOR WITH NEUTRAL AND GROUND AND MODEL #CA 302RG SURGE CAPACITOR. IF THE POWER SUPPLY IS 3-PHASE INSTALL THE CORRESPONDING 3-PHASE, DELTA LIGHTNING ARRESTOR BRAND OR EQUAL LIGHTNING ARRESTOR AND SURGE CAPACITOR.

7. THE NEW DOUBLE-THROW, NON-FUSED DISCONNECT SWITCH SHALL MATCH THE RATING OF THE PUMPING SYSTEM AND SHALL BE SUPPLIED WITH A SOLID NEUTRAL BAR AND A SEPARATE GROUND BUSS. SUPPLY THIS SWITCH IN A NEMA 4X, STAINLESS STEEL ENCLOSURE. CONNECT THE NORMAL POWER FEED TO THE TOP OF THE SWITCH, THE GENERATOR RECEPTACLE FEED TO THE BOTTOM OF THE SWITCH, AND THE LOAD WIRING TO THE CENTER CONNECTIONS IN THE SWITCH.

8. THE NEW GENERATOR RECEPTACLE SHALL MATCH THE RATING OF THE PUMPING SYSTEM. THE RECEPTACLE SHALL BE A PIN AND SLEEVE STYLE RECEPTACLE OR TWIST-LOCK STYLE RECEPTACLE WITH A SEPARATE GROUND CONNECTION. PIN AND SLEEVE RECEPTACLES SHALL HAVE STYLE 2 CONNECTIONS PROVIDING FOR A SEPARATE GROUND WIRE PIN CONNECTION IN THE RECEPTACLE AND IN THE MATING PLUG. THE GENERATOR RECEPTACLE SHALL BE SUPPLIED IN A WEATHERPROOF, NON-METALLIC BOX WITH A WEATHERPROOF, NON-METALLIC COVER.

9. THE NEW GENERATOR RECEPTACLE SHALL MATCH THE MATING PLUG THAT IS INSTALLED ON TPWD'S EXISTING TRAILER MOUNTED GENERATOR. THE CONTRACTOR SHALL COORDINATE THAT THE LIFT STATION GENERATOR RECEPTACLE MATES WITH TPWD'S GENERATOR MATING PLUG.

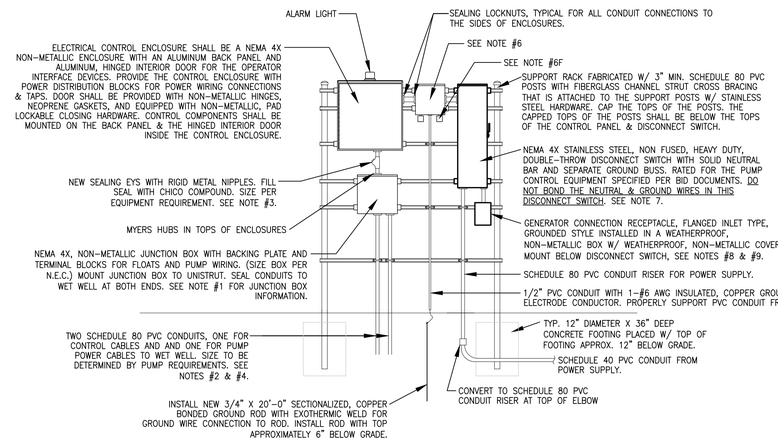

2 LIFT STATION CONTROL PANEL INSTALLATION DETAIL - COASTAL LOCATIONS

NOT TO SCALE

NOTE: INSTALL THE LIFT STATION CONTROL PANEL RACK SO THE FRONT OF THE ENCLOSURES FACE AWAY FROM THE OCEAN OR AWAY FROM THE DIRECT SEA BREEZE WIND.

TEXAS PARKS & WILDLIFE

RICHTER ARCHITECTS

LAKE CORPUS CHRISTI STATE PARK
RESTROOM REPLACEMENT
PROJECT NUMBER 1210196A

DATE: 12/04/2020
DESIGNED BY: BB
DRAWN BY: MM
REVIEWED BY: TZ
REVISED:
REVISED:
REVISED:

STATE OF TEXAS
ERLATH W. ZUEHL III
89535
LICENSED PROFESSIONAL ENGINEER
12/4/20

SHEET TITLE
Lift Station Details

SHEET NUMBER
C531

shaping the built environment
JQ Infrastructure
JQ INFRASTRUCTURE, LLC
8414E LOOP 410, SUITE 245
210.858.9803
SAN ANTONIO, TEXAS 78216
PROJECT NO: 4200119
TBPE FIRM 7986

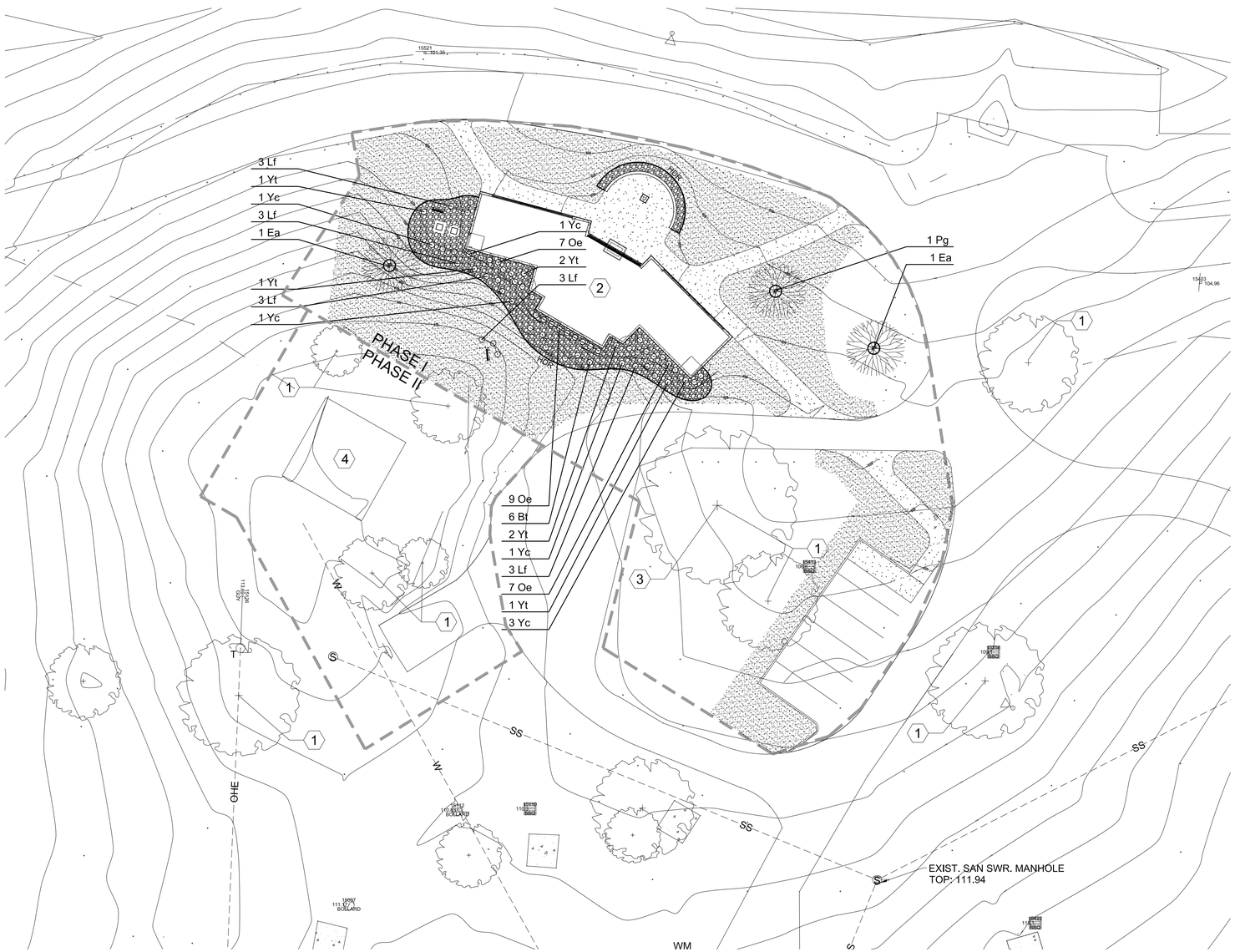

PLANT LEGEND

SYM./ABBREV.	BOTANICAL NAME	COMMON NAME	SIZE	APPROX. QTY.
Trees				
Ea	Ehretia anacua	Anacua	45 Gal.	2
Pg	Prosopis gladulosa	Honey Mesquite	45 Gal./Multi.	1
Shrubs				
Bt	Berberis trifoliolata	Agarito	3 Gal.	6
Lf	Leucophyllum frutescens	Texas Sage	5 Gal.	15
Oe	Opuntia engelmannii	Prickly Pear	Cuttings	23
Yc	Yucca constricta	Narrowleaf Yucca	3 Gal.	7
Yt	Yucca treculeana	Trecul Yucca	5 Gal.	7
Groundcovers				
	Solid Bermuda Sod			10,500 S.F.
	Rock:			1,500 S.F.
HDR	Edging: See 7/L300			220 L.F.
	Swale: See Civil Drawings			
	Limit of Work Line			

GENERAL NOTES

1. Quantities in Legend are approximate. Contractor shall derive their own quantities from plan and field measurements.
2. All planting areas to receive pre-emergent herbicide, See Specifications.
3. Prepare, amend, and fertilize existing soil per Specifications.
4. Pre-mix amendments into soil before backfilling plant pits - do not mix inside pits. Break large clods into small pieces. See Specifications.
5. Weed mat to be placed under rock and mulch. See Detail 5/L300, and see Specifications.
6. Install edging per Specifications and Detail 7/L300 .
7. Contractor shall select plant material from a pre-approved nursery, inspected for invasive ants.
8. Landscape Architect to approve edging board layout BEFORE plant layout commences.
9. Landscape Architect to approve plant material BEFORE plant layout commences.
10. Landscape Architect to approve layout of all plants BEFORE planting commences.
11. Plant cacti per detail 1/L300, and 4/L300 for nursery grown material.
12. Plant and stake or guy trees per detail 2/L300 or 3/L300 .
13. Install mulch to all tree rings. Top of mulch shall be 1/2" below edging. See Specifications for thickness.
14. Except where solid bermuda sod is indicated, seed all disturbed areas with common bermuda at 3 lbs./1000 s.f. for Phase I and Phase II. Water until established.
15. Broadcast wildflower seed mix over entire sod area. Seed mix shall include 10 lbs. of Texas Bluebonnet, 3 lbs. of Indian Blanket, and 1 lb. of Purple Coneflower.
16. Contractor shall maintain optimum moisture content to all sod, seed, and planted areas. See Specifications for Maintenance Period Requirements.

REFERENCE NOTE

1. Existing Trees: Preserve & Protect. See Civil Sheet C110 for Tree Protection Locations. See Landscape Detail Sheet L300 for Tree Protection Detail, and See Specifications.
2. New Restroom Building: See Architectural Drawings
3. Prune 40" Mesquite Tree: Pruning Work Shall be Performed by an ISA Certified Arborist. Review with Owner Prior to Commencing. In Addition to the Tree Protection Fencing, Wrap Trunk per Tree Protection Detail.
4. Existing Restroom Location: See General Note #14.

20 0 20 40

adla inc.
LANDSCAPE ARCHITECTURE
4833 Saratoga Blvd. #116
Corpus Christi, TX 78413
PH 361.288.2335
FX 361.288.7312
EM adlandarch@gmail.com
www.adlainc.com

REGISTERED LANDSCAPE ARCHITECT
ALEX M. DOMINGUEZ
2668
STATE OF TEXAS
12/04/20

TEXAS PARKS & WILDLIFE

RICHTER ARCHITECTS

LAKE CORPUS CHRISTI STATE PARK
RESTROOM REPLACEMENT
PROJECT NUMBER 1210196A

DATE: 12-04-2020
DESIGNED BY: AMD
DRAWN BY: AMD
REVIEWED BY: AMD
REVISED:
REVISED:
REVISED:

SHEET TITLE
Planting Plan

SHEET NUMBER
L200

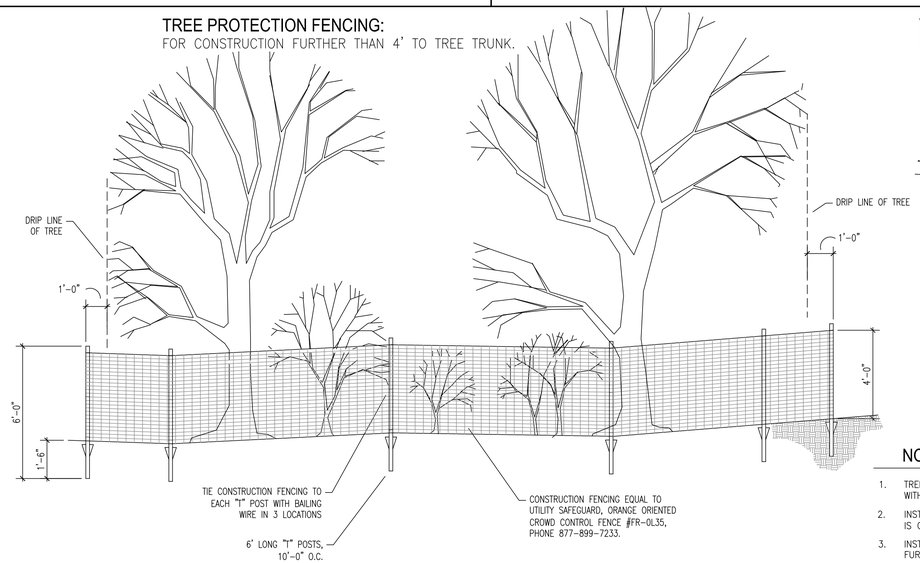

8 Tree Protection
NTS

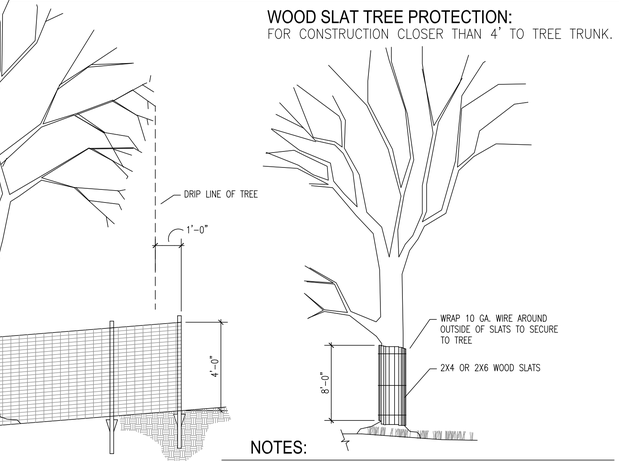

NOTES:

1. TREE PROTECTION IS REQUIRED FOR ALL EXISTING TREES WITHIN 20' OF THE LIMITS OF CONSTRUCTION.
2. INSTALL WOOD SLAT TREE PROTECTION WHEN CONSTRUCTION IS CLOSER THAN 4' TO TREE TRUNK.
3. INSTALL TREE PROTECTION FENCING WHEN CONSTRUCTION IS FURTHER THAN 4' TO TREE TRUNK.

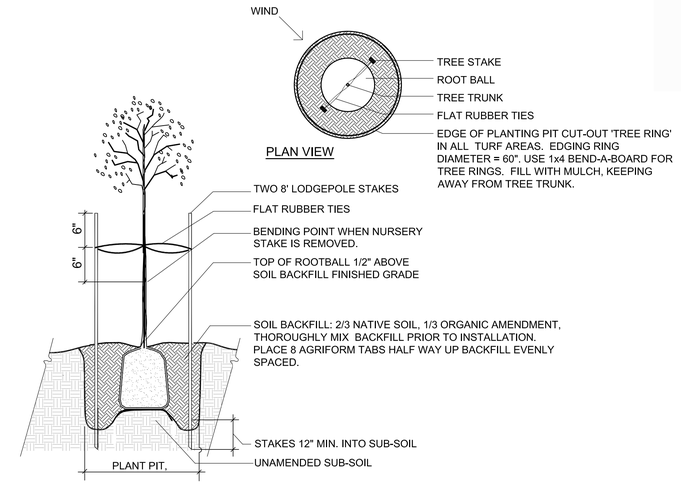

3 Tree Planting and Staking
NTS

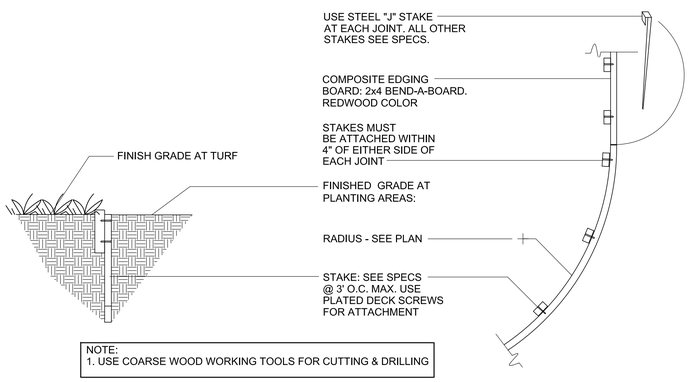

NOTE:
1. USE COARSE WOOD WORKING TOOLS FOR CUTTING & DRILLING

7 Edging
NTS

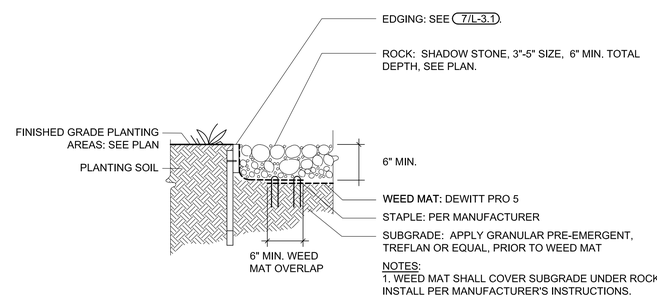

NOTES:
1. WEED MAT SHALL COVER SUBGRADE UNDER ROCK. INSTALL PER MANUFACTURER'S INSTRUCTIONS.

5 Rock
NTS

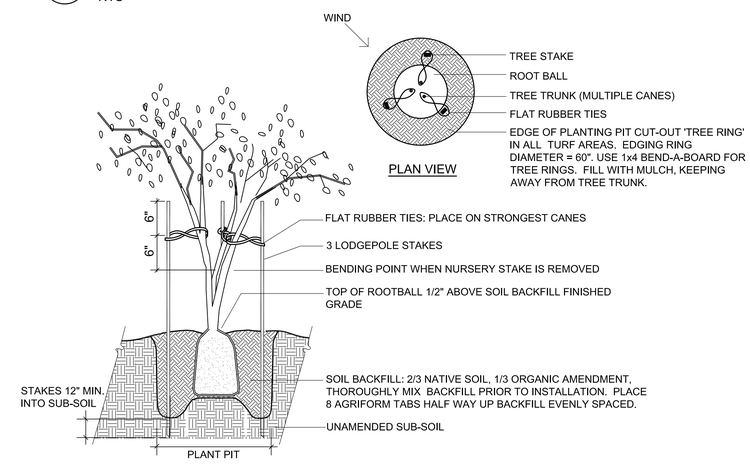

2 Tree Planting & Staking - Multi-trunk
NTS

ADLA INC.
LANDSCAPE ARCHITECTURE
4833 Saratoga Blvd. #116
Corpus Christi, TX 78413
PH 361.288.2335
FX 361.288.7312
EM adlandarch@gmail.com
www.adlainc.com

REGISTERED LANDSCAPE ARCHITECT
ALEXIS M. DOMINGUEZ
2668
STATE OF TEXAS
12/04/20

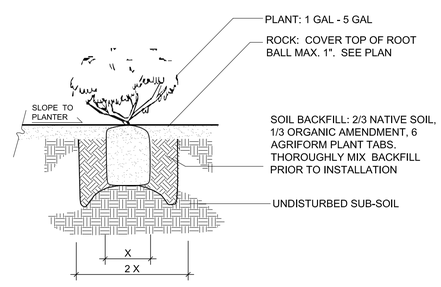

4 Shrub Planting in Rock
NTS

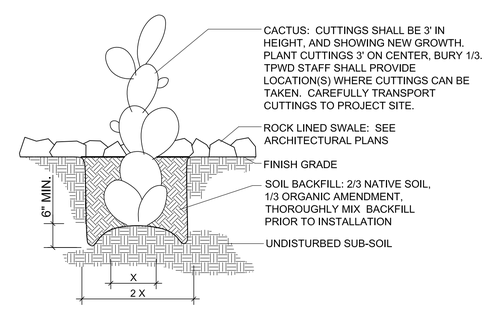

1 Cactus Cuttings Planting
NTS

6 Intentionally Left Blank
NTS

TEXAS PARKS & WILDLIFE

RICHTER ARCHITECTS

LAKE CORPUS CHRISTI STATE PARK
RESTROOM REPLACEMENT
PROJECT NUMBER 1210196A

DATE: 12-04-2020
DESIGNED BY: AMD
DRAWN BY: AMD
REVIEWED BY: AMD
REVISED:
REVISED:
REVISED:

SHEET TITLE
Details

SHEET NUMBER
L300

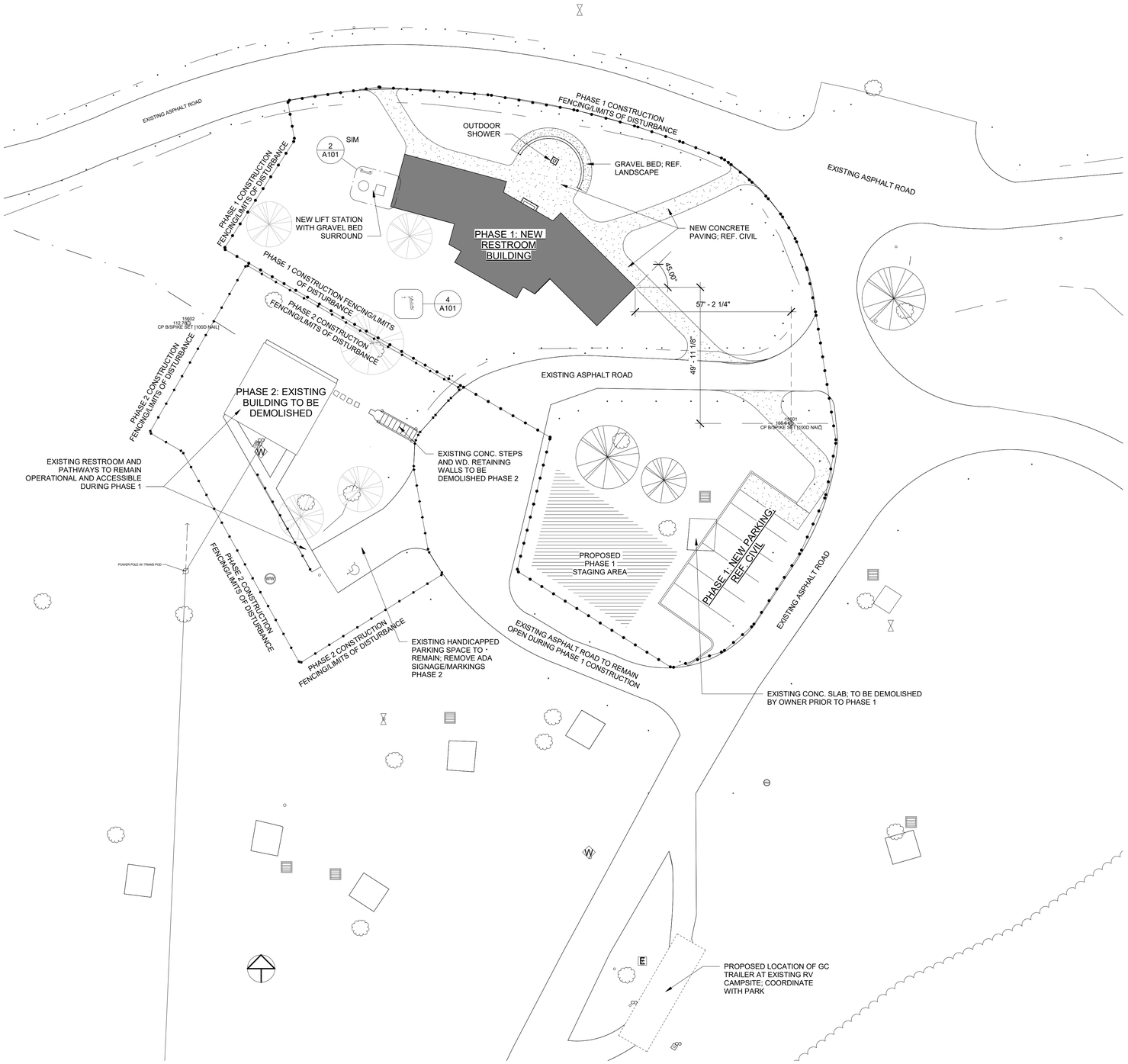

1 SITE PLAN
1" = 20'-0"

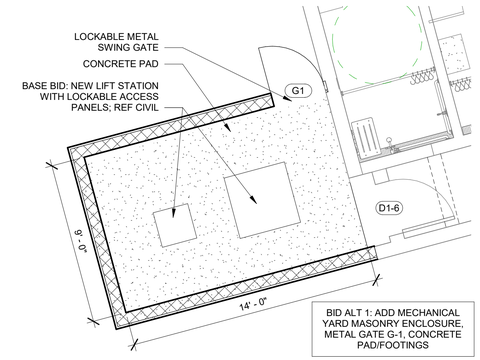

2 BID ALTERNATE NO. 1
1/4" = 1'-0"

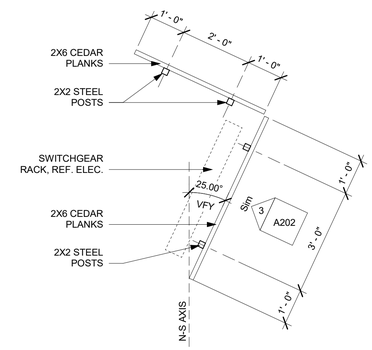

4 ELEC RACK SCREEN PLAN
1/2" = 1'-0"

TEXAS PARKS & WILDLIFE

RICHTER ARCHITECTS

LAKE CORPUS CHRISTI STATE PARK
RESTROOM REPLACEMENT
PROJECT NUMBER 1210196A

DATE: 12-22-2020
DESIGNED BY: DR/ECR
DRAWN BY: MRH
REVIEWED BY:
REVISED:

REVISED:

REVISED:

PHASE: 100% CONSTRUCTION DOCUMENTS

SHEET TITLE
SITE PLAN

SHEET NUMBER
A101

REGISTERED ARCHITECT
MARK LING RICHTER
20468
STATE OF TEXAS
12-04-20

C:\Users\mrich\OneDrive\Documents\22003.00 - TPWD Lake CC Restroom\22003.00 - TPWD Lake CC Restroom Replacement 12-04_LT.rvt

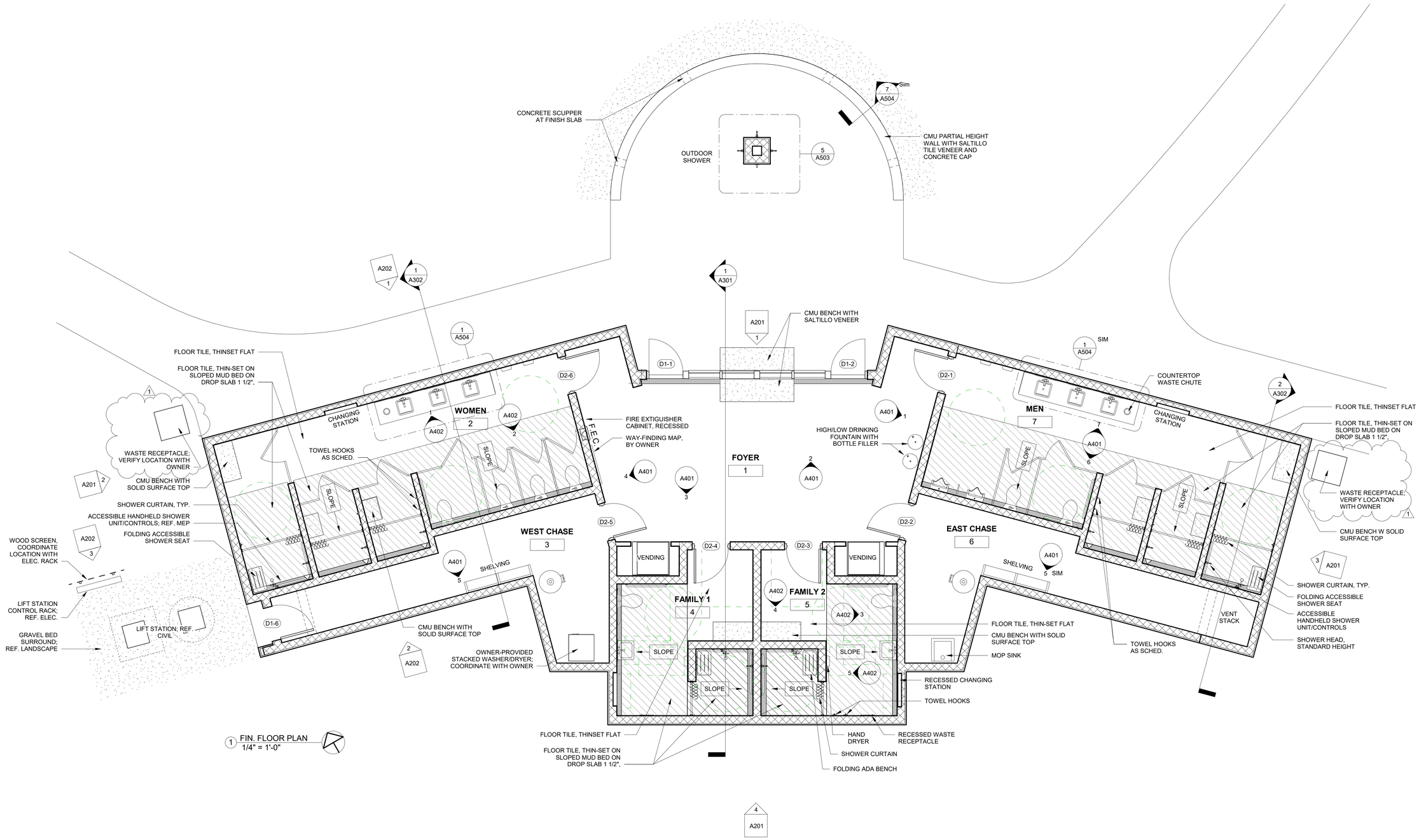

1 FIN. FLOOR PLAN
1/4" = 1'-0"

TEXAS PARKS & WILDLIFE

RICHTER ARCHITECTS

LAKE CORPUS CHRISTI STATE PARK
RESTROOM REPLACEMENT
PROJECT NUMBER 1210196A

ISSUE	
DATE:	12.22.2020
1	ADDENDUM 4 03.11.2021
REVISED:	
REVISED:	
PHASE: BIDDING	

SHEET TITLE
FLOOR PLAN

SHEET NUMBER
A102

REGISTERED ARCHITECT MAYA LING RICHTER 20168 STATE OF TEXAS
12-04-20

C:\Users\mrich\OneDrive\Documents\22003.00 - TPWD Lake CC Restroom Replacement 201204_100%CD_mrichterHVIUU.rvt

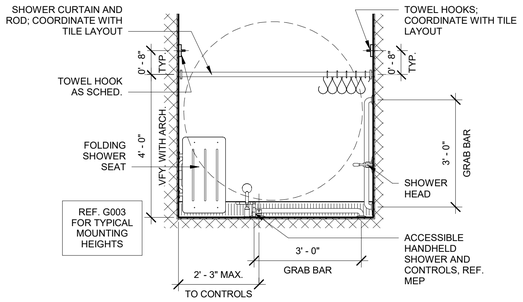

2 ACCESSIBLE SHOWER COMPARTMENT
1/2" = 1'-0"

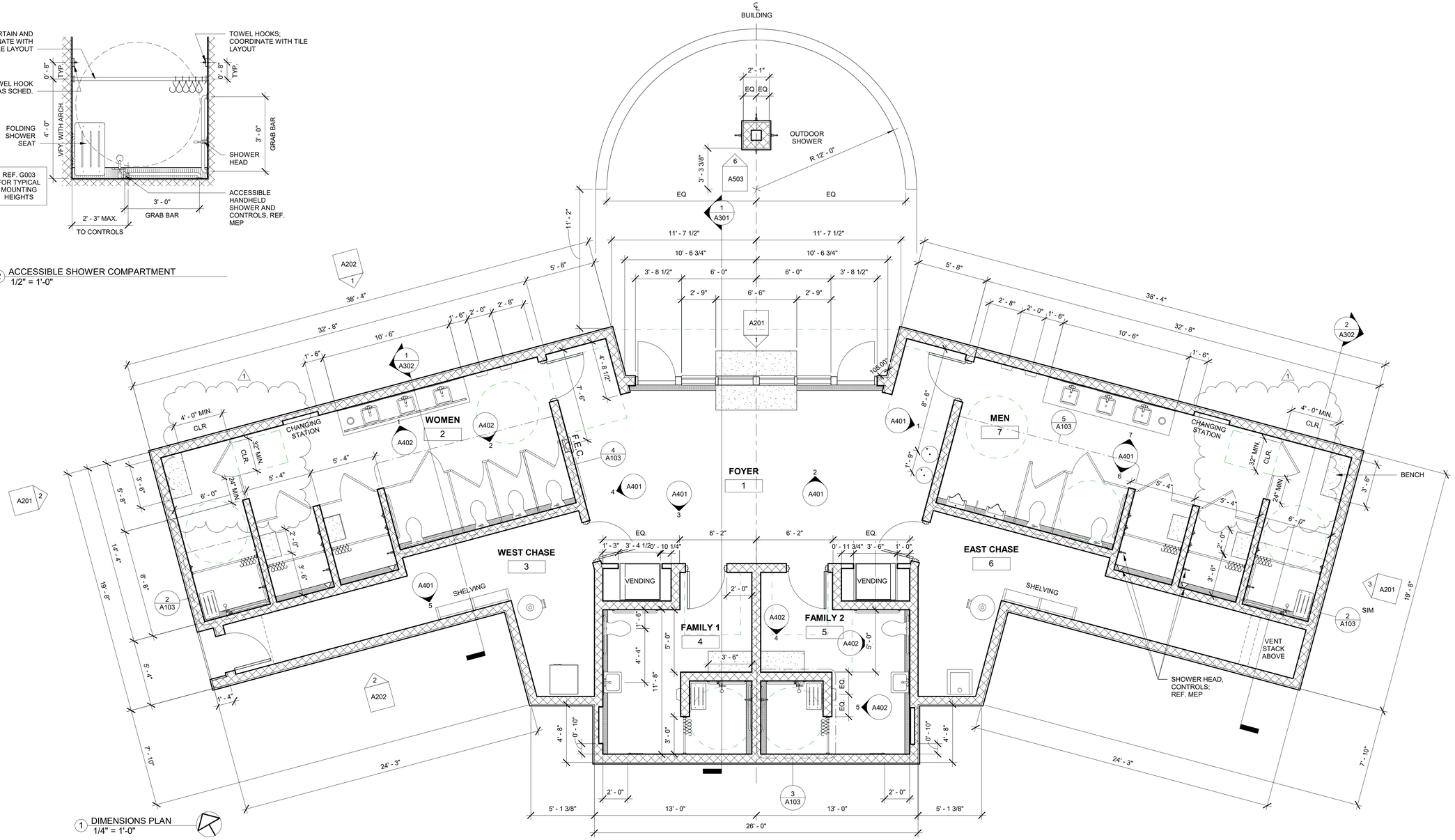

1 DIMENSIONS PLAN
1/4" = 1'-0"

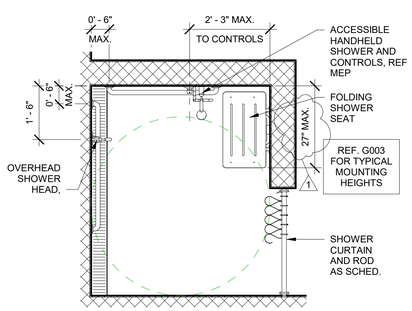

3 FAMILY RM SHOWER COMPARTMENT
1/2" = 1'-0"

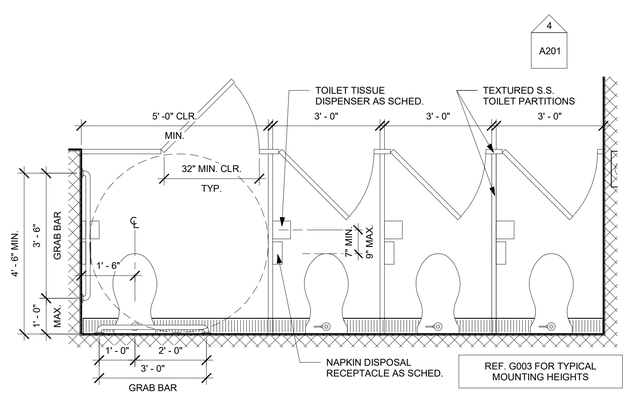

4 WOMEN'S ENLARGED PLAN
1/2" = 1'-0"

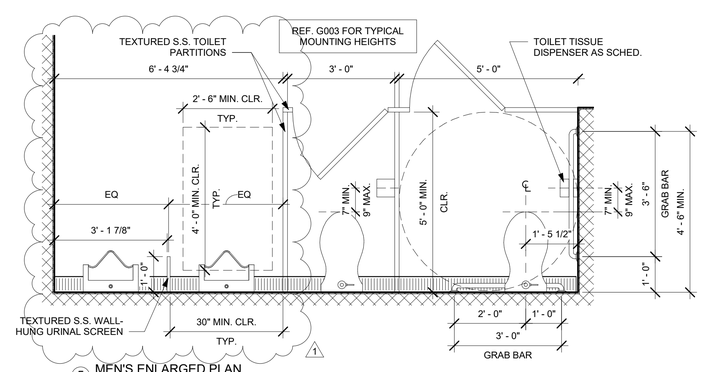

5 MEN'S ENLARGED PLAN
1/2" = 1'-0"

TEXAS PARKS & WILDLIFE

RICHTER ARCHITECTS

LAKE CORPUS CHRISTI STATE PARK
RESTROOM REPLACEMENT
PROJECT NUMBER 1210196A

ISSUE DATE: 12.22.2020

1 ADDENDUM 4 03.11.2021

REVISED:

REVISED:

PHASE: BIDDING

SHEET TITLE
DIMENSIONS

SHEET NUMBER
A103

REGISTERED ARCHITECT MARK LING RICHTER 20168 STATE OF TEXAS
12-04-20

C:\Users\mrich\OneDrive\Documents\22003.00 - TPWD Lake CC Restroom Replacement 201204_100%CD_mrichterHVBUU.rvt

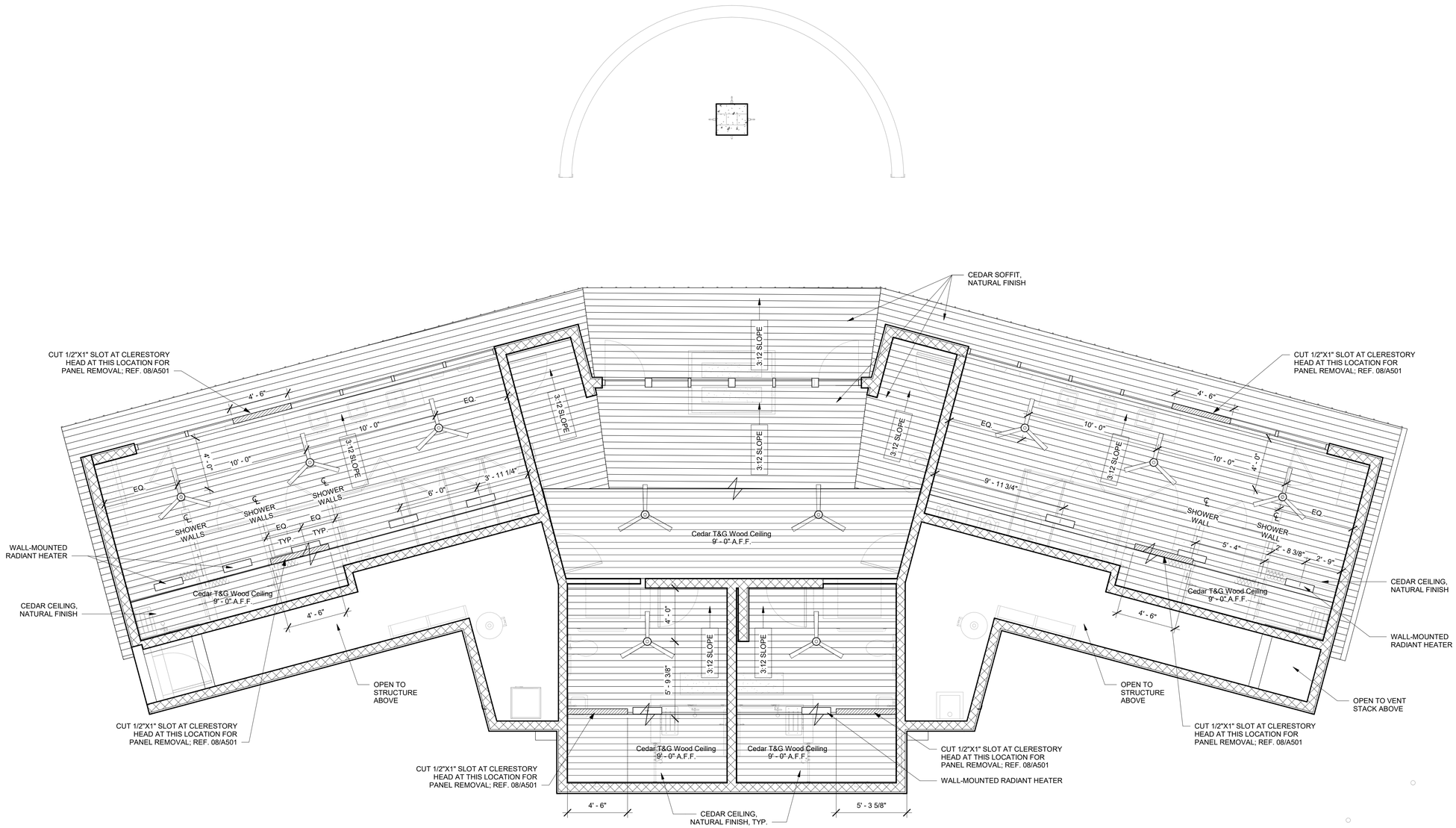

1 REFLECTED CEILING PLAN
1/4" = 1'-0"

TEXAS PARKS & WILDLIFE

RICHTER ARCHITECTS

LAKE CORPUS CHRISTI STATE PARK
RESTROOM REPLACEMENT
PROJECT NUMBER 1210196A

DATE: 12-22-2020
DESIGNED BY: DR/ECR
DRAWN BY: MRH
REVIEWED BY:
REVISED:

REVISED:

REVISED:

PHASE: 100% CONSTRUCTION DOCUMENTS

SHEET TITLE
CEILING PLAN

SHEET NUMBER
A104

REGISTERED ARCHITECT MAYA LING RICHTER 20468 STATE OF TEXAS
12-04-20

C:\Users\mrich\OneDrive\Documents\22003.00 - TPWD Lake CC Restroom\22003.00 - TPWD Lake CC Restroom Replacement 12-04_LT.rvt

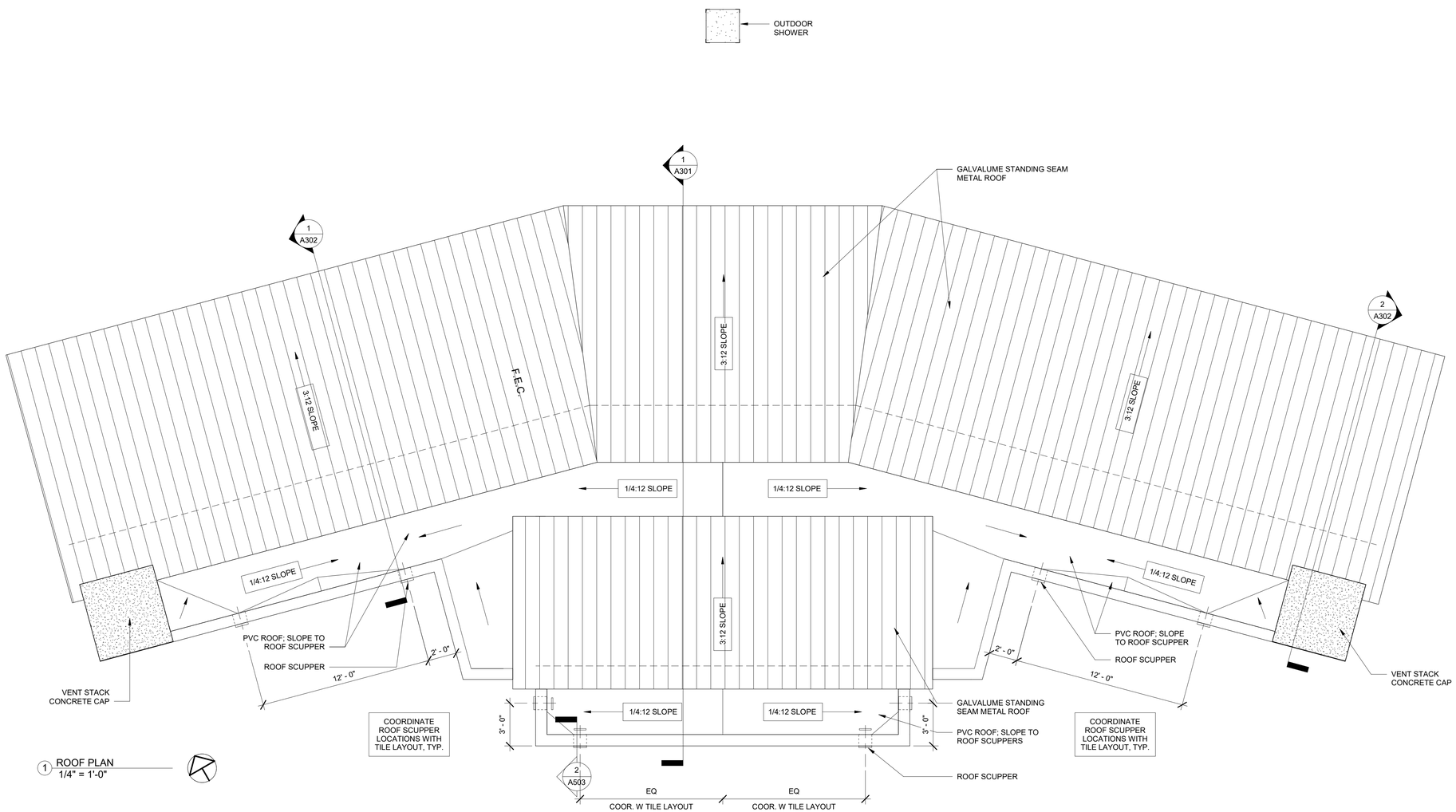

1 ROOF PLAN
1/4" = 1'-0"

TEXAS PARKS & WILDLIFE

RICHTER ARCHITECTS

LAKE CORPUS CHRISTI STATE PARK
RESTROOM REPLACEMENT
PROJECT NUMBER 1210196A

DATE: 12-22-2020
DESIGNED BY: DR/ECR
DRAWN BY: MRH
REVIEWED BY:
REVISED:

REVISED:

REVISED:

PHASE: 100% CONSTRUCTION DOCUMENTS

SHEET TITLE
ROOF PLAN

SHEET NUMBER
A105

REGISTERED ARCHITECT
MAYA LING RICHTER
20468
STATE OF TEXAS
12-04-20

C:\Users\mrich\OneDrive\Documents\22003.00 - TPWD Lake CC Restroom\22003.00 - TPWD Lake CC Restroom Replacement 12-04_LT.rvt

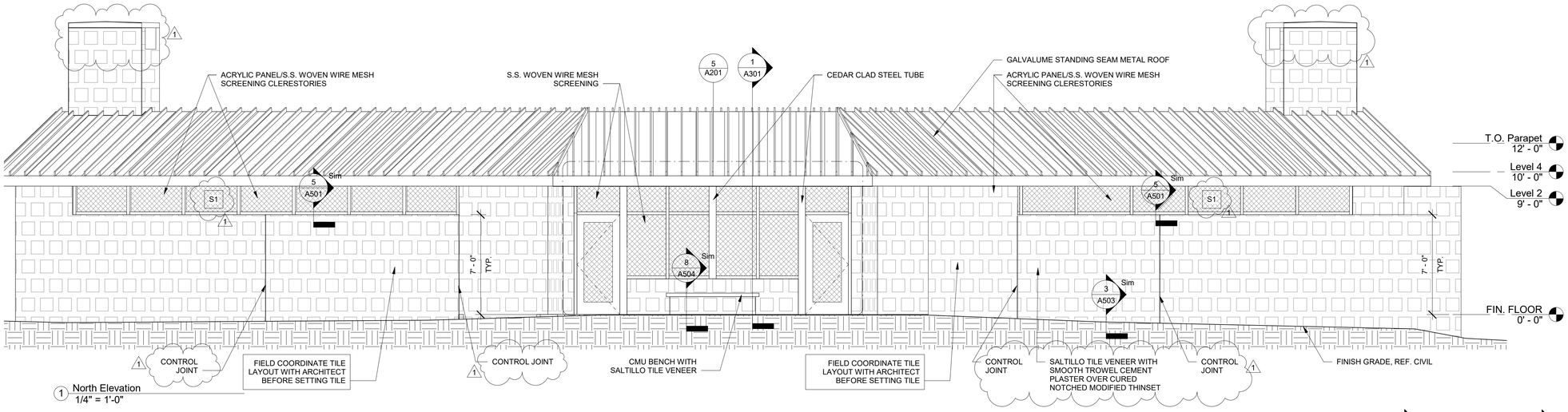

1 North Elevation
1/4" = 1'-0"

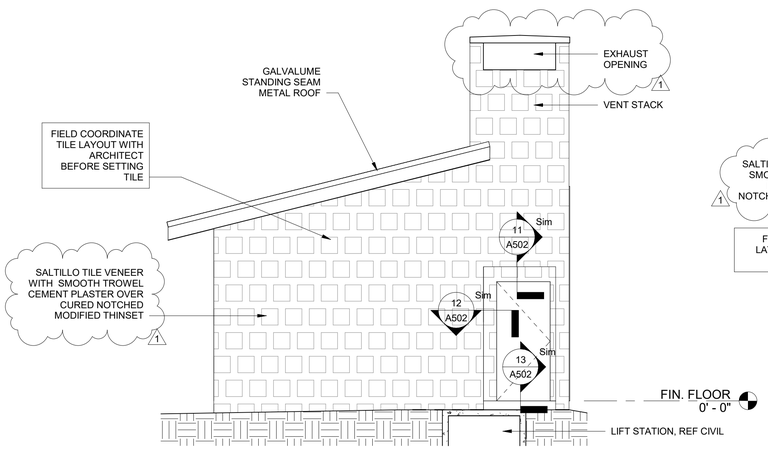

2 West Elevation
1/4" = 1'-0"

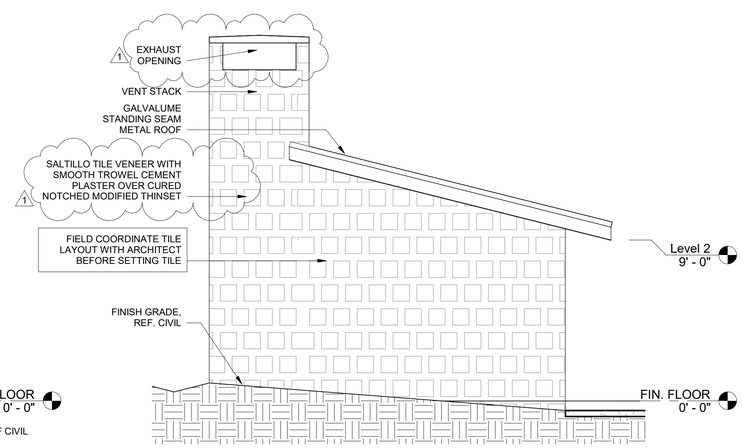

3 East Elevation
1/4" = 1'-0"

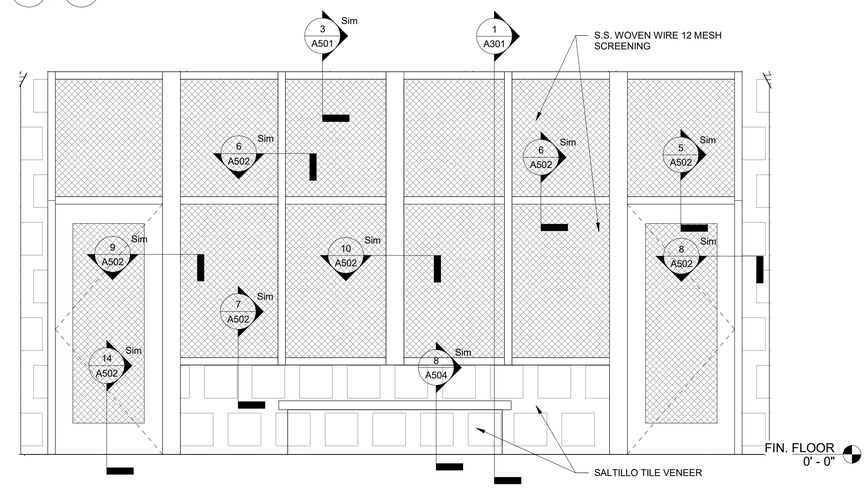

5 NORTH ELEVATION - ENLARGED
1/2" = 1'-0"

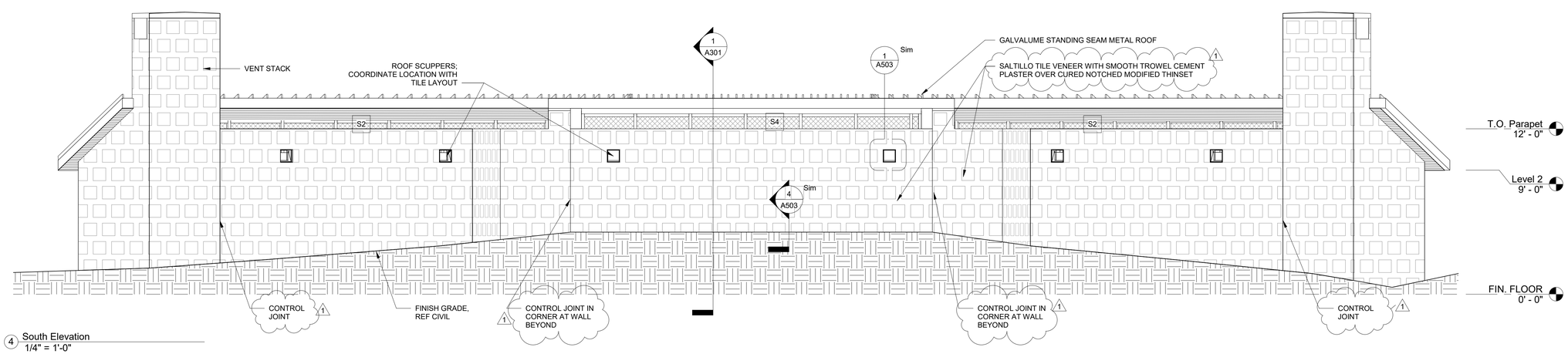

4 South Elevation
1/4" = 1'-0"

TEXAS PARKS & WILDLIFE

RICHTER ARCHITECTS

LAKE CORPUS CHRISTI STATE PARK
RESTROOM REPLACEMENT
PROJECT NUMBER 1210196A

ISSUE DATE:	12.22.2020
1	ADDENDUM 4 03.11.2021
REVISED:	
REVISED:	
PHASE: BIDDING	

SHEET TITLE
EXTERIOR ELEVATIONS

SHEET NUMBER
A201

REGISTERED ARCHITECT MARK LING RICHTER 20468 STATE OF TEXAS
12-04-20

C:\Users\mrich\OneDrive\Documents\22003.00 - TPWD Lake CC Restroom Replacement 201204_100%CD_mrichterHW9UU.rvt

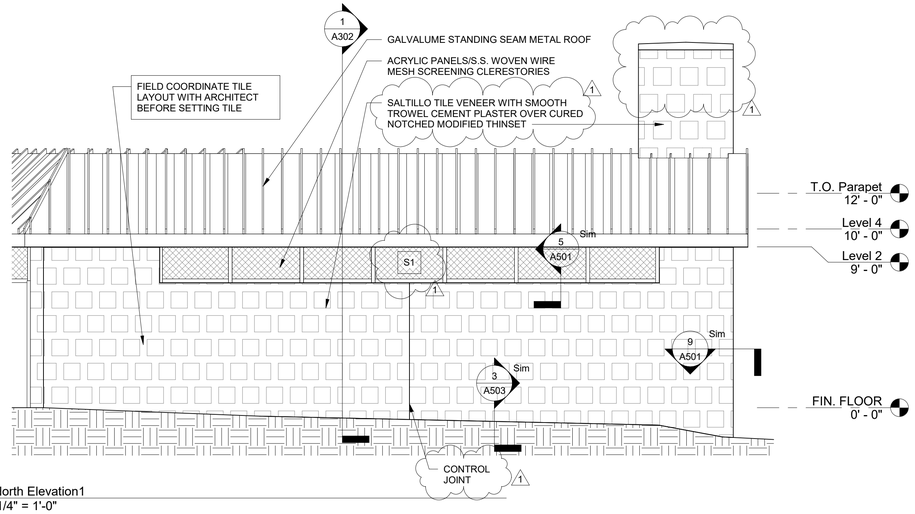

1 North Elevation1
1/4" = 1'-0"

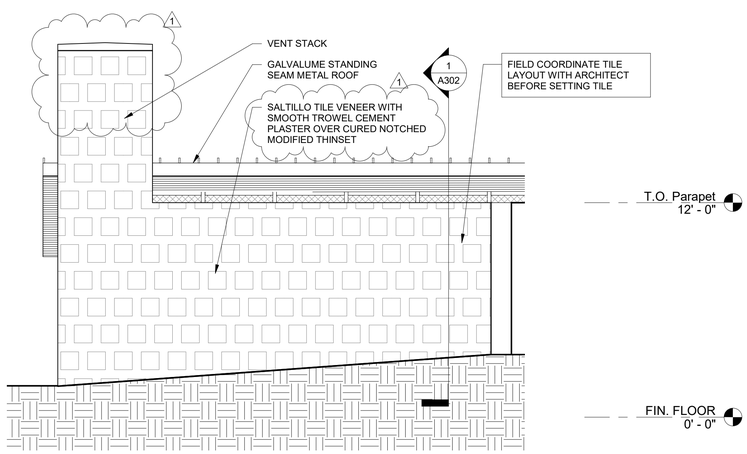

2 South Elevation 1
1/4" = 1'-0"

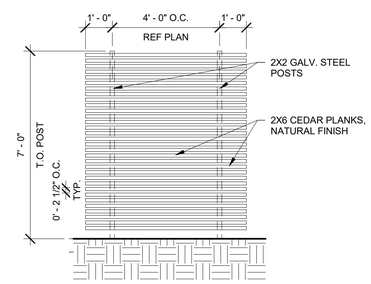

3 LIFT STATION SCREEN
3/8" = 1'-0"

TEXAS PARKS & WILDLIFE

RICHTER ARCHITECTS

LAKE CORPUS CHRISTI STATE PARK
RESTROOM REPLACEMENT
PROJECT NUMBER 1210196A

ISSUE DATE: 12.22.2020

1 ADDENDUM 4 03.11.2021

REVISED:

REVISED:

PHASE: BIDDING

SHEET TITLE
EXTERIOR ELEVATIONS

SHEET NUMBER
A202

REGISTERED ARCHITECT MAYA LING RICHTER 20168 STATE OF TEXAS
12-04-20

C:\Users\mrich\OneDrive\Documents\2003.00 - TPWD Lake CC Restroom Replacement 201204_100%CD_mrichterHW9UUJ.rvt

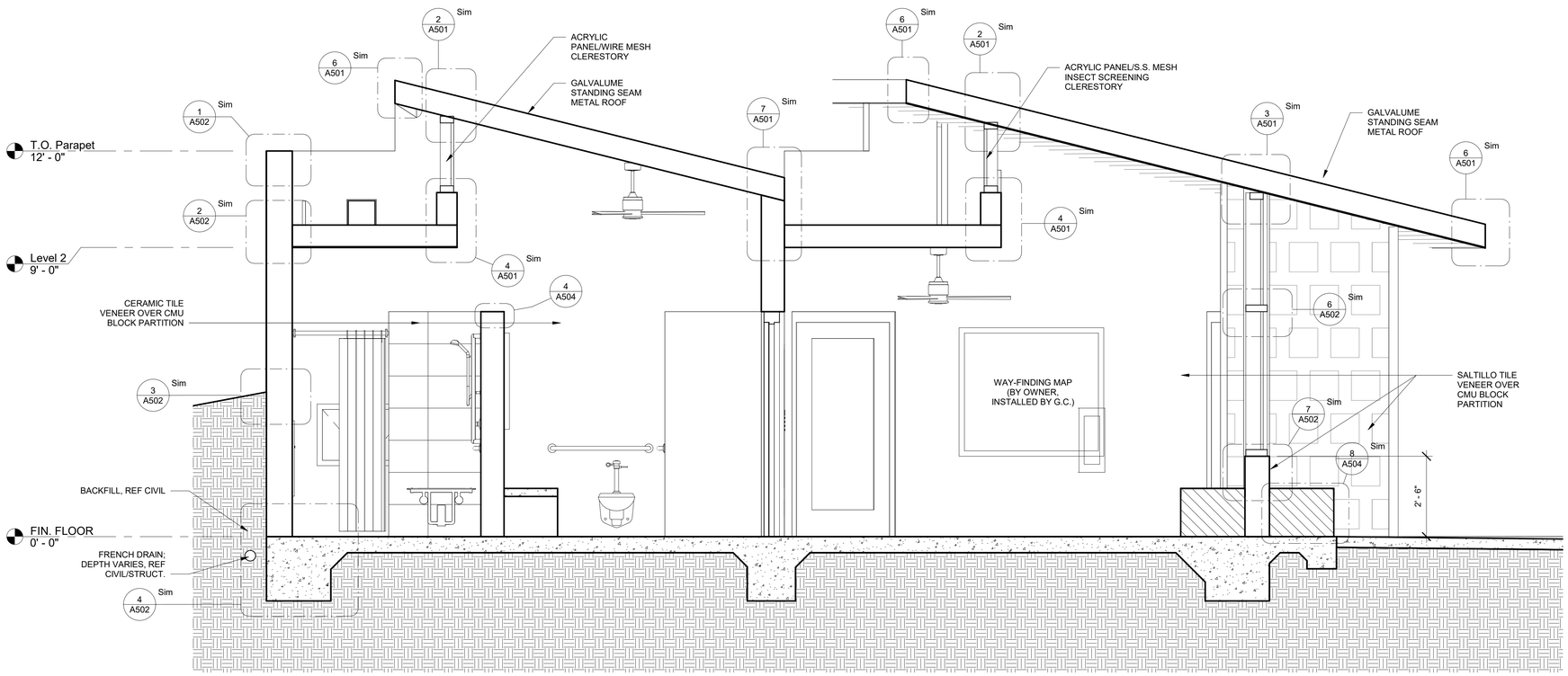

1 Section through Foyer and Family Room
1/2" = 1'-0"

TEXAS PARKS & WILDLIFE

RICHTER ARCHITECTS

LAKE CORPUS CHRISTI STATE PARK
RESTROOM REPLACEMENT
PROJECT NUMBER 1210196A

DATE: 12-22-2020
DESIGNED BY: DR/ECR
DRAWN BY: MRH
REVIEWED BY:
REVISED:

REVISED:

REVISED:

PHASE: 100% CONSTRUCTION DOCUMENTS

SHEET TITLE
BUILDING SECTIONS

SHEET NUMBER
A301

REGISTERED ARCHITECT
MAYA LING RICHTER
20468
STATE OF TEXAS
12-04-20

C:\Users\mrich\OneDrive\Documents\22003.00 - TPWD Lake CC Restroom\22003.00 - TPWD Lake CC Restroom Replacement 12-04_LT.rvt

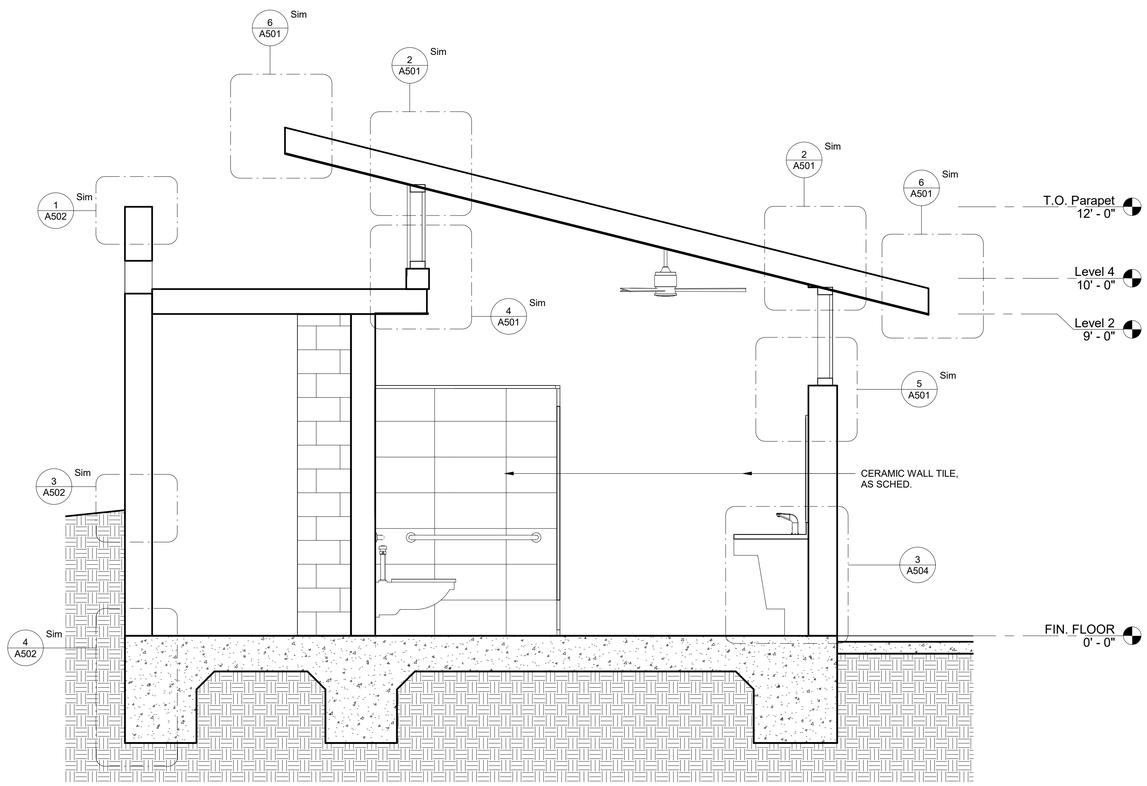

1 Section through Restrooms
1/2" = 1'-0"

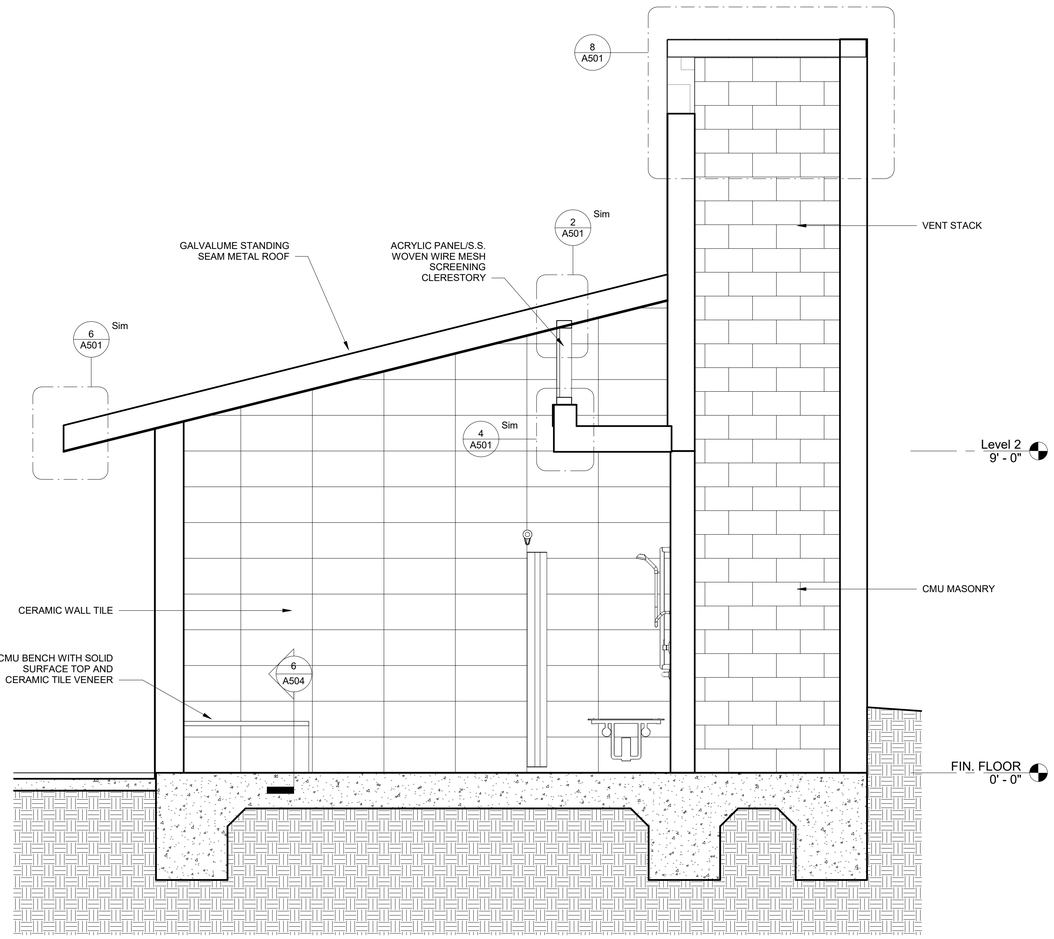

2 Section 1
1/2" = 1'-0"

TEXAS
PARKS &
WILDLIFE

RICHTER
ARCHITECTS

LAKE CORPUS CHRISTI STATE PARK
RESTROOM REPLACEMENT
PROJECT NUMBER 1210196A

DATE: 12-22-2020
DESIGNED BY: DR/ECR
DRAWN BY: MRH
REVIEWED BY:
REVISED:

REVISED:

REVISED:

PHASE: 100%
CONSTRUCTION
DOCUMENTS

SHEET TITLE
BUILDING
SECTIONS

SHEET NUMBER
A302

REGISTERED ARCHITECT
MARK LING RICHTER
20468
STATE OF TEXAS
12-04-20

C:\Users\mrich\OneDrive\Documents\22003.00 - TPWD Lake CC Restroom\22003.00 - TPWD Lake CC Restroom Replacement 12-04_LT.rvt

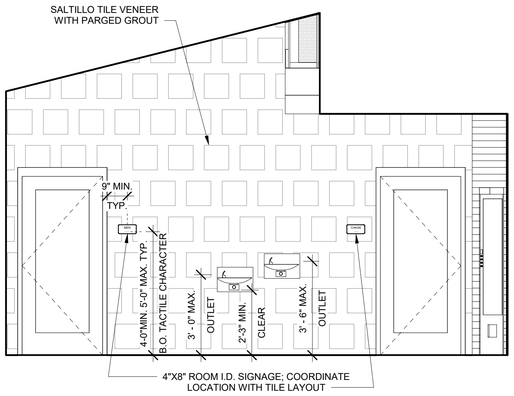

1 FOYER - EAST
3/8" = 1'-0"

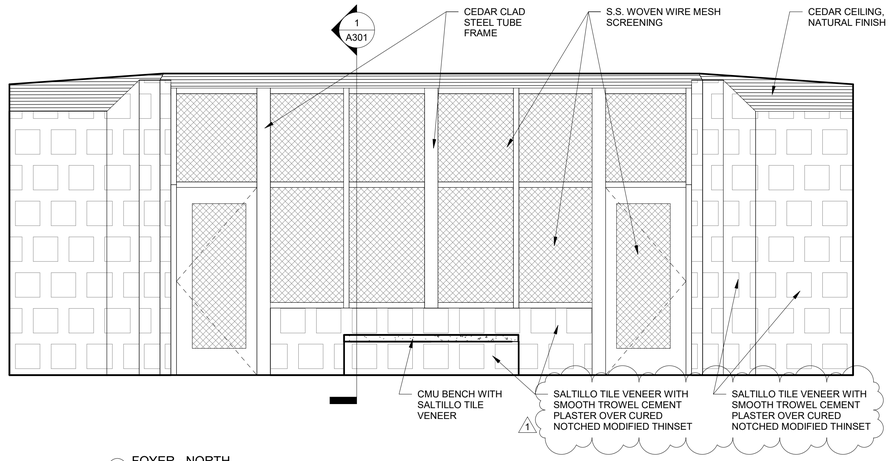

2 FOYER - NORTH
3/8" = 1'-0"

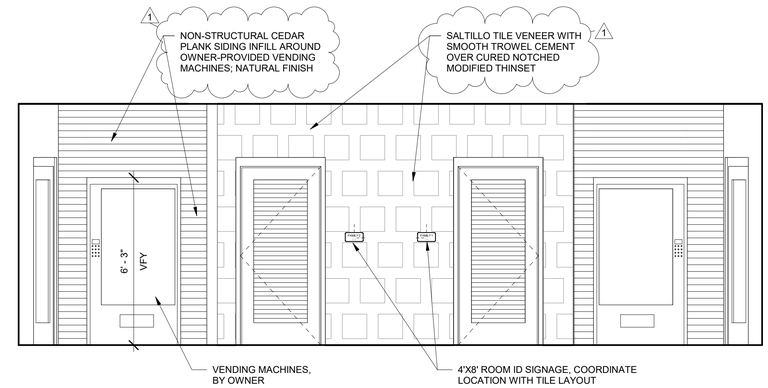

3 FOYER - SOUTH
3/8" = 1'-0"

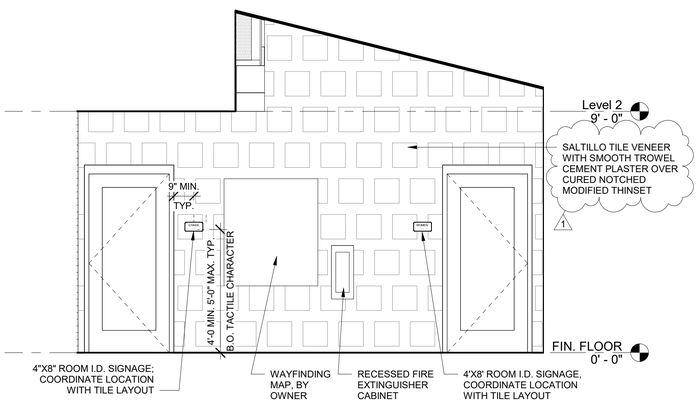

4 FOYER - WEST
3/8" = 1'-0"

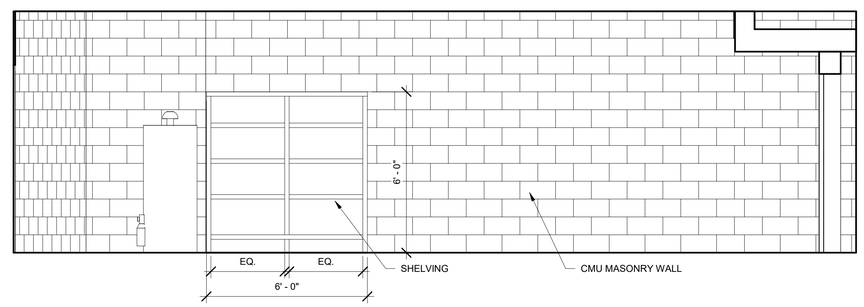

5 STORAGE - SOUTH
3/8" = 1'-0"

REF. SHEET G003 FOR TYPICAL FIXTURE MOUNTING HEIGHTS

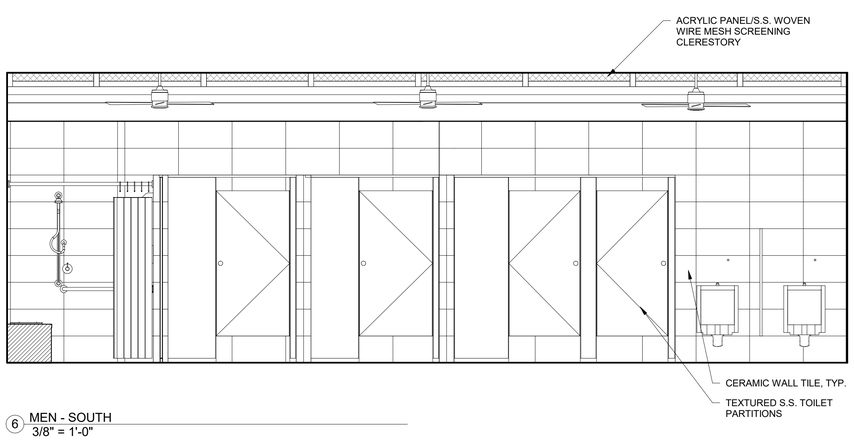

6 MEN - SOUTH
3/8" = 1'-0"

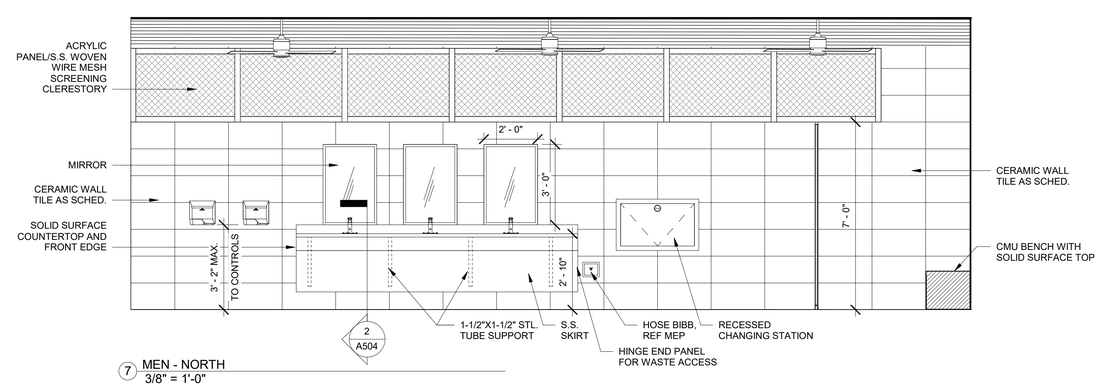

7 MEN - NORTH
3/8" = 1'-0"

TEXAS PARKS & WILDLIFE

RICHTER ARCHITECTS

LAKE CORPUS CHRISTI STATE PARK
RESTROOM REPLACEMENT
PROJECT NUMBER 121019 6A

ISSUE DATE:	12.22.2020
1	ADDENDUM 4 03.11.2021
REVISED:	
REVISED:	
PHASE: BIDDING	

SHEET TITLE
INTERIOR ELEVATIONS

SHEET NUMBER
A401

REGISTERED ARCHITECT MAYA LING RICHTER 20468 STATE OF TEXAS
12-04-20

C:\Users\mrich\OneDrive\Documents\22003.00 - TPWD Lake CC Restroom Replacement 201204_100%CD_mrichterHW9UU.rvt

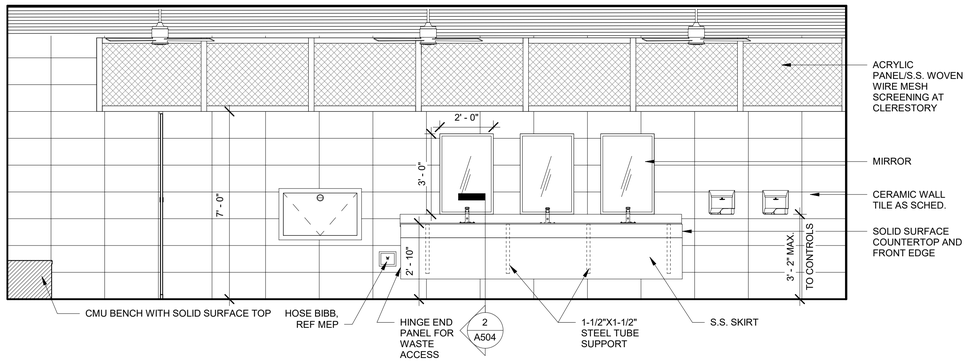

1 WOMEN - NORTH
3/8" = 1'-0"

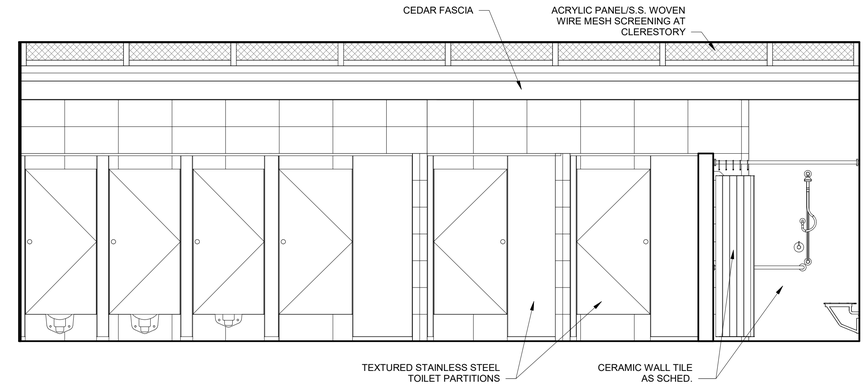

2 WOMEN - SOUTH
3/8" = 1'-0"

REF. SHEET G003 FOR TYPICAL FIXTURE MOUNTING HEIGHTS

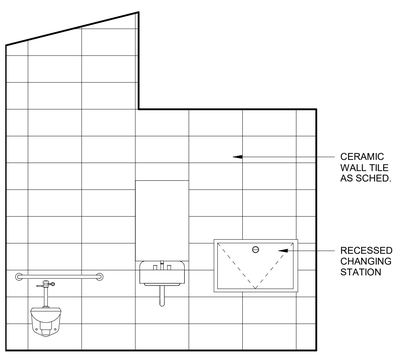

3 FAMILY - EAST
3/8" = 1'-0"

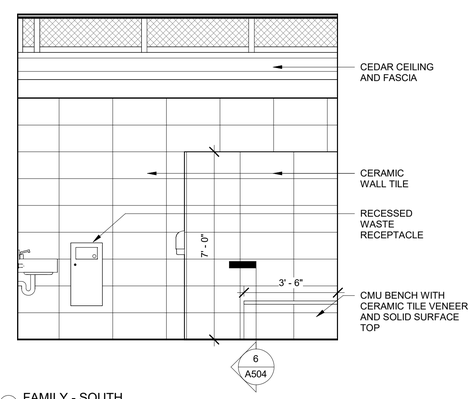

4 FAMILY - SOUTH
3/8" = 1'-0"

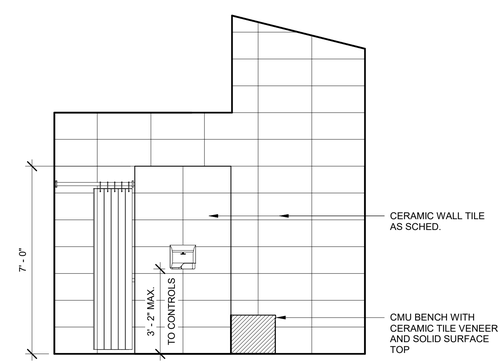

5 FAMILY - WEST
3/8" = 1'-0"

TEXAS PARKS & WILDLIFE

RICHTER ARCHITECTS

LAKE CORPUS CHRISTI STATE PARK
RESTROOM REPLACEMENT
PROJECT NUMBER 1210196A

DATE: 12-22-2020
DESIGNED BY: DR/ECR
DRAWN BY: MRH
REVIEWED BY:
REVISED:
REVISED:
REVISED:
PHASE: 100% CONSTRUCTION DOCUMENTS

SHEET TITLE
INTERIOR ELEVATIONS

SHEET NUMBER
A402

REGISTERED ARCHITECT MAYA LING RICHTER 20488 STATE OF TEXAS
12-04-20

C:\Users\mrich\OneDrive\Documents\22003.00 - TPWD Lake CC Restroom\22003.00 - TPWD Lake CC Restroom Replacement 12-04_LT.rvt

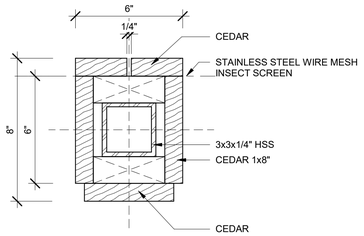

1 - PLAN DETAIL - TYPICAL POST
3" = 1'-0"

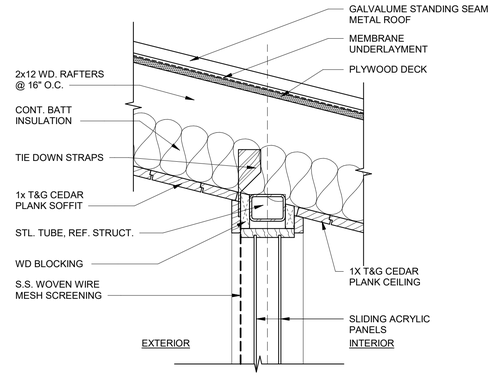

2 - SECTION DETAIL @ TYP. CLERESTORY HEAD
1 1/2" = 1'-0"

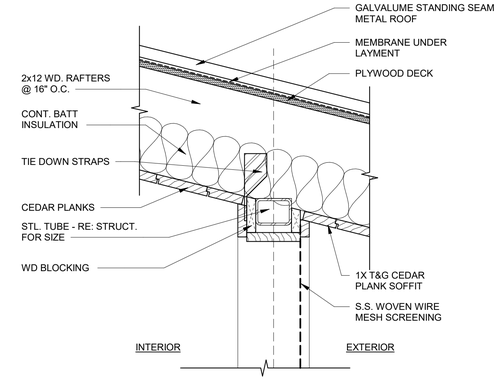

3 - SECTION DETAIL AT FOYER
1 1/2" = 1'-0"

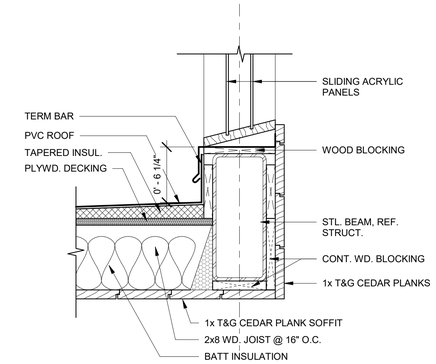

4 - DETAIL
1 1/2" = 1'-0"

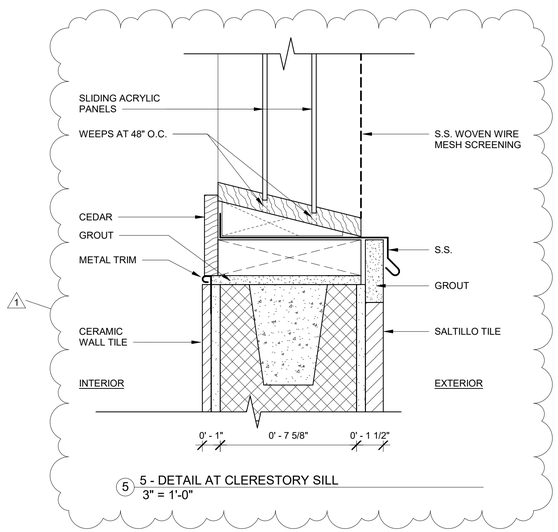

5 - DETAIL AT CLERESTORY SILL
3" = 1'-0"

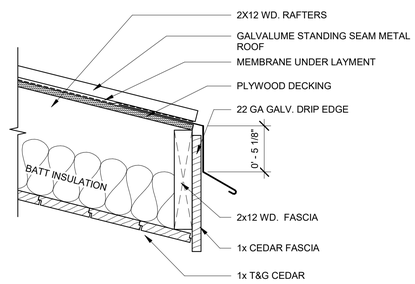

6 - FASCIA DETAIL
1 1/2" = 1'-0"

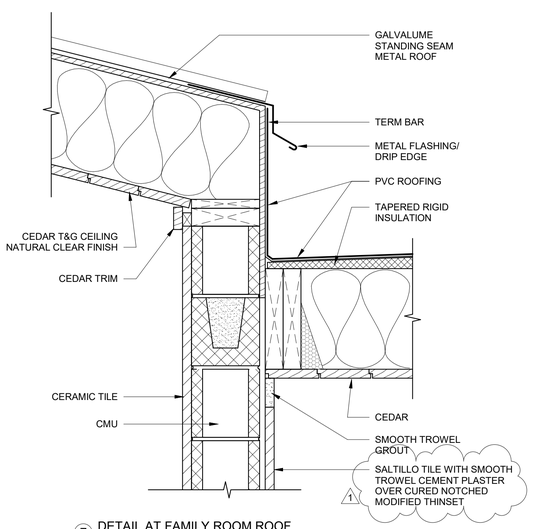

7 DETAIL AT FAMILY ROOM ROOF
1 1/2" = 1'-0"

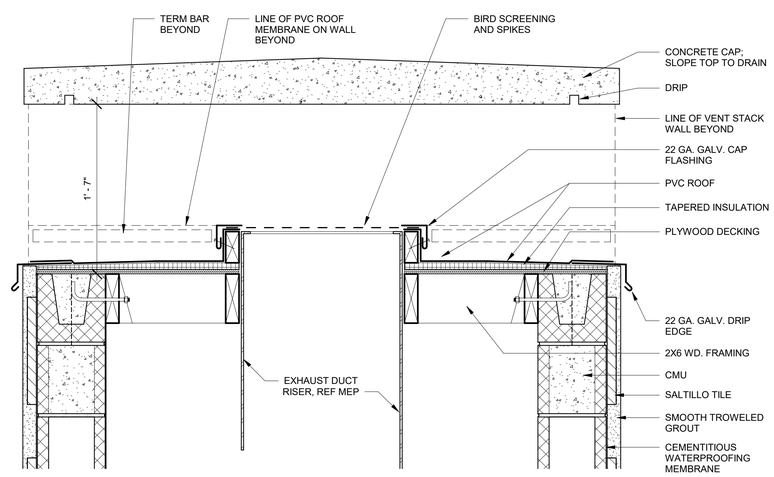

8 SECTION AT VENT STACK
1 1/2" = 1'-0"

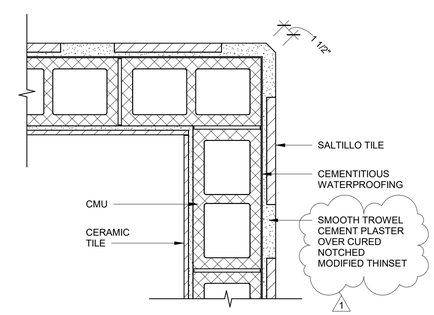

11 - PLAN DETAIL AT TYP. OUTSIDE CORNER
1 1/2" = 1'-0"

TEXAS PARKS & WILDLIFE

RICHTER ARCHITECTS

LAKE CORPUS CHRISTI STATE PARK
RESTROOM REPLACEMENT
PROJECT NUMBER 1210196A

ISSUE DATE: 12.22.2020

1 ADDENDUM 4 03.11.2021

REVISED:

REVISED:

PHASE: BIDDING

SHEET TITLE
DETAILS

SHEET NUMBER
A501

REGISTERED ARCHITECT MAYA LING RICHTER 20168 STATE OF TEXAS
12-04-20

C:\Users\mrich\OneDrive\Documents\22003.00 - TPWD Lake CC Restroom Replacement 201204_100%CD_mrichterHW9UU.rvt

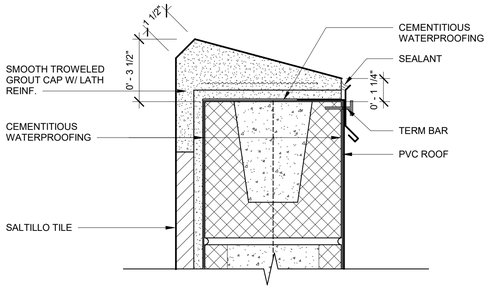

1 12 - DETAIL AT PARAPET
3" = 1'-0"

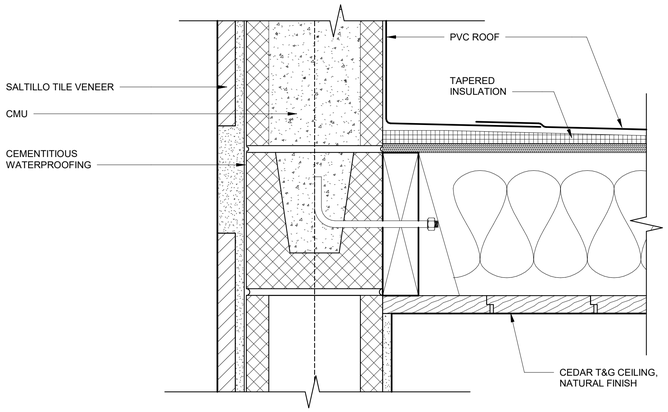

2 13 - DETAIL1
3" = 1'-0"

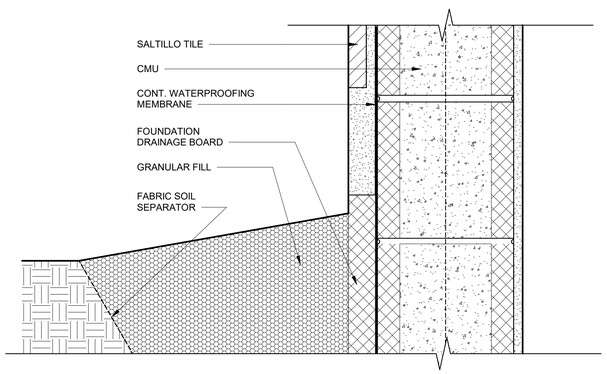

3 14 - DETAIL1
3" = 1'-0"

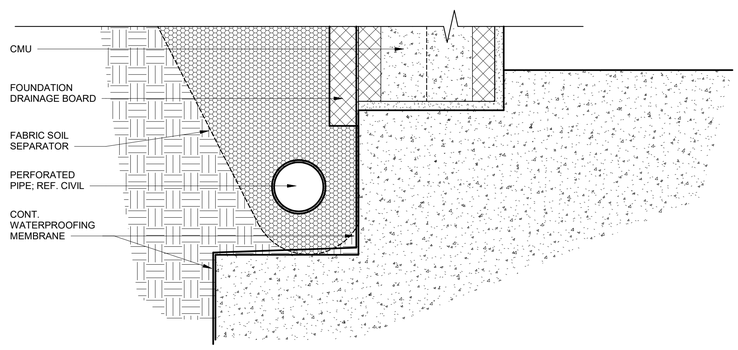

4 15 - DETAIL1
3" = 1'-0"

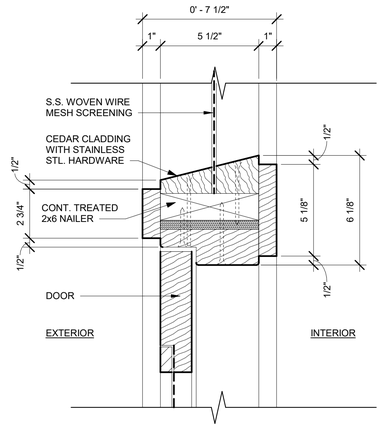

5 17 - HEAD DETAIL @ FOYER DOOR ENTRANCE
3" = 1'-0"

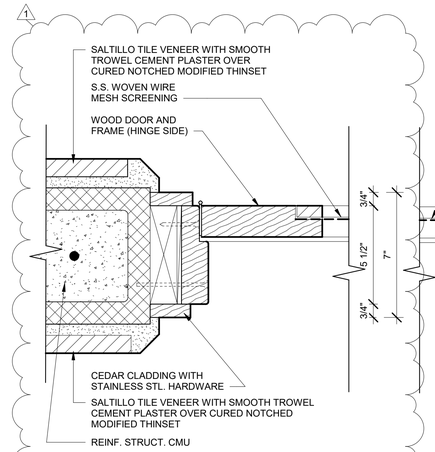

8 19 - JAMB DETAIL @ FOYER DOOR ENTRANCE/EXT. WALL
3" = 1'-0"

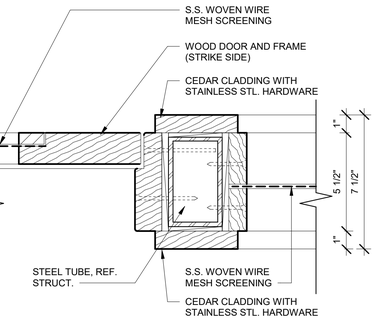

9 20 - JAMB DETAIL @ FOYER DOOR ENTRANCE/STL. COLUMN
3" = 1'-0"

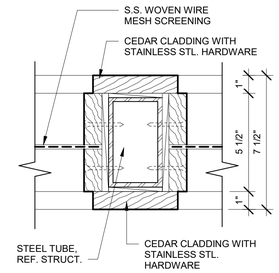

10 21 - JAMB DETAIL @ FOYER WINDOW/STL. COLUMN
3" = 1'-0"

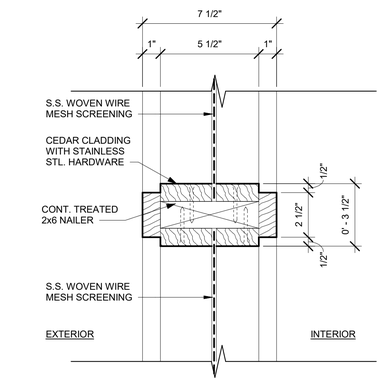

6 18 - HEAD/SILL DETAIL @ FOYER WINDOW
3" = 1'-0"

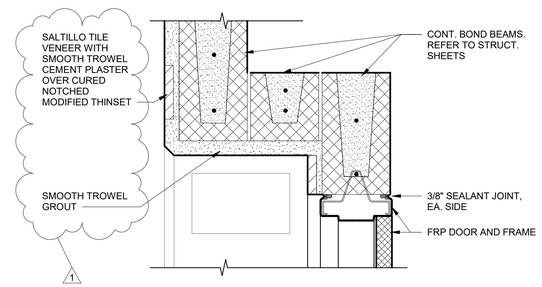

11 24 - DOOR D1-6 HEAD
1 1/2" = 1'-0"

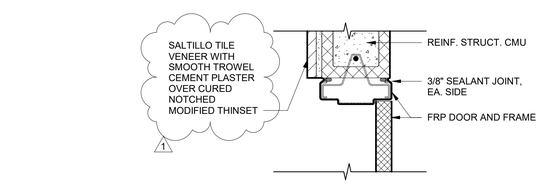

12 25 - DOOR D1-6 JAMB
1 1/2" = 1'-0"

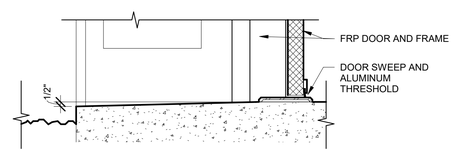

13 26 - DOOR D1-6 SILL
1 1/2" = 1'-0"

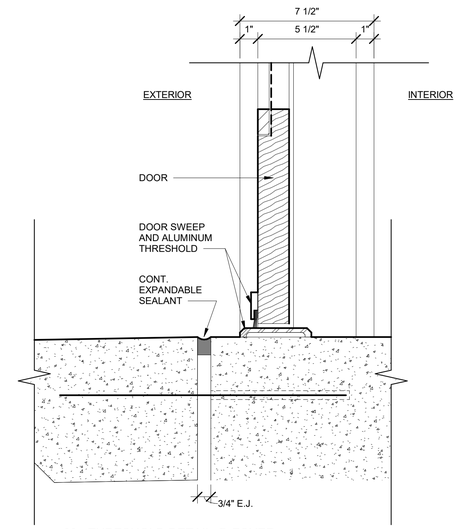

14 23 - THRESHOLD DETAIL @ FOYER DOOR ENTRANCE
3" = 1'-0"

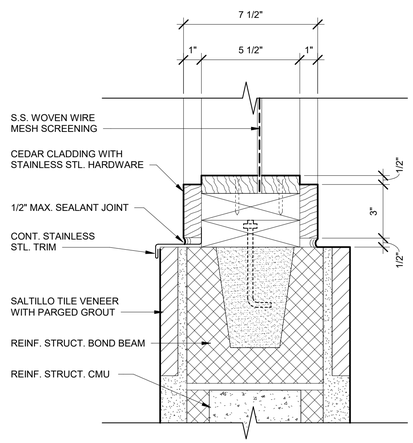

7 22 - SILL DETAIL @ FOYER WINDOW (ABOVE CONC. BENCH)
3" = 1'-0"

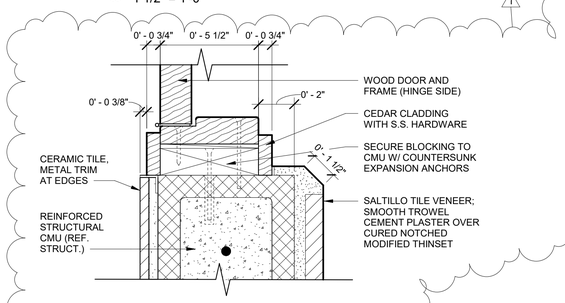

15 JAMB DETAIL @ FOYER INT. DOOR
3" = 1'-0"

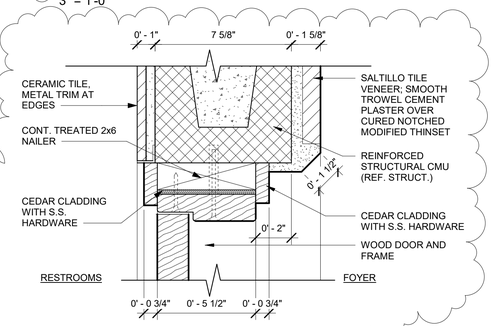

16 HEAD DETAIL @ FOYER INT. DOOR
3" = 1'-0"

TEXAS PARKS & WILDLIFE

RICHTER ARCHITECTS

LAKE CORPUS CHRISTI STATE PARK
RESTROOM REPLACEMENT
PROJECT NUMBER 1210196A

ISSUE DATE:	12.22.2020
1	ADDENDUM 4 03.11.2021
REVISED:	
REVISED:	
PHASE: BIDDING	

SHEET TITLE
DETAILS

SHEET NUMBER
A502

REGISTERED ARCHITECT MARK LING RICHTER 20168 STATE OF TEXAS
12-04-20

C:\Users\mrich\OneDrive\Documents\22003.00 - TPWD Lake CC Restroom Replacement 201204_100%CD_mrichterHWUUJ.rvt

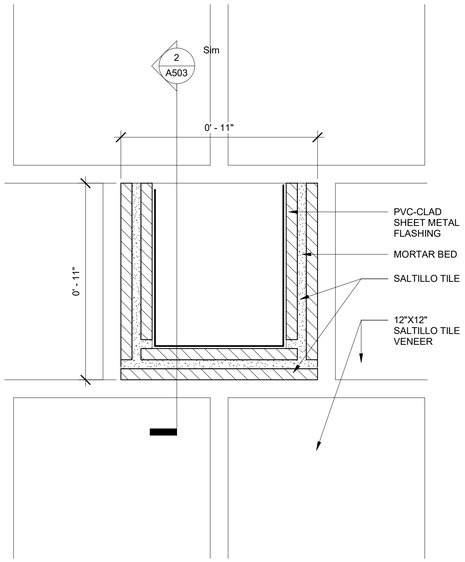

1 ELEVATION AT ROOF SCUPPER
3" = 1'-0"

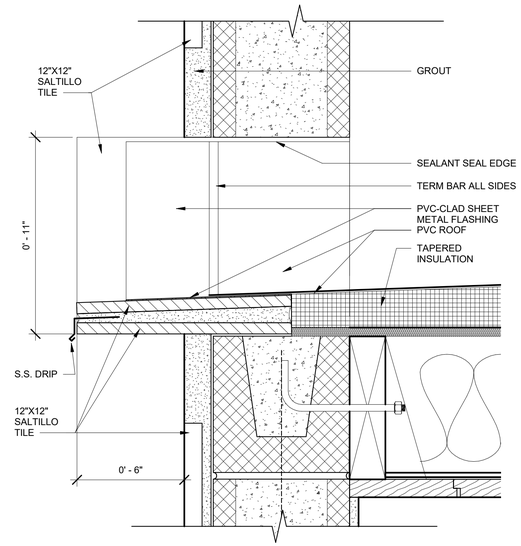

2 SECTION AT ROOF SCUPPER
3" = 1'-0"

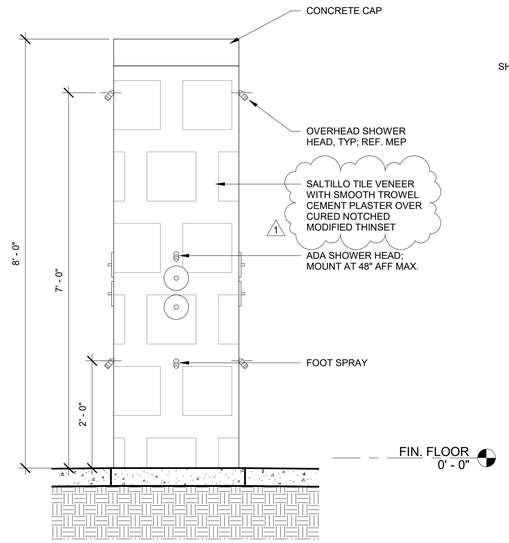

6 ELEVATION AT OUTDOOR SHOWER
3/4" = 1'-0"

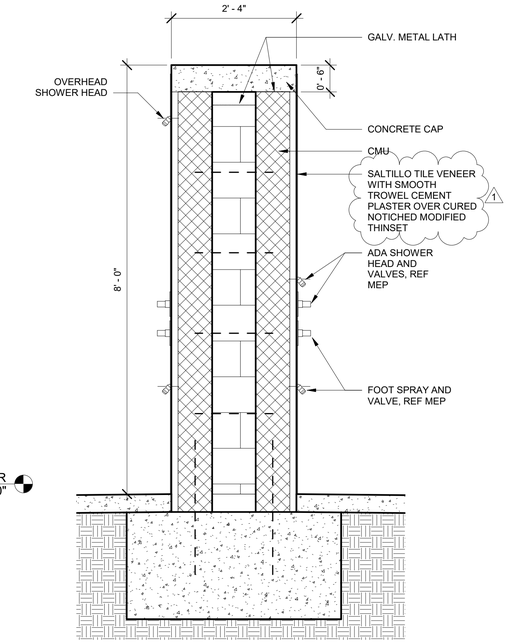

7 SECTION AT OUTDOOR SHOWER
3/4" = 1'-0"

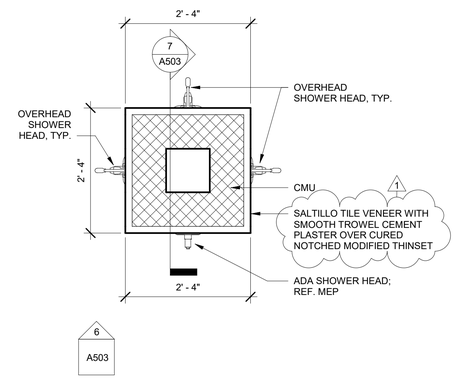

5 OUTDOOR SHOWER ENLARGED PLAN
3/4" = 1'-0"

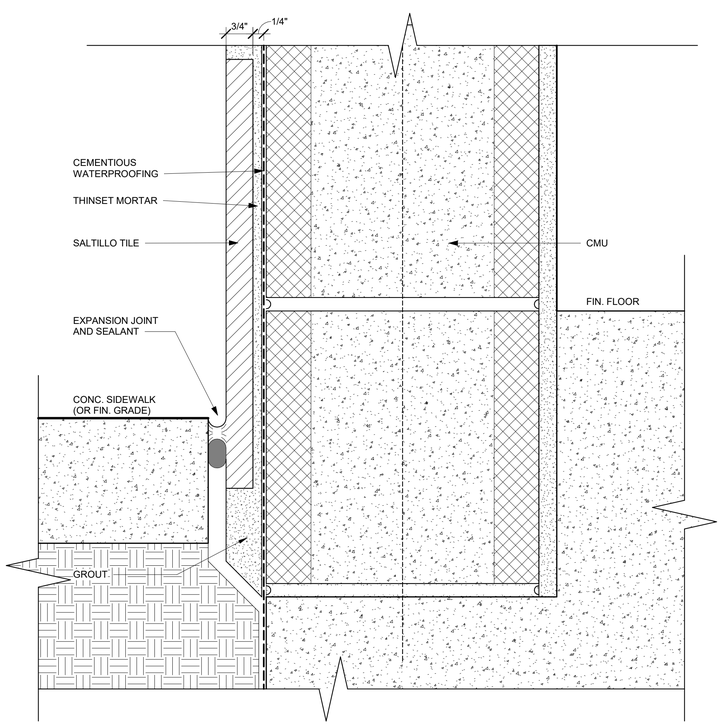

3 WALL BASE - FIN. GRADE BELOW F.F.
6" = 1'-0"

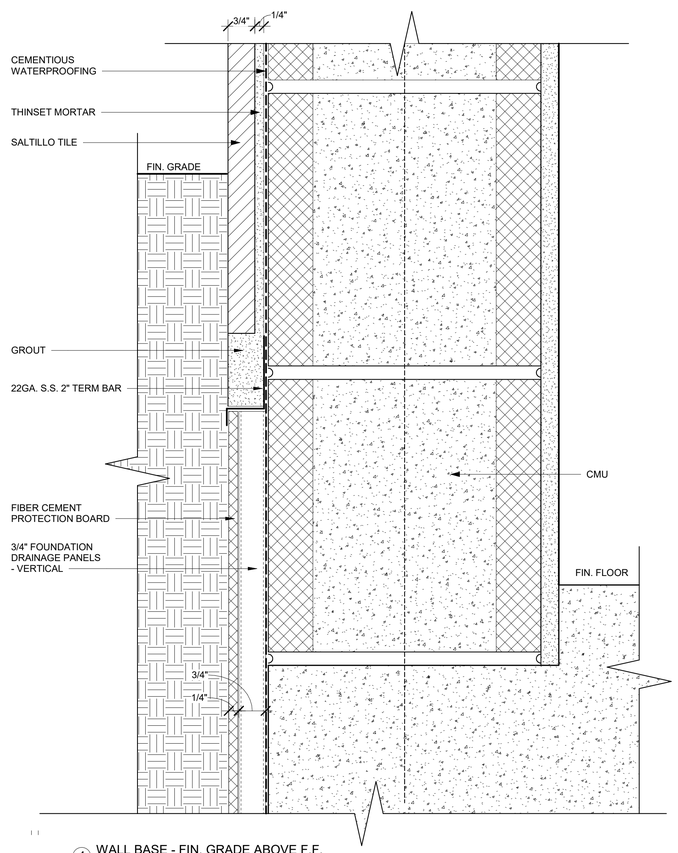

4 WALL BASE - FIN. GRADE ABOVE F.F.
6" = 1'-0"

TEXAS PARKS & WILDLIFE

RICHTER ARCHITECTS

LAKE CORPUS CHRISTI STATE PARK
RESTROOM REPLACEMENT
PROJECT NUMBER 1210196A

ISSUE DATE:	12.22.2020
1	ADDENDUM 4 03.11.2021
REVISED:	
REVISED:	
PHASE: BIDDING	

SHEET TITLE
DETAILS

SHEET NUMBER
A503

REGISTERED ARCHITECT MARK LING RICHTER 20468 STATE OF TEXAS
12-04-20

C:\Users\mrich\OneDrive\Documents\22003.00 - TPWD Lake CC Restroom Replacement 201204_100%CD_mrichterHW9UJ.rvt

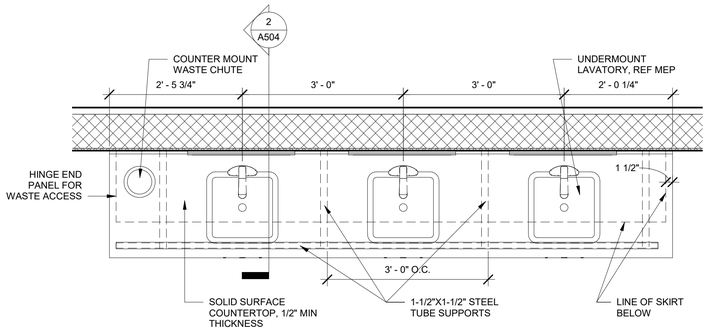

1 RESTROOM LAVATORY ENLARGED PLAN
3/4" = 1'-0"

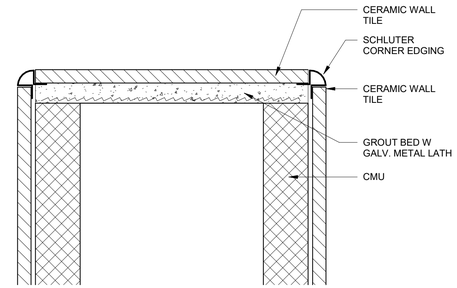

4 DETAIL AT FAMILY RM SHOWER WALL
6" = 1'-0"

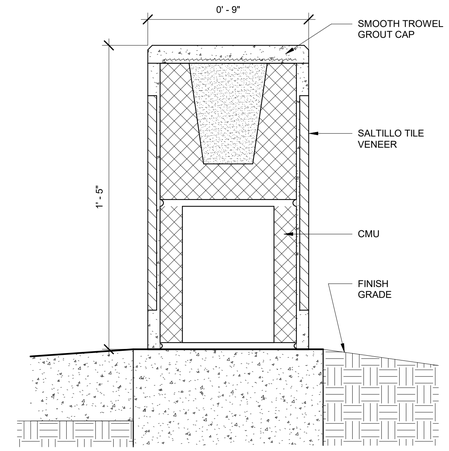

7 SECTION AT OUTDOOR CURVED WALL
3" = 1'-0"

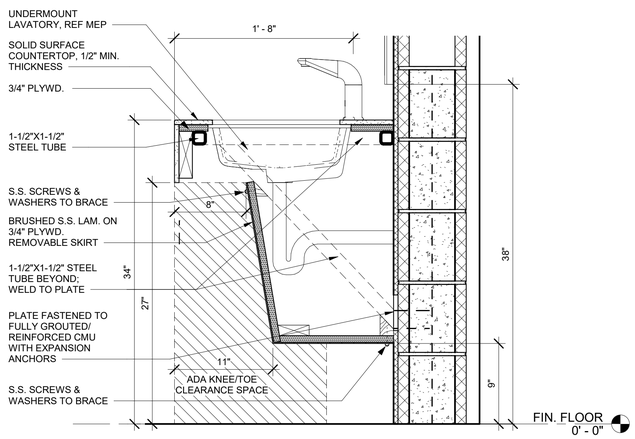

2 SECTION AT RESTROOM COUNTER
1 1/2" = 1'-0"

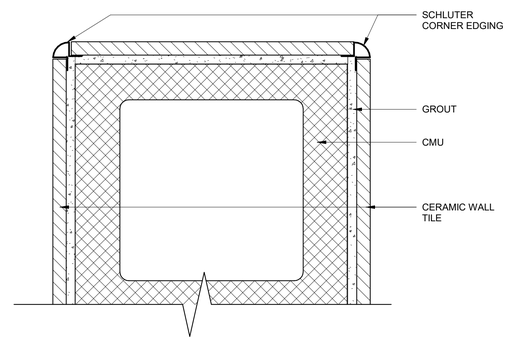

5 PLAN DETAIL AT FAMILY ROOM SHOWER WALL
6" = 1'-0"

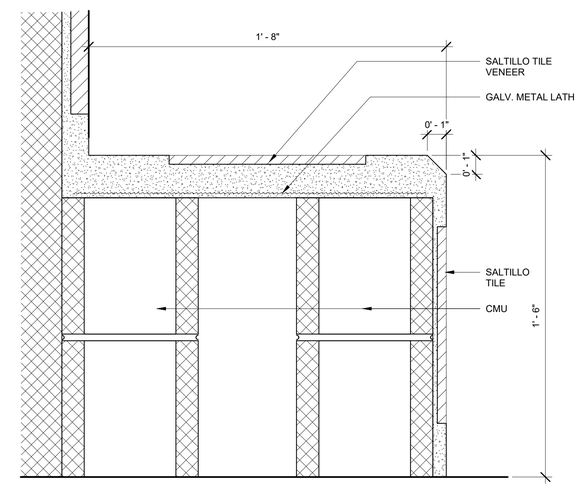

8 27 - DETAIL @ FOYER BENCH
3" = 1'-0"

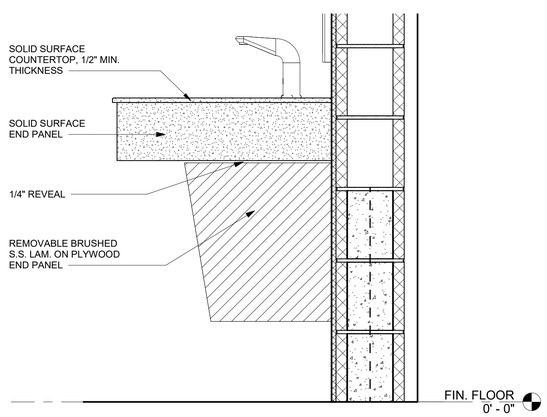

3 END PANEL AT RESTROOM COUNTER
1 1/2" = 1'-0"

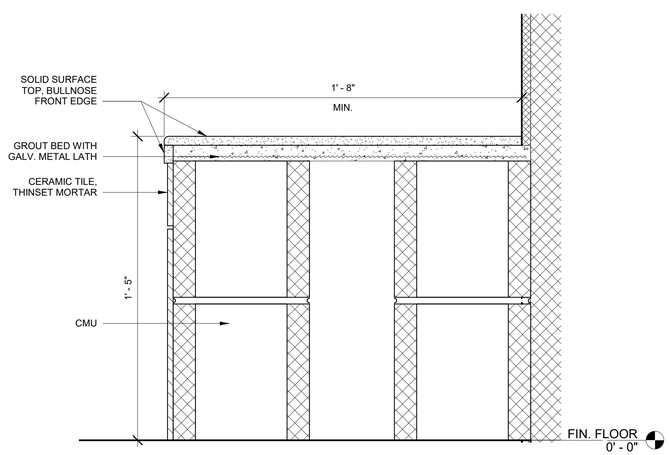

6 SECTION AT TYP. SHOWER BENCH
3" = 1'-0"

TEXAS PARKS & WILDLIFE

RICHTER ARCHITECTS

LAKE CORPUS CHRISTI STATE PARK
RESTROOM REPLACEMENT
PROJECT NUMBER 1210196A

DATE: 12-22-2020
DESIGNED BY: DR/ECR
DRAWN BY: MRH
REVIEWED BY:
REVISED:
REVISED:
REVISED:
PHASE: 100% CONSTRUCTION DOCUMENTS

SHEET TITLE
DETAILS

SHEET NUMBER
A504

REGISTERED ARCHITECT
MARK LING RICHTER
20468
STATE OF TEXAS
12-04-20

C:\Users\mrich\OneDrive\Documents\22003.00 - TPWD Lake CC Restroom\22003.00 - TPWD Lake CC Restroom Replacement 12-04_LT.rvt

ROOM FINISH SCHEDULE

Room	Name	Floor Finish	Wall Finish	Base Finish	Ceiling Finish	Other
1	FOYER	12"X24" TEXTURED PORCELAIN TILE, DALTILE UNITY SERIES, COLOR P405 ASHGREY	12"X12" SALTILLO TILE WITH PARGED GROUT; NATURAL FINISH CEDAR TRIM	NONE	CEDAR T&G PLANK CEILING, NATURAL FINISH	CEDAR T&G PLANK AT VENDING FURR-OUT
2	WOMEN	12"X24" TEXTURED PORCELAIN TILE, DALTILE UNITY SERIES, COLOR P405 ASHGREY	12"X24" GLAZED CERAMIC TILE, DALTILE SHOWSCAPE SERIES, GLOSSY, COLOR: SH09 STYLISH WHITE	NONE	CEDAR T&G PLANK CEILING, NATURAL FINISH	COUNTERTOP, BENCH TOP: LIVINGSTONE SOLID SURFACE "TERRA NOVA"
3	WEST CHASE	SEALED CONCRETE	PAINT	NONE	EXPOSED TO STRUCTURE	
4	FAMILY 1	12"X24" TEXTURED PORCELAIN TILE, DALTILE UNITY SERIES, COLOR P405 ASHGREY	12"X24" GLAZED CERAMIC TILE, DALTILE SHOWSCAPE SERIES, GLOSSY, COLOR: SH09 STYLISH WHITE	NONE	CEDAR T&G PLANK CEILING, NATURAL FINISH	BENCH TOP: LIVINGSTONE SOLID SURFACE "TERRA NOVA"
5	FAMILY 2	12"X24" TEXTURED PORCELAIN TILE, DALTILE UNITY SERIES, COLOR P405 ASHGREY	12"X24" GLAZED CERAMIC TILE, DALTILE SHOWSCAPE SERIES, GLOSSY, COLOR: SH09 STYLISH WHITE	NONE	CEDAR T&G PLANK CEILING	BENCH TOP: LIVINGSTONE SOLID SURFACE "TERRA NOVA"
6	EAST CHASE	SEALED CONCRETE	PAINT	NONE	EXPOSED TO STRUCTURE	
7	MEN	12"X24" TEXTURED PORCELAIN TILE, DALTILE UNITY SERIES, COLOR P405 ASHGREY	12"X24" GLAZED CERAMIC TILE, DALTILE SHOWSCAPE SERIES, GLOSSY, COLOR: SH09 STYLISH WHITE	NONE	CEDAR T&G PLANK CEILING, NATURAL FINISH	COUNTERTOP, BENCH TOP: LIVINGSTONE SOLID SURFACE "TERRA NOVA"

DOOR SCHEDULE

Mark	Width	Height	Thickness	Door Type	Door Material	Frame Type	Frame Material	Hardware Set Code	Comments
D1-1	3' - 0"	7' - 0"	0' - 1 3/4"	A	WOOD/WIRE MESH	1	WOOD	1	DOOR/FRAME NATURAL FINISH, REF. SPECIFICATIONS
D1-2	3' - 0"	7' - 0"	0' - 1 3/4"	A	WOOD/WIRE MESH	1	WOOD	1	DOOR/FRAME NATURAL FINISH, REF. SPECIFICATIONS
D1-6	3' - 0"	6' - 8"	0' - 2"	E	FRP FLAT PANEL	1	FRP	4	
D2-1	3' - 0"	6' - 8"	0' - 1 3/4"	B	WOOD	1	WOOD	2	DOOR/FRAME NATURAL FINISH, REF. SPECIFICATIONS
D2-2	3' - 0"	6' - 8"	0' - 1 3/4"	B	WOOD	1	WOOD	3	UNDERCUT DOOR 1 1/2" FOR AIR CIRCULATION; DOOR/FRAME NATURAL FINISH, REF. SPECIFICATIONS
D2-3	3' - 0"	6' - 8"	0' - 1 3/4"	C	WOOD	1	WOOD	2	DOOR/FRAME NATURAL FINISH, REF. SPECIFICATIONS
D2-4	3' - 0"	6' - 8"	0' - 1 3/4"	C	WOOD	1	WOOD	2	DOOR/FRAME NATURAL FINISH, REF. SPECIFICATIONS
D2-5	3' - 0"	6' - 8"	0' - 1 3/4"	B	WOOD	1	WOOD	3	UNDERCUT DOOR 1 1/2" FOR AIR CIRCULATION; DOOR/FRAME NATURAL FINISH, REF. SPECIFICATIONS
D2-6	3' - 0"	6' - 8"	0' - 1 3/4"	B	WOOD	1	WOOD	2	DOOR/FRAME NATURAL FINISH, REF. SPECIFICATIONS

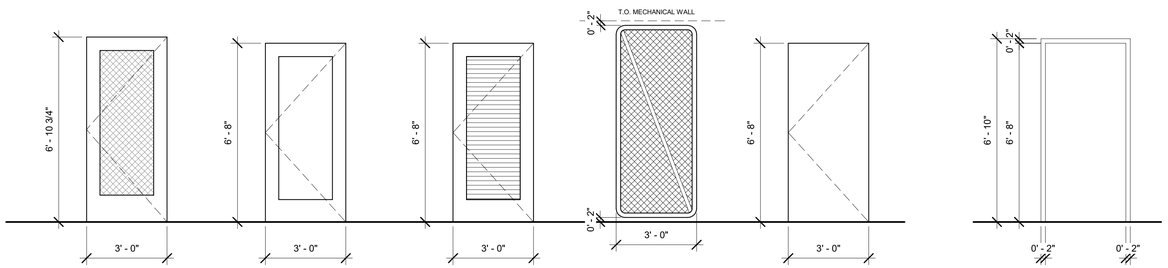

TYPE A
WD STILE AND RAIL WITH INSECT SCREENING MESH PANEL

TYPE B
WD STILE AND RAIL WITH WD. PANEL

TYPE C
WD STILE AND RAIL WITH LOUVERED PANEL

TYPE D
METAL GATE
(BID ALT. NO. 1)

TYPE E
FRP FLAT PANEL

TYPE 1
WD OR FRP FRAME AS REQUIRED

DOOR TYPES

FRAME TYPE

HARDWARE SETS

Hardware Set 1
DOOR MARK: D1-1, D1-2 *(Foyer Entrance)*

Each to Receive:

3	EA	HINGE	TA2314 4.5 X 4.5 (NRP)	32D	MC
1	EA	LOCKSET			
1	EA	CLOSER	1430-PS-POSITIVE STOP	EN	SA
1	EA	THRESHOLD	896HDVDKB		
1	EA	WEATHERSTRIPPING	9002A	NA	

Hardware Set 2
DOOR MARK: D2-1, D2-6 *(Women's/Men's Restrooms)*

Each to Receive:

3	EA	HINGE	T4A3786 (4.5X4.5)	US32D	MC
1	EA	PUSH/PULL PLATE	1820-2 3"X4.5", 630-SS	US32D	TR
1	EA	DEADBOLT	10-63U24LY	26D	SA
1	EA	KICKPLATE			
1	EA	CLOSER	1430-PS-POSITIVE STOP	EN	SA
1	EA	WALL STOP	234W	US32D	HA

Hardware Set 3
DOOR MARK: D2-3, D2-4 *(Family Rooms)*

Each to Receive:

3	EA	HINGE	T4A3786 (4.5X4.5)	US32D	MC
1	EA	PUSH/PULL PLATE	1820-2 3"X4.5", 630-22	630-SS	TR
1	EA	DEADBOLT	10-63U24LY	26D	SA
1	EA	KICKPLATE	190S 10" X 34" SS	US32D	HA
1	EA	CLOSER			
1	EA	WALL STOP	234W	US32D	HA

Hardware Set 4
DOOR MARK: D2-2, D2-5 *(West/East Chase Interior)*

Each to Receive:

3	EA	HINGE	T4A3786 (4.5X4.5)	US32D	MC
1	EA	PUSH/PULL PLATE	1820-2 3"X4.5", 630-22	630-SS	TR
1	EA	DEADBOLT	10-63U24LY	26D	SA
1	EA	KICKPLATE	190S 10" X 34" SS	US32D	HA
1	EA	DEADBOLT	485B Single Cyl.	US32D	SA
1	EA	CLOSER	1431-UO – Universal Mount	EB	SA
1	EA	WALL STOP	236W	US32D	HA
1	EA	KICK PLATE*	190S 10" x 34"	US32D	HA
1	EA	THRESHOLD	896HDVDKB x 72"	NA	

**Provide with TORX screw fasteners*

Hardware Set 5
DOOR MARK: D1-6 *(West Chase Exterior)*

Each to Receive:

4	EA	HINGE	T4A3786 (4.5 X4.5)	US32D	MC
1	EA	LOCKSET	10-63GD4LY	US32D	SA
1	EA	DEADBOLT	485B Single Cyl.	US32D	SA
1	EA	KICK PLATE (Interior)*	190S 10" x 34"	\US32D	HA
1	SET	WEATHERSTRIPPING	9002A	NA	
1	EA	DOOR BOTTOM	345DV	PEM	
1	EA	THRESHOLD	896HDVDKB x 72"	NA	

**Provide with TORX screw fasteners*

Hardware Set 6
DOOR MARK: PROVIDE AT ALL STAINLESS STEEL TOILET PARTITION/SHOWER ENCLOSURE DOORS *(Rooms 4 & 5)*
Coordinate hardware with toilet partition door manufacturer

Each to Receive:

1	EA	HINGE (Continuous)	#9A7599	US32D	RB
1	EA	DEADBOLT	485B Single Cyl.	US32D	SA

REF. SPECIFICATIONS FOR ADDITIONAL INFORMATION

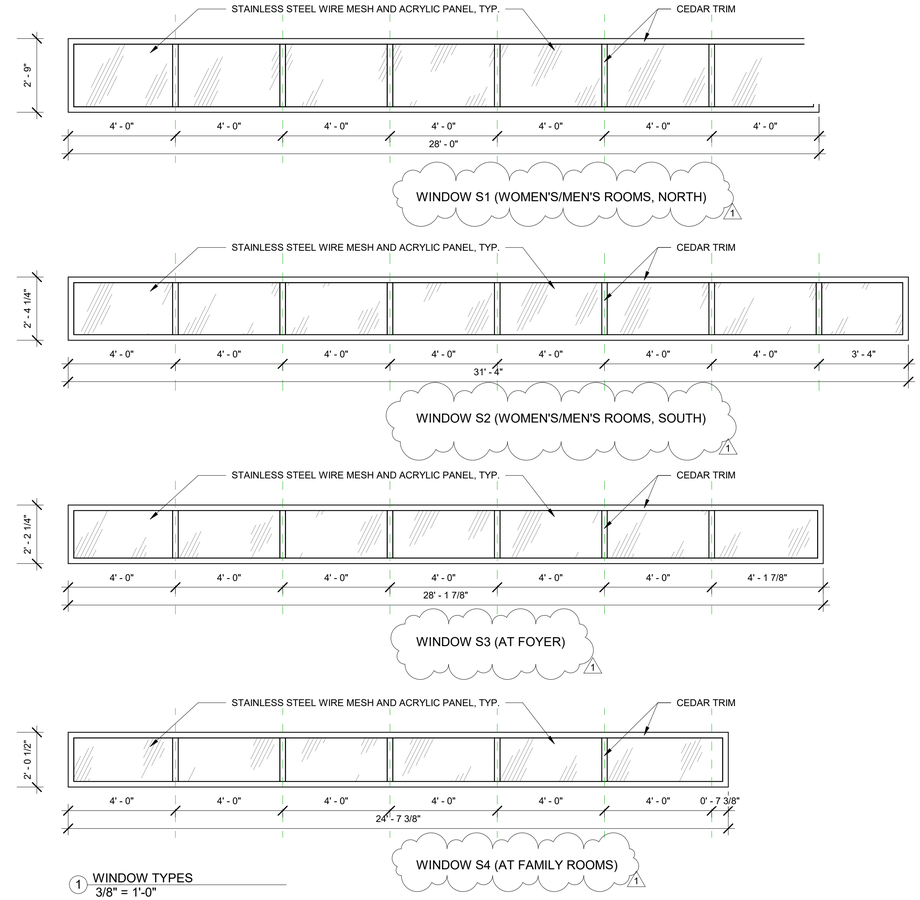

1 WINDOW TYPES
3/8" = 1'-0"

TOILET ACCESSORIES SCHEDULE

Toilet Accessory	Count	Manufacturer	Model	Color/Finish	Comments
Exterior Site Waste Receptacles	2	Pilot Rock	Square Receptacle,- Side Door, Steel Strap, 36 gal	Powder Coated, Green	
Exterior Site Waste Receptacles, Mount	2	Pilot Rock	Embedded Elevated Pedestal Mount for 36 gal Receptacle	Powder Coated, Green	
Exterior Site Waste Receptacles, Lid	2	Pilot Rock	Square Steel Lid, 10" Diameter with Rain Cover	Powder Coated, Green	
Exterior Site Waste Receptacles, Liner	2	Pilot Rock	Heavy Duty Rigid Plastic Liner, 36 gal	N/A	
Countertop Waste Chute	2	Bobrick	B-529 Countertop-Mounted Circular Waste Chute	Stainless Steel	
Undercounter Waste Receptacle	2	N/A	23 gallon slim garbage container	N/A	
Toilet Paper Dispenser	8	Bobrick	B-4288 ConturaSeries Surface-Mounted Multi-Roll Toilet Tissue Dispenser	Satin Finish Stainless Steel	
Sanitary Napkin Disposal	4	Bobrick	B-270 ConturaSeries Surface-Mounted Sanitary Napkin Disposal	Satin Finish Stainless Steel	
Baby Changing Station	4	Koala Kare	KB110-SSRE Recess-Mounted Horizontal Baby Changing Station	Stainless Steel	
Hand Dryer	6	World Dryer	SLIMdri Hand Dryer	Brushed Chrome or White	
Soap Dispenser	6	GOJO	Gojo-Skilcraft ADX-12 Dispenser	Black/Chrome	
Toilet Partitions		Metpar	Vandal-Resistant, Floor-Mount, Overhead-Braced	Textured Stainless Steel, 5SM	Ref. plan for dimensions
Family Room Recessed Waste Receptacles	2	Bobrick	B-35633 TrimLineSeries, Recessed Waste Receptacle with Disposal Door	Satin Finish Stainless Steel	
Lavatory Mirrors	8	Bobrick	B-2908 2436 Series Tempered Glass Welded-Frame Mirror	Satin Finish Stainless Steel	
Towel Hooks	16	Bobrick	B-983 Vandal-Resistant Clothes Hook	Satin Finish Stainless Steel	
Shower Curtain Rod (Accessible Showers)	2	Bobrick	B-6107 x 72 ClassicSeries Heavy Duty Shower Curtain Rod	Satin Finish Stainless Steel	
Shower Curtain Rod	4	Bobrick	B-6107 x 60 ClassicSeries Heavy Duty Shower Curtain Rod	Satin Finish Stainless Steel	
Shower Curtain Rod (Family Rooms)	2	Bobrick	B-6107 x 36 ClassicSeries Heavy Duty Shower Curtain Rod	Satin Finish Stainless Steel	
Shower Curtain	6	Bobrick	204-3 Shower Curtain 70"W x 72"H	Opaque Matte White Vinyl	
Shower Curtain (Family Rooms)	2	Bobrick	204-2 Shower Curtain 42"W x 72"H	Opaque Matte White Vinyl	
Shower Curtain Hooks	86	Bobrick	204-1 Shower Curtain Hook	Stainless Steel	
Folding Shower Seat	4	Bobrick	B-5193 Folding Shower/Dressing Area Seat	Ivory-Colored Phenolic	
Grab Bars	10	Bobrick	B-6806 Series Straight Grab Bar, 36"	Satin Finish	
Grab Bars	6	Bobrick	B-6806 Series Straight Grab Bar, 42"	Satin Finish	

1

TEXAS PARKS & WILDLIFE

RICHTER ARCHITECTS

LAKE CORPUS CHRISTI STATE PARK
RESTROOM REPLACEMENT
PROJECT NUMBER 1210196A

ISSUE DATE: 12.22.2020

1 ADDENDUM 4 03.11.2021

REVISED:

REVISED:

PHASE: BIDDING

SHEET TITLE
SCHEDULES

SHEET NUMBER
A601

REGISTERED ARCHITECT MAYA LING RICHTER 20168 STATE OF TEXAS
12-04-20

C:\Users\mrich\OneDrive\Documents\#2003.00 - TPWD Lake CC Restroom Replacement 201204_100%CD_mrichterHW9UUJ.rvt

S T R U C T U R A L N O T E S

COORDINATION

A. The contractor shall compare the architectural, structural, mechanical, electrical, plumbing, and other series drawings and report any discrepancies between each set of drawings and within each set of drawings prior to fabrication and installation of any structural members.

B. Only larger sleeve openings and framed openings in structural framing component members are indicated on the structural drawings. However, all sleeves, inserts and openings, including frames and/or sleeves shall be provided for passage, provision and/or incorporation of the work of the contract, including but not limited to mechanical, electrical and plumbing work. This work shall include the coordination of sizes, alignment, dimensions, position, locations, elevations and grades as required to serve the intended purpose. Openings not indicated on the structural drawings, but required as noted above, shall be submitted to the engineer for review.

C. Refer to architectural, mechanical, electrical and plumbing drawings for floor elevations, slopes, drains and location of depressed and elevated floor areas.

D. Compatibility of the structure and provisions for building equipment supported on or from structural components shall be verified as to size, dimensions, clearances, accessibility, weights and reaction with the equipment for which the structure has been designed prior to submission of shop drawings and data for each piece of equipment and for structural components. Differences shall be noted on the submittals.

E. Shop drawings shall be prepared for all structural items and submitted for review by the engineer. Structural drawings shall not be reproduced and used as shop drawings. All items deviating from the structural drawings or from previously submitted shop drawings shall be clouded.

F. The details designated as "typical details" apply generally to the structural drawings in all areas where conditions are similar to those described in the details.

G. All structural elements of the project have been designed by the engineer to resist the required code vertical and lateral forces that could occur in the final completed structure only. It is the responsibility of the contractor to provide all required bracing during construction to maintain the stability and safety of all structural elements during the construction process until the lateral-load resisting or stability-providing system is completely installed and the structure is completely tied together. Temporary supports shall not result in the overstress or damage of the elements to be braced nor any elements used as brace supports.

H. The contract structural drawings and specifications represent the finished structure, and except where specifically shown, do not indicate the means or methods of construction. The contractor and their sub-contractors shall supervise and direct the work and shall be solely responsible for all construction means, methods, procedures, techniques, sequences and safety measures including, but not limited to, adherences to all osha guidelines. The engineer shall not have control of, and shall not be responsible for, construction means, methods, techniques, sequences or procedures, for safety precautions and programs in connection with the work, for the acts or omissions of the contractor, subcontractors, or any other person performing any of the work, or for the failure of any of these persons to carry out the work in accordance with the structural contract documents.

SUBSTITUTIONS

A. All requests for substitutions of materials or details shown in the Structural Contract Documents shall be submitted for approval during the bidding period.

B. Once bids are accepted, proposed substitutions will be considered only when they are officially submitted with an identified savings or duration to be deducted from the contract and/or schedule impact. Submittals not satisfying the above criteria will not be considered.

CODES & REFERENCED REPORTS 1

A. The General Building Code used as the basis for the structural design is as follows:
   1. International Building Code, 2018 Edition

B. Structural Concrete: Building Code Requirements for Reinforced Concrete, American Concrete Institute, ACI 318, as referenced by the General Building Code.

C. Concrete Masonry: Building Code Requirements for Concrete Masonry Structures, American Concrete Institute, ACI 530, as referenced by the General Building Code.

D. Structural Steel: Manual of Steel Construction, American Institute of Steel Construction Inc., ANSI/AISC 360, as referenced by the General Building Code.

E. Wood Framing: National Design Specifications for Wood Construction with Supplement, National Forest and Paper Products Association, as referenced by the General Building Code.

F. Structural Plywood: Plywood Design Specification, American Plywood Association, as referenced by the General Building Code.

G. Geotechnical Report: Foundation elements have been designed in accordance with information provided in the following geotechnical report:

Geotechnical engineer:	Rock Engineering & Testing Laboratory, Inc.
Report Number:	G120370
Date:	07.29.20

DESIGN LOADS 1

A. Dead Loads include the self-weight of the structural elements and the following superimposed loads:

1.	Ceiling and Mechanical at roof	10 psf
2.	Roofing and rigid insulation	15 psf

B. Live Loads

	OCCUPANCY OR USE	UNIFORM (psf)	CONCENTRATED (lbs.)
1.	Ground Floor	100	N/A
2.	Roof - Unreduced (see Note 1)	20	N/A

Notes:
1. The roof structure has additionally been designed to support the weight of ponded water in accordance with AISC.
   a. Notify Architect if the final roof slope is less than 1/4"per foot. Elevation difference between primary and overflow drains or scuppers shall not exceed 2".

C. Snow loads
1. Ground snow load, Pg — 0 psf

D. Wind loads
1. Wind lateral load on structural frame is based on ASCE 7-10 using the following:
   a. Basic Wind Speed (Ultimate) — 131
   b. Exposure — C
   c. Internal Pressure Coefficient, Gcpi — +/-0.55
   d. Risk Category — II
2. Components and cladding wind pressures:

Surface	(PSF)	Zone	Area At (ft2)
Exterior walls	55.8 / -59.2	Interior	10 or less
	55.8 / -69.6	Edge	10 or less
	45.4 / -48.8	Interior	500 or greater
	45.4 / -48.8	Edge	500 or greater
Roof	See 1/ S104 & 2/S104		

- Pressures for Tributary Areas in between the listed values may be linearly interpolated.
- Negative value signifies pressure acting away from the surface (suction).
- Edge and Corner zone distances shall be determined in accordance with referenced standard.

E. Seismic Loads
1. The structure and structural components of the building have been designed in accordance with General Building Code with the following criteria:
   a. Seismic Importance Factor, IE — 1.0
   b. Risk Category — II
   c. Mapped Spectral Response Accelerations
      i. Ss (%g) — 0.075
      ii. S1 (%g) — 0.023
   d. Site Class — D
   e. Spectral Response Coefficients
      i. SDS — 0.08
      ii. SD1 — 0.036
   f. Seismic Design Category — A
   g. Basic Seismic-force-resisting system — Bearing Wall System; Ordinary Reinforced Masonry Shear Walls
   h. Design Base shear, V — 15K
   i. Seismic Response Coefficient(s), Cs — 0.04
   j. Response Modification Factor(s), R — 2
   k. Analysis Procedure Used — Simplified

CONTROLLED BACKFILL BEHIND RETAINING WALLS

A. Backfill material shall have a plasticity index between 7 and 18, with a liquid limit less than 40 percent.

B. Fill shall be placed in lifts not to exceed 8".

C. Fill shall be compacted at the optimum moisture content (-1% to +3%) to 95 percent of the maximum dry density per ASTM D698.

D. Compaction and moisture content of controlled backfill shall be verified by an independent testing laboratory.

E. The top 1.5 ft of material below the ground surface shall consist of relatively impervious material, with a liquid limit between 40 and 50 percent and a plasticity index between 20 and 30. This material shall be placed in 6" lifts and compacted at optimum moisture content, to 95 percent of the maximum density per ASTM D698.

F. Backfill material shall not be placed against foundation walls until all supporting slabs, beams, struts, etc., have attained their 28 day design strength unless proper bracing is installed.

G. Where backfill is required on both sides of a structure or building element, backfill shall be placed simultaneously along both sides so that the backfill height on one side does not exceed the height on the opposite side by more than 4'-0".

H. Compaction and moisture content of subgrade and each lift of structural fill shall be inspected and approved by a qualified engineering technician, supervised by a Geotechnical Engineer.

I. Design of building retaining walls is based on equivalent hydrostatic pressures of 60 pcf, assuming free draining backfill (or select fill or on-site clays) and use of perforated drain pipe.

J. The above recommendations have been prepared in accordance with the referenced geotechnical report.

BUILDING PAD PREPARATION

A. Structural fill material shall be homogeneous, free from organics and other deleterious materials and should have a maximum liquid limit of 40 percent and a plasticity index (PI) between 7 and 18. Select fill soils shall have a minimum of 35 percent passing the #200 sieve and no soil particles exceeding 1 1/2 inches.

B. Prior to placing fill material, initial rough site grading should be performed to lower the site elevation by cutting to acheive a uniform subgrade elevation in the building area. After rough grading, remove all organic and other deleterious material from the existing subgrade for a distance of 5'-0" beyond building line, to a depth of 6 inches. Remove additional material as required to place a minimum of 1.5 feet of structural fill beneath the building slab. Once excavation operations in the building area have been performed, the upper 1 foot of exposed subgrade soils shall be moisture conditioned and recompacted to a minimum of 95 percent of the maximum dry density as defined by ASTM D 698 (Standard Proctor Test) with a moisture content at, or above, the optimum moisture content. If any soft areas are identified, the soils should be removed and recompacted in place.

C. Structural fill shall be placed in 8 inch loose lifts to final subgrade elevation, watered as required and compacted to a minimum of 95 percent of the maximum dry density as defined in ASTM D 698 with a moisture content at, or above, the optimum moisture content.

D. Compaction and moisture content of subgrade and each lift of structural fill shall be inspected and approved by a qualified engineering technician, supervised by a Geotechnical Engineer. A minimum of one in-place density test shall be performed on the subgrade soils and each subsequent lift of fill for each 3,000 square feet, or a minimum of three in-place density tests per testing interval, whichever is greater. Any areas not meeting the required compaction should be recompacted and restested until compliance is met.

E. Structural fill shall not be placed beyond the limits of the exterior building structure.

F. Provide a vapor retarder that conforms to ASTM E1745, Class A or better with a maximum water vapor permeance of 0.03 perms per ASTM E96. Vapor retarder shall be no less than 15 mils thick.

G. The above recommendations have been prepared in accordance with the referenced geotechnical report.

CONCRETE FOOTINGS

A. Concrete footing design is based on an allowable net bearing capacity of 1,400 psf in accordance with the referenced geotechnical report.

B. Bearing stratum shown on the footing details is natural in-situ soils or properly compacted structural fill.

C. Footings not specifically located on the plan shall be located on centerline of pilaster or column above. Where no pilaster or column occurs, locate on centerline of wall or beam.

D. Provide dowels from footings into concrete above using same bar size and number as shown for pilaster or column above. Where no pilaster or column occurs, use 4 #7 dowels. Extend dowels 30 bar diameters into pier and wall, beam, pilaster or column, unless noted otherwise on the Structural Drawings.

E. Elevation of top of plinths/footings, unless noted otherwise on the Structural Drawings, is at the bottom of the deepest intersecting beam or wall supported by the footing.

F. Footing excavations shall be to neat lines and shall be free of loose or wet materials.

G. Reinforcing steel shop drawings shall include placing drawings for templates to set dowels in footings.

H. All footings shall be inspected by a representative of Rock Engineering & Testing Laboratory, Inc. in order to ensure that the proposed bearing material has been reached in accordance with the recommendations given in the referenced geotechnical report and that the footing has been constructed to specified size, with detailed reinforcing, and to specified tolerances.

CAST-IN-PLACE CONCRETE

A. CONCRETE MIX USAGE SCHEDULE:
All concrete shall conform to the requirements as specified in the table below, unless noted otherwise on the Structural Drawings:

Use	Strength psi	Agg. Type	Agg. Size	Slump Inches	Max w/c	Air Content
Footings	3000	NWT	1"	3-5	----	-----
Slab-on-Grade	4000	NWT	1"	3-5	----	-----
Retaining Walls	4500	NWT	1"	3-5	----	-----

1. "NWT" refers to normal concrete having air dry unit weight of approximately 145 PCF (ASCE C33 aggregate)
2. Where the w/c ratio is not indicated in the table above, it shall be as necessary to meet strength requirements.
3. Where the w/c ratio is shown, it shall be adhered to regardless of strength requirements.
4. "Strength" is required compressive cylinder strength at an age of 28 days.

B. A maximum of 20% of the cementitious materials used in mix designs may be replaced with class C or F fly ash.

C. Fly ash shall not be used in architecturally exposed concrete.

D. Horizontal construction joints in concrete placements shall be permitted only where indicated on the Structural Drawings. All vertical construction joints shall be made in the center of spans in accordance with the typical details. Contractor shall submit proposed locations for construction joints not shown on the Structural Drawings for review by the Architect and Engineer. Additional construction joints may require additional reinforcing as specified by the Engineer which shall be provided by the contractor at no additional cost to the owner.

CAST-IN-PLACE CONCRETE (CONT.)

E. Embedded conduits, pipes, and sleeves shall meet the requirements of ACI 318, Section 26.8, including the following:
   1. Conduits and pipes embedded within a slab, wall, or beam (other than those passing through) shall not be larger in outside dimension than 1/3 the overall thickness of the slab, wall or beam in which they are embedded.
   2. Conduits, pipes and sleeves shall not be spaced closer than three diameters or widths on center.

F. Grade beams in contact with earth shall be formed both sides unless noted otherwise in details.

G. Concrete sampling for quality assurance: Concrete that is pumped shall be sampled at the point of discharge from the truck for information, including slump; and shall be sampled at the point of placement for acceptance of slump and air content.

CONCRETE REINFORCING

A. Concrete reinforcement for the project shall conform to the following:
   1. All reinforcing steel shall be new billet steel in accordance ASTM A615, Grade 60, unless noted otherwise in the Structural Drawings or these notes.
   2. Deformed Bar Anchors. ASTM A1064 minimum yield strength 70,000 psi as noted on the Structural Drawings. Reinforcing bars shall not be substituted for deformed bar anchors.

B. Detailing of reinforcing steel shall conform to the American Concrete Institute 315 Detailing Manual and all hooks and bends in reinforcing bars shall conform to ACI detailing standards, unless noted otherwise on the Structural Drawings.

C. In unscheduled grade beams, walls, and slabs, detail reinforcing as follows:
   1. Class A lap beam top reinforcing bars at mid span.
   2. Class A lap beam bottom reinforcing bars at the supports.
   3. Provide Class B lap at other location pending Engineer's approval.
   4. Provide standard hooks in top bars at cantilever and discontinuous ends of beams, walls and slabs.
   5. Provide corner bars for all horizontal bars at the inside and outside faces of intersecting beams or walls. Corner bars are not required if horizontal bars are hooked.
   6. Provide 2-#4 diagonal bars at all slab re-entrant corners placed under the top mat of steel.

D. Welding of reinforcing steel will not be permitted unless specifically shown on the Structural Drawings.

E. Heat shall not be used in the fabrication or installation of reinforcement.

F. Reinforcing steel clear cover shall be as follows:
   1. Footings — 3"
   2. Slab-on-grade — 1 1/2" top
   3. Housekeeping Pads — 1" Int., 2" ext. exposure
      a. "Exterior Exposure" refers to concrete exposed to earth or weather.

STRUCTURAL MASONRY

A. Minimum compressive strength of the masonry (f'm) shall be as noted below.

B. Mortar shall conform to ASTM C270, Type S. Masonry cement shall not be used.

C. Concrete masonry units shall be hollow load bearing units which conform to ASTM C90, with a minimum net compressive strength as follows:

f'm (psi)	Net area Compressive Strength of CMU Block (psi)
2000	2000

D. Coarse grout shall conform to ASTM C476, with a maximum aggregate size of 1/2" and a minimum compressive strength equal to the specified minimum compressive strength, f'm, but not less than 2000 psi. Course grout shall be placed in accordance with ACI 530.01 Section 3.5.

E. Reinforce concrete masonry unit joints with ladder type hot dip galvanized cold-drawn steel conforming to ANSI/ASTM A82, with [W1.7 or W2.8]side rods with W1.7 cross rods.
   1. Space joint reinforcing at 16 inches o.c. unless noted otherwise.
   2. Lap joint reinforcing 14 inches at splices.
   3. Provide prefabricated joint reinforcing corner pieces at all wall corners and intersections.
   4. Joint reinforcing shall be discontinuous at control and expansion joints.

F. Lap reinforcing bars in grouted masonry as noted below. Splices in reinforcing shall be staggered so that not more than 1/2 of all bars are spliced at the same location.
   1. Vertical bars:

#4, #5 rebar	60 bar diameters
#6 rebar	70 bar diameters
#7 or larger rebar	Mechanical splices only

   2. Bond beams: — 40 bar diameters
   3. Lintels: — Do not splice

G. Embedded conduits, pipes, and sleeves shall meet the requirements of ACI 530, Section 3.2.2, including the following:
   1. Conduits, pipes, and sleeves in masonry shall be no closer than 3 diameters on center. Minimum spacing of conduits, pipes or sleeves of different diameters shall be determined using the larger diameter.
   2. Vertical conduits, pipes, or sleeves placed in masonry jambs, columns or pilasters shall not displace more than 2 percent of the net cross-sectional area.
      a. The net cross-sectional area is the area of masonry units, grout, and mortar. Ungrouted cells are not considered part of the net cross-sectional area.

POST-INSTALLED ANCHORS AND DOWELS

A. Screw Anchors:
   1. In Concrete: Screw Anchors shall have been tested and qualified in accordance with ACI 355.2 and ICC-ES AC 193. Qualifying anchors shall be one of the following:
      a. Kwik HUS-EZ (ICC-ES ESR-3027), Hilti Inc.
      b. Titen HD (ICC-ES ESR-2713), Simpson Strong-Tie Co., Inc.
   2. In Grouted Masonry: (Installation permitted in both the top and face of wall) Screw Anchors shall have been tested and qualified in accordance with ICC-ES AC 106. Qualifying anchors shall be one of the following products:
      a. Kwik HUS-EZ and HUS-EZ P (ICC-ESR-3056), Hilti Inc.
      b. Titen HD (ICC-ES ESR-1056), Simpson Strong-Tie Co., Inc.

B. Adhesive Anchors with Threaded Rod:
   1. In Concrete: Adhesive Anchors shall have been tested and qualified in accordance with ACI 355.4 and ICC-ES AC 308. Qualifying anchors shall be one of the following products, unless specifically noted otherwise on structural drawings:
      a. Epoxy: HIT-RE 500V3 SAFE SET (ICC-ES ESR-3814), Hilti Inc.
      b. Epoxy: SET-3G (ICC-ES ESR-4057), Simpson Strong-Tie Co., Inc.
      c. Acrylic: HIT-HY 200 SAFE SET (ICC-ES ESR-3187), Hilti Inc.
      d. Acrylic: AT-XP (IAPMO-ER-0263), Simpson Strong-Tie Co., Inc.
   2. In Grouted Concrete Masonry: (Installation permitted in both the top and face of wall) Adhesive Anchors shall have been tested and qualified in accordance with ICC-ES AC 58. Qualifying anchors shall be one of the following:
      a. Acrylic: HIT HY-270 (ICC-ES ESR-4143), Hilti, Inc.
      b. Epoxy: SET-XP (IAPMO-ES ER-265), Simpson Strong-Tie Co., Inc.
      c. Acrylic: AT-XP (IAPMO-ES ER-0281), Simpson Strong-Tie Co., Inc.
   3. In Ungrouted Concrete Masonry:
      a. Acrylic: HIT HY-270 (ICC-ES ESR-4143), Hilti, Inc.
      b. Epoxy: SET-XP (IAPMO-ES ER-265), Simpson Strong-Tie Co., Inc.
   4. Threaded anchor rod shall be one of the following:
      a. Hilti adhesive: HAS-E-55 ASTM F1554 Threaded Rods
      b. Simpson adhesive: Steel meeting the requirements of ASTM F1554, grade 36.
      c. Anchor rod shall have a chamfered end on one end to accept a nut and washer; it may have a 45-degree chisel point on the other end.
      d. Nuts and washers shall have a proof load strength at least as strong as anchor rod. Stainless steel nuts and washers shall be provided with stainless steel rods.

C. Adhesive Rebar Dowelling
   1. Adhesive dowels are not permitted to be substituted for cast-in dowels unless authorized in advance by JQ for each specific location.
   2. Adhesive doweling systems in concrete shall have been tested and qualified in accordance with ACI 355.4 and ICC-ES AC 308. Qualifying anchors shall be one of the following products, unless specifically noted otherwise on structural drawings:
      a. Epoxy: HIT-RE 500V3 SAFE SET (ICC-ES ESR-3814), Hilti Inc.
      b. Epoxy: SET-3G (ICC-ES ESR-4057), Simpson Strong-Tie Co., Inc.
      c. Acrylic: HIT-HY 200 SAFE SET (ICC-ES ESR-3187), Hilti, Inc.

D. Anchor and Dowel Installation
   1. Anchors and dowels of the size and embedment shown on the Drawings shall be installed in accordance with the Contract Documents, the manufacturer's recommendations, and the manufacturer's current evaluation (ICC-ES or IAPMO-ES) report for the anchor. If conflicts exist between these referenced documents, the most stringent requirements shall govern.
   2. The Contractor shall locate all existing reinforcing steel and other embedded items contained in the concrete using non-destructive methods and shall position anchor locations to avoid conflicts with existing embedded items. Anchor or dowel locations can be adjusted by a maximum of 1 1/2" from detailed locations to avoid conflicts, but shall neither change arrangement nor move closer to a concrete edge.
   3. Based on field verified locations of reinforcing steel and embedded items, the Contractor shall create templates for each anchor group. Submit template dimensions for review prior to fabrication of connection plates.
   4. Holes for anchors and dowels shall be drilled in a continuous operation using the drill-bit type and size recommended by the anchor manufacturer. Holes shall be drilled perpendicular to the concrete surface and shall not be enlarged or redirected at any point along its length. Holes shall be drilled using a hammer drill, coring shall not be allowed, unless noted otherwise.
   5. Oil free compressed air shall be used to blow out the holes; shop vacs, squeeze bulbs, etc. shall NOT be used. Refer to manufacturer's information for detailed cleaning instructions.
      a. Hilti Safe-Set system may be used to eliminate hole cleaning with adhesive anchors.
      b. Simpson Speed Clean DXS system may be used to eliminate hole cleaning with adhesive anchors.
   6. All abandoned holes shall be filled with non-metallic nonshrink grout capable of reaching a design compressive strength of 5,000 psi at 28 days.
   7. Holes in connection plates shall be no more than 1/16" larger than the anchor diameter. If larger holes are required for erection purposes, Contractor shall notify Engineer such that a plate washer size can be provided.
   8. Concrete shall have a compressive strength of 2500 psi minimum at an age of 21 days.
   9. Adhesive anchors and dowels: Concrete and masonry substrates shall have the following minimum and maximum temperatures at the time of adhesive anchor and dowel installation:

	Minimum (°F)	Maximum (°F)
Hilti HIT RE-500V3 SAFE SET	23	104
Simpson SET-3G	40	100
Hilti HY-270	41 (23 in CMU)	104
Hilti HY-200 SAFE SET	14	104
Simpson AT-XP	14	100

E. The following parameters were used in the determination of the adhesive bond stress for adhesive anchors:
   1. Concrete temperature range:
      a. Epoxy: HIT-RE 500V3 SAFE SET (ICC-ES ESR-3814): Temperature range "A" (Max short term temp = 130degF, max long term temp = 110degF)
      b. Epoxy: SET-3G (ICC-ES ESR-4057): Temperature Range 1 (Max. Short term temp. = 160degF, max. long term temp. = 110degF)
      c. Epoxy: SET (ICC-ES ESR-1772): Max. base material temp. = 110deg F
      d. Acrylic: HIT-HY200 SAFE SET (ICC-ES ESR-3187): Temperature range "A" (Max short term temp = 130deg F, max long term temp = 110deg F)
      e. Acrylic: AT-XP (IAPMO-ES ER-263): Temperature Range 1 (Max. Short term temp. = 180degF, max. long term temp. = 110degF)
   2. Drilled hole condition: Dry

F. For adhesive anchors installed in a horizontal orientation subject to sustained tension loading and all upwardly inclined (including soffit installations) orientation:
   1. Per ACI 318-14 (17.8.2.2): Installation shall be performed by personnel certified by ACI/CRSI "Adhesive Anchor Installer Certification Program." Certification shall include written and performance tests.

shaping the built environment
JQ infrastructure
JQ INFRASTRUCTURE, LLC
330 GLASS STREET, SUITE 201
972.392.7340
DALLAS, TEXAS 75207
JQENG.COM
PROJECT NO: 4200119
TBPE FIRM F-7986
12/4/2020
STATE OF TEXAS
BRIAN J. ROBERTSON
108844
LICENSED
PROFESSIONAL ENGINEER

TEXAS PARKS & WILDLIFE

RICHTER ARCHITECTS

LAKE CORPUS CHRISTI STATE PARK
RESTROOM REPLACEMENT
PROJECT NUMBER 1210196A

DATE: 12-4-2020
DESIGNED BY: JQ
DRAWN BY: JQ
REVIEWED BY: JQ
REVISED: 3-9-2021
1 - Addendum #4
REVISED:
REVISED:
PHASE: 100% CD

SHEET TITLE
STRUCTURAL NOTES

SHEET NUMBER
S101

C:\Users\brobertson\Documents\4200119-Struct-19_brianGVWLS.rvt

S T R U C T U R A L   N O T E S

STRUCTURAL STEEL

A. Material
1. All hot rolled steel members shall be new and conform to ASTM specification A6.
2. ASTM Specification and Grade - clearly mark the grade on each member.
3. Unless Noted otherwise on the Structural Drawings, structural steel members shall be:
   a. W-shapes shall conform to ASTM A992.
   b. Channels shall conform to ASTM A36.
   c. Angles shall conform to ASTM A36.
   d. Square or rectangular hollow structural shape members shall conform to ASTM A500 Grade B, Fy = 46 ksi.
   e. Structural steel plate shall conform to ASTM A36.
   f. Any other steel shall conform to ASTM A36.
   g. Headed stud shear connectors shall conform to ASTM A108.

B. Fabrication
1. Splicing of structural steel members is prohibited without prior approval of the Engineer as to location and type of splice to be made. Any member having splice not shown and detailed on shop drawings will be rejected.
2. Dimensional tolerances of fabricated structural steel shall conform to Section 6.4 of the AISC Code of Standard Practice unless noted otherwise on the Structural Drawings.
3. Shop painting: Paint structural steel with one coat of manufacturer's standard red oxide primer applied at a rate to provide a uniform dry film thickness of 2.5 mils.

C. Erection
1. Erection tolerances of anchor bolts, embedded items, and all structural steel unless specified otherwise on the Structural Drawings shall conform to the AISC Code of Standard Practice.
2. Field cutting of structural steel or any field modifications to structural steel shall not be made without prior approval of the Engineer.
3. Contractor shall protect any unprimed structural steel from detrimental effects of corrosion, as required, until the steel is enclosed and protected by the new construction.
4. Hot dip galvanize after fabrication all structural steel items and connections permanently exposed to the weather, whether specified on the Structural Drawings or not. Such items include, but are not limited to:
   a. Shelf angles
   b. Parapet wall supporting members
   c. All embedded plates in concrete
   d. Building cladding support steel in space not air conditioned and/or exposed to moisture outside the exterior waterproofing surface if any.
   e. Railing exposed to weather.
   f. Examine the Architectural and Structural Drawings for other items required to be hot dipped galvanized. Galvanize all nuts, bolts, and washers used in connection with such steel. Field welded connections shall have welds protected with "Z.R.C. Cold Galvanizing Compound" as manufactured by Z.R.C. Company.

D. Contractor shall coordinate structural steel fireproofing requirements. All interior structural steel, including steel joists, scheduled or indicated to receive spray applied fireproofing shall be delivered to the project site unprimed. Steel exposed to corrosive conditions after installation shall be primed with a protective coating which does not diminish the bond between the spray applied fireproofing, and the steel substrate. Any primer, and/or coating applied to structural steel shall be approved for use in the applicable U.L. Fire Resistance Assembly used on the project.

STRUCTURAL STEEL CONNECTIONS

A. Welded Connections
1. All welding shall conform to ANSI/AWS D1.1, latest edition.
2. Fillet welds with no size specified shall be 3/16 inch or minimum size required by AISC, whichever is larger.

B. Bolted Connections
1. Unless noted otherwise on the Structural Drawings, bolts shall be 3/4 inch diameter and conform to ASTM F3125, grade A325. Bolts shall be designed using values for bearing type bolts with thread allowed in the shear plane.
2. Bolts shall be tightened to "snug tight" as defined by AISC, unless noted otherwise on the Structural Drawings.
3. Refer to "Structural Steel Slip-Critical Bolted Connections" structural notes at slip-critical bolted connections.

C. Structural steel connections not specifically detailed on the Structural Drawings shall be designed and detailed by the Contractor under the direct supervision of a professional engineer licensed in the state having jurisdiction at the project site. Sealed calculations for all connections designed by the Contractor shall be submitted for the Architect's files.

D. Beam connections shall be designed and detailed as follows, unless noted otherwise on the Structural Drawings:
1. Connections shall be AISC type 2 simple framing connections. Shear tab connections shall not be used unless specifically detailed on the Structural Drawings, or connections are designed and detailed by the fabricator's registered professional engineer licensed in the State of TX and sealed calculations are submitted.
2. In general, shop connections shall be bolted or welded and field connections shall be bolted.
3. Where indicated, connections shall be designed for the scheduled shear force. The shear force is indicated on the Structural Drawings as "R = ", and the horizontal force indicated as "H = ".
4. If not indicated on the Structural Drawings, connections shall be designed for 55 percent of the total load capacity for the beam span shown in the beam tables in the AISC Manual referenced in the "Codes & Referenced Reports" notes.
5. Short slotted holes shall be permitted provided washers are installed in accordance with AISC requirements. Washers shall be hardened where A325 bolts are utilized.

E. Moment Connections
1. Where indicated, moment connections shall be designed for the scheduled moment envelope. The moment is indicated on the Structural Drawings as "(M =)".
2. If not indicated on the Structural Drawings, moment connections shall be welded to develop the full capacity of the member.
3. All welds denoted as moment connection or complete joint penetration (CJP) weld shall be ultrasonically or x-ray certified by an independent testing agency.

F. All beam shears, reactions, member forces, moments, etc. shown on the Structural Drawings are unfactored loads conforming to the requirements of AISC Allowable Stress Design (ASD).

STRUCTURAL STEEL CONNECTIONS (CONT.)

G. Base Plates
1. Column base plates shall be set to the elevation indicated on the Structural Drawings and leveled using shims or by double nuts on anchor bolts. Base plates shall then be grouted with a non-shrink, high strength nonmetallic grout. Tighten anchor bolts after supported members have been positioned and plumbed.
2. Hole sizes in base plates shall be oversized with plate washers per AISC SECTION J3.2.

H. Anchor rods shall be:
1. Typical: ASTM F1554 Gr. 36, Weldable.

I. For connections not specifically addressed by these notes or the Structural Drawings, provide fillet welds at all contact surfaces sufficient to develop the tensile strength of the smaller member at the joint.

TIMBER FRAMING

A. Unless noted otherwise on the Structural Drawings, all structural framing lumber shall be clearly marked No. 2 Southern yellow pine or Douglas fir.

B. Wood Preservative Treated Lumber (Pressure Treated):
1. Preservative Treated Lumber shall be Southern Yellow Pine and shall be treated as described below.
2. Preservative Treatment by Pressure Process should be performed according to the AWPA methods described below. The preservative chemicals shall be waterborne and can include Alkaline Copper Quat (ACQ-C, ACQ-D) and Copper Azole (CBA-C & CA-B) for interior or exterior uses and Inorganic Boron (SBX) for interior use only. Preservative shall not contain arsenic or chromium and shall not contain ammonia carriers.
3. Wood Installed for above ground use shall be preservative treated using water-borne preservatives in accordance with AWPA U2, use category UC3B. The locations to be treated are as follows:
   a. Wood joists or wood floor without joists are closer than 18 inches or wood girders are closer than 12 inches to the exposed ground in crawl space.
   b. Wood Framing members including wood sheathing which rest on exterior foundation walls and are less than 8inches from the exposed earth.
   c. Wood framing members or furring strips attached directly to the interior of exterior or concrete walls below grade.
   d. Wood sleepers and sill plates on concrete or masonry slab that is in direct contact with earth.
   e. Wood Girder ends supported by exterior masonry or concrete walls unless 1/2 inch airspace is provided on top, sides, and end.
   f. Wood Siding closer than 6 inches to earth.
   h. Portions of Glued-laminated timbers exposed to weather.
   i. All Lumber in direct contact with concrete or CMU. (1)
4. Wood in contact with Ground (exposed earth) or fresh water shall be preservative treated using water-borne preservatives in accordance with AWPA U1, with use category UC4C.
5. Wood member that form supports of buildings, balconies, porches, or similar permanent building appurtenances where such members are exposed to the weather without adequate protection from the roof, eave, overhang, etc. to prevent water accumulation on the surface or between joints shall be preservative treated using water-borne preservatives in accordance with AWPA U1 with use category UC3A.
6. Other wood members noted in the drawings shall be preservative treated using water-borne preservatives in accordance with AWPA U1 with use category UC3A.

C. All wood headers, beams, and top plates shall be no. 2 Southern Yellow Pine or Douglas Fir.

D. Roof sheathing: 1/2" APA rated sheathing with an exposure 1 rating (or) 1/2" grade C-D plywood with exterior glue. Panels shall be continuous over two or more spans with the long dimension oriented perpendicular to the framing members. Nail with 8d common nails at 6" on center at supported edges and 12" on center at intermediate supports. Stagger joints in sheathing.

E. Solid 2x blocking or bandboard shall be provided at supports and cantilever ends of all wood joists, and between supports in rows not exceeding 8'-0" apart.

F. All framing members framing into the side of a header shall be attached using metal joist hangers of type "LU" as manufactured by the Simpson Company or equal. The hanger shall be sized and installed in accordance with the manufacturer's recommendations for the size of joist supported.

G. Nailing and attachment of all framing members and sheathing shall be as specified in the International Building Code Nailing Schedule unless noted otherwise on the Structural Drawings. Common wire nails or spikes, or galvanized box nails shall be used for all framing unless noted otherwise on the Structural Drawings.

H. All Connectors and Fasteners shall be Stainless Steel. (1)

I. As an alternate, plates may be attached to concrete foundation elements with power actuated fasteners. Provide washers at least 0.08 inches thick, and 1.1 inches square or 1.425 inches in diameter at each fastener. Fasteners shall be 3" long and shall have a minimum shank diameter of 0.145 inches. Provide two fasteners located 6 and 10 inches from the end of each sill plate piece, and then at a maximum spacing of 18 inches on center maximum at exterior walls and at interior party walls. At interior non-load bearing partitions, fasteners may be spaced at 36" on center, maximum. Fasteners shall be Hilti X-CR 72P8 pins or equal. Submit manufacturer's information on fastener to be used prior to start of construction.

J. All bolts and lag screws shall have standard washers. All anchor and expansion bolts used in wood to concrete connections in crawlspace areas shall be hot dip galvanized or stainless steel.

K. Refer to the Architectural Drawings for additional wood framing members. Provide additional wood framing members shown on the Architectural Drawings even though they may not be shown on the Structural Drawings.

DESIGN BY OTHERS

A. In accordance with the Specifications the items listed below are not included in the Contract Documents. Design of these elements shall be the responsibility of the Contractor, and shall be designed and sealed by a registered professional engineer licensed in the state having jurisdiction at the project site.
1. Steel Connections
2. Guardrail and Handrail Systems

B. Design of the items listed above shall be in accordance with the General Building Code, and shall include all attachments to the structure.

TEXAS DEPARTMENT OF INSURANCE (1)

A. Conformance with the Texas Department of Insurance (TDI) Windstorm Inspection Program is required on this project. Product data for the required items shall meet the requirements of IBC 2018

B. The following submittals, product evaluation reports, and installation shall be reviewed and approved by the TDI Windstorm Inspector prior to purchase:
1. Exterior wall coverings
2. Exterior doors
3. Exterior windows
4. Roofing
5. Mechanical louvers
6. Rooftop hatches, fans, and vents
7. Storm shutters
8. Skylights
9. Curtainwall
10. Storefront
11. Translucent panels
12. Pre-engineered structures (sealed calculations required)

C. TDI Windstorm Inspector shall be notified to inspect the installation of all of the items listed in Part B and any additional items listed in the specifications that are required to meet TDI Windstorm Certification.

ABV.	ABOVE
A.F.F.	ABOVE FINISHED FLOOR
ADDN'L.	ADDITIONAL
ADH.	ADHESIVE
ADJ.	ADJACENT
AGGR.	AGGREGATE
A/C	AIR CONDITIONER
AHU	AIR HANDLING UNIT
ALT.	ALTERNATE
A.C.I.	AMERICAN CONCRETE INSTITUTE
A.I.S.C.	AMERICAN INSTITUE OF STEEL CONSTRUCTION
A.B.	ANCHOR BOLT
&	AND
L	ANGLE
APPD.	APPROVED
APPROX.	APPROXIMATE
ARCH.	ARCHITECT
ARCH'L	ARCHITECTURAL
A.E.C.	ARCHITECTURALLY EXPOSED CONCRETE
A.E.S.S.	ARCHITECTURALLY EXPOSED STRUCTURAL STEEL
@	AT
B.F.	BACK FACE
B. TO B.	BACK TO BACK
BSMT.	BASEMENT
BM.	BEAM
BRG.	BEARING
B.F.F.	BELOW FINISH FLOOR
BTWN.	BETWEEN
BEV('D)	BEVEL(ED)
BLK.	BLOCK
B.L.	BLOCK LINTEL
BLKG.	BLOCKING
BOT.	BOTTOM
B.O.	BOTTOM OF
B.O.S.	BOTTOM OF STEEL
BRKT.	BRACKET
BR.L.	BRICKLEDGE
BRDG.	BRIDGING
BLDG.	BUILDING
C	CAMBER
C.I.P.	CAST-IN-PLACE
CLG.	CELING
C.L.	CENTER LINE
C.G.	CENTER OF GRAVITY
C.G.S.	CENTER OF GRAVITY OR STRAND
CLR.	CLEAR OR CLEARANCE
CFS	COLD FORMED STEEL
COL.	COLUMN
C OR COMP.	COMPRESSION
CONC.	CONCRETE
CMU	CONCRETE MASONRY UNIT
CONN(S)	CONNECTION(S)
CONST.	CONSTRUCTION
CONST. JT.	CONSTRUCTION JOINT
CONT.	CONTINUOUS
CONTR.	CONTRACTOR
C.J.	CONTROL JOINT
COORD.	COORDINATE
COV. PL.	COVER PLATE
D.L.	DEAD LOAD
D.B.A.	DEFORMED BAR ANCHOR
DTL.	DETAIL
DIAG.	DIAGONAL
DIA OR Ø	DIAMETER
DIM(S).	DIMENSION(S)
DBL.	DOUBLE
XX-STR	DOUBLE EXTRA STRONG
DVTL.	DOVETAIL
DWL(S).	DOWEL(S)
DS.	DOWNSPOUT
DWG(S).	DRAWING(S)
EA.	EACH
E.F.	EACH FACE
E.W.	EACH WAY
ELEC.	ELECTRICAL
EL.	ELEVATION
ELEV.	ELEVATOR
EMBED.	EMBEDMENT
ENGR.	ENGINEER
EQ.	EQUAL
EQUIP.	EQUIPMENT
EF	EXHAUST FAN
EXIST.	EXISTING
EXP.	EXPANSION
E.J.	EXPANSION JOINT
EXT.	EXTERIOR
X-STR	EXTRA STRONG
FABR.	FABRICATOR
F. TO F.	FACE TO FACE
F.S.	FAR SIDE
F.V.	FIELD VERIFY
FIN('D)	FINISH(ED)
FIN. FL.	FINISHED FLOOR
FP.	FIREPROOF(ING)
FLG.	FLANGE
FL.	FLOOR
F.D.	FLOOR DRAIN
FT.	FOOT (OR) FEET
FDN.	FOUNDATION
FRMG	FRAMING
GA.	GAGE OR GAUGE
GALV.	GALVANIZED
G.C.	GENERAL CONTRACTOR
GR.	GRADE
GR. BM.	GRADE BEAM
H.S.A.	HEADED STUD ANCHOR
HT.	HEIGHT
H.P.	HIGH POINT
HSS	HOLLOW STRUCTURAL SECTION
HK.	HOOK
HORIZ.	HORIZONTAL
H.B.	HORIZONTAL BRACE
H.D.	HOT-DIP

IN.	INCH
INFO.	INFORMATION
I.D.	INSIDE DIAMETER
I.F.	INSIDE FACE
INT.	INTERIOR
INTERM.	INTERMEDIATE
JT.	JOINT
J.G.	JOIST GIRDER
JST(S)	JOIST(S)
KLF	KIP PER LINEAR FOOT
KSF	KIP PER SQUARE FOOT
KSI	KIP PER SQUARE INCH
K	KIPS (1000 LBS)
L.	LENGTH
L.W.	LIGHTWEIGHT
L.W.C.	LIGHTWEIGHT CONCRETE
L.L.	LIVE LOAD
LOC.	LOCATION
LLH	LONG LEG HORIZONTAL
LLV	LONG LEG VERTICAL
LSH	LONG SIDE HORIZONTAL
LSV	LONG SIDE VERTICAL
LSL	LONG SLOTTED HOLE
LONG	LONGITUDINAL
L.P.	LOW POINT
MFR.	MANUFACTURE(R)
MAS.	MASONRY
MAT.	MATERIAL
MAX.	MAXIMUM
MECH.	MECHANICAL
MEP	MECHANICAL, ELECTRICAL, PLUMBING
MTL.	METAL
MEZZ.	MEZZANINE
MID.	MIDDLE
MIN.	MINIMUM
MISC.	MISCELLANEOUS
M	MOMENT
M.C.	MOMENT CONNECTION(S)
N.F.	NEAR FACE
NOM.	NOMINAL
N.S.	NON-SHRINK
N.I.C.	NOT IN CONTRACT
N.T.S.	NOT TO SCALE
NO. OR #	NUMBER
O.C.	ON CENTER
OPNG(S)	OPENING(S)
OPP.	OPPOSITE
O.H.	OPPOSITE HAND
O.D.	OUTSIDE DIAMATER
O.F.	OUTSIDE FACE
OVS	OVER-SIZED HOLE
P	PAN
P.J.	PANEL JOINT
PAR.	PARALLEL
PERP.	PERPENDICULAR
PC.	PIECE
PL.	PLATE
PW.D.	PLYWOOD DECK
PT.	POINT
P-T	POST-TENSION(ED)
# OR LBS.	POUNDS
PCF	POUNDS PER CUBIC FOOT
PLF	POUNDS PER LINEAR FOOT
PSF	POUNDS PER SQUARE FOOT
PSI	POUNDS PER SQUARE INCH
P.E.M.B.	PRE-ENGINEERED METAL BUILDING
P/C	PRECAST CONCRETE
PREFAB.	PREFABRICATED
PRELIM.	PRELIMINARY
P.T.	PRESSURE TREATED
PROJ.	PROJECTION
QTY.	QUANTITY
R	RADIUS
REINF.	REINFORCE(ING)(ED)(MENT)
RCP	REINFORCED CONCRETE PIPE
REM.	REMAINDER
REQ.	REQUIRE
REQ'D.	REQUIRED
RET. SYS.	RETENTION SYSTEM
RIS.	RISER
RF.	ROOF
R.D.	ROOF DRAIN
R.T.U.	ROOF TOP UNIT
RM.	ROOM
R.O.	ROUGH OPENING
RND.	ROUND
SCHED.	SCHEDULE(D)
SECT.	SECTION
V	SHEAR
SHT.	SHEET
SSL	SHEET SHORT SLOTTED HOLE
SW	SIDEWALK
SIM.	SIMILAR
S.O.G.	SLAB ON GRADE
SPA.	SPACE
SPEC(S)	SPECIFICATION(S)
SPEC'D	SPECIFIED
SQ.	SQUARE
S.F.	SQUARE FOOT
STAGG.	STAGGERED
S.S.	STAINLESS STEEL
STD.	STANDARD
STL.	STEEL
S.J.I.	STEEL JOIST INSTITUE
STIFF	STIFFENER
STIRR.	STIRRUPS
STR.	STRAIGHT
STRUCT'L	STRUCTURAL
STRUCT.	STRUCTURE

SUBCONTR.	SUBCONTRACTOR
SUPT(S).	SUPPORT(S)
TEMP.	TEMPERATURE
T	TENSION
TERR.	TERRAZZO
THK.	THICK
THRD.	THREAD(ED)
T&G	TONGUE AND GROOVE
T&B	TOP AND BOTTOM
T.O.	TOP OF
T.O.B.	TOP OF BEAM
T.O.C.	TOP OF CONCRETE
T.O.F.	TOP OF FOOTING
T.O.J.	TOP OF JOIST
T.O.P.	TOP OF PIER
T.O.P.C.	TOP OF PIER (PIPE) CAP
T.O.PW.D	TOP OF PLYWOOD DECK
T.O.S.	TOP OF STEEL
T.O.W.	TOP OF WALL
TRANSV.	TRANSVERSE
TR.	TREAD
TYP.	TYPICAL
U.N.O.	UNLESS NOTED OTHERWISE
VERT.	VERTICAL
V.B.	VERTICAL BRACE
WPFG.	WATERPROOFING
WS.	WATERSTOP
WT.	WEIGHT
W.W.M.	WELDED WIRE MESH
W.	WIDTH
W.L.	WIND LOAD
WDW.	WINDOW
W/	WITH
W/O	WITHOUT
W.D.	WOOD
W.P.	WORK POINT

SYMBOLS LEGEND

SYMBOL	DESCRIPTION
FTG. TYPE, T.O.FTG. EL. / T.O. FTG. DETAIL	CONCRETE FOOTING
COLUMN SIZE / BASE PLATE TYPE	STEEL COLUMN
#	NEW COLUMN GRID
	SLAB OR DECK SPAN DIRECTION
	DROP IN SLAB OR DECK
	DROP AND SLOPE IN SLAB OR DECK
	SLOPE IN SLAB OR DECK
	MASONRY WALL
	WINDOW IN MASONRY WALL
	DOOR IN MASONRY WALL
	NONLOAD-BEARING WALL
SW-x	SHEARWALL, SEE SCHEDULE
	MISCELLANEOUS, SEE PLAN
	ROOF TOP UNIT (RTU)

TEXAS PARKS & WILDLIFE

RICHTER ARCHITECTS

LAKE CORPUS CHRISTI STATE PARK
RESTROOM REPLACEMENT
PROJECT NUMBER 1210196A

DATE: 12-4-2020
DESIGNED BY: JQ
DRAWN BY: JQ
REVIEWED BY: JQ
REVISED: 3-9-2021
1 - Addendum #4
REVISED:
REVISED:
PHASE: 100% CD

SHEET TITLE
STRUCTURAL NOTES

shaping the built environment
JQ Infrastructure
JQ INFRASTRUCTURE, LLC
100 GLASS STREET, SUITE 201
972.392.7340
DALLAS, TEXAS 75207
JQIENG.COM
PROJECT NO: 4200119
TBPE FIRM F-7986

12/4/2020
STATE OF TEXAS
BRIAN J. ROBERTSON
108844
LICENSED
PROFESSIONAL ENGINEER

SHEET NUMBER
S102

C:\Users\brobertson\Documents\4200119-Struct-19_brianGVMLS.rvt

SPECIAL INSPECTIONS

1. Special Inspections shall be performed in accordance with Chapter 17 of the 2018 International Building Code (IBC) by a Special Inspector hired by the Owner to perform the Special Inspections listed below. The Special Inspector shall be qualified by an approved agency according to the City's building official to perform the special inspections for which they will be undertaking. The Contractor shall coordinate with and notify the Special Inspector of all tests. The Special Inspector shall be responsible to verify that the items detailed in the Construction Documents were built accordingly and shall prepare, sign, and furnish inspection reports to the building official and the Architect for all time spent at the site. The Inspector shall bring discrepancies to the immediate attention of the General Contractor for correction. If the discrepancies are not corrected, the discrepancies shall be brought to the attention of the building official and to the Architect prior to the completion of that phase of the work. These special inspections are in addition to the other inspections listed in these Structural Notes or Project Specifications.

2. Where structural load-bearing members and assemblies are shop fabricated, the Special Inspector shall verify that the fabricator maintains detailed fabrication and quality control procedures that provide a basis for inspection control of the workmanship and the fabricator's ability to conform to the Construction Documents and Referenced Standards, unless the fabricator is registered and approved to perform such work without special inspection.

VERIFICATION AND INSPECTION TASKS FOR WELDING OF STRUCTURAL STEEL[1] (AISC 360-16 Table N5.4)

SPECIAL INSPECTION REQUIRED	VERIFICATION AND INSPECTION	INSPECTION FREQUENCY		REFERENCED STANDARD	IBC REFERENCE
		CONTINUOUS	PERIODIC		
	1. Inspection tasks prior to welding:				
YES	a. Welder qualification records and continuity records.	X	--		
YES	b. Welding procedure specifications (WPSs) available	X	--	AISC 360-16 N5.4-1: AWS D1.1	1705.2.1
YES	c. Manufacturer certifications for welding consumables available	X	--		
YES	d. Material identification (type/grade)[2]	--	X		
YES	e. Welder identification system[2]	--	X		
YES	f. Fit-up of groove welds (including joint geometry)[2] 1) Joint preparations 2) Dimensions (alignment, root opening, root face, bevel) 3) Cleanliness (condition of steel surfaces) 4) Tacking (tack weld quality and location) 5) Backing type and fit (if applicable)	--	X		
YES	g. Fit-up of CJP groove welds of HSS T-, Y- and K-joints without backing (including joint geometry) 1) Joint preparations 2) Dimensions (alignment, root opening, root face, bevel) 3) Cleanliness (condition of steel surfaces) 4) Tacking (tack weld quality and location)	X	--		
YES	h. Configuration and finish of access holes.[2]	--	X		
YES	i. Fit-up of fillet welds[2] 1) Dimensions (alignment, gaps at root) 2) Cleanliness (condition of steel surfaces) 3) Tacking (tack weld quality and location)	--	X		
YES	j. Check welding equipment	--	X		
	2. Inspection tasks during welding:				
YES	a. Control and handling of welding consumables[2] 1) Packaging 2) Exposure control	--	X		
YES	b. No welding over cracked tack welds[2]	--	X		
YES	c. Environmental conditions[2] 1) Wind speed within limits 2) Precipitation and temperature	--	X		
YES	d. WPS followed[2] 1) Settings on weld equipment 2) Travel speed 3) Selected welding materials 4) Shielding gas type/flow rate 5) Preheat applied 6) Interpass temperature maintained (min./max.) 7) Proper position (F, V, H, OH)	--	X	AISC 360-16 N5.4-2: AWS D1.1	1705.2.1
YES	e. Welding techniques[2] 1) Interpass and final cleaning 2) Each pass within profile limitations 3) Each pass meets quality requirements	--	X		
YES	f. Placement and installation of steel headed stud anchors	X	--		
	3. Inspection tasks after welding:				
YES	a. Welds cleaned	--	X		
YES	b. Size, length and location of welds	X	--		
YES	c. Welds meet visual acceptance criteria 1) Crack prohibition 2) Weld/base-metal fusion 3) Crater cross section 4) Weld profiles 5) Weld size 6) Undercut 7) Porosity	X	--	AISC 360-16 N5.4-3: AWS D1.1	1705.2.1
YES	d. Arc strikes	X	--		
YES	e. k-area[3]	X	--		
YES	f. Weld access holes in rolled heavy shapes and built-up heavy shapes[4]	X	--		
YES	g. Backing removed and weld tabs removed (if required)	X	--		
YES	h. Repair activities	X	--		
YES	i. Document acceptance or rejection of welded joint or member	X	--		
YES	j. No prohibited welds have been added without the approval of the EOR	X	--		

1. Inspection tasks noted in this table are the responsibility of the Special Inspector or Quality Assurance Inspector (QAI). The fabricator and erector are responsible for all inspection tasks indicated in AISC 360-16 Section N5 and assigned to the Quality Control Inspector (QCI)

2. Inspection tasks may be coordinated with the fabricator or erector's Quality Control Inspector (QCI) where indicated with this footnote. All other tasks shall be performed by the Special Inspector.

3. When welding of doubler plates, continuity plates or stiffeners has been performed in the k-area, visually inspect the web k-area for cracks within 3 in. (75 mm) of the weld.

4. After rolled heavy shapes and built-up heavy shapes are welded, visually inspect the weld access hole for cracks.

VERIFICATION AND INSPECTION TASKS FOR BOLTING STRUCTURAL STEEL[1] (AISC 360-16 Tables N5.6)

SPECIAL INSPECTION REQUIRED	VERIFICATION AND INSPECTION	INSPECTION FREQUENCY		REFERENCED STANDARD	IBC REFERENCE
		CONTINUOUS	PERIODIC		
	1. Inspection tasks prior to bolting:				
YES	a. Manufacturer's certifications available for fastener materials	X	--	AISC 360-16 N5.6-1	1705.2.1
YES	b. Fasteners marked in accordance with ASTM requirements	--	X		
YES	c. Correct fasteners selected for the joint detail (grade, type, bolt length if threads are to be excluded from shear plane)[2]	--	X		
YES	d. Correct bolting procedure selected for joint detail[2]	--	X		
YES	e. Connecting elements, including the appropriate faying surface condition and hole preparation, if specified, meet applicable requirements	--	X		
YES	f. Pre-installation verification testing by installation personnel observed and documented for fastener assemblies and methods used	--	X		
YES	g. Proper storage provided for bolts, nuts, washers and other fastener components	--	X		
	2. Inspection tasks during bolting:				
YES	a. Fastener assemblies placed in all holes and washers and nuts are postioned as required[2]	--	X	AISC 360-16 N5.6-2	1705.2.1
YES	b. Joint brought to the snug-tight condition prior to the pretensioning operation[2]	--	X		
YES	c. Fastener component not turned by the wrench prevented from rotating.[2]	--	X		
YES	d. Fasteners are pretensioned in accordance with the RCSC Specification, progressing systematically from the most rigid point toward the free edges	--	X		
	3. Inspection tasks after bolting:				
YES	a. Document acceptance or rejection of bolted connections	X	--	AISC 360-16 N5.6-3	1705.2.1

1. Inspection tasks noted in this table are the responsibility of the Special Inspector or Quality Assurance Inspector (QAI). The fabricator and erector are responsible for all inspection tasks indicated in AISC 360-16 Section N5 and assigned to the Quality Control Inspector (QCI)

2. Inspection tasks may be coordinated with the fabricator or erector's Quality Control Inspector (QCI) where indicated with this footnote. All other tasks shall be performed by the Special Inspector.

VERIFICATION AND INSPECTION OF CONCRETE CONSTRUCTION (IBC TABLE 1705.3)

SPECIAL INSPECTION REQUIRED	VERIFICATION AND INSPECTION	INSPECTION FREQUENCY		REFERENCED STANDARD	IBC REFERENCE
		CONTINUOUS	PERIODIC		
YES	1. Inspect reinforcement, including prestressing tendons, and verify placement.	--	X	ACI 318 Ch. 20, 25.2, 25.3, 26.6.1-26.6.3	1908.4
	2. Reinforcing bar welding:				
YES	a. Verify weldability of reinforcing bars other than ASTM A706	--	X	AWS D1.4 ACI 318: 26.6.4	--
YES	b. Inspect single-pass fillet welds, maximum 5/16"	--	X		
YES	c. Inspect all other welds.	X	--		
YES	3. Inspect anchors and dowels cast in concrete.	--	X	ACI 318: 17.8.2	--
	4. Inspect post-installed anchors and dowels in hardened concrete.				
YES	a. Mechanical anchors and adhesive anchors and dowels installed in horizontally or upwardly inclined orientations to resist sustained tension loads.	X[1]	--	ACI 318: 17.8.2.4	--
YES	b. Mechanical anchors and adhesive anchors and dowels not defined in 4.a.	--	X[1]	ACI 318: 17.8.2	
YES	5. Verify use of required design mix.	--	X	ACI 318: Ch. 19, 26.4.3, 26.4.4	1904.1, 1904.2, 1908.2, 1908.3
YES	6. Prior to concrete placement, fabricate specimens for strength tests, perform slump and air content tests, and determine the temperature of the concrete.	X	--	ASTM C172 ASTM C31 ACI 318: 26.5, 26.12	1908.10
YES	7. Inspect concrete and shotcrete placement for proper application techniques.	X	--	ACI 318: 26.5	1908.6, 1908.7, 1908.8
YES	8. Verify maintenance of specified curing temperature and techniques.	--	X	ACI 318: 26.5.3-26.5.5	1908.9
	9. Inspection of prestressed concrete:				
YES	a. Application of prestressing forces	X	--	ACI 318: 26.10	--
YES	b. Grouting of bonded prestressing tendons	X	--	ACI 318: 26.10	
YES	10. Inspect erection of precast concrete members.	--	X	ACI 318: 26.9	--
YES	11. Verify in-situ concrete strength, prior to stressing of tendons in post-tensioned concrete and prior to removal of shores and forms from beams and structural slabs.	--	X	ACI 318: 26.11.2	--
YES	12. Inspect formwork for shape, location and dimensions of the concrete member being formed.	--	X	ACI 318: 26.11.1.2(b)	--

1. Post-Installed anchors and dowels shall be either (a.) visually inspected during installation, or (b.) load tested after installation as noted below:
   a. Visual inspections shall be performed during the installation by a Special Inspector certified by ACI as a "Post-Installed Concrete Anchor Installation Inspector". Submit a report to the licensed design professional and building official documenting that the work covered by the report has been performed and that the materials used and the installation procedures used conform with the approved construction documents and the Manufacturer's Printed Installation Instructions.
   b. Load Testing shall comply with the following:
      i. Test at least ten (10) percent of each type and diameter of post-installed anchors. If one or more anchors fail the test, all post-installed anchors of the same diameter and type installed the same day as the failed anchor shall be load tested at the contractor's expense. If additional anchors fail, the engineer may require testing all anchors of the same diameter and type already installed at the contractor's expense.
      ii. Tension testing shall comply with ASTM E488
      iii. Test post-installed anchors to 50 percent of ultimate tensile capacity of post-installed anchor.
      iv. Apply test loads with a calibrated hydraulic ram.
      v. Displacement of post-installed anchors shall not exceed D/10, where D is nominal diameter of anchor being tested.
      vi. Correct defective work by removing and replacing or correcting, as directed by engineer.
      vii. Contractor shall pay for all corrections, engineering, and additional testing associated with failed anchor tests.
      viii. Testing agency shall submit test results to contractor and engineer with 24 hours of completion of test.

LEVEL 2 VERIFICATION AND INSPECTION OF MASONRY CONSTRUCTION (TMS 602-16 Table 3 & Table 4)

SPECIAL INSPECTION REQUIRED	VERIFICATION, INSPECTION AND TESTING	INSPECTION FREQUENCY		REFERENCE FOR CRITERIA
		CONTINUOUS	PERIODIC	
	MINIMUM TESTS			
YES	Prior to construction, verification of compliance of submittals.	--	--	TMS 602-16 Art. 1.5
YES	Prior to construction, verification of f'm and f'AAC , except where specifically exempted by the code.	--	--	TMS 602-16 Art. 1.4 b
YES	During construction, verification of slump flow and Visual Stability Index (VSI) when self-consolidating grout is delivered tot the project site.	--	--	TMS 602-16 Art. 1.5 &1.6.3
	INSPECTION TASKS			
	1. As masonry construction begins, verify that the following are in compliance:			
YES	a. Proportions of site-prepared mortar	--	X	TMS 602-16 Art. 2.1, 2.6 A, & 2.6 C
NO	b. Grade and size of prestressing tendons and anchorages	--	X	TMS 602-16 Art. 2.4 B & 2.4 H
YES	c. Grade, type and size of reinforcement and anchor bolts, and prestressing tendons and anchorages	--	X	TMS 602-16 Art. 3.4 & 3.6 A
NO	d. Prestressing technique	--	X	TMS 602-16 Art. 3.6 B
NO	e. Properties of thin-bed mortar for AAC masonry	X[1]	X[2]	TMS 602-16 Art. 2.1 C.1
YES	f. Sample panel construction	--	X	TMS 602-16 Art. 1.6 D
	2. Prior to grouting, verify that the following are in compliance:			
YES	a. Grout space	--	X	TMS 602-16 Art. 3.2 D & 3.2 F
NO	b. Placement of prestressing tendons and anchorages	--	X	TMS 602-16 Art. 2.4 & 3.6, TMS 402-16 Sec. 10.8 & 10.9
YES	c. Placement of reinforcement, connectors, and anchor bolts	--	X	TMS 602-16 Art. 3.2 E & 3.4, TMS 402-16 Sec. 6.1, 6.3.1, 6.3.6, & 6.3.7
YES	d. Proportions of site-prepared grout and prestressing grout for bonded tendons	--	X	TMS 602-16 Art. 2.6 B & 2.4 G.1.b
	3. Verify compliance of the following during construction:			
YES	a. Materials and procedures with the approved submittals	--	X	TMS 602-16 Art. 1.5
YES	b. Placement of masonry units and mortar joint construction	--	X	TMS 602-16 Art. 3.3 B
YES	c. Size and location of structural members	--	X	TMS 602-16 Art. 3.3 F
YES	d. Type, size, and location of anchors, including other details of anchorage of masonry to structural members, frames, or other construction	--	X	TMS 402-16 Sec. 1.2.1 (e), 6.2.1, & 6.3.1
YES	e. Welding of reinforcement	X	--	TMS 402-16 Sec. 6.1.6.1.2
YES	f. Preparation, construction and protection of masonry during cold weather (temperature below 40°F (4.4°C)) or hot weather (temperature above 90°F (32.2°C))	--	X	TMS 602-16 Art. 1.8 C & 1.8 D
NO	g. Application and measurement of prestressing force	X	--	TMS 602-16 Art. 3.6 B
NO	h. Placement of grout and prestressing grout for bonded tendons is in compliance	X	--	TMS 602-16 Art. 3.5 & 3.6 C
NO	i. Placement of AAC masonry units and construction of thin-bed mortar joints	X[1]	X[2]	TMS 602-16 Art. 3.3 B.9 & 3.3 F.1.b
YES	4. Observe preparation of grout specimens, mortar specimens and/or prisms	--	X	TMS 602-16 Art. 1.4 B.2.a.3, 1.4 B.2.b.3, 1.4 B.2.c.3, 1.4 B.3, & 1.4 B.4
	5. Inspect post-installed anchors and dowels in masonry			
YES	a. Mechanical anchors and adhesive anchors and dowels installed in horizontally or upwardly inclined orientations to resist sustained tension loads.	X[3]	--	Manufacturer's specifications & printed installation instructions
YES	b. Mechanical anchors and adhesive anchors and dowels not defined by 5 a.	--	X[3]	Manufacturer's specifications & printed installation instructions

1. Required for the first 5,000 square feet (465 square meters) of AAC masonry.

2. Required after the first 5,000 square feet (465 square meters) of AAC masonry.

3. Post-Installed anchors and dowels shall be either (a.) visually inspected during installation, or (b.) load tested after installation as noted below:
   a. Visual inspections shall be performed during the installation by a Special Inspector certified by ACI as a "Post-Installed Concrete Anchor Installation Inspector". Submit a report to the licensed design professional and building official documenting that the work covered by the report has been performed and that the materials used and the installation procedures used conform with the approved construction documents and the Manufacturer's Printed Installation Instructions.
   b. Load Testing shall comply with the following:
      i. Test at least ten (10) percent of each type and diameter of post-installed anchors. If one or more anchors fail the test, all post-installed anchors of the same diameter and type installed the same day as the failed anchor shall be load tested at the contractor's expense. If additional anchors fail, the engineer may require testing all anchors of the same diameter and type already installed at the contractor's expense.
      ii. Tension testing shall comply with ASTM E488
      iii. Test post-installed anchors to 50 percent of ultimate tensile capacity of post-installed anchor.
      iv. Apply test loads with a calibrated hydraulic ram.
      v. Displacement of post-installed anchors shall not exceed D/10, where D is nominal diameter of anchor being tested.
      vi. Correct defective work by removing and replacing or correcting, as directed by engineer.
      vii. Contractor shall pay for all corrections, engineering, and additional testing associated with failed anchor tests.
      viii. Testing agency shall submit test results to contractor and engineer with 24 hours of completion of test.

TEXAS PARKS & WILDLIFE

RICHTER ARCHITECTS

LAKE CORPUS CHRISTI STATE PARK
RESTROOM REPLACEMENT
PROJECT NUMBER 1210196A

DATE: 12-4-2020
DESIGNED BY: JQ
DRAWN BY: JQ
REVIEWED BY: JQ
REVISED: 3-9-2021
1 - Addendum #4
REVISED:

REVISED:

PHASE: 100% CD

SHEET TITLE
SPECIAL INSPECTIONS

SHEET NUMBER
S103

shaping the built environment
JQ Infrastructure
JQ INFRASTRUCTURE, LLC
100 GLASS STREET, SUITE 201
972.392.7340
DALLAS, TEXAS 75207
JQIENG.COM
PROJECT NO: 4200119
TBPE FIRM F-7986
12/4/2020
STATE OF TEXAS
BRIAN J. ROBERTSON
108844
LICENSED
PROFESSIONAL ENGINEER

C:\Users\brobertson\Documents\4200119-Struct-19_brianGYWLS.rvt

LEVEL 2 VERIFICATION AND INSPECTION OF MASONRY CONSTRUCTION (TMS 602-16 Table 3 & Table 4)				
SPECIAL INSPECTION REQUIRED	VERIFICATION, INSPECTION AND TESTING	INSPECTION FREQUENCY		REFERENCE FOR CRITERIA
		CONTINUOUS	PERIODIC	
MINIMUM TESTS				
YES	Prior to construction, verification of compliance of submittals.	--	--	TMS 602-16 Art. 1.5
YES	Prior to construction, verification of f'm and f'AAC , except where specifically exempted by the code.	--	--	TMS 602-16 Art. 1.4 b
YES	During construction, verification of slump flow and Visual Stability Index (VSI) when self-consolidating grout is delivered tot the project site.	--	--	TMS 602-16 Art. 1.5 &1.6.3
INSPECTION TASKS				
	1. As masonry construction begins, verify that the following are in compliance:			
YES	a. Proportions of site-prepared mortar	--	X	TMS 602-16 Art. 2.1, 2.6 A, & 2.6 C
NO	b. Grade and size of prestressing tendons and anchorages	--	X	TMS 602-16 Art. 2.4 B & 2.4 H
YES	c. Grade, type and size of reinforcement and anchor bolts, and prestressing tendons and anchorages	--	X	TMS 602-16 Art. 3.4 & 3.6 A
NO	d. Prestressing technique	--	X	TMS 602-16 Art. 3.6 B
NO	e. Properties of thin-bed mortar for AAC masonry	X [1]	X[2]	TMS 602-16 Art. 2.1 C.1
YES	f. Sample panel construction	--	X	TMS 602-16 Art. 1.6 D
	2. Prior to grouting, verify that the following are in compliance:			
YES	a. Grout space	--	X	TMS 602-16 Art. 3.2 D & 3.2 F
NO	b. Placement of prestressing tendons and anchorages	--	X	TMS 602-16 Art. 2.4 & 3.6, TMS 402-16 Sec. 10.8 & 10.9
YES	c. Placement of reinforcement, connectors, and anchor bolts	--	X	TMS 602-16 Art. 3.2 E & 3.4, TMS 402-16 Sec. 6.1, 6.3.1, 6.3.6, & 6.3.7
YES	d. Proportions of site-prepared grout and prestressing grout for bonded tendons	--	X	TMS 602-16 Art. 2.6 B & 2.4 G.1.b
	3. Verify compliance of the following during construction:			
YES	a. Materials and procedures with the approved submittals	--	X	TMS 602-16 Art. 1.5
YES	b. Placement of masonry units and mortar joint construction	--	X	TMS 602-16 Art. 3.3 B
YES	c. Size and location of structural members	--	X	TMS 602-16 Art. 3.3 F
YES	d. Type, size, and location of anchors, including other details of anchorage of masonry to structural members, frames, or other construction	--	X	TMS 402-16 Sec. 1.2.1 (e), 6.2.1, & 6.3.1
YES	e. Welding of reinforcement	X	--	TMS 402-16 Sec. 6.1.6.1.2
YES	f. Preparation, construction and protection of masonry during cold weather (temperature below 40°F (4.4°C)) or hot weather (temperature above 90°F (32.2°C))	--	X	TMS 602-16 Art. 1.8 C & 1.8 D
NO	g. Application and measurement of prestressing force	X	--	TMS 602-16 Art. 3.6 B
NO	h. Placement of grout and prestressing grout for bonded tendons is in compliance	X	--	TMS 602-16 Art. 3.5 & 3.6 C
NO	i. Placement of AAC masonry units and construction of thin-bed mortar joints	X[1]	X[2]	TMS 602-16 Art. 3.3 B.9 & 3.3 F.1.b
YES	4. Observe preparation of grout specimens, mortar specimens and/or prisms	--	X	TMS 602-16 Art. 1.4 B.2.a.3, 1.4 B.2.b.3, 1.4 B.2.c.3, 1.4 B.3, & 1.4 B.4
	5. Inspect post-installed anchors and dowels in masonry			
YES	a. Mechanical anchors and adhesive anchors and dowels installed in horizontally or upwardly inclined orientations to resist sustained tension loads.	X[3]	--	Manufacturer's specifications & printed installation instructions
YES	b. Mechanical anchors and adhesive anchors and dowels not defined by 5 a.	--	X[3]	Manufacturer's specifications & printed installation instructions

1. Required for the first 5,000 square feet (465 square meters) of AAC masonry.

2. Required after the first 5,000 square feet (465 square meters) of AAC masonry.

3. Post-Installed anchors and dowels shall be either (a.) visually inspected during installation, or (b.) load tested after installation as noted below:
   a. Visual inspections shall be performed during the installation by a Special Inspector certified by ACI as a "Post-Installed Concrete Anchor Installation Inspector". Submit a report to the licensed design professional and building official documenting that the work covered by the report has been performed and that the materials used and the installation procedures used conform with the approved construction documents and the Manufacturer's Printed Installation Instructions.
   b. Load Testing shall comply with the following:
      i. Test at least ten (10) percent of each type and diameter of post-installed anchors. If one or more anchors fail the test, all post-installed anchors of the same diameter and type installed the same day as the failed anchor shall be load tested at the contractor's expense. If additional anchors fail, the engineer may require testing all anchors of the same diameter and type already installed at the contractor's expense.
      ii. Tension testing shall comply with ASTM E488
      iii. Test post-installed anchors to 50 percent of ultimate tensile capacity of post-installed anchor.
      iv. Apply test loads with a calibrated hydraulic ram.
      v. Displacement of post-installed anchors shall not exceed D/10, where D is nominal diameter of anchor being tested.
      vi. Correct defective work by removing and replacing or correcting, as directed by engineer.
      vii. Contractor shall pay for all corrections, engineering, and additional testing associated with failed anchor tests.
      viii. Testing agency shall submit test results to contractor and engineer with 24 hours of completion of test.

VERIFICATION AND INSPECTION OF WOOD (IBC 1705.5)			
SPECIAL INSPECTION REQUIRED	VERIFICATION, INSPECTION AND TESTING	INSPECTION FREQUENCY	
		CONTINUOUS	PERIODIC
YES	1. Fabrication process of prefabricated wood structural elements and assemblies shall be in accordance with IBC 1704.2.5 and local amendments	--	X
	2. Inspect lateral resisting elements, including shear walls, braces, diaphragms, collectors (drag struts), and hold-downs for the following:		
YES	a. Grade and thickness of framing members on building plans, including wood structural panel sheathing.	--	X
YES	b. Nominal size of framing members at adjoining panel edges for diaphragms and shear walls.	--	X
YES	c. Nail or staple diameter and length for diaphragms and shear walls.	--	X
YES	d. Number of fastener lines and the spacing between fasteners in each line and at edge margins	--	X
YES	e. Bolting, anchoring, and other fastening of components.	--	X
	3. Trusses with overall heights of 60" or greater, inspector shall verify the following:		
YES	a. Permanent individual truss member restraint/bracing has been installed in accordance with the approved truss submittal package.	X	--
	4. Trusses with clear span 60'-0" or greater, inspector shall verify the following:		
YES	a. Temporary installation restraint/bracing installed per approved truss submittal package.	X	--

VERIFICATION AND INSPECTION OF SOILS (IBC TABLE 1705.6)			
SPECIAL INSPECTION REQUIRED	VERIFICATION, INSPECTION AND TESTING	INSPECTION FREQUENCY	
		CONTINUOUS	PERIODIC
YES	1. Verify materials below shallow foundations are adequate to achieve the design bearing capacity.	--	X
YES	2. Verify excavations are extended to proper depth and have reached proper material.	--	X
YES	3. Perform classification and testing of compacted fill materials.	--	X
YES	4. Verify use of proper materials, densities and lift thicknesses during placement and compaction of compacted fill.	X	--
YES	5. Prior to placement of compacted fill, inspect subgrade and verify that site has been prepared properly.	--	X

VERIFICATION AND INSPECTION FOR WIND RESISTANCE (IBC 1705.11)					
SPECIAL INSPECTION REQUIRED	VERIFICATION AND INSPECTION	INSPECTION FREQUENCY		REFERENCED STANDARD	IBC REFERENCE
		CONTINUOUS	PERIODIC		
	1. Structural Wood:				
YES	a. Field gluing of elements of the main windforce-resisting system.	X	--	--	1705.11.1
YES	b. Nailing, bolting, anchoring and other fastening of components within the main windforce-resisting system, including wood shear walls, wood diaphragms, drag struts/collectors, braces and hold-downs, except if fastener spacing at panel edges exceeds 4" on center.	--	X		
	3. Wind-resisting Components in all structures:				
YES	a. Roof covering, roof deck and roof framing connections	--	X	--	1705.11.3
YES	b. Exterior wall covering and wall connections to roof and floor diaphragms and framing	--	X		

TEXAS PARKS & WILDLIFE

RICHTER ARCHITECTS

LAKE CORPUS CHRISTI STATE PARK
RESTROOM REPLACEMENT
PROJECT NUMBER 1210196A

DATE: 12-4-2020
DESIGNED BY: JQ
DRAWN BY: JQ
REVIEWED BY: JQ
REVISED: 3-9-2021
1 - Addendum #4
REVISED:

REVISED:

PHASE: 100% CD

SHEET TITLE
SPECIAL INSPECTIONS

SHEET NUMBER
S104

shaping the built environment

JQ INFRASTRUCTURE, LLC
300 GLASS STREET, SUITE 201
972.392.7340
DALLAS, TEXAS 75207
JQIENG.COM
TBPE FIRM F-7986

PROJECT NO: 4200119

12/4/2020
STATE OF TEXAS
BRIAN J. ROBERTSON
108844
LICENSED
PROFESSIONAL ENGINEER

C:\Users\brobertson\Documents\4200119-Struct-19_brianGVWLS.rvt

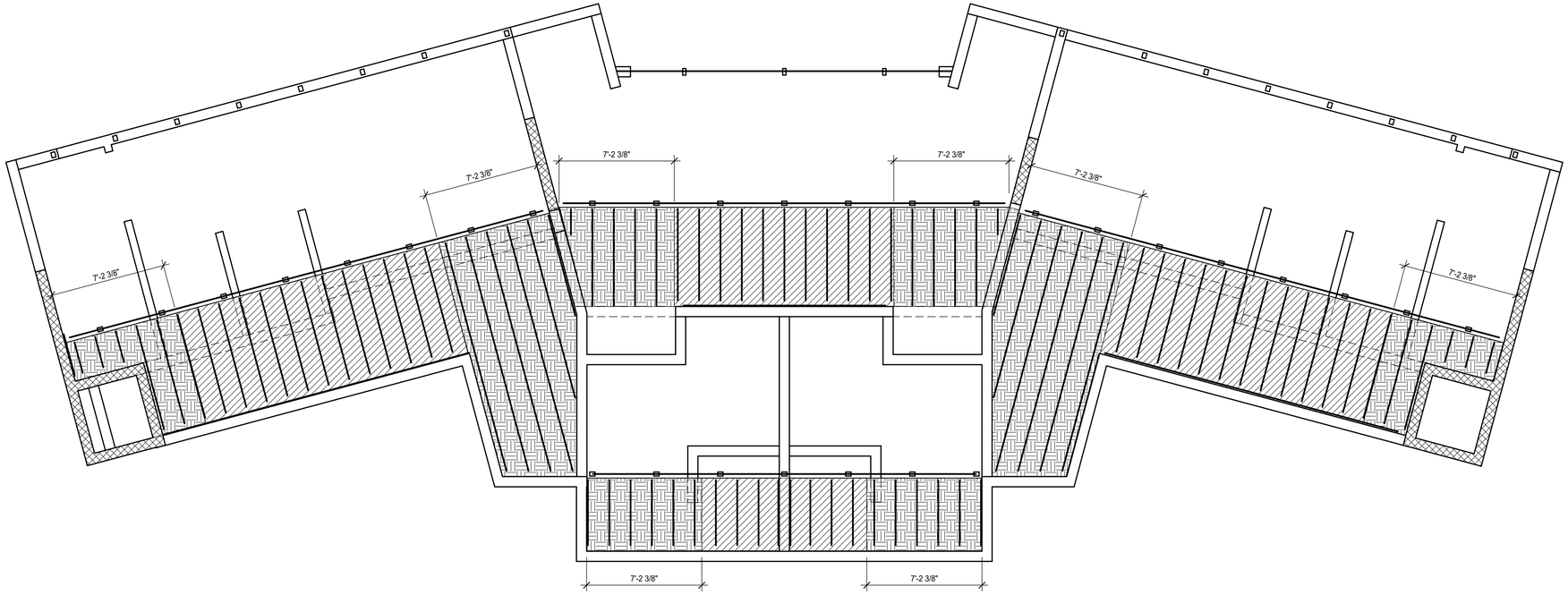

north

1 LOW ROOF FRAMING WIND LOADING PLAN
SCALE: 1/4" = 1'-0"

GROSS WIND LOADS (ULTIMATE)				
ZONE	WIND PRESSURES (PSF)			
	A=10FT^2	A=20FT^2	A=50FT^2	A>100FT^2
	32.7, -82.7	31.5, -81.5	30.0, -80.0	28.8, -78.8
	32.7, -121.2	31.5, -109.6	30.0, -94.3	28.8, -82.7

PLAN NOTES:

1. POSITIVE LOADS ARE DOWNWARD FORCES & NEGATIVE LOADS ARE UPWARD FORCES.

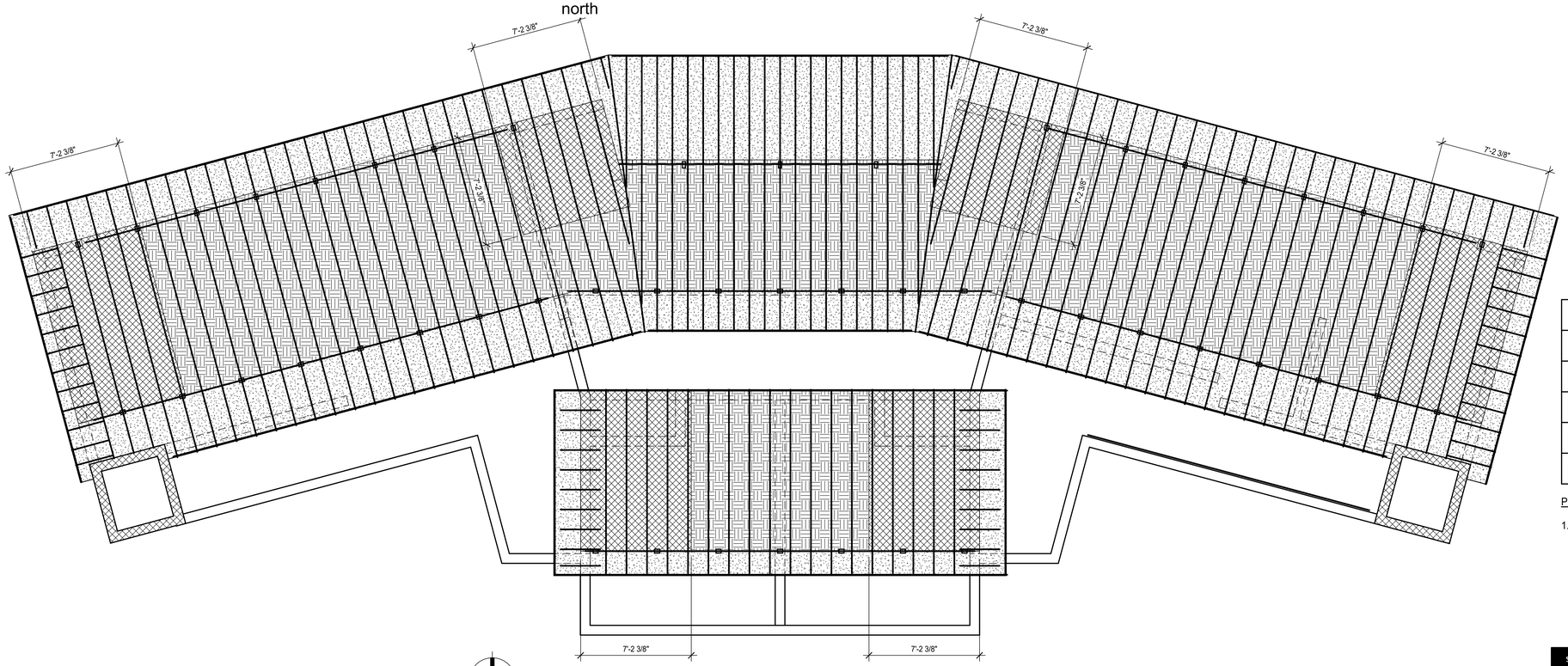

north

2 HIGH ROOF FRAMING WIND LOADING PLAN
SCALE: 1/4" = 1'-0"

GROSS WIND LOADS (ULTIMATE)				
ZONE	WIND PRESSURES (PSF)			
	A=10FT^2	A=20FT^2	A=50FT^2	A>100FT^2
	32.7, -63.5	31.5, -63.5	30.0, -63.5	28.8, -63.5
	32.7, -82.7	31.5, -81.5	30.0, -80.0	28.8, -78.8
	32.7, -121.2	31.5, -109.6	30.0, -94.3	28.8, -82.7
	-113.6,-155.9	-102,-144.4	-82.8,-125.1	-71.2,-113.6

PLAN NOTES:

1. POSITIVE LOADS ARE DOWNWARD FORCES & NEGATIVE LOADS ARE UPWARD FORCES.

TEXAS PARKS & WILDLIFE

RICHTER ARCHITECTS

LAKE CORPUS CHRISTI STATE PARK
RESTROOM REPLACEMENT
PROJECT NUMBER 1210196A

DATE: 12-4-2020
DESIGNED BY: JQ
DRAWN BY: JQ
REVIEWED BY: JQ
REVISED: 3-9-2021
1 - Addendum #4
REVISED:

REVISED:

PHASE: 100% CD

SHEET TITLE
WIND LOADING PLANS

SHEET NUMBER
S105

shaping the built environment

JQ INFRASTRUCTURE, LLC
100 GLASS STREET, SUITE 201
972.392.7340
PROJECT NO: 4200119
DALLAS, TEXAS 75207
JQENG.COM
TBPE FIRM F-7986

12/4/2020
STATE OF TEXAS
BRIAN J. ROBERTSON
108844
LICENSED
PROFESSIONAL ENGINEER

C:\Users\brobertson\Documents\4200119-Struct-19_brianGVWLS.rvt

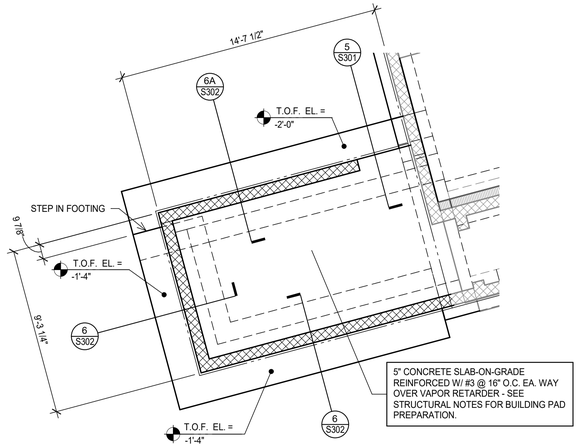

north

2 FOUNDATION PLAN - ALT. #1

SCALE: 1/4" = 1'-0"

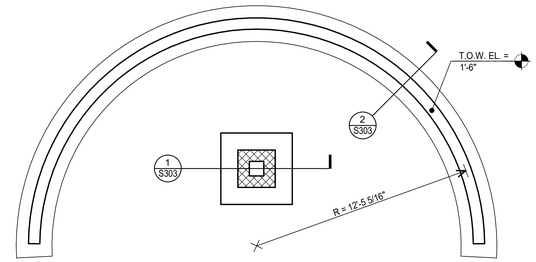

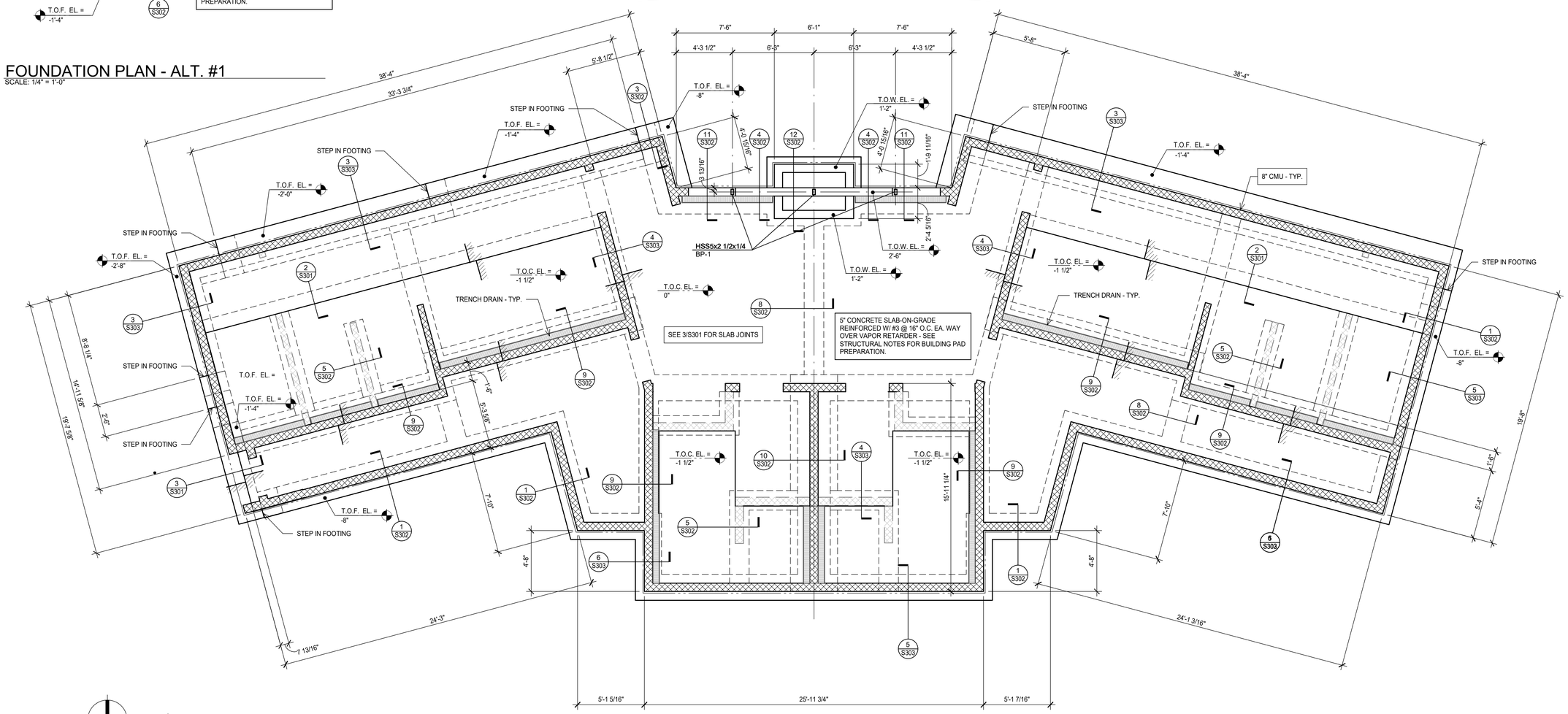

north

1 FOUNDATION PLAN

SCALE: 1/4" = 1'-0"

PLAN NOTES:

1. FINISH FLOOR ELEVATION = 100'-0", UNLESS NOTED OTHERWISE. SEE CIVIL FOR ACTUAL ELEVATION.
2. TOP OF CONCRETE ELEVATION (T.O.C. EL.) = FINISH FLOOR. UNLESS RECESSED TO RECEIVE FLOORING MATERIALS.
3. REFER TO THE ARCHITECTURAL DRAWINGS FOR EXACT LOCATIONS OF FLOOR RECESSES, DROPS AND SLOPES NOT DIMENSIONED ON PLAN.
4. CENTERLINES OF FOOTINGS NOT SPECIFICALLY LOCATED ON PLAN BY NOTE OR DIMENSION SHALL BE LOCATED AS FOLLOWS:
   A. SUPPORTING FREESTANDING COLUMNS: CENTERLINES OF COLUMN.
   B. SUPPORTING FOOTINGS AND WALLS: CENTERLINE OF FOOTINGS OR WALL IN ONE DIRECTION, GRID OR AS NOTED IN OTHER DIRECTION. AT CORNER CONDITIONS: CENTERLINES OF FOOTINGS OR WALLS.
   C. COLUMNS EMBEDED IN CONTINUOUS FOOTINGS OR WALLS (PILASTERS): CENTERLINES OF THE COLUMN.
5. CONTRACTOR TO VERIFY LOCATION OF ALL EXISTING UTILITIES PRIOR TO EXCAVATING FOOTINGS.
6. TYPICAL CONCRETE SLAB THICKNESS IS 5" (OVERALL), UNLESS NOTED OTHERWISE.

SHEET INDEX:

STRUCTURAL NOTES	-S101
TYPICAL DETAILS	-S301
FOOTING SCHEDULE	-S301
BASE PLATE SCHEDULE	-S402

TEXAS PARKS & WILDLIFE

RICHTER ARCHITECTS

LAKE CORPUS CHRISTI STATE PARK
RESTROOM REPLACEMENT
PROJECT NUMBER 1210196A

DATE: 12-4-2020
DESIGNED BY: JQ
DRAWN BY: JQ
REVIEWED BY: JQ
REVISED:
REVISED:
REVISED:
PHASE: 100% CD

SHEET TITLE
FOUNDATION PLAN

SHEET NUMBER
S201

shaping the built environment
JQ INFRASTRUCTURE, LLC
100 GLASS STREET, SUITE 201
972.392.7340
DALLAS, TEXAS 75207
JQENG.COM
PROJECT NO: 4200119
TBPE FIRM F-7986
12/4/2020
STATE OF TEXAS
BRIAN J. ROBERTSON
108844
LICENSED
PROFESSIONAL ENGINEER

C:\Users\brobertson\Documents\4200119-Struct-19_Brobertson.rvt

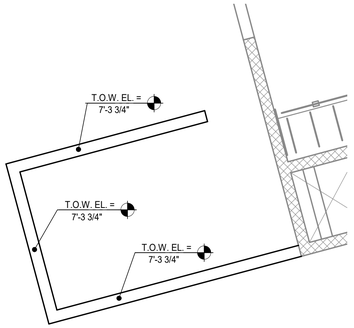

north

2 LOW ROOF FRAMING PLAN - ALT. #1

SCALE: 1/4" = 1'-0"

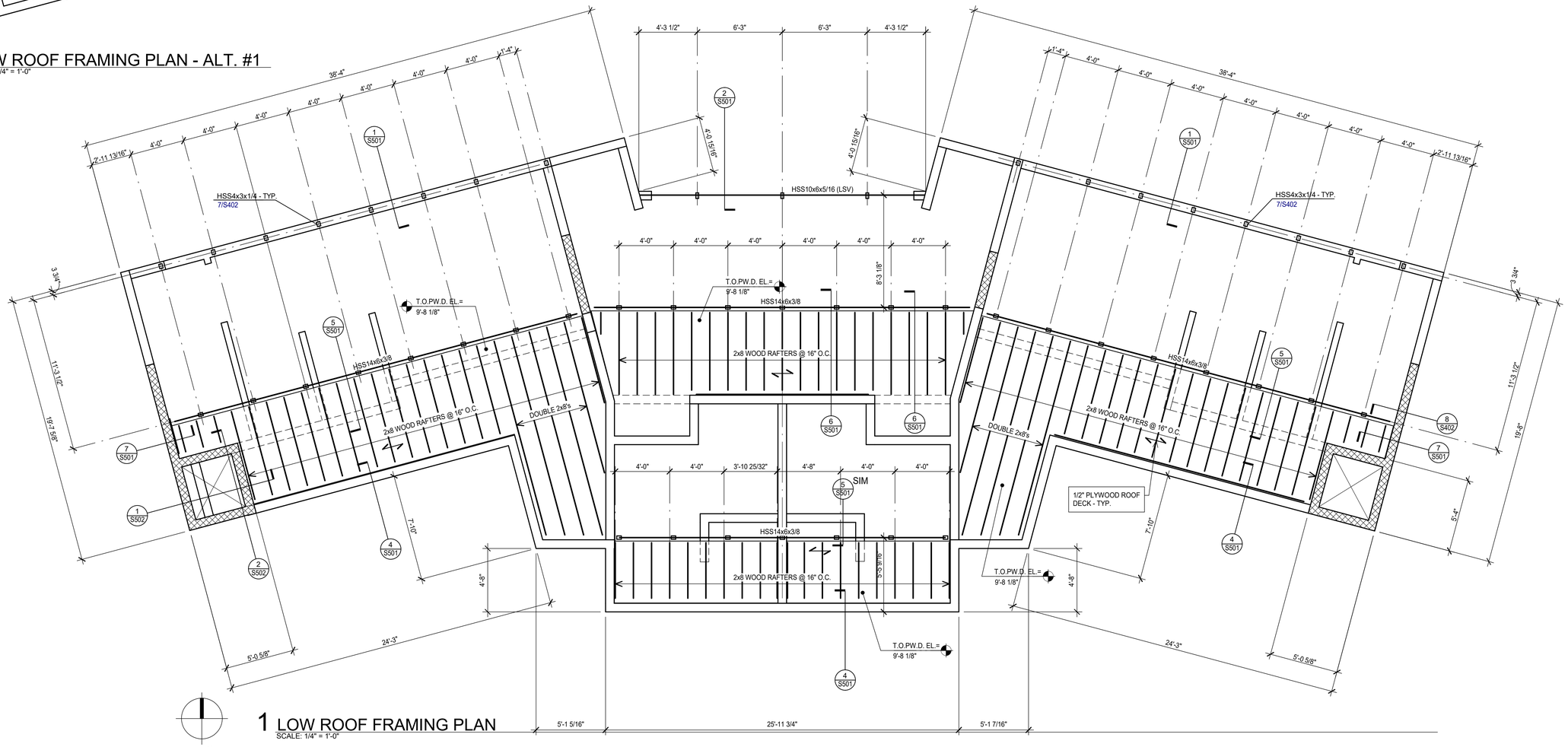

north

1 LOW ROOF FRAMING PLAN

SCALE: 1/4" = 1'-0"

PLAN NOTES:

1. SEE ARCHITECTURAL DRAWINGS FOR EXACT LOCATIONS OF ROOF SLOPES, HIPS, VALLEYS, AND RIDGES NOT SPECIFICALLY DIMENSIONED.
2. VERIFY AND COORDINATE ALL DIMENSIONS W/ ARCHITECTURAL DRAWINGS.
3. ALL STICK FRAMING FOR CANOPIES, PORCHES, AND OVERHANGS ARE 2x6 @ 24"O.C., UNLESS NOTED OTHERWISE.
4. ALL OVERBUILD FRAMING MEMBERS ARE 2x6 @ 24"O.C., UNLESS NOTED OTHERWISE.
5. ROOF DIAPHRAM SHALL BE INSTALLED AS DIAPHRAM AS DEFINED BY BUILDING CODE.

SHEET INDEX:

STRUCTURAL NOTES	-S1-01
TYPICAL DETAILS	-S5-01

TEXAS PARKS & WILDLIFE

RICHTER ARCHITECTS

LAKE CORPUS CHRISTI STATE PARK
RESTROOM REPLACEMENT
PROJECT NUMBER 1210196A

DATE: 12-4-2020
DESIGNED BY: JQ
DRAWN BY: JQ
REVIEWED BY: JQ
REVISED:
REVISED:
REVISED:
PHASE: 100% CD

SHEET TITLE
LOW ROOF FRAMING PLAN

SHEET NUMBER
S202

shaping the built environment
JQ Infrastructure
JQ INFRASTRUCTURE, LLC
100 GLASS STREET, SUITE 201
972.392.7340
DALLAS, TEXAS 75207
JQIENG.COM
PROJECT NO: 4200119
TBPE FIRM F-7986
12/4/2020
STATE OF TEXAS
BRIAN J. ROBERTSON
108844
LICENSED
PROFESSIONAL ENGINEER

C:\Users\brobertson\Documents\4200119-Struct-19_BrobertsonJQ.rvt

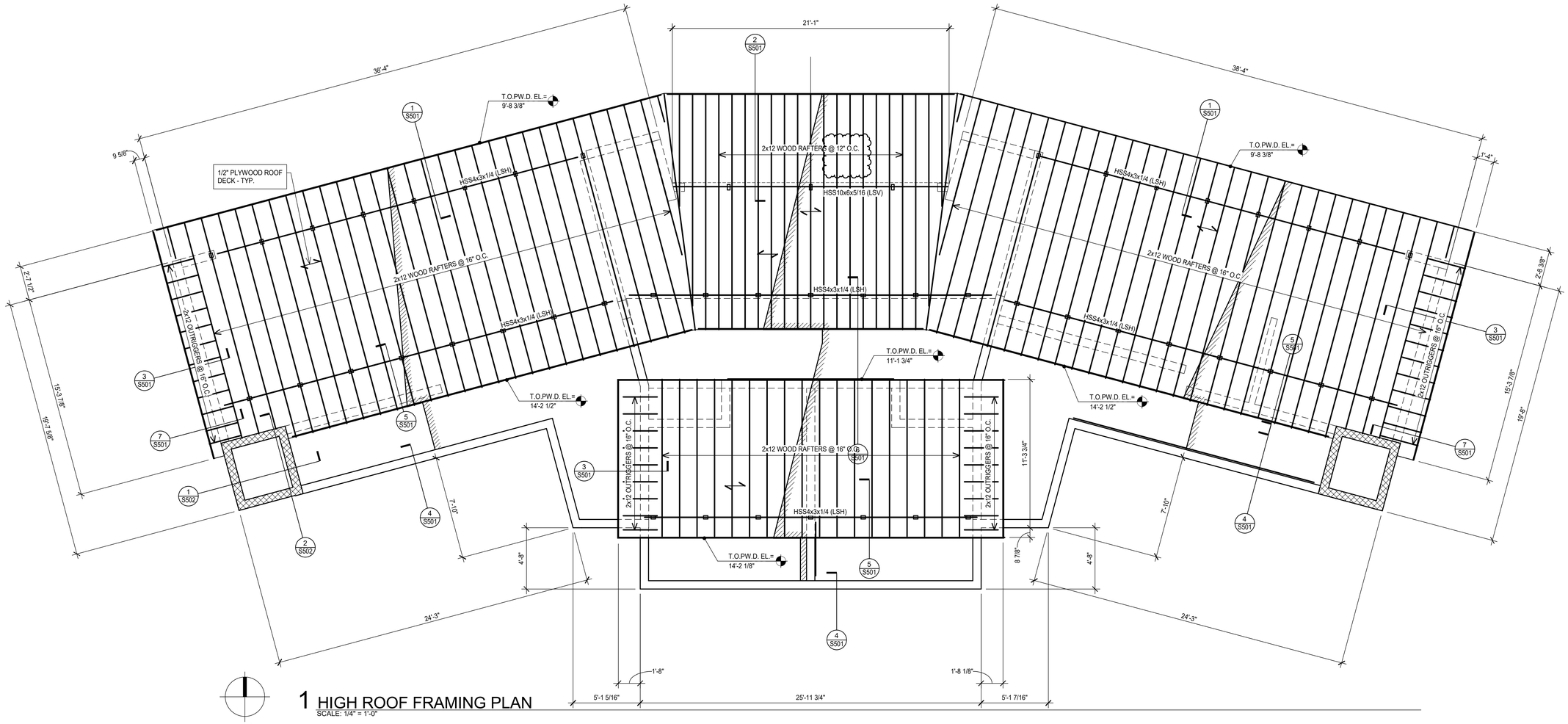

1 HIGH ROOF FRAMING PLAN

SCALE: 1/4" = 1'-0"

PLAN NOTES:

1. SEE ARCHITECTURAL DRAWINGS FOR EXACT LOCATIONS OF ROOF SLOPES, HIPS, VALLEYS, AND RIDGES NOT SPECIFICALLY DIMENSIONED.
2. VERIFY AND COORDINATE ALL DIMENSIONS W/ ARCHITECTURAL DRAWINGS.
3. ALL STICK FRAMING FOR CANOPIES, PORCHES, AND OVERHANGS ARE 2x6 @ 24"O.C., UNLESS NOTED OTHERWISE.
4. ALL OVERBUILD FRAMING MEMBERS ARE 2x6 @ 24"O.C., UNLESS NOTED OTHERWISE.
5. ROOF DIAPHRAM SHALL BE INSTALLED AS DIAPHRAM AS DEFINED BY BUILDING CODE.

SHEET INDEX:
STRUCTURAL NOTES -S1-01
TYPICAL DETAILS -S5-01

TEXAS PARKS & WILDLIFE

RICHTER ARCHITECTS

LAKE CORPUS CHRISTI STATE PARK
RESTROOM REPLACEMENT
PROJECT NUMBER 1210196A

DATE: 12-4-2020
DESIGNED BY: JQ
DRAWN BY: JQ
REVIEWED BY: JQ
REVISED: 3-9-2021
1 - Addendum #4
REVISED:
REVISED:
PHASE: 100% CD

SHEET TITLE
HIGH ROOF FRAMING PLAN

SHEET NUMBER
S203

shaping the built environment
JQ Infrastructure
JQ INFRASTRUCTURE, LLC
100 GLASS STREET, SUITE 201
972.392.7340
DALLAS, TEXAS 75207
JQIENG.COM
PROJECT NO: 4200119
TBPE FIRM F-7986
12/4/2020
STATE OF TEXAS
BRIAN J. ROBERTSON
108844
LICENSED
PROFESSIONAL ENGINEER

C:\Users\brobertson\Documents\4200119-Struct-19_brianGYWLS.rvt

NOTE:
PROVIDE ONE OF THE FOLLOWING SLIP DOWELS:
- PNA CONSTRUCTION TECHNOLOGIES 1/4" x 4 1/2" x 4 1/2" "DIAMOND DOWEL" PLATE DOWEL SYSTEM.
- GREENSTREAK 5/8" DIA. SMOOTH x 24" "SPEED DOWEL" SYSTEM.
- 1/2" DIA. x 2'-0" A36 SMOOTH ROD.

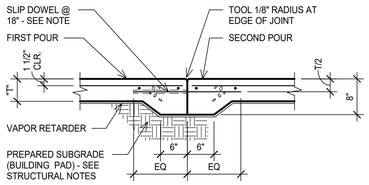

CONSTRUCTION JOINT

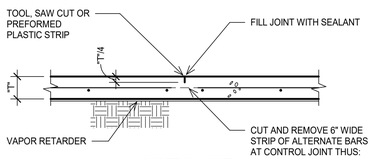

CONTROL JOINT

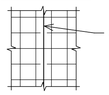

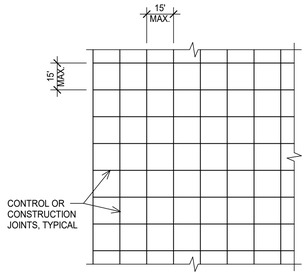

SLAB-ON-GRADE NOTES:

1. SEE PLAN FOR THICKNESS OF SLAB (T) AND REINFORCING.
2. SAWCUT JOINTS WITH IN THE TIME FRAME NOTED BELOW:
   a. 12 HOURS FOR SLABS COVERED BY FINISHES OR NON PUBLIC SPACES.
   b. 4 HOUR FOR SLABS EXPOSED TO PUBLIC VIEW OR WHERE NOTED "SOFF-CUT" BRAND SAW SHALL BE USED.
3. IF METAL FORMS ARE USED, REMOVE THEM BEFORE PLACING ADJACENT SLAB.
4. FOR SLABS WITH THICKNESS (T) GREATER THAN 6", THICKENED EDGES ARE NOT REQUIRED AT JOINTS.
5. PROVIDE A CONSTRUCTION OR A CONTROL JOINT ON THE CENTERLINES OF COLUMNS.
6. LAP REINFORCING 38 BAR DIAMETER MINIMUM.

1 TYPICAL SLAB-ON-GRADE DETAIL
NO SCALE

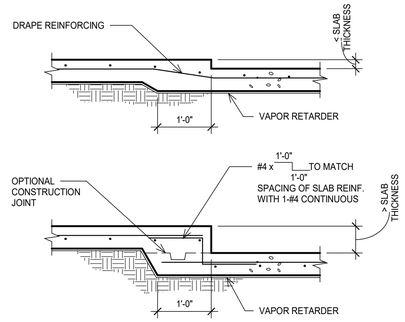

2 TYPICAL DROP IN SLAB-ON-GRADE DETAIL
NO SCALE

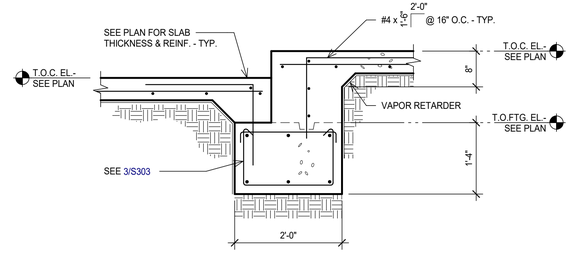

3 SECTION
SCALE: 3/4" = 1'-0"

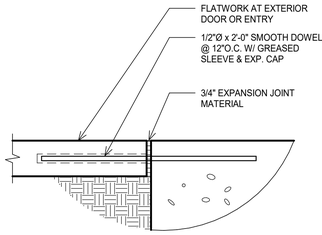

4 TYPICAL FLATWORK AT EXTERIOR DOORS AND ENTRIES DETAIL
NO SCALE

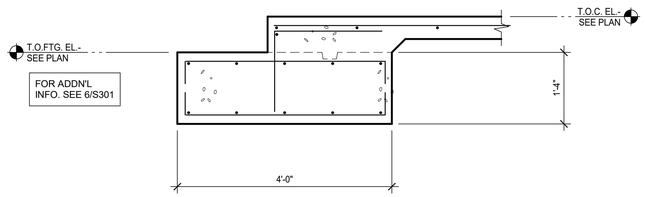

5 SECTION
SCALE: 3/4" = 1'-0"

NOTES:

1. MATCH SIZE, LOCATION AND NUMBER OF HORIZONTAL BEAM AND WALL BARS, EXCEPT THAT WHERE THERE ARE MORE THAN 2 TOP OR BOTTOM BARS, ONLY THE INSIDE AND OUTSIDE BARS MUST BE MATCHED.
2. WHERE 90 DEGREE HOOKS ARE PROVIDED FOR TOP BARS CORNER BARS MAY BE OMITTED AT TOP. WHERE 90 DEGREE HOOKS ARE PROVIDED FOR BOTTOM BARS, CORNER BARS MAY BE OMITTED AT BOTTOM.

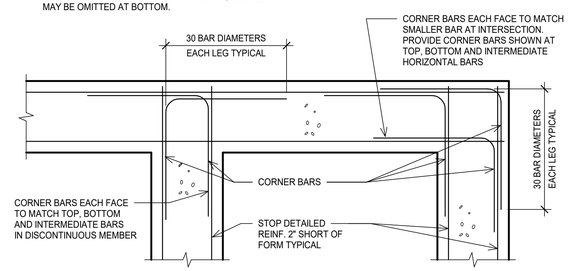

PLAN

6 TYPICAL CORNER BARS AT WALL OR GRADE BEAM INTERSECTION DETAIL
NO SCALE

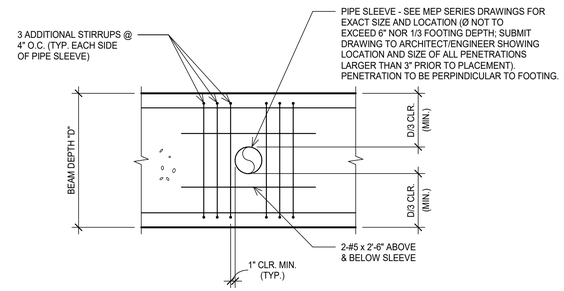

ELEVATION

7 TYPICAL HORIZONTAL FOOTING PENETRATION DETAIL
NO SCALE

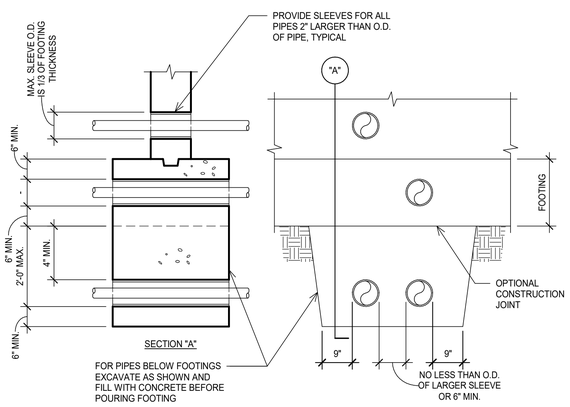

NOTES:

1. DO NOT PASS PIPES THROUGH ISOLATED FOOTINGS.
2. WHERE PIPES ARE MORE THAN 2'-0" BELOW FOOTING. BACKFILL WITH SOIL AS SPECIFIED.

8 TYPICAL PIPES AND TRENCHES AT FOOTINGS
NO SCALE

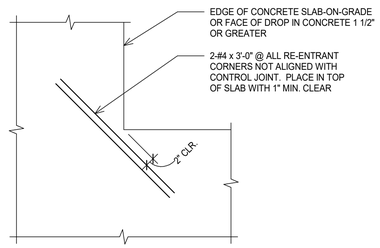

PLAN

9 TYPICAL SLAB-ON-GRADE RE-ENTRANT CORNER REINFORCING DETAIL
NO SCALE

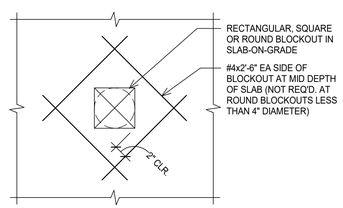

PLAN

10 TYPICAL ADDITIONAL REINFORCING AT BLOCKOUT IN SLAB-ON-GRADE DETAIL
NO SCALE

DOWEL SCHEDULE

MARK	SIZE	A	B
DWL.-A	#4	8"	3'-0"
DWL.-B	#4	3'-0"	3'-0"
DWL.-C	#4	-	4'-0"
DWL.-D	3/4" DIA. THD.	-	4'-0"
DWL.-E	1/2" DIA. THD.	-	3'-0"

NOTES:

1. SCHEDULED DOWELS ARE MARKED "DWL." ON THE SECTIONS AND DETAILS.
2. DOWEL SPACING TO BE THE SAME AS VERTICAL BEAM OR WALL REINFORCEMENT UNLESS NOTED OTHERWISE ON DETAILS.
3. DOWELS WITH "THD." IN "SIZE" COLUMN SHALL BE RICHMOND "CONTINUOUS THREADED LAGSTUD (2/25)" WITH RICHMOND "STANDARD 1/2"x4" 2/15 ANCHOR W/ WASHER" FOR 1/2" DIA. DOWELS AND "STANDARD 3/4"x6" 2/15 ANCHOR W/ WASHER" ANCHORS FOR 3/4"Ø DOWELS OR EQUAL.

11 DOWEL SCHEDULE
NO SCALE

TEXAS PARKS & WILDLIFE

RICHTER ARCHITECTS

LAKE CORPUS CHRISTI STATE PARK
RESTROOM REPLACEMENT
PROJECT NUMBER 1210196A

DATE: 12-4-2020
DESIGNED BY: JQ
DRAWN BY: JQ
REVIEWED BY: JQ
REVISED:
REVISED:
REVISED:
PHASE: 100% CD

SHEET TITLE
TYPICAL CONCRETE SECTIONS & DETAILS

SHEET NUMBER
S301

shaping the built environment
JQ INFRASTRUCTURE, LLC
300 GLASS STREET, SUITE 201
972.392.7340
DALLAS, TEXAS 75207
JQIENG.COM
TBPE FIRM F-7986
PROJECT NO: 4200119
12/4/2020
STATE OF TEXAS
BRIAN J. ROBERTSON
108844
LICENSED
PROFESSIONAL ENGINEER

C:\Users\brobertson\Documents\4200119-Struct-19_Brobertson.JQ.rvt

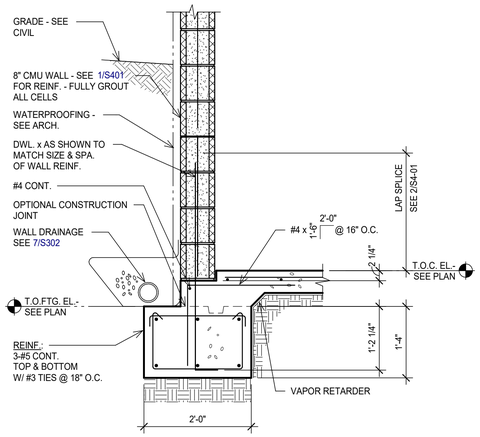

1 TYPICAL PERIMETER FOOTING SECTION
SCALE: 3/4" = 1'-0"

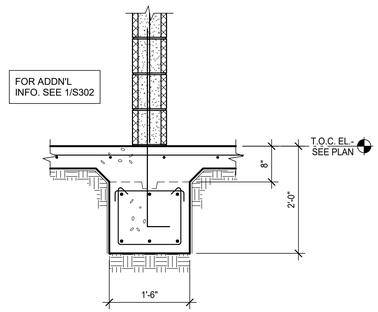

2 TYPICAL INTERIOR FOOTING SECTION
SCALE: 3/4" = 1'-0"

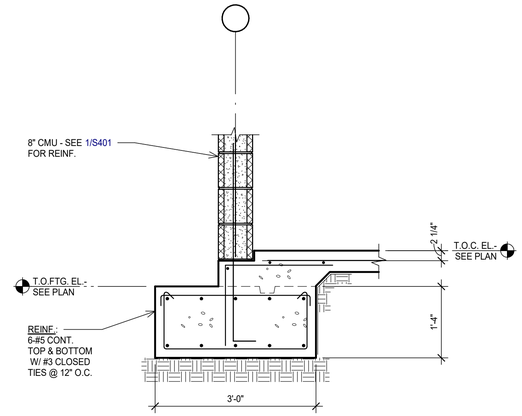

3 PERIMETER FOOTING SECTION
SCALE: 3/4" = 1'-0"

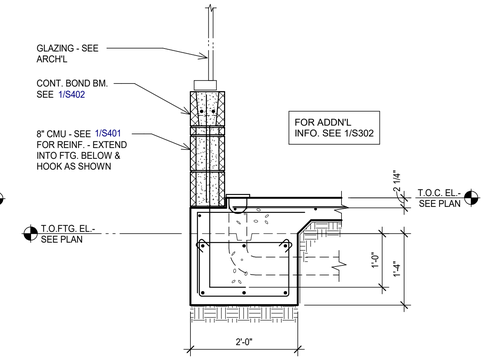

4 PERIMETER FOOTING SECTION
SCALE: 3/4" = 1'-0"

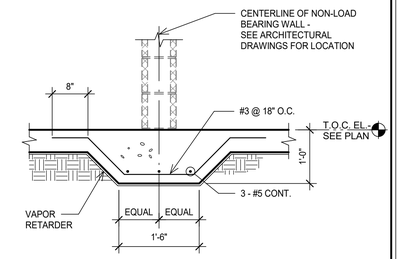

5 TYPICAL SLAB-ON-GRADE STIFFENER BEAM DETAIL
NO SCALE

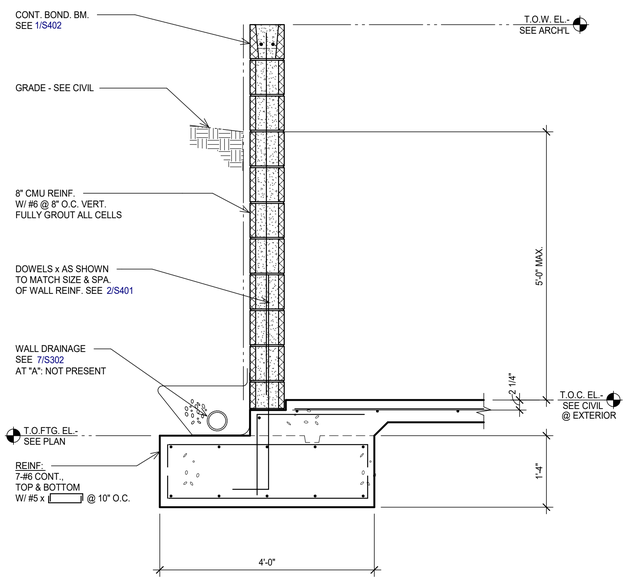

6,6A MECH'L YARD SECTION
SCALE: 3/4" = 1'-0"

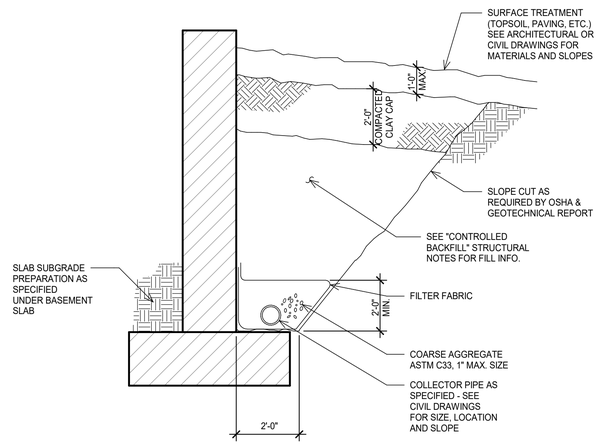

7 TYPICAL BACKFILL DETAIL
NO SCALE

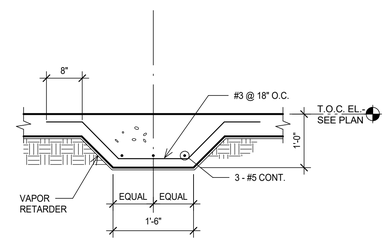

8 TYPICAL SLAB-ON-GRADE STIFFENER BEAM W/O CMU DETAIL
NO SCALE

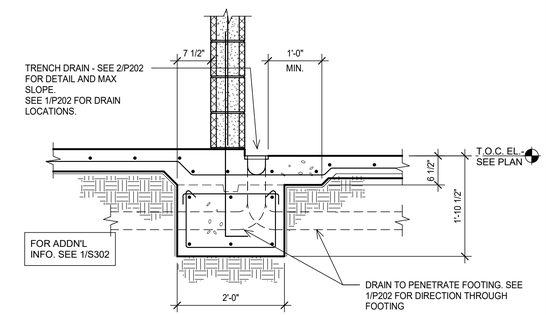

9 SECTION
SCALE: 3/4" = 1'-0"

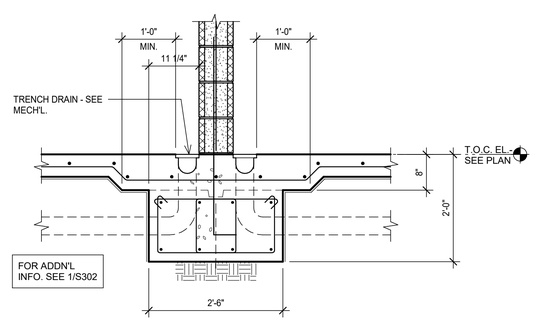

10 SECTION
SCALE: 3/4" = 1'-0"

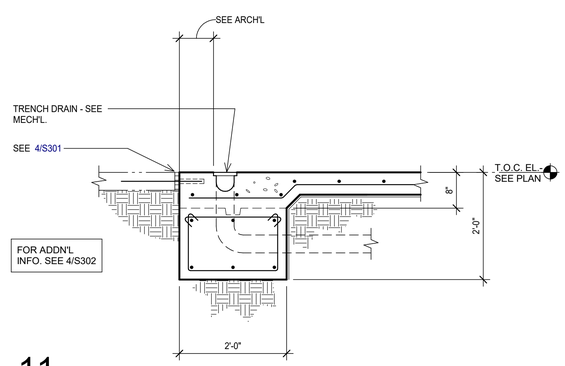

11 SECTION AT ENTRANCE
SCALE: 3/4" = 1'-0"

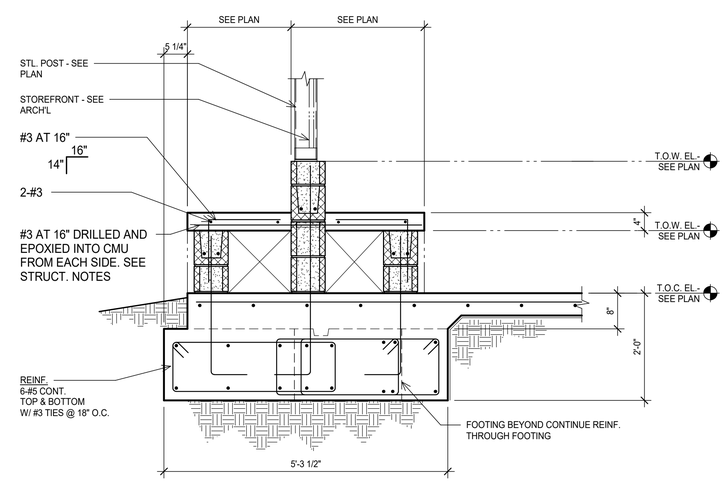

12 SECTION AT ENTRANCE
SCALE: 3/4" = 1'-0"

TEXAS PARKS & WILDLIFE

RICHTER ARCHITECTS

LAKE CORPUS CHRISTI STATE PARK
RESTROOM REPLACEMENT
PROJECT NUMBER 1210196A

DATE: 12-4-2020
DESIGNED BY: JQ
DRAWN BY: JQ
REVIEWED BY: JQ
REVISED:
REVISED:
REVISED:
PHASE: 100% CD

SHEET TITLE
CONCRETE SECTIONS & DETAILS

SHEET NUMBER
S302

shaping the built environment
JQ Infrastructure
JQ INFRASTRUCTURE, LLC
100 GLASS STREET, SUITE 201
972.392.7340
DALLAS, TEXAS 75207
JQIENG.COM
PROJECT NO: 4200119
TBPE FIRM F-7986
12/4/2020
STATE OF TEXAS
BRIAN J. ROBERTSON
108844
LICENSED
PROFESSIONAL ENGINEER

C:\Users\broberton\Documents\4200119-Struct-19_BrobertsonJQ.rvt

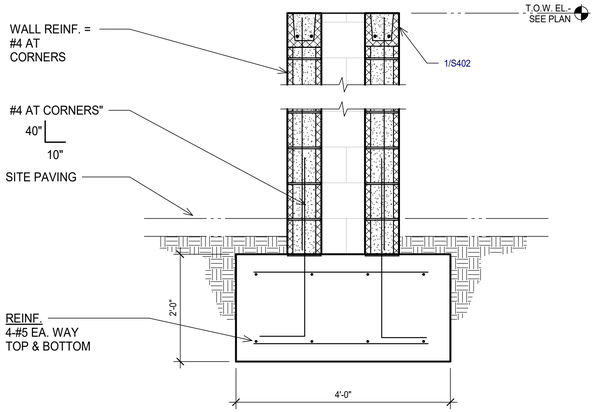

1 SECTION
SCALE: 3/4" = 1'-0"

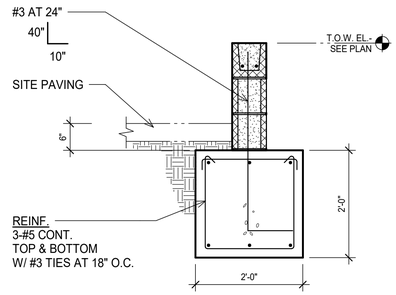

2 SECTION
SCALE: 3/4" = 1'-0"

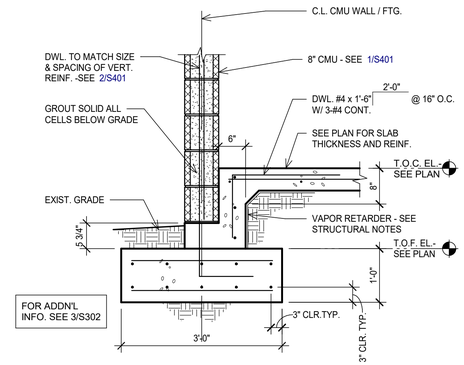

3 PERIMETER SECTION
SCALE: 3/4" = 1'-0"

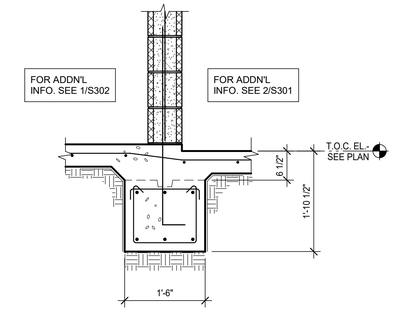

4 TYPICAL INTERIOR FOOTING SECTION
SCALE: 3/4" = 1'-0"

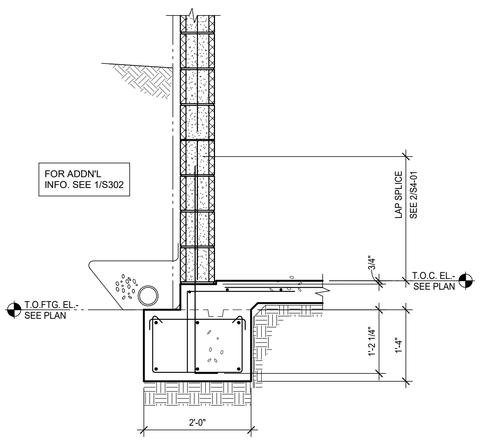

5 TYPICAL PERIMETER FOOTING SECTION
SCALE: 3/4" = 1'-0"

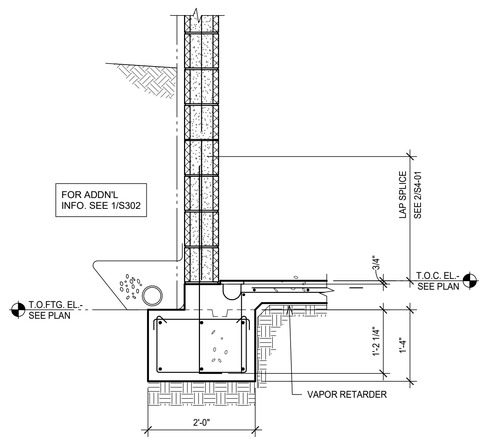

6 TYPICAL PERIMETER FOOTING SECTION
SCALE: 3/4" = 1'-0"

TEXAS PARKS & WILDLIFE

RICHTER ARCHITECTS

LAKE CORPUS CHRISTI STATE PARK
RESTROOM REPLACEMENT
PROJECT NUMBER 1210196A

DATE: 12-4-2020
DESIGNED BY: JQ
DRAWN BY: JQ
REVIEWED BY: JQ
REVISED:
REVISED:
REVISED:
PHASE: 100% CD

SHEET TITLE
CONCRETE SECTIONS & DETAILS

SHEET NUMBER
S303

shaping the built environment
JQ INFRASTRUCTURE, LLC
300 GLASS STREET, SUITE 201
972.392.7340
DALLAS, TEXAS 75207
JQIENG.COM
TBPE FIRM F-7986
PROJECT NO: 4200119

12/4/2020
STATE OF TEXAS
BRIAN J. ROBERTSON
108844
LICENSED
PROFESSIONAL ENGINEER

C:\Users\brobertson\Documents\4200119-Struct-19_Brobertson.JQ.rvt

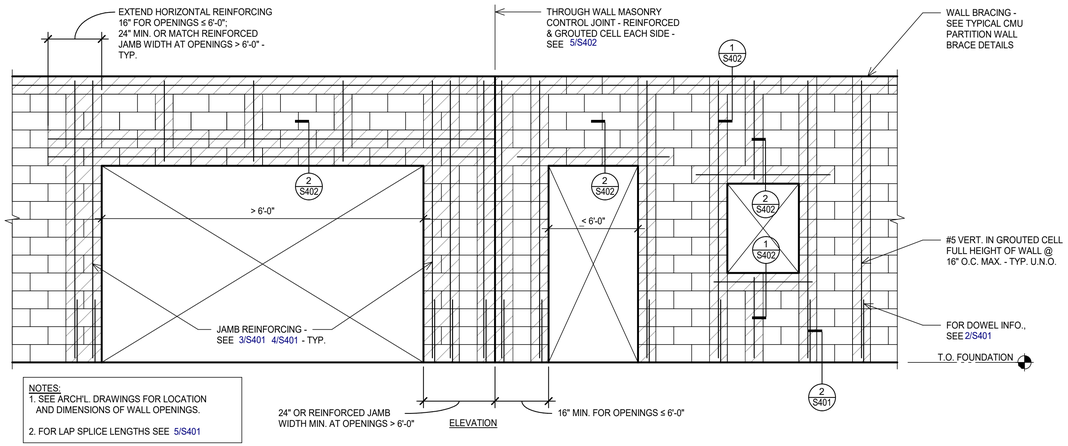

NOTES:
1. SEE ARCH'L. DRAWINGS FOR LOCATION AND DIMENSIONS OF WALL OPENINGS.
2. FOR LAP SPLICE LENGTHS SEE 5/S401

1 TYPICAL CMU PARTITION WALL REINFORCING DETAIL
NO SCALE

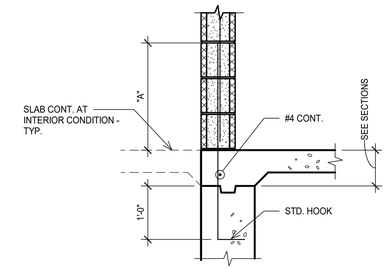

CAST-IN-PLACE (HOOKED BAR)

NOTES:
1. AT WALLS WITH DOUBLE REINFORCING, PROVIDE SINGLE DOWEL AT SIZE AND SPACING OF SCHEDULED WALL REINFORCING. CENTER DOWEL ON WALL, U.N.O.
2. MASONRY DOWELS SHALL BE TIED IN OR DRILLED AND ADHERED. MASONRY DOWELS SHALL NOT BE "STABBED" IN.
3. HOLES FOR MASONRY DOWELS MUST BE CLEANED WITH A WIRE BRUSH AND COMPRESSED AIR. FOLLOW MANUFACTURER'S INSTALLATION INSTRUCTIONS.

DOWEL SIZE	DIMENSION "A"
#4	2'-6"
#5	3'-2"
#6	3'-9"
#7	4'-5"

2 TYPICAL MASONRY WALL DOWEL DETAIL
NO SCALE

NOTES
1. a. FOR OPENING AT EXTERIOR WALL, EXTEND JAMB REINFORCING TO TOP OF WALL.
   b. FOR OPENING AT INTERIOR WALL ≤ 6'-0", TERMINATE JAMB REINFORCING AT TOP OF LINTEL.
2. FOR TYPE 2 OPENINGS, LINTEL SHALL SPAN ACROSS BOTH OPENINGS. INTERMEDIATE CMU WALL BETWEEN OPENINGS SHALL BE EQUIVALENT OF COMBINED JAMB REINFORCING FROM EACH OPENING..
3. FOR REINFORCING DETAIL AT JAMB CONDITIONS SEE 4/S402

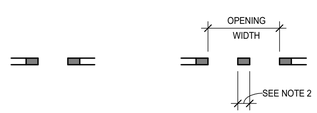

TYPE-1 OPENING TYPE-2 OPENING

PLAN
NO SCALE

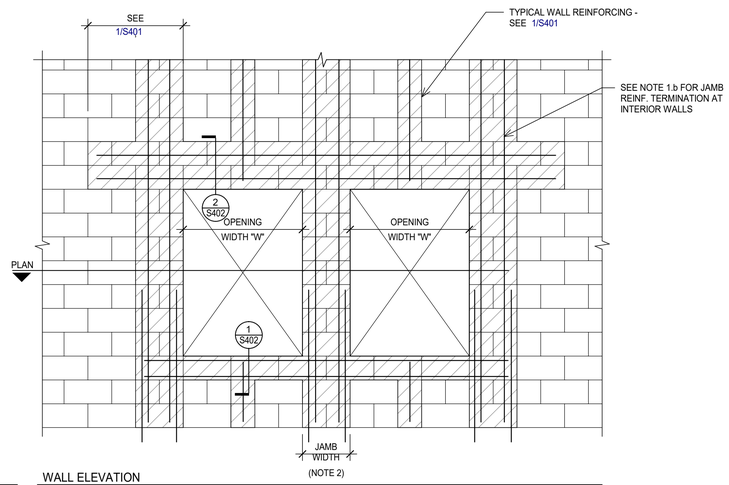

WALL ELEVATION
NO SCALE

NOTES
1. a. FOR OPENING AT EXTERIOR WALL, EXTEND JAMB REINFORCING TO TOP OF WALL.
   b. FOR OPENING AT INTERIOR WALL ≤ 6'-0", TERMINATE JAMB REINFORCING AT TOP OF LINTEL.
2. FOR REINFORCING DETAIL AT JAMB CONDITIONS SEE 4/S402

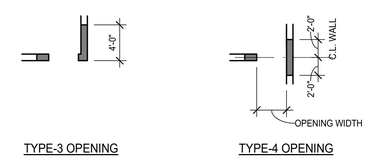

TYPE-3 OPENING TYPE-4 OPENING

PLAN
NO SCALE

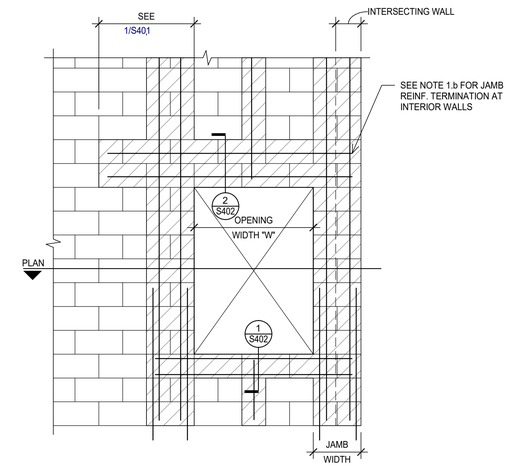

WALL ELEVATION
NO SCALE

JAMB WIDTH & REINFORCING SCHEDULE

WALL HEIGHT BETWEEN SUPPORTS *	CLEAR OPENING SIZE (W)				
	< 8'-0"	<10'-0"	<12'-0"	<14'-0"	<16'-8"
≤10'-0"	8" / 2-#5	8" / 2-#5	8" / 2-#5	8" / 2-#5	16" / 4-#6
≤12'-0"	8" / 2-#5	8" / 2-#5	8" / 2-#6	16" / 4-#6	16" / 4-#6
≤14'-0"	8" / 2-#6	8" / 2-#7	16" / 4-#5	16" / 4-#6	24" / 6-#6
≤16'-0"	16" / 4-#6	16" / 4-#6	16" / 4-#6	16" / 4-#7	24" / 6-#7
≤18'-0"	16" / 4-#6	16" / 4-#6	24" / 6-#6	24" / 6-#7	32" / 8-#7

* SUPPORTS ARE DEFINED AS FLOORS, ROOFS, GIRTS, ETC. THAT ARE CONNECTED TO THE WALL WHICH BRACE THE WALL OUT OF PLANE.

3 CMU WALL JAMB REINFORCING DETAIL
NO SCALE

JAMB WIDTH & REINFORCING SCHEDULE

WALL HEIGHT BETWEEN SUPPORTS *	CLEAR OPENING SIZE (W)				
	< 8'-0"	<10'-0"	<12'-0"	<14'-0"	<16'-8"
≤10'-0"	8" / 2-#5	8" / 2-#5	8" / 2-#5	8" / 2-#5	16" / 4-#6
≤12'-0"	8" / 2-#5	8" / 2-#5	8" / 2-#6	16" / 4-#6	16" / 4-#6
≤14'-0"	8" / 2-#6	8" / 2-#7	16" / 4-#5	16" / 4-#6	24" / 6-#6
≤16'-0"	16" / 4-#6	16" / 4-#6	16" / 4-#6	16" / 4-#7	24" / 6-#7
≤18'-0"	16" / 4-#6	16" / 4-#6	24" / 6-#6	24" / 6-#7	32" / 8-#7

* SUPPORTS ARE DEFINED AS FLOORS, ROOFS, GIRTS, ETC. THAT ARE CONNECTED TO THE WALL WHICH BRACE THE WALL OUT OF PLANE.

4 CMU WALL JAMB REINFORCING DETAIL - CORNER & TEE-CONDITIONS
NO SCALE

CMU WALL LAP SPLICE SCHEDULE

BAR SIZE	LAP LENGTH	
	BOND BEAMS	VERTICAL REINF.
#4	1'-8"	2'-6"
#5	2'-1"	3'-2"
#6	2'-6"	3'-9"
#7	2'-11"	4'-5"

NOTES:
1. SPLICES FOR VERTICAL REINF. SHALL BE STAGGERED IN ADJACENT CELLS SO THAT NO MORE THAN 1/2 OF ALL BARS ARE SPLICED AT THE SAME LOCATION.
2. DO NOT SPLICE BARS IN LINTELS.

5 CMU WALL LAP SPLICE SCHEDULE
NO SCALE

TEXAS PARKS & WILDLIFE

RICHTER ARCHITECTS

LAKE CORPUS CHRISTI STATE PARK
RESTROOM REPLACEMENT
PROJECT NUMBER 1210196A

DATE: 12-4-2020
DESIGNED BY: JQ
DRAWN BY: JQ
REVIEWED BY: JQ
REVISED:
REVISED:
REVISED:
PHASE: 100% CD

SHEET TITLE
TYPICAL MASONRY SECTIONS & DETAILS

SHEET NUMBER
S401

shaping the built environment
JQ Infrastructure
JQ INFRASTRUCTURE, LLC
100 GLASS STREET, SUITE 201
972.392.7340
DALLAS, TEXAS 75207
JQENG.COM
PROJECT NO: 4200119
TBPE FIRM F-7986
12/4/2020
STATE OF TEXAS
BRIAN J. ROBERTSON
108844
LICENSED PROFESSIONAL ENGINEER

C:\Users\brobertson\Documents\4200119-Struct-19_Brobertson\Q.rvt

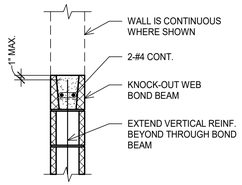

1 TYPICAL CMU BOND BEAM DETAIL
NO SCALE

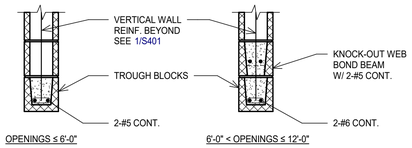

NOTES:

1. LINTELS SHALL REMAIN SHORED UNTIL MASONRY CONSTRUCTION ABOVE HAS CURED FOR A MINIMUM OF 14 DAYS.
2. SEE ARCHITECTURAL DRAWINGS FOR OPENING SIZE AND LOCATION.
3. VERTICAL CONTROL JOINTS SHALL NOT CROSS LINTEL REINFORCING.

2 TYPICAL CMU LINTEL DETAIL
NO SCALE

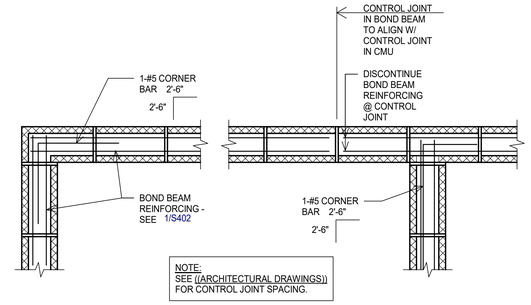

3 TYPICAL CORNER BARS AT BOND BEAMS DETAIL
NO SCALE

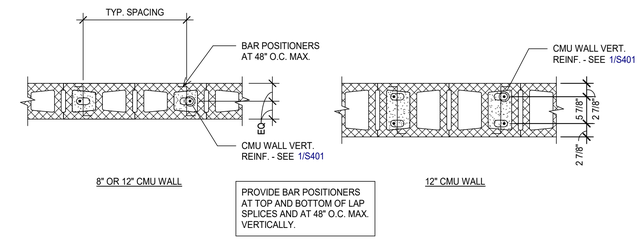

4 TYPICAL CMU BAR PLACEMENT DETAIL
NO SCALE

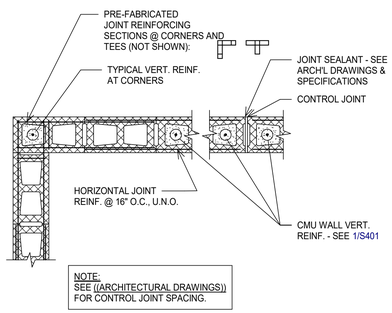

PLAN

5 TYPICAL CMU BAR PLACEMENT DETAIL
NO SCALE

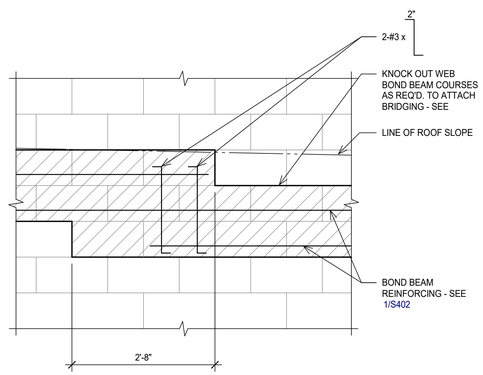

ELEVATION

6 TYPICAL STEP IN BOND BEAM DETAIL
NO SCALE

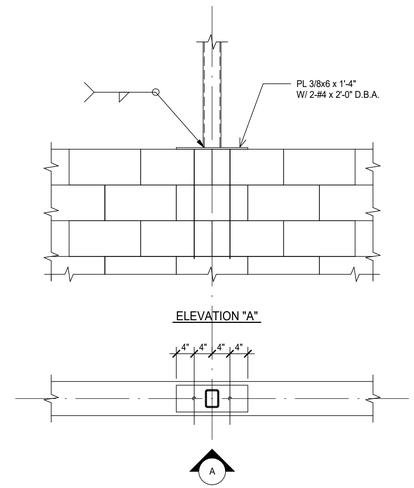

7 DETAIL
SCALE: 3/4" = 1'-0"

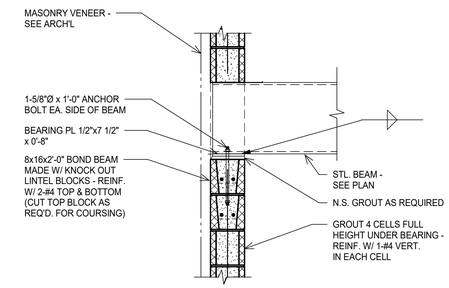

8 TYPICAL MASONRY WALL BEARING BEAM DETAIL
SCALE: 3/4" = 1'-0"

TEXAS PARKS & WILDLIFE

RICHTER ARCHITECTS

LAKE CORPUS CHRISTI STATE PARK
RESTROOM REPLACEMENT
PROJECT NUMBER 1210196A

DATE: 12-4-2020
DESIGNED BY: JQ
DRAWN BY: JQ
REVIEWED BY: JQ
REVISED:
REVISED:
REVISED:
PHASE: 100% CD

SHEET TITLE
TYPICAL MASONRY SECTIONS & DETAILS

SHEET NUMBER
S402

shaping the built environment

JQ INFRASTRUCTURE, LLC
100 GLASS STREET, SUITE 201
972.392.7340
DALLAS, TEXAS 75207
JQIENG.COM
PROJECT NO: 4200119
TBPE FIRM F-7986

12/4/2020
STATE OF TEXAS
BRIAN J. ROBERTSON
108844
LICENSED
PROFESSIONAL ENGINEER

C:\Users\brobertson\Documents\4200119-Struct-19_BrobertsonJQ.rvt

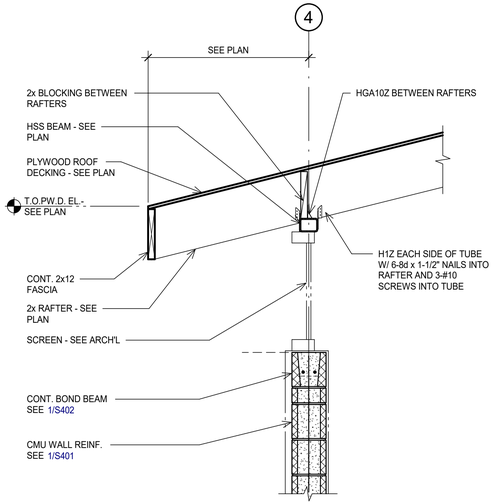

1 PERIMETER SECTION
SCALE: 3/4" = 1'-0"

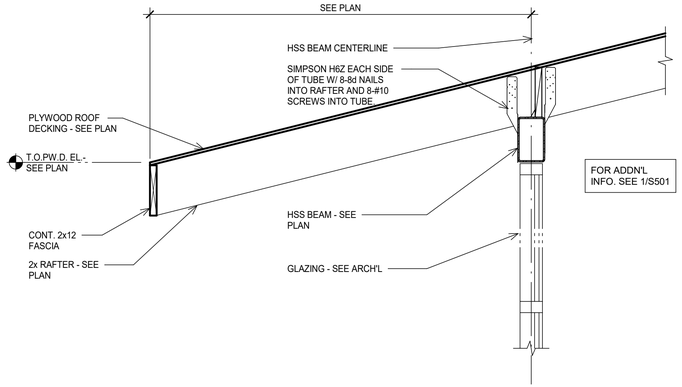

2 PERIMETER SECTION
SCALE: 3/4" = 1'-0"

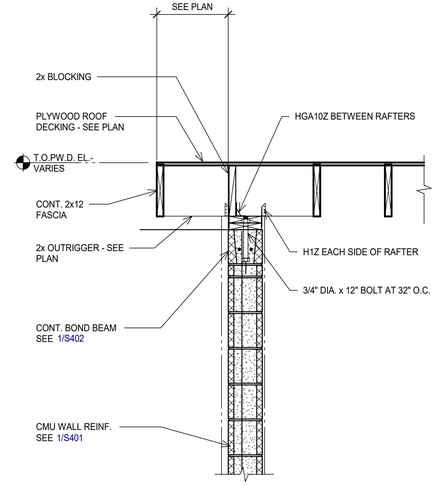

3 PERIMETER SECTION
SCALE: 3/4" = 1'-0"

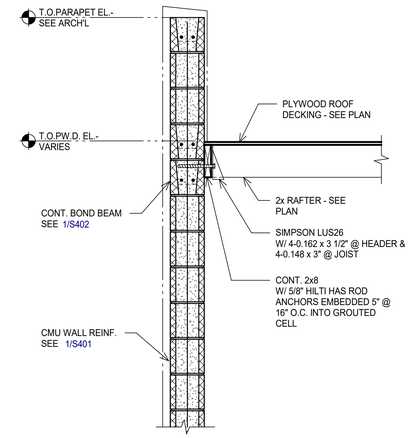

4 PERIMETER SECTION
SCALE: 3/4" = 1'-0"

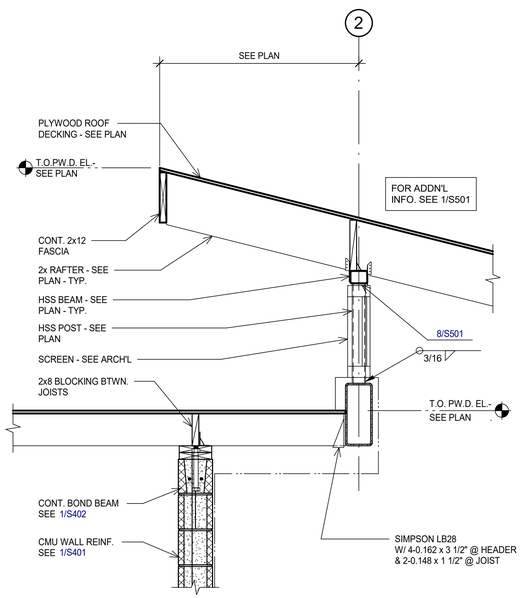

5 SECTION AT ROOF OFFSET
SCALE: 3/4" = 1'-0"

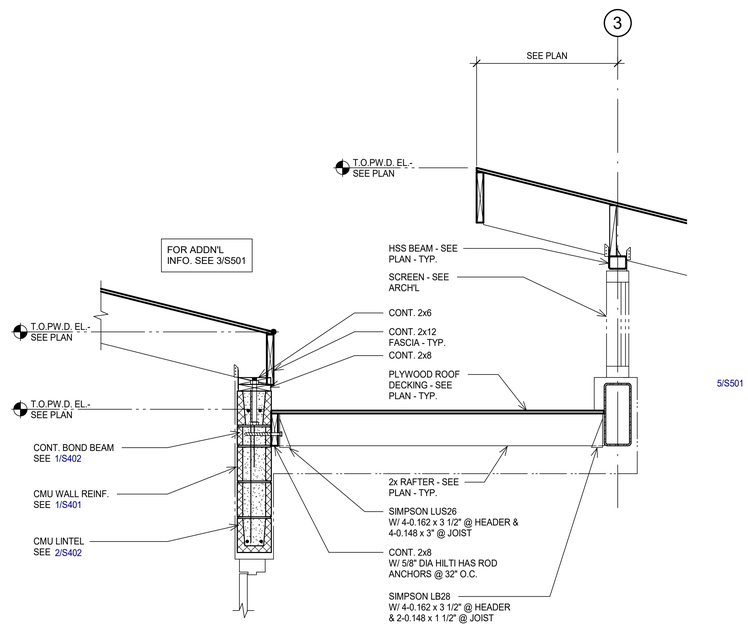

6 SECTION AT ROOF OFFSET
SCALE: 3/4" = 1'-0"

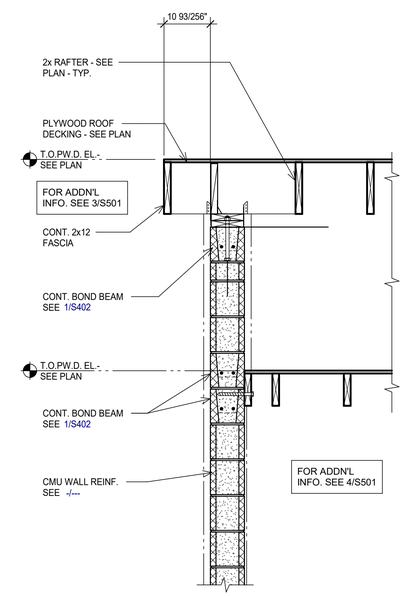

7 SECTION
SCALE: 3/4" = 1'-0"

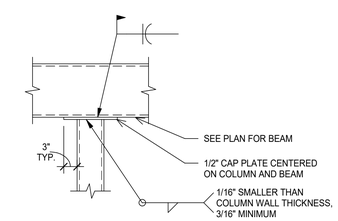

NOTES:

1. SEE ROOF PLAN FOR ROOF SLOPE. SLOPE CAP PLATES ACCORDINGLY.

8 TYPICAL CAP PLATE DETAIL
SCALE: 3/4" = 1'-0"

TEXAS PARKS & WILDLIFE

RICHTER ARCHITECTS

LAKE CORPUS CHRISTI STATE PARK
RESTROOM REPLACEMENT
PROJECT NUMBER 1210196A

DATE: 12-4-2020
DESIGNED BY: JQ
DRAWN BY: JQ
REVIEWED BY: JQ
REVISED:
REVISED:
REVISED:
PHASE: 100% CD

SHEET TITLE
STEEL SECTIONS & DETAILS

SHEET NUMBER
S501

shaping the built environment
JQ Infrastructure
JQ INFRASTRUCTURE, LLC
100 GLASS STREET, SUITE 201
972.392.7340
DALLAS, TEXAS 75207
JQIENG.COM
PROJECT NO: 4200119
TBPE FIRM F-7986
12/4/2020
STATE OF TEXAS
BRIAN J. ROBERTSON
108844
LICENSED
PROFESSIONAL ENGINEER

C:\Users\brobertson\Documents\4200119-Struct-19_BrobertsonJQ.rvt

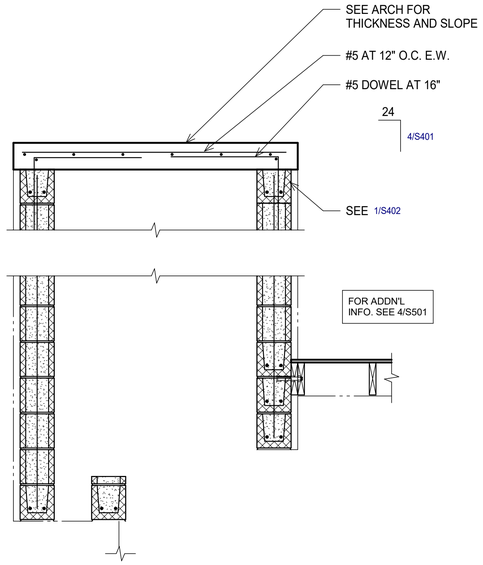

1 SECTION
SCALE: 3/4" = 1'-0"

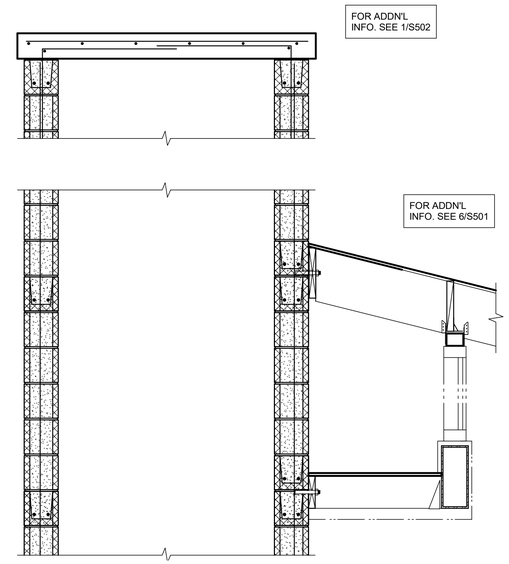

2 SECTION
SCALE: 3/4" = 1'-0"

TEXAS PARKS & WILDLIFE

RICHTER ARCHITECTS

LAKE CORPUS CHRISTI STATE PARK
RESTROOM REPLACEMENT
PROJECT NUMBER 1210196A

DATE: 12-4-2020
DESIGNED BY: JQ
DRAWN BY: JQ
REVIEWED BY: JQ
REVISED:
REVISED:
REVISED:
PHASE: 100% CD

SHEET TITLE
ROOF SECTIONS & DETAILS

SHEET NUMBER
S502

shaping the built environment

JQ INFRASTRUCTURE, LLC
100 GLASS STREET, SUITE 201
972.392.7340
DALLAS, TEXAS 75207
JQIENG.COM
TBPE FIRM F-7986

PROJECT NO: 4200119

12/4/2020
STATE OF TEXAS
BRIAN J. ROBERTSON
108844
LICENSED
PROFESSIONAL ENGINEER

C:\Users\brobertson\Documents\4200119-Struct-19_BrobertsonJQ.rvt

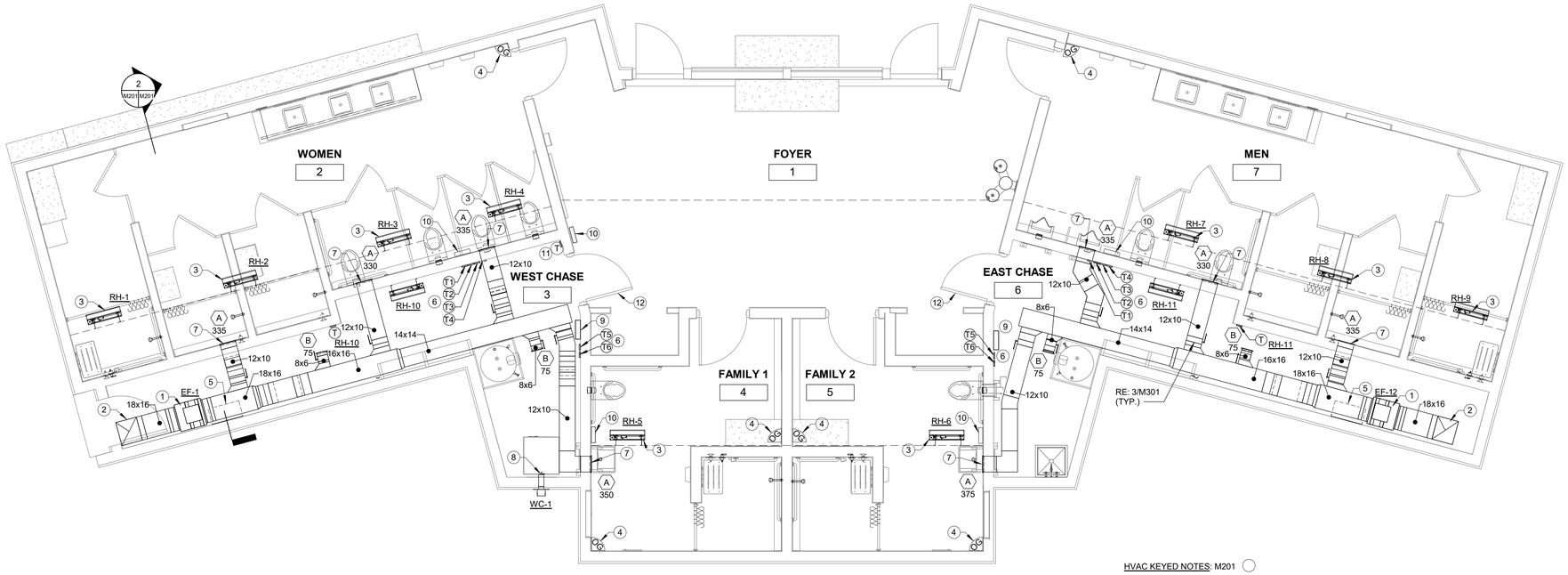

1 HVAC PLAN
1/4" = 1'-0"

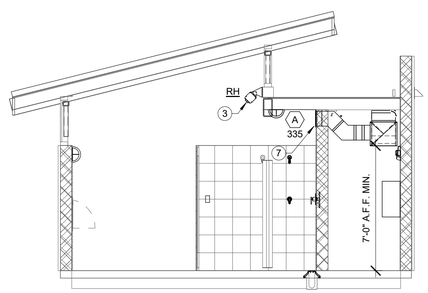

2 HVAC SECTION
1/4" = 1'-0"

HVAC KEYED NOTES: M201

1. INLINE EXHAUST FAN WITH TWO SPEED FAN MOTOR OPERATION SUSPENDED FROM STRUCTURE.
2. DUCT RISER IN STACK. SUPPORT DUCT TO WALL WITH HOT DIPPED GALVANIZED ANGLE IRON AND UNISTRUT. SECURE DUCT TO 1 1/2" X 1 1 1/2" X 1/4" ANGLE IRON WITH SHEET METAL SCREWS. SECURE UNISTRUT TO WALL WITH LAG BOLTS. SECURE ANGLE TO UNIT STRUT WITH BOLTS, DOUBLE NUTS AND WASHERS. REFER TO ARCHITECTURAL DETAIL 10/A501 FOR DUCT OUTLET CONFIGURATION.
3. ELECTRIC RADIANT HEATER (RH) BRACKET MOUNTED TO WALL. (TYPICAL)
4. OCCUPANCY SENSOR BY ELECTRICAL CONTRACTOR.
5. FAN SPEED CONTROLLER PANEL. COORDINATE LOCATION AND INSTALLATION WITH ELECTRICAL CONTRACTOR PRIOR TO CONSTRUCTION.
6. THERMOSTATS. REFER TO ELECTRICAL DRAWING E301 FOR THERMOSTAT SCHEMATICS.
7. SIDEWALL EXHAUST AIR GRILLE. COORDINATE LOCATIONS AND PLACEMENT IN TILE WALL WITH ARCHITECT AND GENERAL CONTRACTOR PRIOR TO CONSTRUCTION.
8. 4" ROUND RIGID METAL DRYER VENT TO DRYER VENT CAP ON EXTERIOR WALL.PROVIDE DUCT FITTINGS AND OFFSET AS REQUIRED TO INSTALL VENT CAP A MINIMUM OF 5" ABOVE ADJACENT GRADE. GRADE IS APPROXIMATELY 48" ABOVE FINISHED FLOOR. COORDINATE EQUIPMENT CONNECTION LOCATION WITH ACTUAL DRYER TO BE PROVIDED BY OWNER. CENTER VENT CAP IN WALL TILE, COORDINATE EXACT LOCATION WITH GENERAL CONTRACTOR AND ARCHITECT PRIOR TO CONSTRUCTION.
9. ELECTRICAL PANEL.
10. THERMOSTAT SENSOR PROBE LOCATION. PROVIDE SENSOR MOUNTING CLIPS SECURED TO WALL. PROVIDE PERFORATED STAINLESS STEEL PROTECTIVE COVER. REFER TO DETAIL 5/M301.
11. PROVIDE THERMOSTAT CONTROLLER FOR FOYER CEILING FANS.
12. GENERAL CONTRACTOR TO PROVIDE UNDERCUT DOOR.

LEGEND

(T) THERMOSTAT

OCCUPANCY SENSOR

CONTROLS/SEQUENCE OF OPERATION

REFER TO ELECTRICAL SHEET E301 FOR THERMOSTAT SCHEMATICS.

REFER TO SPECIFICATIONS 23 09 23 EQUIPMENT CONTROLS COORDINATION AND 23 09 93 EQUIPMENT SEQUENCE OF OPERATIONS FOR ADDITIONAL REQUIREMENTS.

EXHAUST FANS:
FANS SHALL HAVE TWO SPEED FAN OPERATION AND SHALL BE CONTROLLED BY OCCUPANCY SENSORS AND THERMOSTATS. OCCUPANCY SENSORS IN MEN'S, WOMEN'S AND FAMILY RESTROOMS SHALL ENERGIZE RESPECTIVE T1 THERMOSTAT. THERMOSTAT SHALL ENABLE STAGE 1 MINIMUM FAN SPEED OPERATION. THERMOSTAT T1 SHALL ENABLE STAGE 2 MAXIMUM SPEED OPERATION WHEN SPACE TEMPERATURE RISES ABOVE SET POINT, 80 DEG. F. (ADJ.). FAMILY RESTROOMS WILL HAVE STAGE 1 DIRECT FAN CONTROL BASED ON OCCUPANCY ONLY. STAGE 2 FAN OPERATION WILL BE CONTROLLED BY SPACE TEMPERATURE MEASURED IN RESPECTIVE MEN'S OR WOMEN'S RESTROOM.

HEATERS:
HEATERS SHALL BE CONTROLLED BY OCCUPANCY SENSORS AND THERMOSTATS. OCCUPANCY SENSORS IN MEN'S, WOMEN'S AND FAMILY RESTROOMS SHALL ENABLE RESPECTIVE THERMOSTAT T3. THERMOSTAT T3 SHALL ENABLE HEATERS WHEN SPACE TEMPERATURE DROPS BELOW 68 DEG. (ADJ.) SET POINT. THERMOSTAT T4 SHALL BYPASS OCCUPANCY SENSOR AND ENERGIZE HEATERS WHEN SPACE TEMPERATURE DROPS BELOW MINIMUM TEMPERATURE SET POINT 38 DEG. F. (ADJ.).

STATE OF TEXAS
R. DAVID MORALES
108769
LICENSED
PROFESSIONAL ENGINEER
12/04/2020

STRIDDE, CALLINS & ASSOCIATES INC.
CONSULTING ENGINEERS
MECHANICAL ELECTRICAL
(361) 883-9199
Fax (361) 883-9177
342 S. Navigation Blvd.
Corpus Christi, TX 78405-3618
Registration # F-006328

TEXAS PARKS & WILDLIFE

RICHTER ARCHITECTS

LAKE CORPUS CHRISTI STATE PARK
RESTROOM REPLACEMENT
PROJECT NUMBER 1210196A

DATE: 12-04-2020
DESIGNED BY: D.M.
DRAWN BY: D.M.
REVIEWED BY: D.M.
REVISED:
REVISED:
REVISED:
PHASE: 100% CONSTRUCTION DOCUMENTS

SHEET TITLE
HVAC PLAN

SHEET NUMBER
M201

MECHANICAL GENERAL NOTES

1. THESE GENERAL NOTES APPLY TO ALL HVAC DRAWINGS.
2. DUCT SIZES ARE INSIDE CLEAR DIMENSIONS.
3. PROVIDE FLEXIBLE CONNECTION AT DUCT ATTACHMENTS TO EQUIPMENT.
4. HVAC EQUIPMENT SUBMITTED OTHER THAN SCHEDULED MANUFACTURER'S SHALL NOT EXCEED PHYSICAL DIMENSIONS DUE TO SPACE LIMITATIONS.
5. ALL DUCTWORK PENETRATIONS OF FIRE-RATED BARRIERS SHALL BE PROTECTED WITH FIRE BLOCKING MATERIAL PER SPECIFICATIONS.
6. MANUAL VOLUME DAMPERS INSTALLED IN RECTANGULAR DUCTWORK SHALL BE OPPOSED BLADE TYPE.
7. CONTRACTOR SHALL VISIT THE SITE PRIOR TO SUBMITTING A BID AND DETERMINE ALL EXISTING CONDITIONS WHICH MAY AFFECT HIS WORK. ANY CONDITIONS RESULTING IN ADDITIONAL WORK ARISING AFTER AWARD OF CONTRACT AND START OF CONSTRUCTION WHICH COULD HAVE BEEN AVOIDED AND/OR RESOLVED HAD THE CONTRACTOR VISITED THE SITE AND OBSERVED EXISTING CONDITIONS SHALL BE PERFORMED BY THE CONTRACTOR AT NO ADDITIONAL COST TO OWNER.
8. IT IS THE INTENT OF THESE CONTRACT DOCUMENTS TO PROVIDE COMPLETE, PROPERLY ADJUSTED AND OPERABLE MECHANICAL SYSTEMS. PROVIDE ALL NECESSARY SUPERVISION, COORDINATION, LABOR, MATERIALS, EQUIPMENT, FIXTURES, DRAYAGE, HOISTING, TOOLS, MACHINERY AND CONNECTIONS TO UTILITIES FOR THE INSTALLATION OF COMPLETE AND OPERABLE MECHANICAL SYSTEMS. IF DETAILS OR SPECIAL CONDITIONS ARE REQUIRED IN ADDITION TO THOSE SHOWN ON DRAWINGS, PROVIDE ALL MATERIAL AND EQUIPMENT REQUIRED TO COMPLETE THEIR INSTALLATION, WHETHER NOTED IN PLANS OR NOT.
9. MECHANICAL AND ELECTRICAL CONTRACTORS SHALL COORDINATE TO ENSURE CORRECT ELECTRICAL SERVICE TO MECHANICAL EQUIPMENT. COORDINATION SHALL PRECEDE PURCHASE OF EQUIPMENT. IMMEDIATELY REPORT ALL DISCREPANCIES TO THE OWNER'S REPRESENTATIVE. ALL DISCREPANCIES FOUND AFTER THE PURCHASE OR INSTALLATION OF EQUIPMENT SHALL BE REMEDIED BY THE CONTRACTOR AT NO COST TO THE OWNER OR DESIGN PROFESSIONALS.
10. CONTRACTOR SHALL MAKE HIMSELF FAMILIAR WITH OTHER TRADES WHICH DIRECTLY AFFECT CONTRACTOR'S SCOPE OF WORK.
11. ALL HOLES IN CONCRETE, MASONRY, AND PLASTER SHALL BE CORE DRILLED WHEN POSSIBLE. VERIFY STRUCTURE BEFORE DRILLING. DO NOT CUT STRUCTURE OR STRUCTURAL REINFORCEMENT. IMMEDIATELY REPORT ANY DAMAGE CAUSED BY DRILLING TO THE OWNER'S REPRESENTATIVE.
12. ANY DAMAGE TO BUILDING STRUCTURE SHALL BE PATCHED TO THE COMPLETE SATISFACTION OF THE OWNER'S REPRESENTATIVE.
13. CONTRACT DRAWINGS ARE DIAGRAMMATIC IN NATURE. FIELD VERIFY EXACT DIMENSIONS AND LOCATIONS OF WALLS, DOORS, AND OTHER BUILDING STRUCTURE FROM FIELD MEASUREMENTS AND LOCATE EQUIPMENT, DUCTS, PIPING, FIXTURES, ETC., AS REQUIRED AND NECESSARY. IF CHANGES FROM PLANS ARE REQUIRED, PROVIDE SKETCH TO OWNER'S REPRESENTATIVE SHOWING CHANGES FOR APPROVAL. ALTERATIONS TO THE ROUTING OF PIPING, DUCT, ETC., OR LOCATION OF EQUIPMENT, FIXTURES, ETC., SHALL BE WITHOUT COST TO THE OWNER OR DESIGN PROFESSIONALS.
14. ADJUSTMENT OF MECHANICAL EQUIPMENT, DUCT WORK, AND PIPING MAY BE NECESSARY TO FIT FIELD CONDITIONS. COORDINATE WITH ARCHITECTURAL AND STRUCTURAL DRAWINGS AND OTHER TRADES. SUCH WORK SHALL BE COMPLETED AT NO COST TO THE OWNER OR DESIGN PROFESSIONALS.

FAN SCHEDULE

DESIGNATION	CFM	ESP	MAX B.H.P.	EFFICIENCY GRADE	MAX HP	V/P/H	MAX RPM	TYPE	SERVICE	SONES	MANUFACTURER & MODEL NO.	CONTROL	NOTES	WEIGHT (LBS.)	SERVICE AREA
EF-1, EF-2	STAGE 1: 650	0.07	0.31	N/A	0.5	240/1/60	1266	IL	EXHAUST	10.3	LOREN COOK 135SQN17D (VF2)	A	1,2,3,4,5	114	RESTROOMS
	STAGE 2: 1500	0.35													

* MAXIMUM DB AT INLET/OUTLET SOUND POWER dBA

REFER TO SPECIFICATION FOR ALL EQUIPMENT REQUIREMENTS

NOTES:

1. PROVIDE TWO SPEED CONTROLLER, LOREN COOK VF2SC OR EQUAL.
2. PROVIDE FACTORY DISCONNECT.
3. PROVIDE VIBRATION ISOLATION IN HANGER RODS.
4. PROVIDE INSULATED HOUSING.
5. PROVIDE MOTOR CONTROL COVER.

GENERAL NOTES: (APPLICABLE TO ALL FAN'S)

A. MAINTAIN MANUFACTURER'S RECOMMENDED DISTANCES FOR MAINTENANCE.
B. MAINTAIN 10' MINIMUM CLEARANCE BETWEEN OA AND EXHAUST AIR.

TYPE:

IL- IN-LINE CENTRIFUGAL FAN - DIRECT DRIVE

CONTROL:

A- TWO SPEED OPERATION, OCCUPANCY SENSOR AND THERMOSTAT.

AIR DEVICE SCHEDULE

DESIG.	NECK SIZE	TYPE	SERVICE	MOUNTING	MANUFACTURER & REMARKS
A	12"x10"	GRILLE	EXHAUST	SURFACE	TITUS 350RL-SS, 3/4" BLADE SPACING, 45° FIXED DEFLECTION, 316 STAINLESS STEEL CONSTRUCTION, WHITE FINISH
B	8"x6"	GRILLE	EXHAUST	SURFACE	TITUS 350RL-SS, 3/4" BLADE SPACING, 45° FIXED DEFLECTION, 316 STAINLESS STEEL CONSTRUCTION, WHITE FINISH

COORDINATE COLOR AND FINISH WITH ARCHITECT PRIOR TO ORDERING

WALL CAP SCHEDULE

DESIGNATION	FREE AREA (SQ. FT.)	CONNECTION SIZE (INCHES)	TYPE	**MANUFACTURER & MODEL NO.**	**SERVICE AREA**
WC-1	0.05	4" RD.	EXHAUST	SEIHO SFB4	DRYER VENT

NOTES:
1. ALUMINUM CONSTRUCTION
2. ANODIZED FINISH.
3. PROVIDE ALUMINUM BACKDRAFT DAMPER.

CODE REVIEW

ALL WORK SHALL BE INSTALLED PER 2015 INTERNATIONAL MECHANICAL CODE REQUIREMENTS.

ELECTRIC RADIANT HEATER SCHEDULE

DESIGNATION	W	NUMBER OF STAGES	V/P/H	MANUFACTURER & MODEL NO.
RH-1 THROUGH 11	1450	1	120/1/60	TPI CORP FSA-14

NOTES:
1. REFER TO SPECIFICATIONS FOR EQUIPMENT AND CONTROL REQUIREMENTS.
2. PROVIDE FACTORY MOUNTED DISCONNECT.
3. MAINTAIN MANUFACTURER'S RECOMMENDED CLEARANCE TO COMBUSTIBLES.
4. INSTALL AND SUPPORT PER MANUFACTURER'S RECOMMENDATIONS.
5. RH-1 THROUGH 9: PROVIDE 120V THERMOSTAT. REFER TO DETAIL 2 ON ELECTRICAL DRAWING E301 FOR CONTROL SCHEMATIC.
6. RH-10 AND RH-11: PROVIDE 120V THERMOSTAT FOR STAND ALONE OPERATION.

HVAC SYMBOLS AND ABBREVIATIONS

T	THERMOSTAT
OS	OCCUPANCY SENSOR
	FLEXIBLE DUCT CONNECTION
	RECTANGULAR DUCT ELBOW WITH TURNING VANES
	RETURN, EXHAUST, OR O/A DUCT UP
	RETURN, EXHAUST, OR O/A DUCT DOWN
12/10 OR	12 DUCT SIZE, (FIRST OR TOP NO. 10 INDICATES SIDE FACING VIEWER)
R	DUCT RISE IN DIRECTION OF AIR FLOW
D	DUCT DROP IN DIRECTION OF AIR FLOW
	MANUAL MULTI-LEAF VOLUME DAMPER WITH LOCKING QUADRANT
	AIR DEVICE DESIGNATION
EF	EXHAUST FAN
RD	ROUND
RH	RADIANT HEATER
WC	WALL VENT CAP

* THIS IS A GENERAL LEGEND. ALL SYMBOLS AND ABBREVIATIONS MAY NOT APPLY TO THIS PROJECT.

KEYED NOTES : 1/M301

1. ACOUSTICALLY INSULATED IN-LINE FAN HOUSING.
2. HANGER SUPPORT BRACKET. (TYPICAL)
3. CENTRIFUGAL FAN.
4. DIRECT DRIVE FAN MOTOR.
5. SPAN HOT DIPPED GALVANIZED ANGLE FROM BUILDING STEEL STRUCTURE TO SUPPORT FAN SYSTEM AT LOCATIONS INDICATED ON DRAWINGS. SECURE TO STRUCTURE WITH WELDS OR DOUBLE BOLTS AT EACH END. SIZE AS NEEDED TO SUPPORT FINAL INSTALLED WEIGHT OF FAN SYSTEM WITHOUT STRAINING IRON THROUGH SPAN.
6. PROVIDE MINIMUM 3/8" THREADED ROD SUPPORT AT EACH FAN HANGER BRACKET LOCATION. (TYPICAL)
7. PROVIDE VIBRATION ISOLATOR IN HANGER ROD. REFER TO SPECIFICATIONS. (TYPICAL)
8. PROVIDE DOUBLE NUT TOP AND BOTTOM AT EACH CONNECTION OR NYLON LOCK NUT TOP AND REGULAR NUT BOTTOM. (TYPICAL FOR EACH ROD SUPPORT CONNECTION)
9. EC MOTOR CONTROLLER. PROVIDE CONTROLLER WITHIN CONTROLLER COVER OR FAN HOUSING WHERE AVAILABLE. IF LOCATED EXTERNAL TO THE FAN, CONTRACTOR SHALL PROVIDE CONTROLLER IN NEMA-1 CONTROL ENCLOSURE AND SECURE TO FAN HOUSING.
10. ELECTRICAL DISCONNECT SWITCH ON FAN HOUSING.
11. ELECTRICAL CONDUIT WITH CONDUCTORS PROVIDED BY ELECTRICAL CONTRACTOR. (TYPICAL)
12. DUCTWORK. REFER TO DRAWINGS FOR SIZE AND LOCATION.
13. FLEXIBLE DUCT CONNECTION. REFER TO DETAIL 2/M301. (TYPICAL)
14. TRANSITION IN DUCT AS NEEDED TO CONNECT TO FAN DUCT CONNECTION SIZE.
15. DUCT MOUNTED SERVICE ACCESS DOOR.

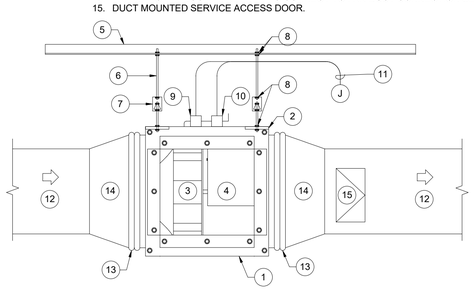

1 DETAIL - EXHAUST FAN
SCALE: NOT TO SCALE

KEYED NOTES: 2/M301

1. FIRE RESISTANT RUBBER IMPREGNATED FABRIC.
2. 1-1/2" POCKET SLIP.
3. DUCT.
4. MINIMUM 20 U.S. GAUGE STEEL.
5. EQUIPMENT OUTLET/ INLET.
6. 1"x1/8" BAND IRON.
7. SHEET METAL SCREWS ON 4" CENTERS.

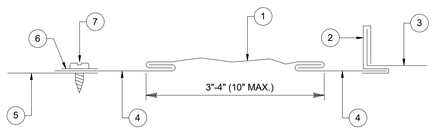

2 DETAIL - FLEXIBLE DUCT CONNECTION
SCALE: NOT TO SCALE

KEYED NOTES: 3/M301

1. MAIN TRUNK DUCT.
2. MANUAL OPPOSED BLADE DAMPER. REFER TO DETAIL 4/M301.
3. BRANCH DUCT.
4. STAND-OFF WITH LOCKING QUADRANT.

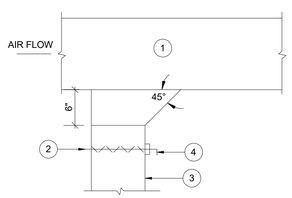

3 DETAIL - BRANCH DUCT CONNECTION
SCALE: NOT TO SCALE

KEYED NOTES : 4/M301

1. ROD POSITIONING NUT HANDLE WITH SET SCREW.
2. ALIGN HANDLE WITH DAMPER BLADE. ENSURE THAT FULL 90° DAMPER BLADE MOVEMENT IS UNOBSTRUCTED.
3. BLADE POSITION LOCKNUT.
4. MINIMUM 2" STAND-OFF BRACKET, BOLT TO DUCT.
5. 3/8" DIA. THREADED ROD.
6. 16 GA. STEEL BLADE.
7. STEEL ANGLE BLADE STOP, BOLT TO DUCT.
8. 1/4" CLEARANCE ALL-AROUND.
9. BEARING FITTING, BOLT TO DUCT, SEAL AIR TIGHT.
10. ENSURE BOLTS CLEAR BLADE, OR INSTALL THEM IN OPPOSING CORNERS AWAY FROM BLADE ROTATION.
11. STEEL CLAMP, BOLT TO BLADE. PROVIDE AN ADDITIONAL ANTI-SLIP BOLT THROUGH THE ROD. (TYPICAL)
12. FOR DUCT HEIGHTS MORE THAN 12", PROVIDE FACTORY-FABRICATED OPPOSED BLADE DAMPERS.

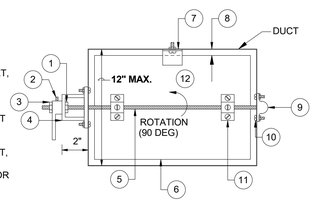

4 DETAIL - MANUAL BALANCING DAMPER
SCALE: NOT TO SCALE

KEYED NOTES : 5/M301

1. TEMPERATURE SENSOR PROBE.
2. RIGID PROBE MOUNTING CLIP, BAPI, INC. OR EQUAL, SECURE TO WALL WITH 316 STAINLESS STEEL FASTENER.
3. MINIMUM 1" SCHEDULE 40 PVC SLEEVE. COORDINATE SLEEVE DIAMATER SIZE REQUIRED WITH EQUIPMENT PROVIDED ON PROJECT. SEAL PENETRATION AROUND SLEEVE AIR TIGHT ON BOTH SIDES OF WALL.
4. RUBBER PASS THROUGH GROMMET, MCMASTER-CARR OR EQUAL, BOTH SIDES OF WALL PENETRATION SLEEVE.
5. ROUTE SENSOR WIRE AND CONNECT TO WALL MOUNTED THERMOSTAT. PROVIDE WIRE WALL CLIP SUPPORTS. (TYPICAL)
6. PERFORATED 316 STAINLESS STEEL COVER. SIZE AND DEPTH AS REQUIRED TO COVER SENSING PROBES.
7. PROVIDE FLANGED BOTTOM AND SECURE COVER TO WALL WITH 316 STAINLESS STEEL TAMPER PROOF FASTENERS. (TYPICAL)

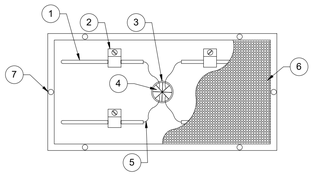

5 DETAIL - TEMPERATURE SENSOR PROBES
SCALE: NOT TO SCALE

TEXAS PARKS & WILDLIFE

RICHTER ARCHITECTS

LAKE CORPUS CHRISTI STATE PARK
RESTROOM REPLACEMENT
PROJECT NUMBER 1210196A

DATE: 12-04-2020
DESIGNED BY: D.M.
DRAWN BY: D.M.
REVIEWED BY: D.M.
REVISED:
REVISED:
REVISED:
PHASE: 100% CONSTRUCTION DOCUMENTS

SHEET TITLE
HVAC SCHEDULES AND DETAILS

SHEET NUMBER
M301

STATE OF TEXAS
R. DAVID MORALES
108769
LICENSED
PROFESSIONAL ENGINEER
12/04/2020

STRIDDE, CALLINS & ASSOCIATES INC.
CONSULTING ENGINEERS
MECHANICAL ELECTRICAL
(361) 883-9199
Fax (361) 883-9[illegible]
342 S. Navigation Blvd
Corpus Christi, TX 78405-3618
Registration # F-006328

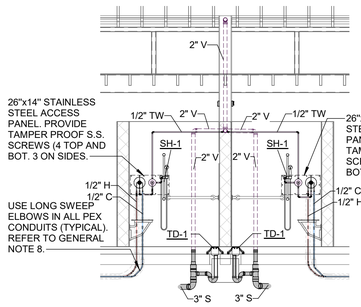

3 PLUMBING SECTION - FAMILY 1 & 2
1/4" = 1'-0"

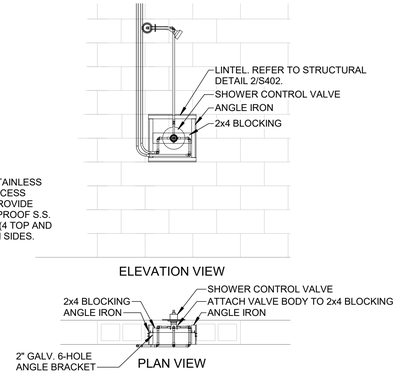

2 SHOWER (SH-2) VALVE BLOCKOUT
1/2" = 1'-0"

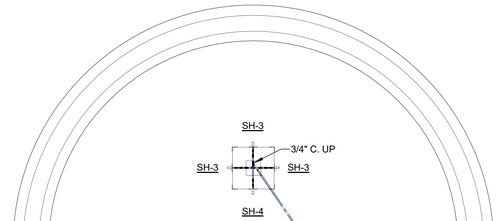

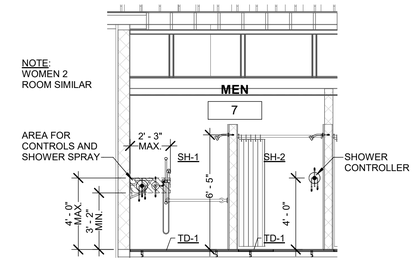

4 PLUMBING SECTION - SHOWER 1 & 2 CONTROL ARRAINGEMENT
1/4" = 1'-0"

PLUMBING GENERAL NOTES

1. FIELD ADJUSTMENT OF PLUMBING EQUIPMENT, FIXTURE AND PIPING MAY BE NECESSARY TO FIT FIELD CONDITIONS. COORDINATE WITH ARCHITECTURAL DRAWINGS AND OTHER TRADES. SUCH WORK SHALL BE COMPLETED AT NO COST TO THE OWNER, ARCHITECT, OR ENGINEER.
2. IN THE EVENT THAT UTILITIES OR SUBSTRUCTURES NOT SHOWN ON THE DRAWINGS ARE ENCOUNTERED, IT SHALL BE CONTRACTOR'S RESPONSIBILITY TO CONSTRUCT THE WORK AS INTENDED AT NO INCREASE IN THE CONTRACT PRICE. ALL DAMAGED OR DISTURBED UTILITIES SHALL BE RECONSTRUCTED TO AS-IS OR BETTER CONDITION BY THE CONTRACTOR AT HIS EXPENSE.
3. FIELD VERIFY EXACT DIMENSIONS AND LOCATIONS OF WALLS, DOORS, GRADE BEAMS, ETC., BEFORE BEGINNING ANY CONSTRUCTION WORK. COORDINATE WITH ARCHITECTURAL PLANS. COORDINATE WITH OTHER TRADES.
4. PROVIDE DECORATIVE TRIM AROUND OPENINGS IN FINISHED AREAS. ESCUTCHEON PLATES SHALL BE CHROME PLATED BRASS.
5. SLOPE ALL DRAIN LINES AS INDICATED. WHERE SLOPE IS NOT INDICATED, USE A SLOPE OF 0.25 INCH PER FOOT. AT NO TIME SHALL SLOPE BE LESS THAN 0.25 INCH PER FOOT UNLESS A CONFLICT EXISTS AND CONTRACTOR CAN VERIFY THAT A MEDIAN FLUID VELOCITY OF 2 FT./SEC. CAN BE ACHIEVED AND MAINTAINED OR IS DIRECTED OTHERWISE BY OWNER'S REPRESENTATIVE.
6. MAKE ALL FINAL CONNECTIONS TO FIXTURES AND EQUIPMENT INCLUDING TRAPS, WATER SERVICE, DRAINS, AND DECORATIVE TRIM. PROVIDE SHUT OFF VALVES AT ALL FIXTURES AND EQUIPMENT. PROVIDE VACUUM BREAKERS WHERE INDICATED AND AS REQUIRED BY GOVERNING AUTHORITIES AND CODE REQUIREMENTS.
7. CERTAIN EQUIPMENT, INDICATED ON DRAWINGS WITH AN ASTERISK (*), IS FURNISHED BY OWNER AND/OR EQUIPMENT SPECIFIED ELSEWHERE, WHICH MAY REQUIRE ROUGH-IN AND FINAL CONNECTIONS BY THE CONTRACTOR. PRIOR TO INSTALLATION OF EQUIPMENT, CONTRACTOR SHALL OBTAIN CERTIFIED SHOP DRAWINGS OF EQUIPMENT. CONTRACTOR SHALL VERIFY THAT THESE PRINTS HAVE BEEN CHECKED BY THE ARCHITECT AND HAVE BEEN APPROVED BY THE ARCHITECT. NO ROUGH-IN SHALL BE DONE BY THE CONTRACTOR UNTIL APPROVED SHOP DRAWINGS ARE OBTAINED.
8. ALL PEX PIPING INSTALLED BELOW SLAB AND/OR WITHIN BLOCK WALL SHALL BE ENCASED WITHIN PVC CONDUIT OF APPROPRIATE SIZE, CONFIGURATION AND LONG SWEEP ELBOWS TO ALLOW FOR EASE OF REPAIRS AND REPLACEMENT.
9 ALL PLUMBING INSTALLATION, FIXTURES AND MATERIALS SHALL COMPLY WITH 2015 INTERNATIONAL PLUMBING AND BUILDING CODE.

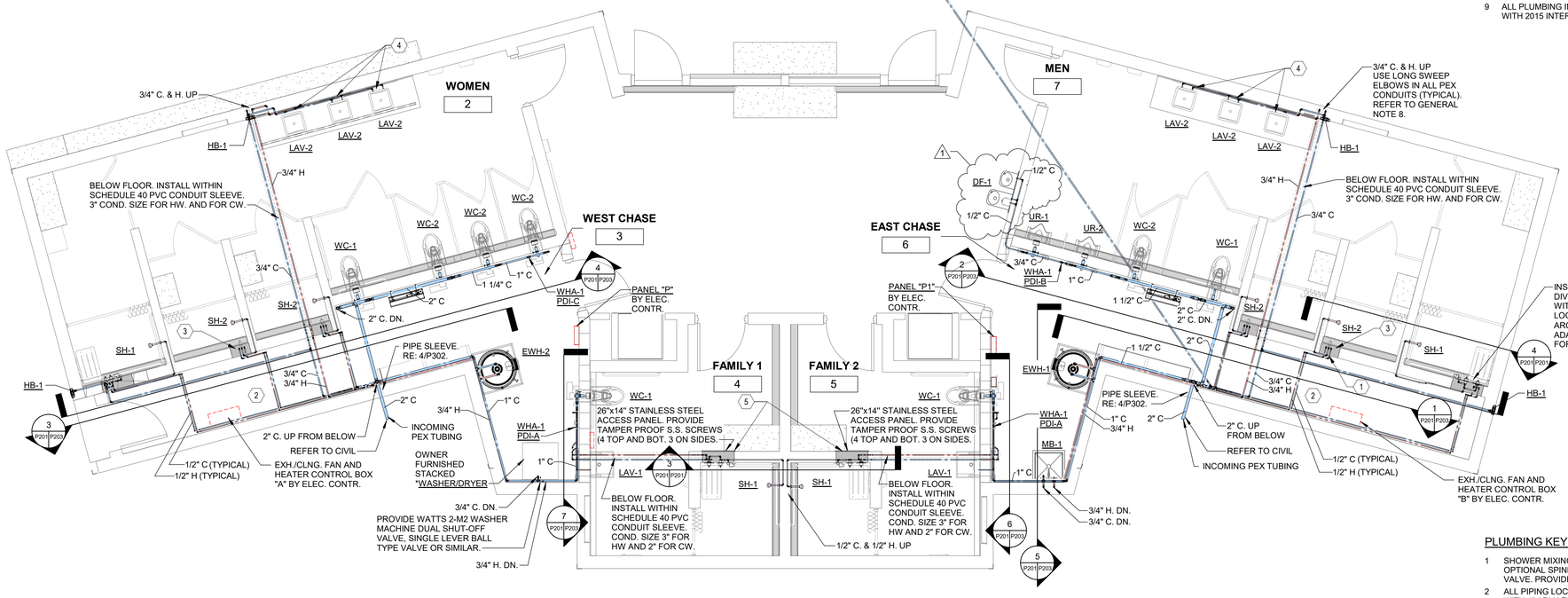

1 PLUMBING FLOOR PLAN - WATER
1/4" = 1'-0"

PLUMBING KEYED NOTES - P201

1 SHOWER MIXING VALVE SHALL BE ACCESSIBLE FROM CHASE. PROVIDE OPTIONAL SPINDLE EXTENSION KIT. PROVIDE WALL BLOCKOUT FOR MIXING VALVE. PROVIDE TAMPER RESISTANT SCREWS FOR ESCUTCHEONS.

2 ALL PIPING LOCATED WITHIN JANITOR 6 AND STORAGE 3 SHALL BE INSULATED WITH 1" ARMAFLEX (OR SIMILAR) INSULATION.

3 SHOWER VALVES WILL BE INSTALLED WITHIN CMU BLOCK WALL. SHOWER VALVES MUST BE ACCESSIBLE FOR MAINTENANCE. PROVIDE BLOCKOUT FOR VALVES, DIVERTER AND HAND HELD SPRAY HEADS. REFER TO DETAIL THIS SHEET AS WELL AS STRUCTURAL AND ARCHITECTURAL DRAWINGS FOR REQUIREMENTS.

4 PROVIDE McGUIRE QUARTER TURN SUPPLY STOPS LFVB02 FOR COUNTERTOP LAVATORIES. PROVIDE VIEGA COPPER STUB-OUTS WITH WALL PLATE FOR SUPPLY STOPS (TYP. FOR COUNTER TOP LAVS). PROVIDE METAL BACKING FOR STUB-OUT WALL PLATE ATTACHMENT.

5 ACCESS PANEL FINISH SHALL CLOSELY MATCH TILE COLOR. COORDINATE WITH ARCHITECT FOR PROPER FINISH OF STAINLESS STEEL ACCESS PANEL. PANEL IS LOCATED ON NON-SHOWER WALL.

TEXAS PARKS & WILDLIFE

RICHTER ARCHITECTS

LAKE CORPUS CHRISTI STATE PARK
RESTROOM REPLACEMENT
PROJECT NUMBER 1210196A

DATE: 12-22-2020
DESIGNED BY: A.G.
DRAWN BY: AG.LW
REVIEWED BY: A.G.
REVISED: 03-09-21
REVISED:
REVISED:
PHASE: 100% CONSTRUCTION DOCUMENTS

SHEET TITLE
PLUMBING FLOOR PLAN - WATER

SHEET NUMBER
P201

STATE OF TEXAS
R. DAVID MORALES
108769
LICENSED
PROFESSIONAL ENGINEER
12/22/2020

STRIDDE, CALLINS & ASSOCIATES INC.
CONSULTING ENGINEERS
MECHANICAL ELECTRICAL
(361) 883-9199
Fax (361) 883-9177
342 S. Navigation Blvd
Corpus Christi, TX 78405-3618
Registration # F-006328

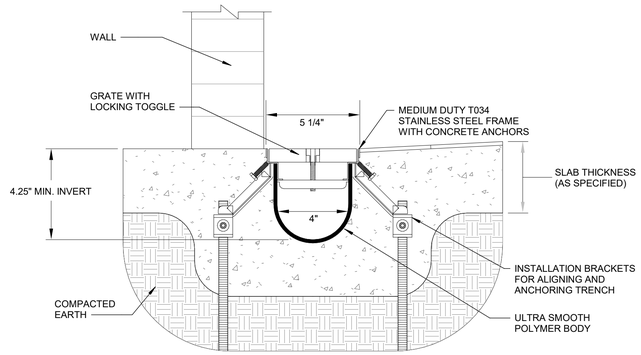

NOTES:
1. REINFORCE ACCORDING TO STRUCTURAL REQUIREMENTS.
2. TRENCH DRAIN MUST BE 1/8" BELOW FINISHED CONCRETE GRADE.
3. TYPICAL SLOPE FOR TRENCH DRAINS SHALL BE 0.5%.

② TYPICAL TRENCH DRAIN SECTION DETAIL
NO SCALE

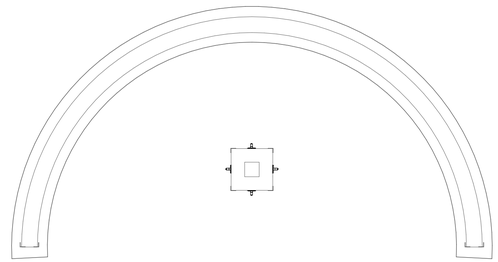

PLUMBING GENERAL NOTES

1. FIELD ADJUSTMENT OF PLUMBING EQUIPMENT, FIXTURE AND PIPING MAY BE NECESSARY TO FIT FIELD CONDITIONS. COORDINATE WITH ARCHITECTURAL DRAWINGS AND OTHER TRADES. SUCH WORK SHALL BE COMPLETED AT NO COST TO THE OWNER, ARCHITECT, OR ENGINEER.
2. IN THE EVENT THAT UTILITIES OR SUBSTRUCTURES NOT SHOWN ON THE DRAWINGS ARE ENCOUNTERED, IT SHALL BE CONTRACTOR'S RESPONSIBILITY TO CONSTRUCT THE WORK AS INTENDED AT NO INCREASE IN THE CONTRACT PRICE. ALL DAMAGED OR DISTURBED UTILITIES SHALL BE RECONSTRUCTED TO AS-IS OR BETTER CONDITION BY THE CONTRACTOR AT HIS EXPENSE.
3. FIELD VERIFY EXACT DIMENSIONS AND LOCATIONS OF WALLS, DOORS, GRADE BEAMS, ETC., BEFORE BEGINNING ANY CONSTRUCTION WORK. COORDINATE WITH ARCHITECTURAL PLANS. COORDINATE WITH OTHER TRADES.
4. PROVIDE DECORATIVE TRIM AROUND OPENINGS IN FINISHED AREAS. ESCUTCHEON PLATES SHALL BE CHROME PLATED BRASS.
5. SLOPE ALL DRAIN LINES AS INDICATED. WHERE SLOPE IS NOT INDICATED, USE A SLOPE OF 0.25 INCH PER FOOT. AT NO TIME SHALL SLOPE BE LESS THAN 0.25 INCH PER FOOT UNLESS A CONFLICT EXISTS AND CONTRACTOR CAN VERIFY THAT A MEDIAN FLUID VELOCITY OF 2 FT./SEC. CAN BE ACHIEVED AND MAINTAINED OR IS DIRECTED OTHERWISE BY OWNER'S REPRESENTATIVE.
6. MAKE ALL FINAL CONNECTIONS TO FIXTURES AND EQUIPMENT INCLUDING TRAPS, WATER SERVICE, DRAINS, AND DECORATIVE TRIM. PROVIDE SHUT OFF VALVES AT ALL FIXTURES AND EQUIPMENT. PROVIDE VACUUM BREAKERS WHERE INDICATED AND AS REQUIRED BY GOVERNING AUTHORITIES AND CODE REQUIREMENTS.
7. CERTAIN EQUIPMENT, INDICATED ON DRAWINGS WITH AN ASTERISK (*), IS FURNISHED BY OWNER AND/OR EQUIPMENT SPECIFIED ELSEWHERE, WHICH MAY REQUIRE ROUGH-IN AND FINAL CONNECTIONS BY THE CONTRACTOR. PRIOR TO INSTALLATION OF EQUIPMENT, CONTRACTOR SHALL OBTAIN CERTIFIED SHOP DRAWINGS OF EQUIPMENT. CONTRACTOR SHALL VERIFY THAT THESE PRINTS HAVE BEEN CHECKED BY THE ARCHITECT AND HAVE BEEN APPROVED BY THE ARCHITECT. NO ROUGH-IN SHALL BE DONE BY THE CONTRACTOR UNTIL APPROVED SHOP DRAWINGS ARE OBTAINED.
8. ALL PEX PIPING INSTALLED BELOW SLAB AND/OR WITHIN BLOCK WALL SHALL BE ENCASED WITHIN PVC CONDUIT OF APPROPRIATE SIZE, CONFIGURATION AND LONG SWEEP ELBOWS TO ALLOW FOR EASE OF REPAIRS AND REPLACEMENT.
9 ALL PLUMBING INSTALLATION, FIXTURES AND MATERIALS SHALL COMPLY WITH 2015 INTERNATIONAL PLUMBING AND BUILDING CODE.

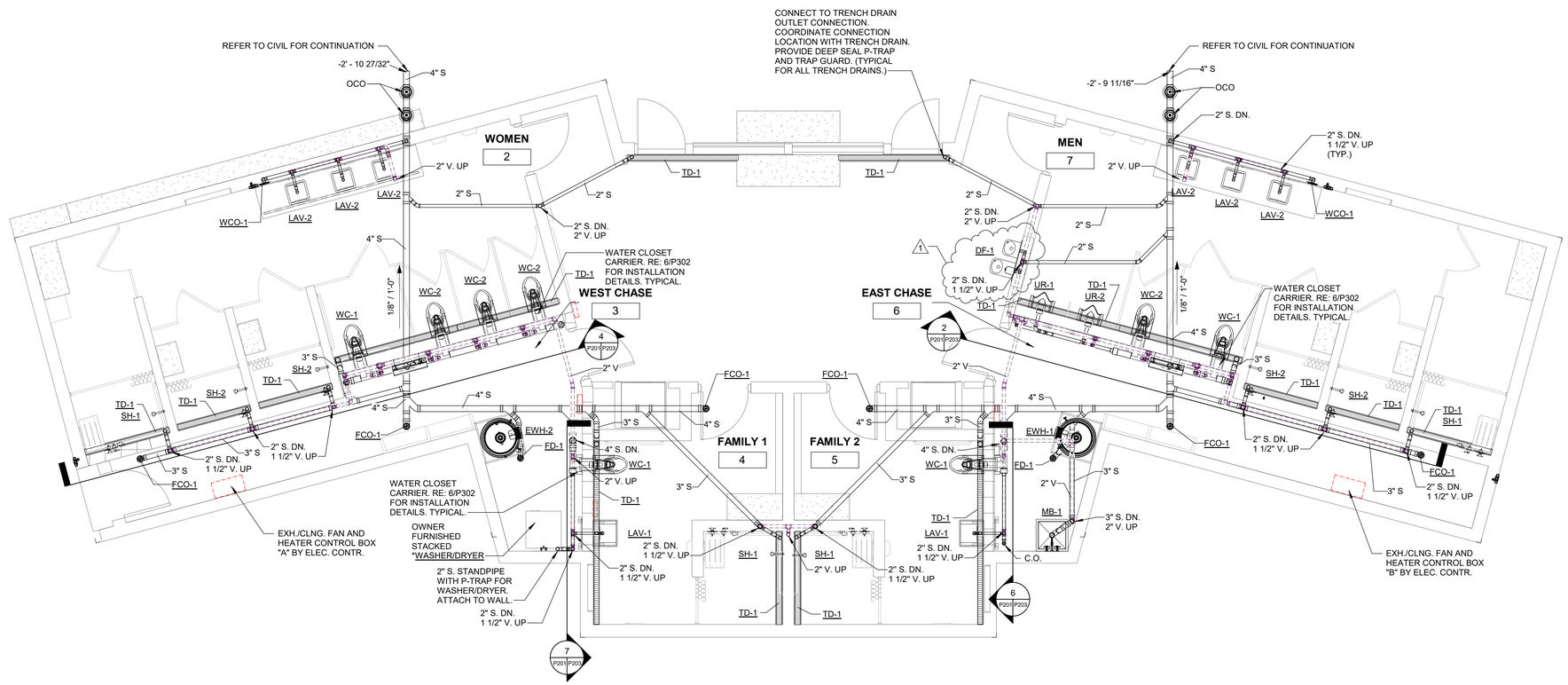

① PLUMBING FLOOR PLAN - SOIL, WASTE & VENT
1/4" = 1'-0"

TEXAS PARKS & WILDLIFE

RICHTER ARCHITECTS

LAKE CORPUS CHRISTI STATE PARK
RESTROOM REPLACEMENT
PROJECT NUMBER 1210196A

DATE: 12-22-2020
DESIGNED BY: A.G.
DRAWN BY: AG.LW
REVIEWED BY: A.G.
REVISED: 03-09-21
REVISED:
REVISED:
PHASE: 100% CONSTRUCTION DOCUMENTS

SHEET TITLE
PLUMBING FLOOR PLAN - SOIL, WASTE & VENT

SHEET NUMBER
P202

STATE OF TEXAS
R. DAVID MORALES
108769
LICENSED PROFESSIONAL ENGINEER
12/22/2020

STRIDDE, CALLINS & ASSOCIATES INC.
CONSULTING ENGINEERS
MECHANICAL ELECTRICAL
(361) 883-9199
Fax (361) 883-9177
342 S. Navigation Blvd.
Corpus Christi, TX 78405-3618
Registration # F-006328

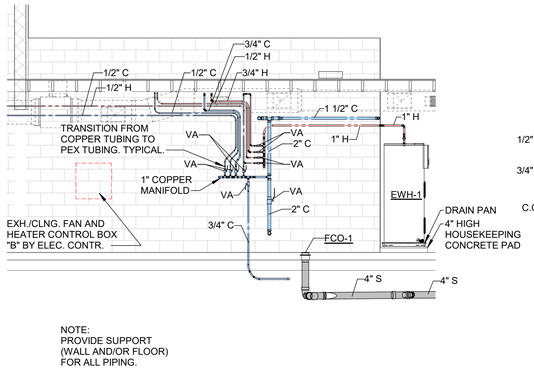

1 PLUMBING SECTION - JANITOR 6 - WATER MANIFOLD
1/4" = 1'-0"

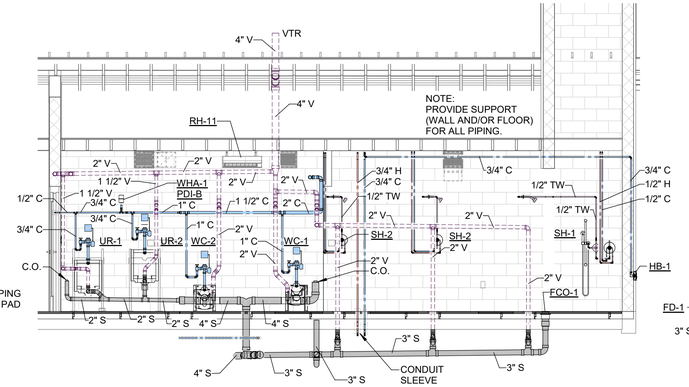

2 PLUMBING SECTION - JANITOR 6 - UTILITY WALL
1/4" = 1'-0"

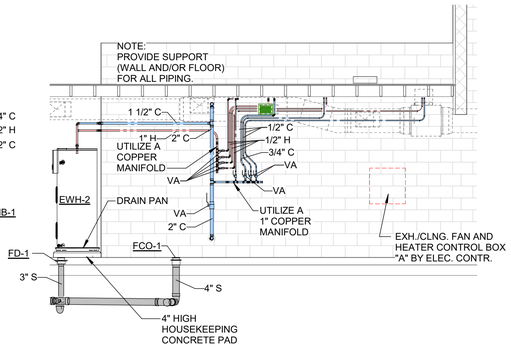

3 PLUMBING SECTION - STORAGE 3 - WATER MANIFOLD
1/4" = 1'-0"

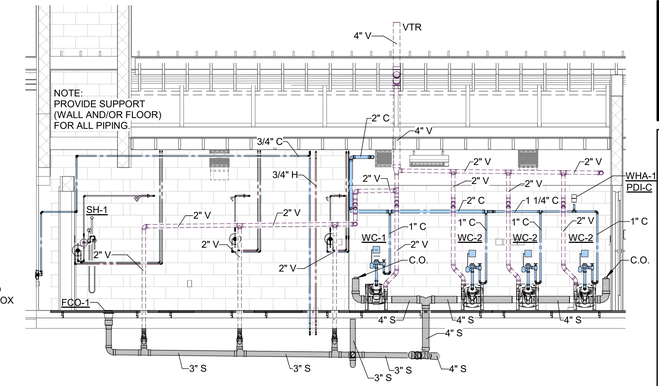

4 PLUMBING SECTION - STORAGE 3 - UTILITY WALL
1/4" = 1'-0"

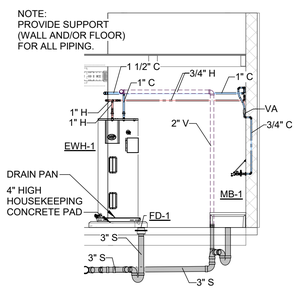

5 PLUMBING SECTION - JANITOR 6 - WATER HEATER
1/4" = 1'-0"

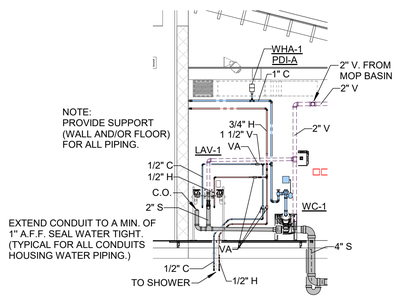

6 PLUMBING SECTION - JANITOR 6 - FAMILY 2
1/4" = 1'-0"

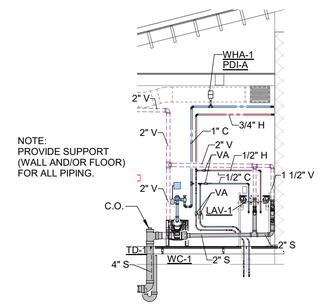

7 PLUMBING SECTION - FAMILY 4
1/4" = 1'-0"

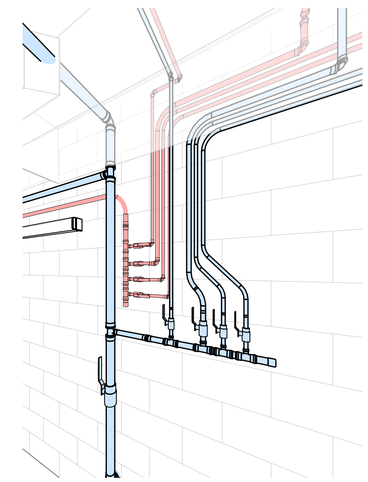

8 PERSPECTIVE VIEW - WATER ENTRY - STORAGE 3 - JANITOR 6 SIMILAR

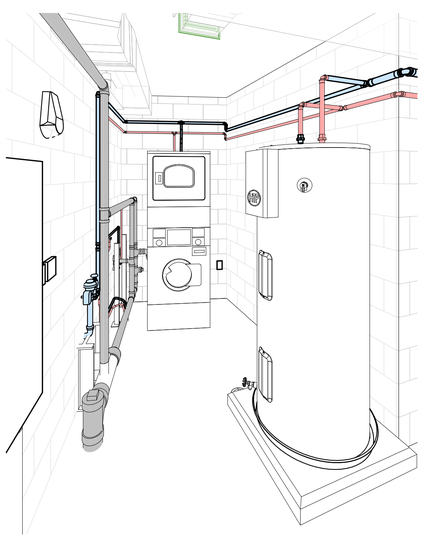

9 PERSPECTIVEW VIEW - WATER HEATER - STORAGE 3

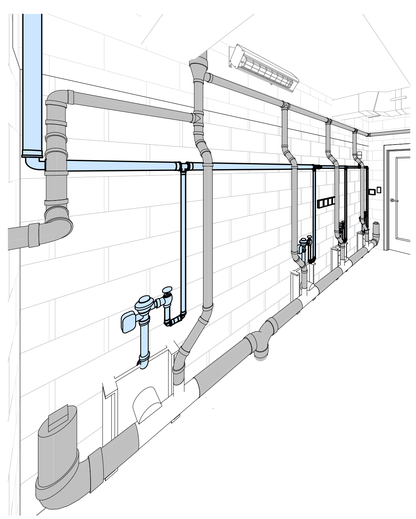

10 PERSPECTIVE VIEW - WATER CLOSET WET WALL - STORAGE 3

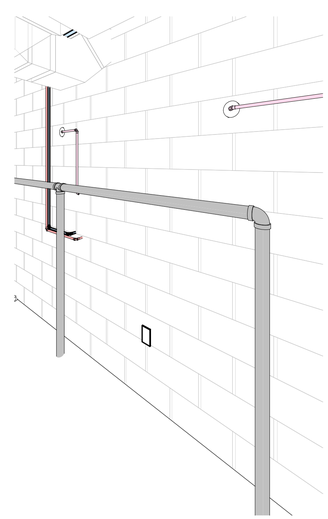

11 PERSPECTIVE VIEW - SHOWER WET WALL - JANITOR 6 - STORAGE 3 SIMILAR

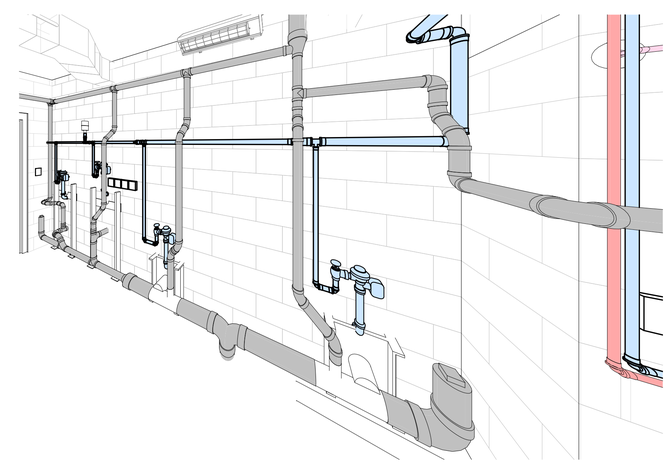

12 PERSPECTIVE VIEW - WATER CLOSET WET WALL - JANITOR 6

TEXAS PARKS & WILDLIFE

RICHTER ARCHITECTS

LAKE CORPUS CHRISTI STATE PARK
RESTROOM REPLACEMENT
PROJECT NUMBER 1210196A

DATE: 12-22-2020
DESIGNED BY: A.G.
DRAWN BY: AG.LW
REVIEWED BY: A.G.
REVISED:
REVISED:
REVISED:
PHASE: 100% CONSTRUCTION DOCUMENTS

SHEET TITLE
PLUMBING SECTIONS

SHEET NUMBER
P203

STATE OF TEXAS
R. DAVID MORALES
108769
LICENSED
PROFESSIONAL ENGINEER
12/22/2020

STRIDDE, CALLINS & ASSOCIATES INC.
CONSULTING ENGINEERS
MECHANICAL ELECTRICAL
(361) 883-9199
Fax (361) 883-9197
342 S. Navigation Blvd.
Corpus Christi, TX 78405-3618
Registration # F-006328

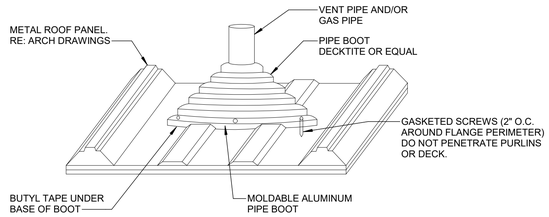

3 VENT THRU METAL ROOF (VTR) DETAIL
1/8" = 1'-0"

NOTE:
REFER TO ARCHITECTURAL DRAWINGS FOR DETAILED INFORMATION.

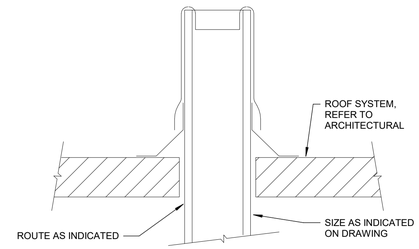

2 VENT THRU FLAT ROOF (VTR) DETAIL
NO SCALE

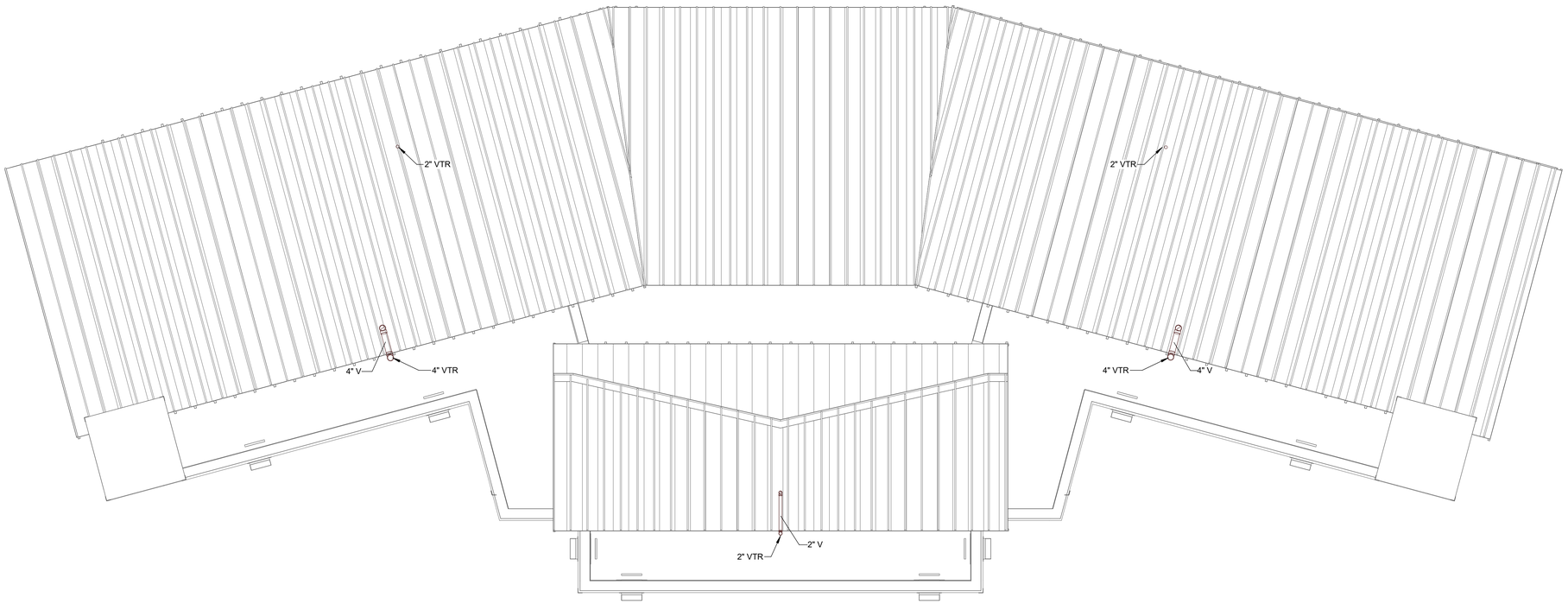

1 PLUMBING FLOOR PLAN
1/4" = 1'-0"

TEXAS PARKS & WILDLIFE

RICHTER ARCHITECTS

LAKE CORPUS CHRISTI STATE PARK
RESTROOM REPLACEMENT
PROJECT NUMBER 1210196A

DATE: 12-22-2020
DESIGNED BY: A.G.
DRAWN BY: AG.LW
REVIEWED BY: A.G.
REVISED:
REVISED:
REVISED:
PHASE: 100%
CONSTRUCTION
DOCUMENTS

SHEET TITLE
PLUMBING
ROOF PLAN

SHEET NUMBER
P204

STATE OF TEXAS
R. DAVID MORALES
108769
LICENSED
PROFESSIONAL ENGINEER
12/22/2020

STRIDDE, CALLINS
& ASSOCIATES INC.
CONSULTING ENGINEERS
MECHANICAL ELECTRICAL
(361) 883-9199
Fax (361) 883-9197
342 S. Navigation Blvd
Corpus Christi, TX 78405-3618
Registration # F-006328

PLUMBING ABBREVIATIONS

LAV.	LAVATORY
UR.	URINAL
SK.	SINK
SH.	SHOWER
ESEW.	EMERGENCY SHOWER EYEWASH
MB.	MOP BASIN
EWC.	ELECTRIC WATER COOLER
WC.	WATER CLOSET
UR.	URINAL
WVB.	WATER VALVE BOX
CDB.	CONDENSATE DRAIN BOX
DF.	DRINKING FOUNTAIN
RC.	REMOTE CHILLER
DISP.	DISPOSAL
EWH.	ELECTRIC WATER HEATER
GWH.	GAS WATER HEATER
FD.	FLOOR DRAIN
FS.	FLOOR SINK
FCO.	FLOOR CLEANOUT
OCO.	OUTSIDE CLEANOUT
RD.	ROOF DRAIN
ORD.	OVERFLOW ROOF DRAIN
HB.	HOSE BIBB
HWCP.	HOT WATER CIRCULATING PUMP
WCO.	WALL CLEANOUT
C.	COLD WATER PIPING
H.	HOT WATER PIPING
HR.	HOT WATER RETURN PIPING
TW.	TEMPERED WATER PIPING
AR.	ARGON PIPING
A.	AIR PIPING
O.	OXYGEN PIPING
P.	PROPYLENE AND/OR ACETYLINE PIPING
NOS.	COMPRESSED GAS (NOS) PIPING
V.	VENT PIPING
G.	GAS PIPING
ST.	STEAM PIPING
D.	DRAIN PIPING
TP.	TRAP PRIMER
VR.	VACUUM RELIEF VALVE
T-P VA.	TEMPERATURE-PRESSURE RELIEF VALVE
GD.	GRATE DRAIN
UM.	UTILITY MARKER
AC.	AIR CHAMBER
VTR.	VENT THRU ROOF
FTR.	FLUE THRU ROOF
VA.	VALVE
CK. VA.	CHECK VALVE
GC.	GAS COCK
HD.	HUB DRAIN
AP.	ACCESS PANEL
CO.	CLEANOUT
CONTR.	CONTRACTOR
DN.	DOWN

NOTES:

(1) - THIS IS A STANDARIZED ABBREVIATION LEGEND. ALL ABBREVIATIONS HEREIN MAY NOT BE APPLICABLE TO THIS PROJECT.

(2) - PIPING SYMBOL HAVING THE LETTER "E" BEFORE THE SYMBOL DENOTES EXISTING PIPING FOR COLD WATER, HOT WATER, SOIL, WASTE AND VENT PIPING, ETC.

PLUMBING FIXTURE BRANCH PIPE SIZE SCHEDULE

DESCRIPTION	SOIL/WASTE	VENT	COLD WATER	HOT WATER
WATER CLOSET	4"	2"	1"	-
URINAL	2"	1 1/2"	3/4"	-
LAVATORY	2"	1 1/2"	1/2"	1/2"
MOP BASIN	3"	2"	3/4"	3/4"
SHOWER	3"	2"	1/2"	1/2"
DRINKING FOUNTAIN	2"	1 1/2"	1/2"	-

PLUMBING APPROVED MANUFACTURER SCHEDULE

WATER CLOSETS	KOHLER	ZURN
	AMERICAN STANDARD	
URINALS	KOHLER	ZURN
	AMERICAN STANDARD	
FLUSH VALVES	SLOAN - ROYAL	ZURN - AQUAFLUSH
LAVATORIES	KOHLER	ZURN
	AMERICAN STANDARD	
SHOWERS	KOHLER	MOEN
	AMERICAN STANDARD	SYMMONS
LAVATORY FAUCETS	MOEN	KOHLER
	AMERICAN STANDARD	
DRINKING FOUNATINS	ELKAY	HALSEY TAYLOR
	HAWS	
MOP BASIN	FIAT	
	CRANE	
MISCELLANEOUS TRIM (TRAPS, SUPPLIES, STRAINERS)	DEARBORN	McGUIRE
	BRASS CRAFT	ROYAL BRASS
DRAIN AND SUPPLIES INSULATION KITS	TRUEBRO	
	PLUMBEREX	
THERMOSTATIC MIXING VALVES	LEONARD	ARMSTRONG
	WATTS	POWERS
FLOOR DRAINS, FLOOR SINKS, FLOOR CLEANOUTS, WALL CLEANOUTS, OUTSIDE CLEANOUTS, AND TRENCH DRAINS	ZURN	JOSAM
	WATTS	SMITH

PLUMBING FIXTURE SCHEDULE

Type Mark	Manufacturer	Model	ADA Compliant	Description	Accessories	Count
WC-1	American Standard	3353.101	Yes	Wall hung rear outlet white vitreous china siphon jet water closet with elongated bowl, 1-1/2" back spud, 2-1/8" passageway , antimicrobial surface. Operates in the range of 1.1 - 1.6 gpf. Concealed flushometer, 1.28 gpf, control stop, vacuum breaker and self cleaning filter. ADA/TAS compliant installation for Adults . Top of seat 18" - 19". Flush valve handle on wide side of stall.	FLUSH VALVE-Zurn Aquaflush ZEMS6152AV-HET/CARRIER-Watts ISCA101 / SEAT-Bemis 1655-SS/C/	4
WC-2	American Standard	3353.101	No	Wall hung rear outlet white vitreous china siphon jet water closet with elongated bowl, 1-1/2" back spud, 2-1/8" passageway , antimicrobial surface. Operates in the range of 1.1 - 1.6 gpf. Concealed flushometer, 1.28 gpf, control stop, vacuum breaker and self cleaning filter. Install 15" A.F.F.	FLUSH VALVE-Zurn Aquaflush ZEMS6152AV-HET/CARRIER-Watts ISCA101 / SEAT-Bemis 1655-SS/C/	4
UR-1	American Standard	6590.001	Yes	'WASHBROOK UNIVERSAL' High Efficiency Urinal, wall hung for flush valve, vitreous china, wash out flush action 0.125 gpf to 1.0 gpf (0.5 lpf to 3.8 lpf), extended sides for privacy, integral flush spreader, 3/4" (19mm) top spud, wall hangers, open trap.	FLUSH VALVE-Zurn Aquaflush ZEMS6295/CARRIER-Watts CA311 /	1
UR-2	American Standard	6590.001	No	'WASHBROOK UNIVERSAL' High Efficiency Urinal, wall hung for flush valve, vitreous china, wash out flush action 0.125 gpf to 1.0 gpf (0.5 lpf to 3.8 lpf), extended sides for privacy, integral flush spreader, 3/4" (19mm) top spud, wall hangers, open trap.	FLUSH VALVE-Zurn Aquaflush ZEMS6295/CARRIER-Watts CA311 /	1
LAV-1	American Standard	9024.004EC	Yes	21-1/4" x 20-1/2", wall mount white vitreous china lavatory and shroud , center hole, overflow, ADA compliant, drilled for concealed arm carrier. Meter operated, single mount, vandal resistant, flexible s.s. supply lines, built-in mixing-manual on/off handle, in-line filters, grid drain with tailpiece, metal throatplate. Install top of rim height 34" above finished floor to comply with Adult ADA/TAS requirements.	FAUCET-Zurn Z6950-XL-S-W1-CWB/TRAP ASSEMBLY-McGuire PW2125HDWC / SUPPLIES & STOPS-McGuire LFBV2-02 / CARRIER-Watts WCA411 /	2
LAV-2	American Standard	0426.000	Yes	13.5" x 13.5" undercounter mount sink, square style, white vitreous china, overflow, grid drain with tailpiece, metal throatplate, ADA compliant. Above deck touch free electronic faucet, chrome plated finish, vandal resistant aerator, adjustable distance activation, AC powered, one transformer shall operate multiple fixtures, 0.5 gpm and in-line filters. Install top of rim height 34" above finished floor to comply with Adult ADA/TAS requirements. Provide TMV-1 below lav.	FAUCET-Zurn Z6950-XL-S-W1-CWB/TRAP ASSEMBLY-McGuire PW2125HDWC / SUPPLIES & STOPS-McGuire LFBV2-02 /	6
SH-1	Symmons Industries, Inc.	9605-PLR	Yes	Shower Valve System with Temptrol Pressure balancing mixing valve, built-in supply turn stops, vandal resistant screws, adjustable stop screw to limit handle turn, vandal resistant screws, handheld shower, 60" double swivel hose, 36" slide bar, 3-function transfer valve. Vandal resistant shower head, vandal resistant flow rate 1.5 gpm, screws, chrome plated finish. Coordinate with Architect before installation of controls to comply with ADA/TAS requirements.	OPTIONS-Spindle & Diverter Extension Kit. / ACCESSORIES-Tamper Resistant Screws./	4
SH-2	Symmons Industries, Inc.	9601-P		Shower Valve System with Temptrol Pressure balancing mixing valve, built-in supply turn stops, vandal resistant screws. Vandal resistant shower head, flow rate 1.5 gpm, chrome plated finish.		5
SH-3	Chicago Faucets & Outdoor Shower Company	770-665PSHCP, 621-CP, WMFS-442-ADA	Yes	Shower system with metering valve for body and foot. 1-3/4" vandal proof metering push valve for shower head, 1/2" NPT female thread inlet and outlet, blue index button and auto-timed metering cartridge with adjustable run time from 2 to 15 seconds. Wall mounted institutional shower head, 2.0 GPM max., field adjustable spray angle from 25° to 30° and 1/2" NPT female thread inlet. ADA-compliant wall mounted foot shower, metering push valve and a one-inch aerating shower head.	ACCESSORIES-Tamper Resistant Screws./	3
SH-4	Chicago Faucets & Outdoor Shower Company	770-665PSHCP, 621-CP, WMFS-442-ADA	Yes	Same as SH-3 except installed to meet ADA requirements. Install shower head 48" A.F.F.	ACCESSORIES-Tamper Resistant Screws./	1
DF-1	Haws Corporation	1119.14/BP32/1920/6469/SK1/6700.4/6426	Yes	ADA compliant wall-mounted drinking fountain, cane apron, bottle filler with push button operation, backing plates and filter. Fountains shall include dual 14-gauge Type 304 Stainless Steel satin finish basins, polished chrome-plated brass vandal-resistant bubbler heads, polished chrome-plated brass vandal-resistant waste strainers, s.s. satin finish back panel, high and low fountain mounting levels, s.s. cane apron, and 1-1/4" NPT traps. Fountains and bottle filler use lead-free push-button operated stainless steel valves with front accessible cartridge and flow adjustment, and vandal resistant bottom plates.	TRAP-McGuire 1-1/4"x1-1/4" 17 ga. cast brass trap and tubular wall bend and C.O. plug. / SUPPLIES & STOPS-McGuire LFBV2-02 /	1
MB-1	Fiat Products	MSB2424		The MSB-2424 shall have overall outside dimensions of 24" x 24" x 10". The molding shall be done in matched metal dies under heat and pressure resulting in a one-piece homogeneous product. The unit shall have 10" high walls with not less than 1" wide.	FAUCET-Fiat 830-AA/TRAP-3" PVC. / HOSE AND BRACKET-Fiat 832-AA./MOP HANGER-Fiat 889-CC./WALL GUARD-Fiat MSG-3624./BUMPER-Fiat 1239-BB./	1
HB-1	Woodfrod Manufacturing Company	B75		Concealed wall hydrant with nickel bronze box and door, 3/4" hose thread outlet, integral vacuum breaker, all bronze head, seat casting and internal parts, and loose key handle.		4
FD-1	WATTS	FD-103-A5		Epoxy coated cast iron body floor drain, nickel bronze adjustable strainer, I.C., clamping collar, primer connection, vandal proof Torx head screws and deep seal p-trap.		2
TD-1	Eric-Sons - Duratrench	DTPF4-MDSS08 ZSA		4" Prefabricated Trench Drain, ultra smooth precast reinforced polymer reinforced trench body, body shall have identification label with flow direction, medium duty stainless steel frame, rigid metal installation brackets accept #4 rebar, 1 1/8" long x 1/4" dia. concrete anchors at 18" o.c., plywood topping for keeping debris out during construction, female receiving flange for water tight sealing of joints, 5" perforated ADA grate, locking device for grate, 12 gauge stainless steel grate. Trench drains shall include factory fabricated lengths, end caps, anchors, rebars, plywood and outlet connections. Contractor shall connect trench drain sections, set to grate and connect the outlets.		16
FCO-1	WATTS	CO-204-R		Epoxy coated cast iron floor cleanout, nickel bronze adjustable strainer, removable gas tight gasketed brass cleanout plug and vandal proof Torx head screws.		6
WCO-1	WATTS	CO-300-S		Watts Drainage CO-300-S square nickel bronze access cover with concealed mounting flanges and scoriated cover.		2
OCO	WATTS	CO-300-MF		Watts Drainage Products CO-300-MF epoxy coated cast iron access housing with anchor flanges and extra heavy duty ductile iron cover.		4

PLUMBING FIXTURE SCHEDULE

Type Mark	Manufacturer	Model	ADA Compliant	Description	Accessories	Count
EWH-1	HTP	ECV115		Electric water heater, 12,500 watt heating element, 115 gallon storage, 240 volt, single phase, 52 gallon per hour recovery based on 100 degrees F. rise in water temperature, AGA/ASME rated temperature and pressure relief valve, 316 stainless steel tank construction, tank working pressure of 150 PSI, tank insulation, manual reset, high limit control, adjustable surface mount thermostat, extended limited warranty against inner tank leaks if registered on-line, and HoldRite drain pan.		1
EWH-2	HTP	ECV115		Same as above.		1
WHA-1	Wade	4480 Shokstop		Stainless Steel Bellows type shock absorber / hammer arrestor.		4

Grand total: 73

TEXAS PARKS & WILDLIFE

RICHTER ARCHITECTS

LAKE CORPUS CHRISTI STATE PARK
RESTROOM REPLACEMENT
PROJECT NUMBER 1210196A

DATE: 12-22-2020
DESIGNED BY: A.G.
DRAWN BY: AG
REVIEWED BY: A.G.
REVISED: 03-09-21

REVISED:

REVISED:

PHASE: 100% CONSTRUCTION DOCUMENTS

SHEET TITLE
PLUMBING SCHEDULES

STATE OF TEXAS
R. DAVID MORALES
108769
LICENSED PROFESSIONAL ENGINEER
12/22/2020

STRIDDE, CALLINS & ASSOCIATES INC.
CONSULTING ENGINEERS
MECHANICAL ELECTRICAL
(361) 883-9199
Fax (361) 883-9177
342 S. Navigation Blvd.
Corpus Christi, TX 78405-3618
Registration # F-006328

SHEET NUMBER
P301

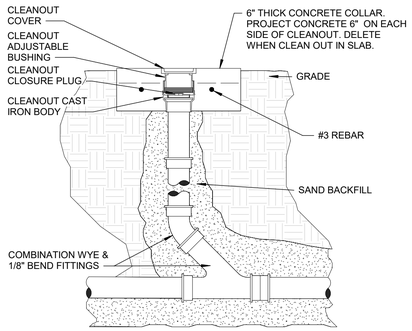

1 TYPICAL OUTSIDE CLEANOUT DETAIL
NO SCALE

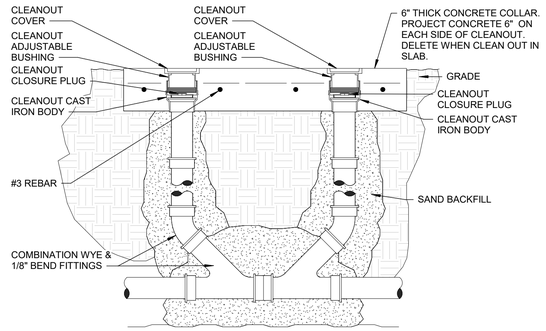

2 TYPICAL TWO-WAY CLEANOUT DETAIL
NO SCALE

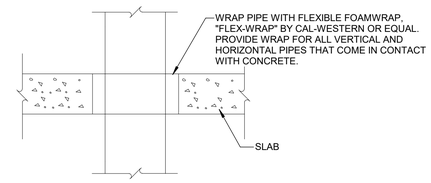

3 TYPICAL PIPE PENETRATION THRU FLOOR DETAIL
NO SCALE

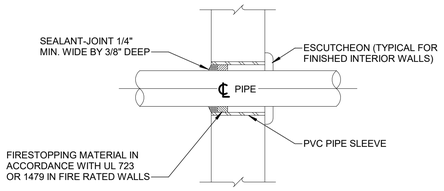

4 PIPE PENETRATION THRU WALL DETAIL
NO SCALE

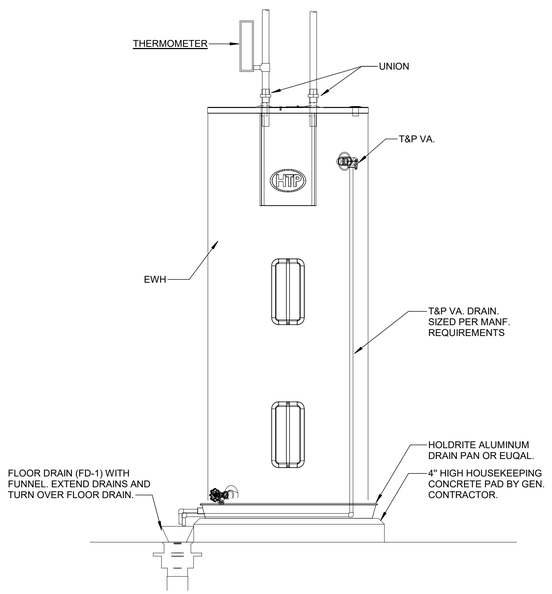

5 ELECTRIC WATER HEATER (EWH) DETAIL
NO SCALE

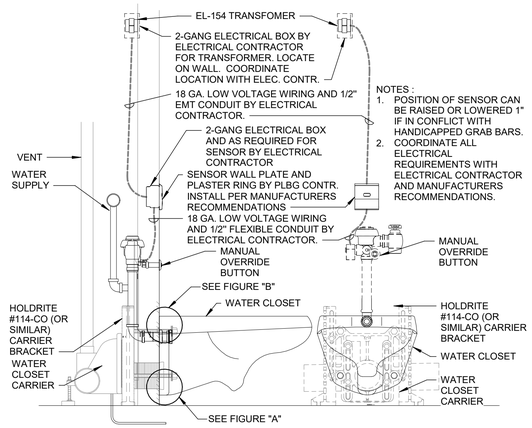

NOTES :
1. POSITION OF SENSOR CAN BE RAISED OR LOWERED 1" IF IN CONFLICT WITH HANDICAPPED GRAB BARS.
2. COORDINATE ALL ELECTRICAL REQUIREMENTS WITH ELECTRICAL CONTRACTOR AND MANUFACTURERS RECOMMENDATIONS.

6 TYPICAL WALL HUNG WATER CLOSET (WC) DETAIL
NO SCALE

WATER CLOSET STUD AND NIPPLE ADJUSTMENT TO FINISHED WALL

Closet horn depths and flange thicknesses may vary slightly, dependent upon the manufacturer of the fixture. The closet nipple is usually set 5/16" beyond the face of the finished wall, allowing for sufficient closet gasket compression, which ensures a gas and water tight seal (fig. 2). Fixture studs generally extend 2-1/4" beyond the finished wall, with the back-up nut set flush with the wall, and a 1/16" back-up washer between the wall and the fixture. Cap nuts must tighten fully to properly load the carrier (fig. 3).

These formulas may be used to calculate exact nipple and stud positions:

Nipple Position: A = B - 7/16"
Where: A = Distance nipple should extend beyond finished wall; B = Depth of closet horn

Stud Position: X = Y + 5/8"
Where: X = Distance stud should extend beyond finished wall; Y = Thickness of fixture flange

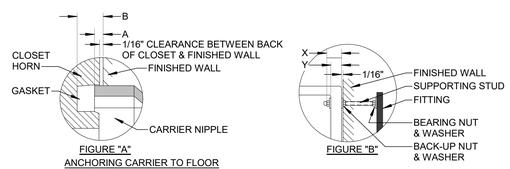

ANCHORING CARRIER TO FLOOR
Closet carriers must be securely anchored to the structural floor with min. 1/2" dia. lag bolts (supplied by others). Watts unique dual slot foot design speeds anchoring, eliminating the problem of lag bolts conflicting with concrete support bars.

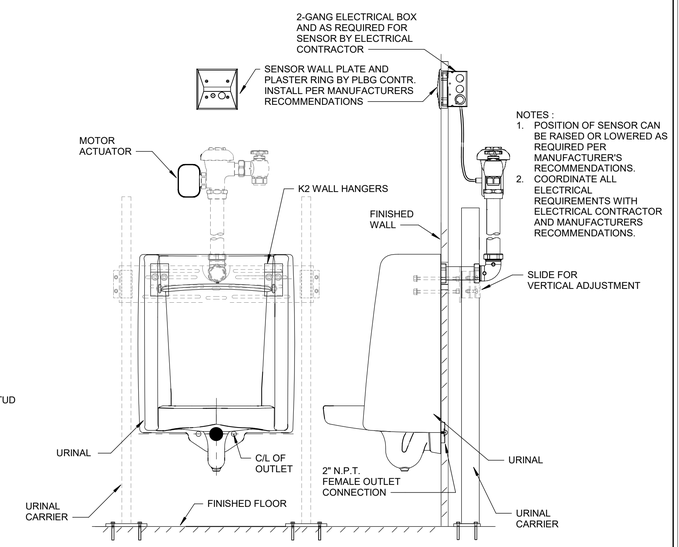

NOTES :
1. POSITION OF SENSOR CAN BE RAISED OR LOWERED AS REQUIRED PER MANUFACTURER'S RECOMMENDATIONS.
2. COORDINATE ALL ELECTRICAL REQUIREMENTS WITH ELECTRICAL CONTRACTOR AND MANUFACTURERS RECOMMENDATIONS.

7 TYPICAL URINAL (UR) DETAIL
NO SCALE

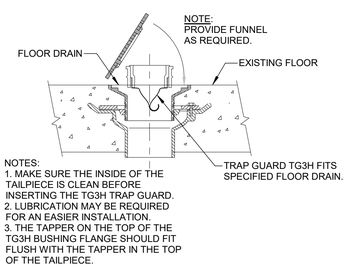

NOTES:
1. MAKE SURE THE INSIDE OF THE TAILPIECE IS CLEAN BEFORE INSERTING THE TG3H TRAP GUARD.
2. LUBRICATION MAY BE REQUIRED FOR AN EASIER INSTALLATION.
3. THE TAPPER ON THE TOP OF THE TG3H BUSHING FLANGE SHOULD FIT FLUSH WITH THE TAPPER IN THE TOP OF THE TAILPIECE.

8 TYPICAL FLOOR DRAIN (FD) DETAIL
NO SCALE

NOTE :
Install PVC Pipe and fittings in strict accordance with the installation recommendations of the pipe and fittings manufacturer, Appendix X1 of ASTM D2265 (Storage and Installation Procedures for PVC Plastic Drain, Waste, and Vent Piping) and for buried pipe ASTM D2321 (Standard practice for Underground Installation of Thermoplastic Pipe for Sewers and other Gravity-Flow Applications). Such instructions shall include but are not limited to cutting, solvent cementing and priming, joints, connections, transitions, alignment and grade, trenching, bedding, backfill and compaction, supports and spacing and allowance for thermal expansion.

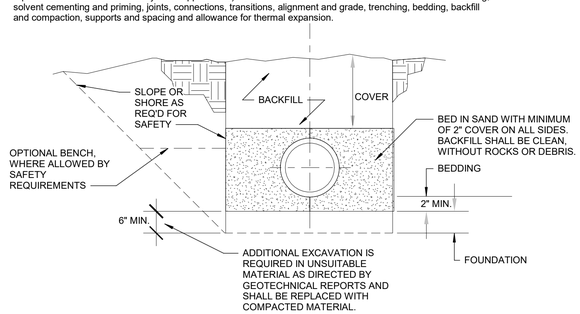

9 TYPICAL PIPE BEDDING DETAIL
NO SCALE

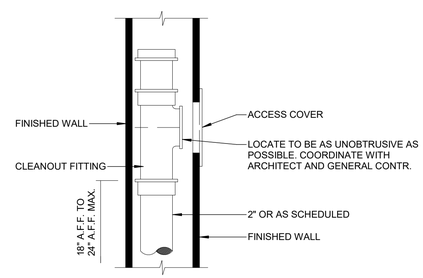

11 TYPICAL WALL CLEANOUT (WCO) DETAIL
NO SCALE

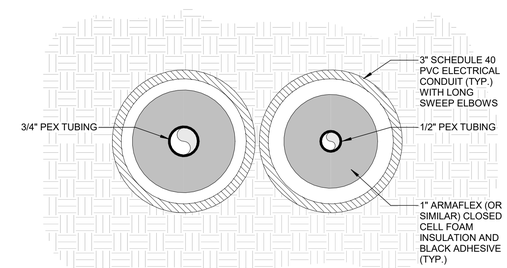

12 PEX PIPING BELOW FLOOR WITHIN ELEC. SCH. 40 PVC CONDUIT
NO SCALE

TEXAS PARKS & WILDLIFE

RICHTER ARCHITECTS

LAKE CORPUS CHRISTI STATE PARK
RESTROOM REPLACEMENT
PROJECT NUMBER 1210196A

DATE: 12-22-2020
DESIGNED BY: A.G.
DRAWN BY: AG.LW
REVIEWED BY: A.G.
REVISED:
REVISED:
REVISED:
PHASE: 100% CONSTRUCTION DOCUMENTS

SHEET TITLE
PLUMBING DETAILS

SHEET NUMBER
P302

STATE OF TEXAS
R. DAVID MORALES
108769
LICENSED
PROFESSIONAL ENGINEER
12/22/2020

STRIDDE, CALLINS & ASSOCIATES INC.
CONSULTING ENGINEERS
MECHANICAL ELECTRICAL
(361) 883-9199
Fax (361) 883-9197
342 S. Navigation Blvd
Corpus Christi, TX 78405-3618
Registration # F-006328

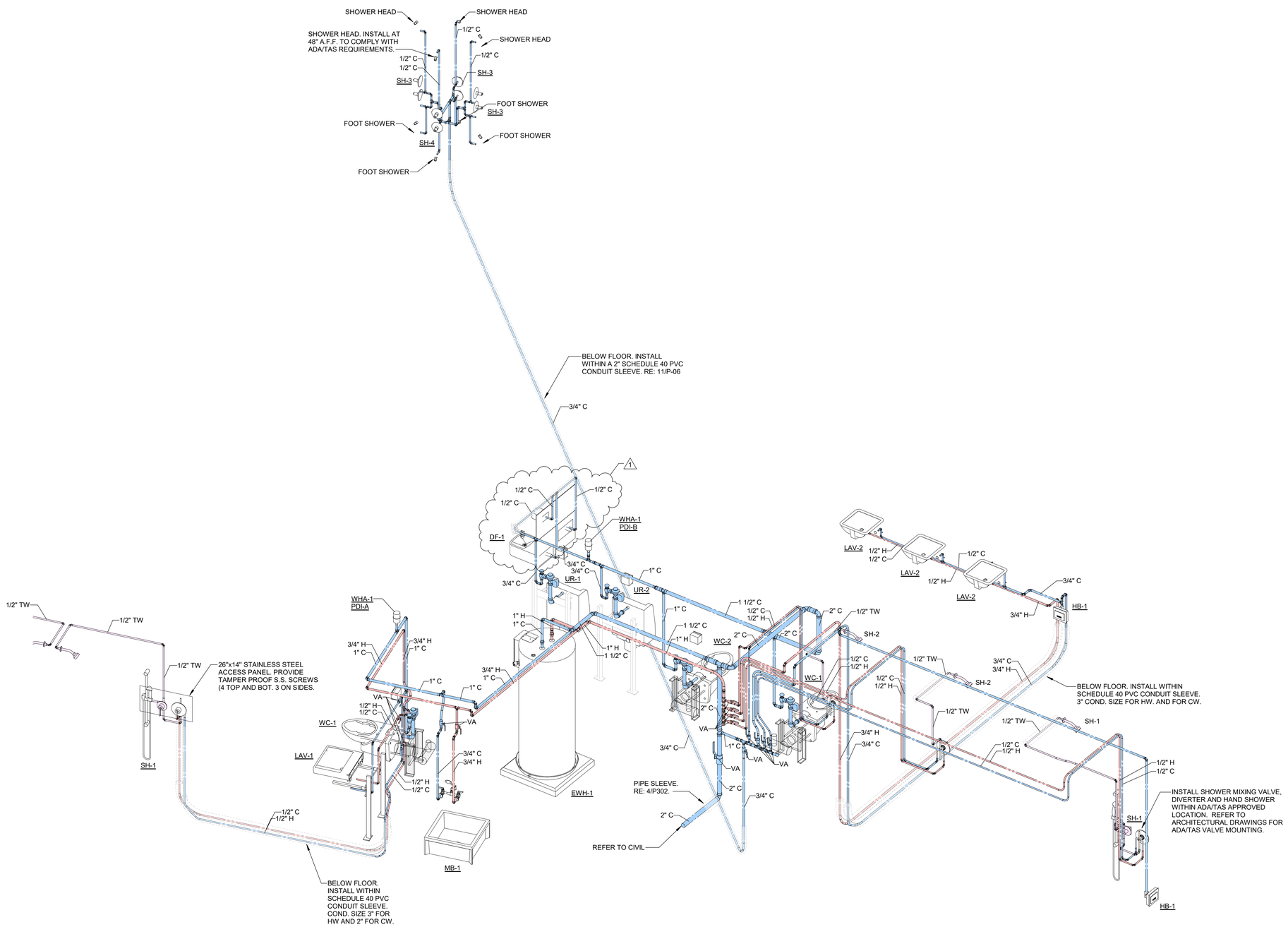

2 SCHEMATICS EAST SIDE - WATER

TEXAS PARKS & WILDLIFE

RICHTER ARCHITECTS

LAKE CORPUS CHRISTI STATE PARK
RESTROOM REPLACEMENT
PROJECT NUMBER 1210196A

DATE: 12-22-2020
DESIGNED BY: A.G.
DRAWN BY: AG.LW
REVIEWED BY: A.G.
REVISED: 03-09-21

REVISED:

REVISED:

PHASE: 100% CONSTRUCTION DOCUMENTS

SHEET TITLE
PLUMBING SCHEMATICS EAST SIDE - WATER

SHEET NUMBER
P303

STATE OF TEXAS
R. DAVID MORALES
108769
LICENSED
PROFESSIONAL ENGINEER
12/22/2020

STRIDDE, CALLINS & ASSOCIATES INC.
CONSULTING ENGINEERS
MECHANICAL ELECTRICAL
(361) 883-9199
Fax (361) 883-9177
342 S. Navigation Blvd.
Corpus Christi, TX 78405-3618
Registration # F-006328

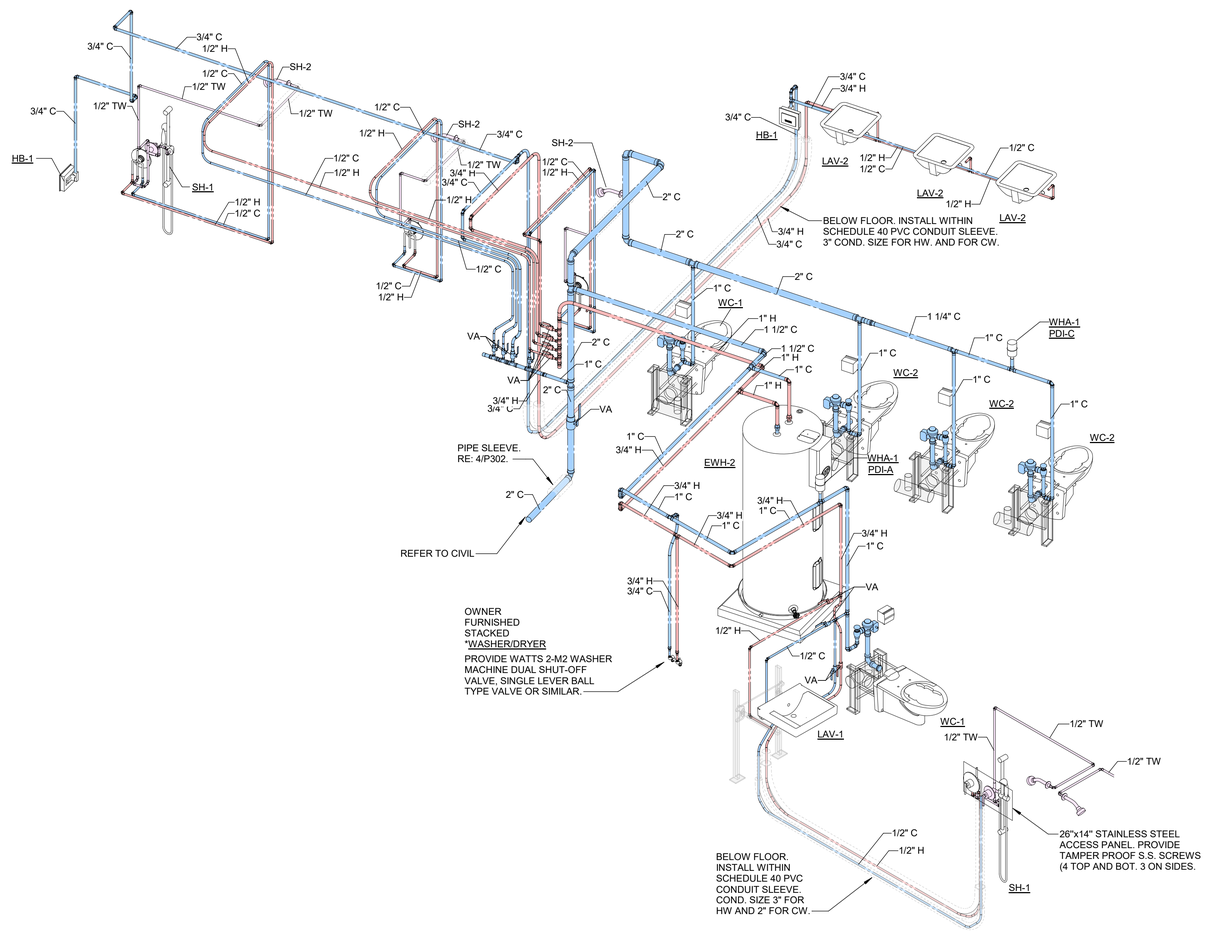

1 SCHEMATICS WEST SIDE - WATER

TEXAS PARKS & WILDLIFE

RICHTER ARCHITECTS

LAKE CORPUS CHRISTI STATE PARK
RESTROOM REPLACEMENT
PROJECT NUMBER 1210196A

DATE: 12-22-2020
DESIGNED BY: A.G.
DRAWN BY: AG.LW
REVIEWED BY: A.G.
REVISED:
REVISED:
REVISED:
PHASE: 100% CONSTRUCTION DOCUMENTS

SHEET TITLE
PLUMBING SCHEMATICS WEST SIDE - WATER

SHEET NUMBER
P304

STATE OF TEXAS
R. DAVID MORALES
108769
LICENSED
PROFESSIONAL ENGINEER
12/22/2020

STRIDDE, CALLINS & ASSOCIATES INC.
CONSULTING ENGINEERS
MECHANICAL ELECTRICAL
(361) 883-9199
Fax (361) 883-9197
342 S. Navigation Blvd
Corpus Christi, TX 78405-3618
Registration # F-006328

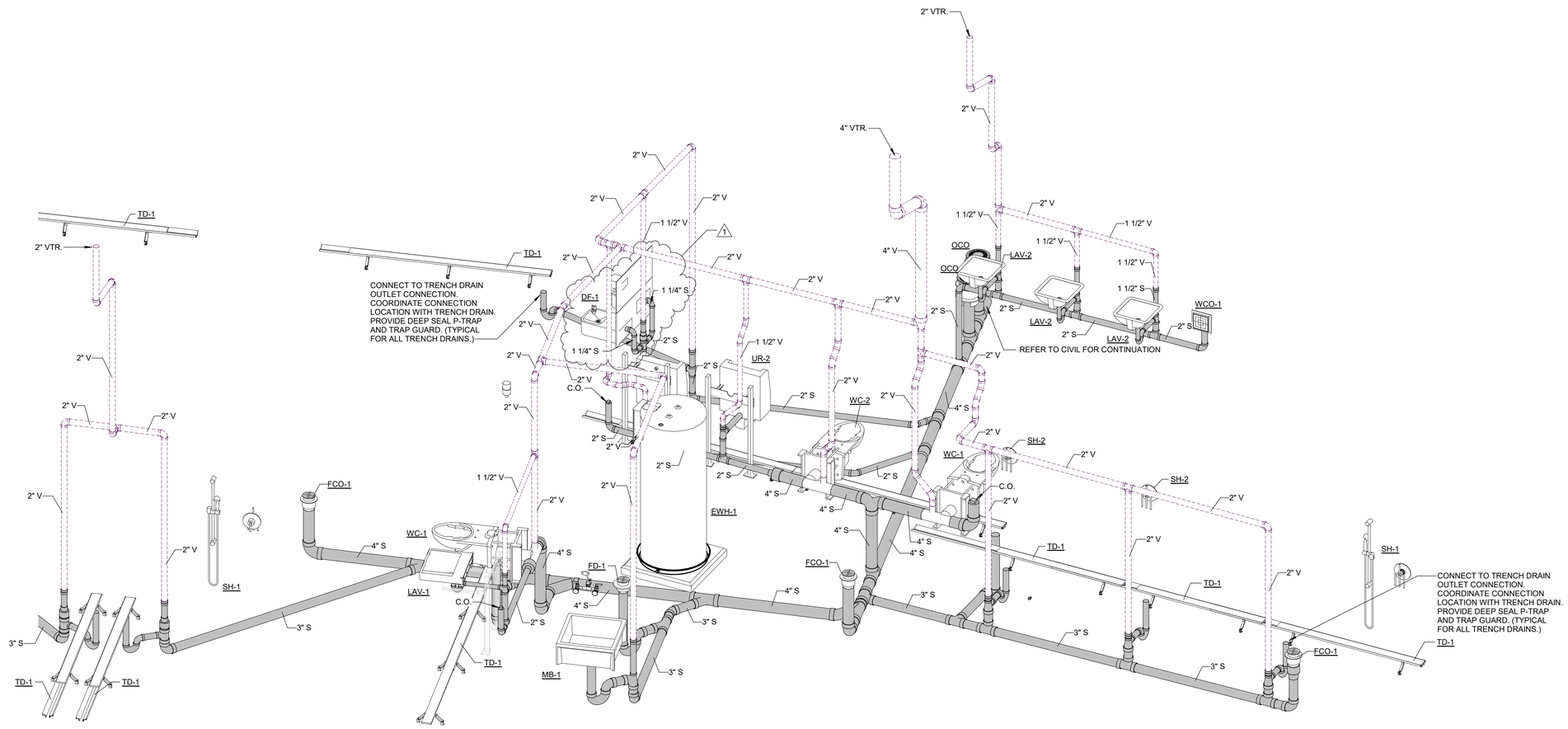

1 SCHEMATICS EAST SIDE - SOIL, WASTE & VENT

TEXAS PARKS & WILDLIFE

RICHTER ARCHITECTS

LAKE CORPUS CHRISTI STATE PARK
RESTROOM REPLACEMENT
PROJECT NUMBER 1210196A

DATE: 12-22-2020
DESIGNED BY: A.G.
DRAWN BY: AG.LW
REVIEWED BY: A.G.
REVISED: 03-09-21

REVISED:

REVISED:

PHASE: 100% CONSTRUCTION DOCUMENTS

SHEET TITLE
SCHEMATICS EAST SIDE - SOIL, WASTE AND VENT

SHEET NUMBER
P305

STATE OF TEXAS
R. DAVID MORALES
108769
LICENSED
PROFESSIONAL ENGINEER
12/22/2020

STRIDDE, CALLINS & ASSOCIATES INC.
CONSULTING ENGINEERS
MECHANICAL ELECTRICAL
(361) 883-9199
Fax (361) 883-9177
342 S. Navigation Blvd.
Corpus Christi, TX 78405-3618
Registration # F-006328

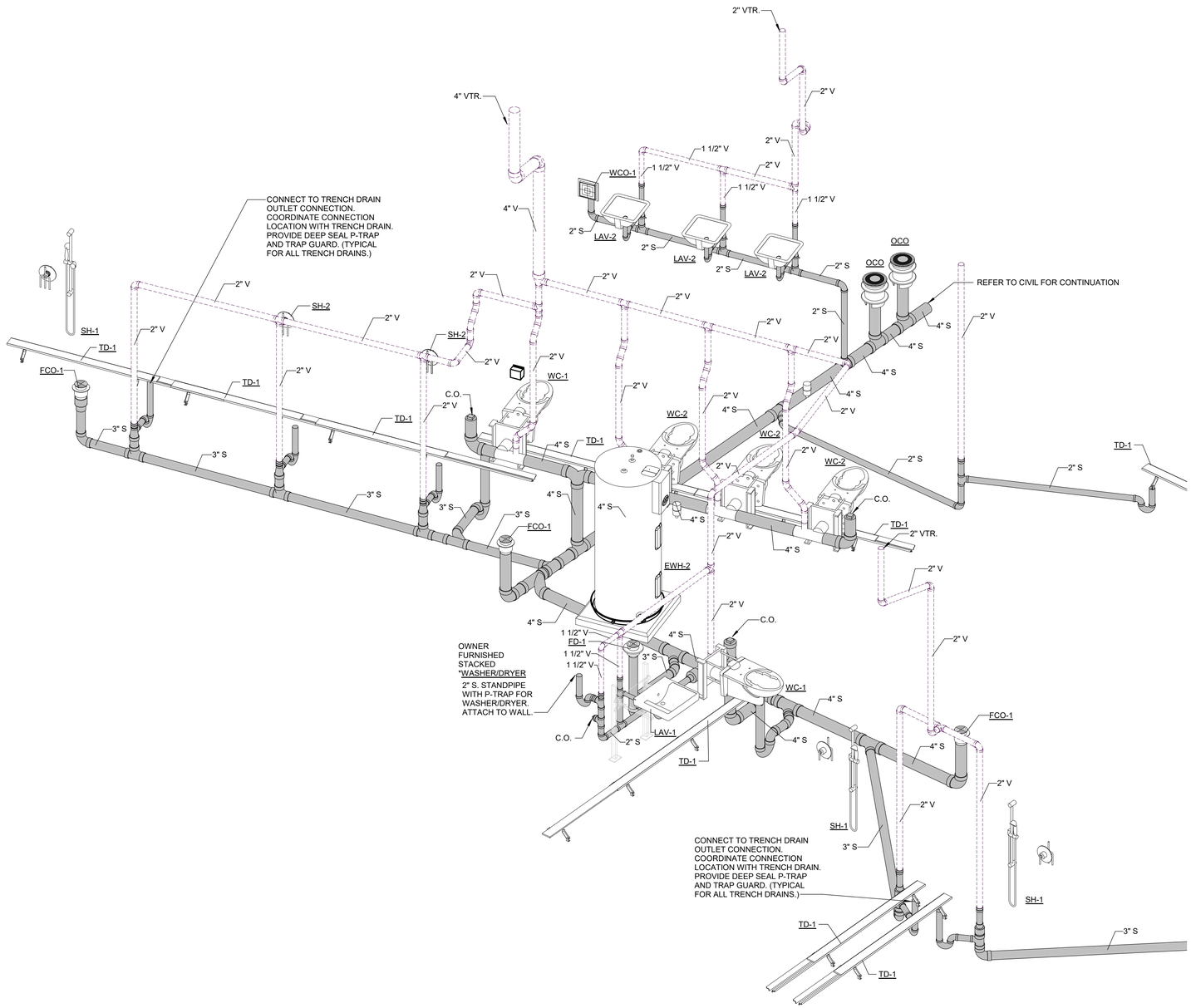

1 SCHEMATICS WEST SIDE - SOIL, WASTE & VENT

TEXAS PARKS & WILDLIFE

RICHTER ARCHITECTS

LAKE CORPUS CHRISTI STATE PARK
RESTROOM REPLACEMENT
PROJECT NUMBER 1210196A

DATE: 12-22-2020
DESIGNED BY: A.G.
DRAWN BY: AG.LW
REVIEWED BY: A.G.
REVISED:
REVISED:
REVISED:
PHASE: 100% CONSTRUCTION DOCUMENTS

SHEET TITLE
SCHEMATICS WEST SIDE - SOIL, WASTE & VENT

SHEET NUMBER
P306

STATE OF TEXAS
R. DAVID MORALES
108769
LICENSED
PROFESSIONAL ENGINEER
12/22/2020

STRIDDE, CALLINS & ASSOCIATES INC.
CONSULTING ENGINEERS
MECHANICAL • ELECTRICAL
(361) 883-9199
Fax (361) 883-9197
342 S. Navigation Blvd
Corpus Christi, TX 78405-3618
Registration # F-006328

GENERAL NOTES:

A. INFORMATION INCLUDED ON THIS DRAWING IS INTENDED TO INDICATED THE GENERAL CHARACTER AND EXTENT OF WORK REQUIRED. REFER TO SPECIFICATIONS FOR ADDITIONAL REQUIREMENTS.
B. PROJECT DESIGN IS BASED UPON 2020 NFPA 70 AND 2018 IECC.
C. MOST EXISTING UNDERGROUND UTILITIES ARE NOT INDICATED ON THIS DRAWING. THOSE EXISTING UNDERGROUND UTILITIES WHICH ARE INDICATED ARE SCHEMATIC LOCATIONS DERIVED FROM EXISTING AVAILABLE DRAWINGS. THE CONTRACTOR SHALL BE RESPONSIBLE FOR JOBSITE LOCATING AND PROTECTING ALL EXISTING UNDERGROUND UTILITIES PRIOR TO TRENCHING, BORING, EXCAVATING, OR PIER DRILLING.

KEYED NOTES: (ELECTRICAL SITE PLAN)

1. EXISTING OVERHEAD PRIMARY LINE TO REMAIN.
2. INSTALL GEAR / DEVICE ON SUPPORT RACK BY BASE BID. REFER TO 4/E101 FOR SUPPORT RACK REQUIREMENTS. MOUNT GEAR / DEVICE TO NORTH YARD WALL BY BID ALTERNATE NO. 1. COORDINATE YARD WALL MOUNTING LOCATION WITH ARCHITECT.
3. EXISTING TRANSFORMER POLE TO REMAIN. EXISTING POLE MOUNTED TRANSFORMER TO BE REPLACED BY AEP AT APPROPRIATE TIME.
4. EXISTING OVERHEAD SECONDARY TO BE REMOVED BY AEP AFTER NEW RESTROOM BUILDING IS COMPLETE AND READY TO BE ENERGIZED.
5. NEW SECONDARY OVERHEAD FEEDER BY AEP.
6. NEW SECONDARY DIP POLE BY AEP.
7. CONDUIT, TRENCH, AND BACKFILL BY CONTRACTOR FOR SECONDARY CONDUCTORS BY AEP.
8. REFER TO 2/E101 FOR REQUIREMENTS.
9. SWITCHGEAR SUPPORT RACK BY CONTRACTOR. REFER TO 3/E101 FOR GENERAL REQUIREMENTS.
10. SERVICE ENTRANCE FEEDER BY CONTRACTOR.
11. 30A., 250V., 2P, NF, NEMA-4X STAINLESS STEEL, DOUBLE THROW DISCONNECT SWITCH WITH SOLID NEUTRAL BAR AND SEPARATE GROUND BUS.
12. LIFT STATION CONTROL PANEL FURNISHED BY LIFT STATION CONTRACTOR AND INSTALLED BY ELECTRICAL CONTRACTOR. PROVIDE CONDUIT AND CONDUCTOR EXTENSIONS AS REQUIRED. REFER TO 4/E101 FOR ADDITIONAL REQUIREMENTS.
13. COORDINATE RECEPTACLE TYPE / CONFIGURATION WITH INSTALLED TPWD PORTABLE GENERATOR RECEPTACLE CORD CAP. REFER TO 4/E101 LIFT STATION CONTROL PANEL NOTES 8 AND 9 FOR ADDITIONAL REQUIREMENTS. PROVIDE WEATHERPROOF ENCLOSURE AND RAINTIGHT WHILE IN USE COVERPLATE FOR RECEPTACLE.

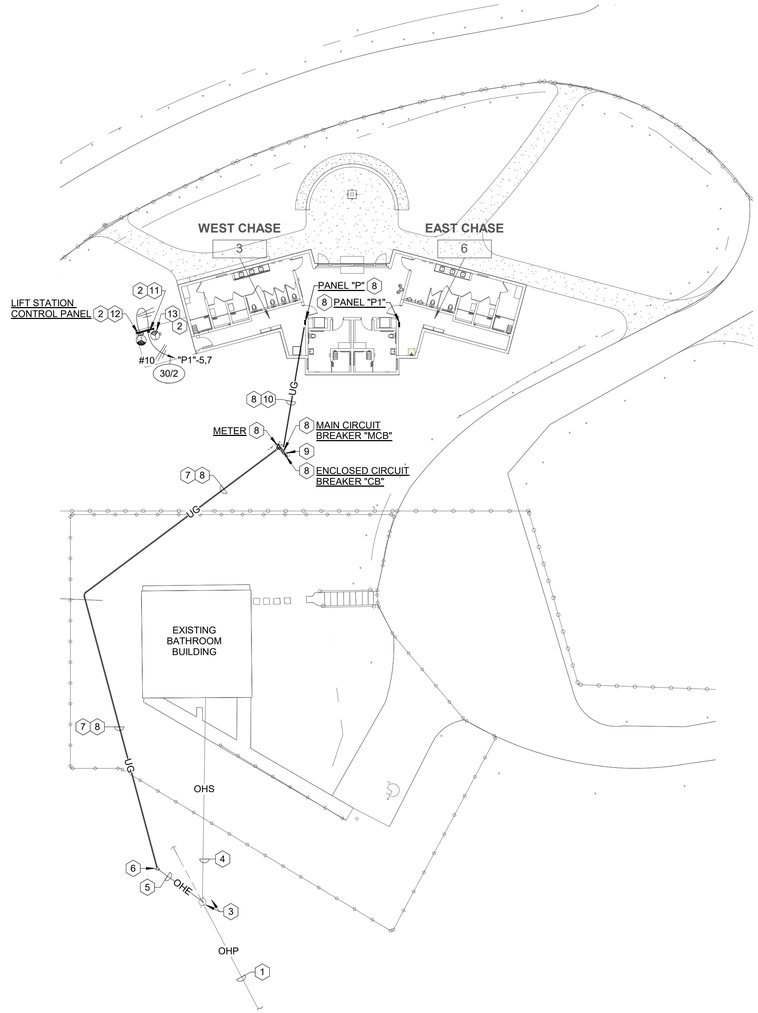

1 ELECTRICAL SITE PLAN
1" = 20'-0"

LIFT STATION CONTROL PANEL NOTES:

1. INSTALL A NEMA 4X JUNCTION BOX WITH BACKING PLATE BELOW THE CONTROL PANEL ON THE SAME COMMON RACK SYSTEM. SIZE BOX PER N.E.C. FOR THE CONDUIT SIZES AND NUMBER OF CONDUCTORS & TERMINATIONS IN THE BOX. DOOR SHALL BE HINGED, NEOPRENE GASKETED, AND EQUIPPED WITH PAD LOCKABLE CLOSING HARDWARE. ALL POWER, CONTROL, AND GROUNDING TERMINAL BLOCKS SHALL HAVE A SUFFICIENT NUMBER AND SIZE OF TERMINATION POINTS FOR SINGLE POINT CONNECTION OF ALL CONDUCTORS.

   A. INSTALL TERMINAL BLOCKS ON THE BACK PANEL OF THE J-BOX.

   B. THE TERMINAL BLOCKS SHALL BE PRESSURE PLATE DIN RAIL TYPE TERMINAL BLOCKS AND THESE SHALL BE USED FOR THE TERMINATION OF ANY SINGLE-CONDUCTOR CONTROL PANEL WIRING THAT ROUTES TO THE WET WELL AND FOR THE WIRES IN THE CABLES FROM THE FLOAT SWITCHES AND PUMPS IN THE WET WELL.

   C. ALL POWER, CONTROL, AND GROUNDING TERMINAL BLOCKS SHALL HAVE A SUFFICIENT NUMBER AND SIZE OF TERMINATION POINTS FOR SINGLE POINT CONNECTION OF ALL CONDUCTORS. PROVIDE THE TERMINAL BLOCK MANUFACTURER'S JUMPER TABS FOR ANY TERMINATIONS THAT REQUIRE MULTIPLE WIRE CONNECTIONS SUCH AS GROUND WIRES.

   D. PROVIDE A SEPARATE GROUND BUSS FOR THE TERMINATION OF ALL EQUIPMENT GROUNDING CONDUCTORS.

   E. PERMANENTLY IDENTIFY THE TERMINAL BLOCKS AND THE CONDUCTORS WITH WIRE MARKERS EQUAL TO BRADY. THE IDENTIFICATION NUMBERING SHALL MATCH THE WIRE NUMBERS SHOWN ON THE CONTROL PANEL FABRICATOR'S SCHEMATIC DIAGRAM FOR THE CONTROL PANEL.

2. FOR THESE TWO CONDUITS: AT THE WET WELL INSTALL SCHEDULE 40 GALVANIZED CONDUIT TO A MINIMUM OF 6" FROM THE WET WELL. BETWEEN THE CONTROL PANEL AND WET WELL PVC CONDUIT MAY BE INSTALLED BELOW GRADE PER NEC REQUIREMENTS.

3. PROVIDE RMC NIPPLES WITH A CONDUIT SEAL FITTING (TO BE FILLED WITH CHICO SEALING COMPOUND) BETWEEN THE J-BOX AND CONTROL PANEL. SINGLE CONDUCTORS SHALL BE INSTALLED FROM THE CONTROL PANEL TO THE JUNCTION BOX TERMINAL STRIPS AND GROUND BUSS.

4. IN THE J-BOX AND IN THE WET WELL: SEAL THE CONDUITS FROM THE J-BOX TO THE WET WELL WITH DUCT SEAL OR HARD SETTING CLOSED CELL FOAM TO PREVENT THE TRANSMISSION OF CORROSIVE GASES FROM THE WET WELL.

5. ALL RIGID METAL CONDUITS SHALL BE CORROSION PROTECTED BELOW GRADE OR IN CONTACT WITH A CONCRETE PAD OR FOOTING. WRAP THESE RMC CONDUITS WITH SCOTCHWRAP 50 CORROSION PROTECTION TAPE TO A MINIMUM OF 6" ABOVE GRADE OR ABOVE A CONCRETE PAD OR FOOTING.

6. INSTALL A NEMA 4X JUNCTION BOX WITH INTERIOR BACK PANEL FOR THE PROPER TERMINATION OF THE POWER WIRING AND LIGHTNING/SURGE PROTECTION WIRING FOR THE LIFT STATION / MAIN CIRCUIT BREAKER. THE JUNCTION BOX SHALL BE SIZED PER N.E.C. TO PROPERLY ACCEPT THE NUMBER AND SIZES OF WIRING INSTALLED IN THE BOX. DOOR SHALL BE HINGED, NEOPRENE GASKETED, AND EQUIPPED WITH PAD LOCKABLE CLOSING HARDWARE. ALL TERMINAL BLOCKS INSTALLED IN THIS JUNCTION BOX SHALL HAVE A SUFFICIENT NUMBER AND SIZE OF TERMINATION POINTS FOR SINGLE POINT CONNECTION OF ALL CONDUCTORS. PERMANENTLY IDENTIFY EACH GROUP OF POWER TERMINAL BLOCKS TO SHOW THE USE OF THE BLOCKS. PERMANENTLY IDENTIFY THE CONDUCTORS WITH WIRE MARKERS EQUAL TO BRADY. INSTALL THE FOLLOWING ON THE INTERIOR BACK PANEL:

   A. PRESSURE PLATE DIN RAIL TERMINAL BLOCKS OR POWER TERMINAL BLOCKS FOR THE TERMINATION OF THE POWER WIRING, SURGE PROTECTOR WIRING, AND LIGHTING ARRESTOR WIRING.
   B. EQUIPMENT GROUND BAR.
   C. ISOLATED GROUND BAR FOR GROUNDING ELECTRODE CONDUCTOR, SURGE PROTECTOR, AND LIGHTNING ARRESTOR GROUND. NOTE: THIS ENTIRE SYSTEM MUST BE ISOLATED.
   D. MOUNT THE SURGE PROTECTOR AND THE LIGHTING ARRESTOR TO THE BOTTOM OF THE JUNCTION BOX.
   E. INSTALL 1/2" PVC FOR THE #6 AWG, INSULATED GROUNDING ELECTRODE CONDUCTOR (GEC). ATTACH THE GEC TO THE GROUND ROD USING AN EXOTHERMIC WELD.
   F. SUPPLY A COMMERCIAL GRADE LIGHTNING PROTECTOR WITH NEUTRAL AND GROUND WIRES AND SUPPLY A SURGE CAPACITOR WITH NEUTRAL AND GROUND WIRES AS DETERMINED BY THE VOLTAGE RATING OF THE ELECTRICAL SERVICE TO THE LIFT STATION EQUIPMENT. PROVIDE DELTA LIGHTNING ARRESTORS MODEL #LA 302G LIGHTNING PROTECTOR WITH NEUTRAL AND GROUND AND MODEL #CA 302RG SURGE CAPACITOR.

7. THE NEW DOUBLE-THROW, NON-FUSED DISCONNECT SWITCH SHALL MATCH THE RATING OF THE PUMPING SYSTEM AND SHALL BE SUPPLIED WITH A SOLID NEUTRAL BAR AND A SEPARATE GROUND BUSS. SUPPLY THIS SWITCH IN A NEMA 4X STAINLESS STEEL ENCLOSURE. CONNECT THE NORMAL POWER FEED TO THE TOP OF THE SWITCH, THE GENERATOR RECEPTACLE FEED TO THE BOTTOM OF THE SWITCH, AND THE LOAD WIRING TO THE CENTER CONNECTIONS IN THE SWITCH.

8. THE NEW GENERATOR RECEPTACLE SHALL MATCH THE RATING OF THE PUMPING SYSTEM. THE RECEPTACLE SHALL BE A PIN AND SLEEVE STYLE RECEPTACLE OR TWIST-LOCK STYLE RECEPTACLE WITH A SEPARATE GROUND CONNECTION. PIN AND SLEEVE RECEPTACLES SHALL HAVE STYLE 2 CONNECTIONS PROVIDING FOR A SEPARATE GROUND WIRE PIN CONNECTION IN THE RECEPTACLE AND IN THE MATING PLUG. THE GENERATOR RECEPTACLE SHALL BE SUPPLIED IN A WEATHERPROOF BOX WITH A WEATHERPROOF COVER.

9. THE NEW GENERATOR RECEPTACLE SHALL MATCH THE MATING PLUG THAT IS INSTALLED ON TPWD'S EXISTING TRAILER MOUNTED GENERATOR. THE CONTRACTOR SHALL COORDINATE THAT THE LIFT STATION GENERATOR RECEPTACLE MATES WITH TPWD'S GENERATOR MATING PLUG.

LINETYPE LEGEND (LIFT STATION SWITCHGEAR MOUNTING DETAIL)	
— —	FURNISHED BY LIFT STATION CONTRACTOR AND INSTALLED BY ELECTRICAL CONTRACTOR.
———	FURNISHED AND INSTALLED BY ELECTRICAL CONTRACTOR.

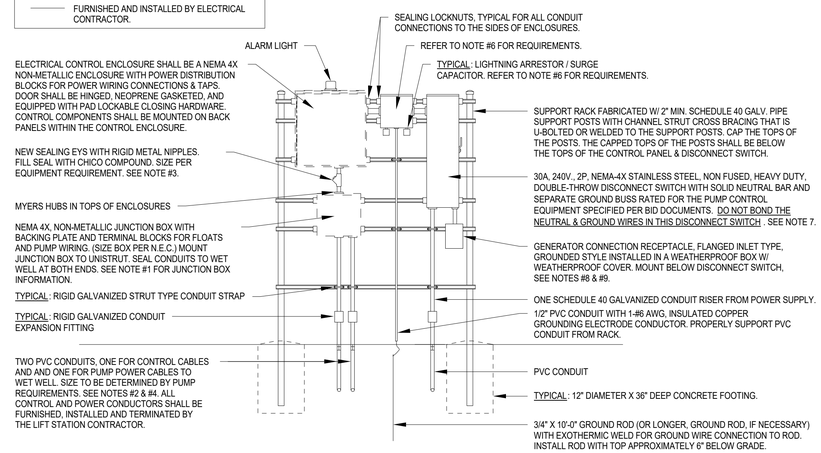

4 LIFT STATION / SWITCHGEAR MOUNTING DETAIL
N.T.S.

CONNECTED LOAD SUMMARY

LIGHTING	0.7	[KVA]
*MISC. 1Ø	11.7	[KVA]
MISC. EQUIPMENT	34.8	[KVA]
A/C LOADS:		
SPACE HEATING	16.0	[KVA]
VENTILATION	2.8	[KVA]
ESTIMATED TOTAL CONNECTED LOAD	66.0	[KVA]

*N.E.C. PERMITTED DIVERSITY HAS BEEN REMOVED FROM LOAD QUANTITY INDICATED.

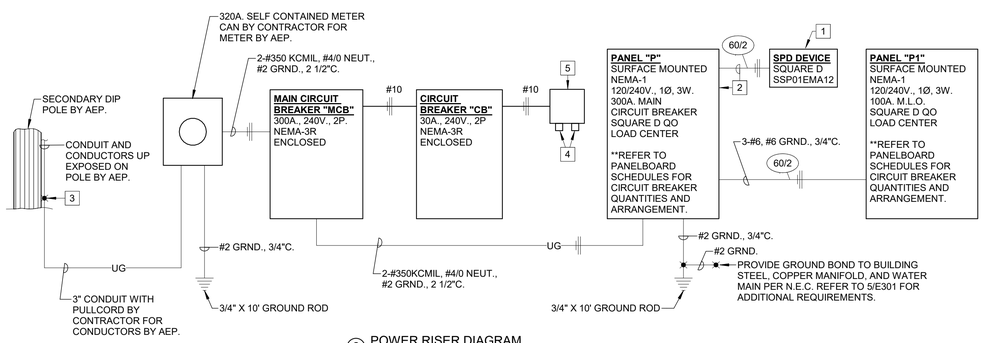

2 POWER RISER DIAGRAM
N.T.S.

NOTES: (POWER RISER DIAGRAM)

1. MOUNTED ADJACENT TO OR ABOVE GEAR TO BE PROJECTED. CONDUCTOR LENGTH SHALL BE AS SHORT AS POSSIBLE.
2. PROVIDE CIRCUIT BREAKER, CONDUIT, AND CONDUCTORS AS REQUIRED BY SPD DEVICE.
3. COORDINATE TERMINATION OF CONDUIT BY CONTRACTOR TO CONDUIT BY AEP WITH AEP.
4. LIGHTNING ARRESTOR / SURGE CAPACITOR. REFER TO 4/E101 NOTE #6 FOR REQUIREMENTS.
5. REFER TO 4/E101 NOTE 6 FOR REQUIREMENTS.

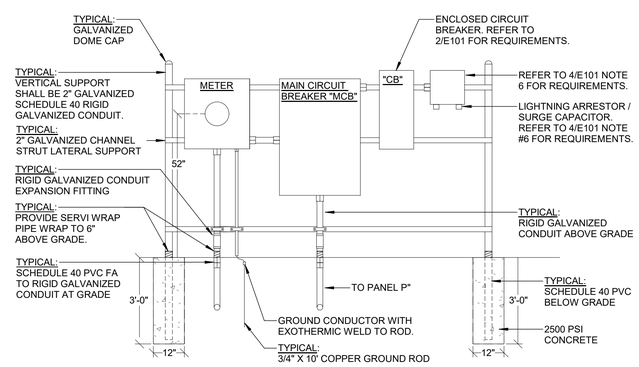

3 SWITCHGEAR SUPPORT RACK DETAIL
N.T.S.

TEXAS PARKS & WILDLIFE

RICHTER ARCHITECTS

LAKE CORPUS CHRISTI STATE PARK
RESTROOM REPLACEMENT
PROJECT NUMBER 1210196A

DATE: 12-04-2020
DESIGNED BY: M.K.
DRAWN BY: A.F.
REVIEWED BY: M.K.
REVISED:
REVISED:
REVISED:
PHASE: 100% CONSTRUCTION DOCUMENTS

SHEET TITLE
ELECTRICAL SITE PLAN

SHEET NUMBER
E101

STATE OF TEXAS
SCOTT E. STRIDDE
84831
LICENSED
PROFESSIONAL ENGINEER
12/04/2020

STRIDDE, CALLINS & ASSOCIATES INC.
CONSULTING ENGINEERS
MECHANICAL ELECTRICAL
(361) 883-9199
Fax (361) 883-9177
342 S. Navigation Blvd.
Corpus Christi, TX 78405-3618
Registration # F-006328

LIGHTING FIXTURE SCHEDULE

MARK	BRAND	CATALOG REFERENCE	LAMPS	BALLAST / DRIVER VOLTAGE	BODY	DIFFUSER	MOUNTING	REMARKS
A	KENALL	MO13BD PP SL 10L35K	LED FURNISHED 10[W],35K	120VOLT	DIE-CAST ALUMINUM SILVER POLYCARBONATE	PEARLESCENT POLYCARBONATE	SURFACE WALL OR CEILING	
B	LITHONIA	CLX L48 5000LM SEF FDL GZ10 40K 80CRI WH	LED FURNISHED 35[W],40K	MVOLT	WHITE ENAMEL	ACRYLIC	SURFACE	COORDINATE LOCATION WITH HVAC DUCTING, PIPING ETC.
C	HYDREL	4451 A LED WHT30K LLV LPI DNA	LED FURNISHED 15[W],30K	MVOLT	CAST ALUMINUM	CLEAR TEMPERED GLASS	RECESSED - CAST IN WALL	MOUNT FIXTURE AT 2' (TOP OF FIXTURE) ABOVE FINISHED GRADE / STEP TO CENTER OF FIXTURE.
D	KENALL	MO13ED PP SL 10L35K	LED FURNISHED 10[W],35K	120VOLT	DIE-CAST ALUMINUM SILVER POLYCARBONATE	PEARLESCENT POLYCARBONATE	SURFACE WALL OR CEILING	
D1	KENALL	MO13ED PP SL 10L35K LEL	LED FURNISHED 10[W],35K	120VOLT	DIE-CAST ALUMINUM SILVER POLYCARBONATE	PEARLESCENT POLYCARBONATE	SURFACE / WALL	PROVIDE WITH FACTORY INSTALLED BATTERY PACK.
EM	LITHONIA	AFF OEL DNAXD LTP SDRT WT	LED FURNISHED	NONE	NATURAL ALUMINUM	ACRYLIC	SURFACE	
XA	LITHONIA	LQM S W 3 R EL N SD	L.E.D. FURNISHED	MVOLT	WHITE THERMOPLASTIC	NONE	SURFACE	

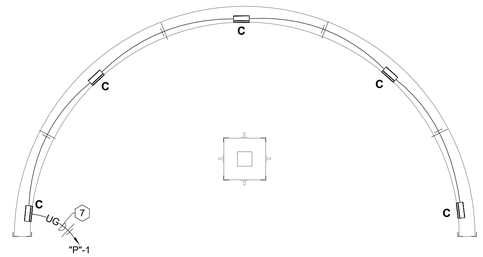

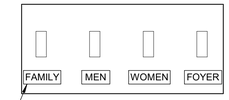

TYPICAL:
PROVIDE 1/8" THICK WHITE PLASTIC LABEL WITH BLACK SUNKEN LETTERS (1/4" FONT). ATTACH EACH TO COVERPLATE WITH DURABLE ADHESIVE AT LOCATION WHICH DOES NOT OBSTRUCT COVERPLATE SCREWS.

2 SWITCH BANK LABELING DETAIL
N.T.S.

OCCUPANCY SENSOR SCHEDULE

MARK	DESCRIPTION	MANUFACTURER / MODEL NO.
OG	CORNER MOUNTED LINE VOLTAGE OCCUPANCY SENSOR "G"	LEVITON NO. ODWWV-IDW

OCCUPANCY SENSOR GENERAL NOTES:

1. ALL MOTION SENSORS SHALL BE INSTALLED OR MOUNTED TO A JUNCTION BOX.
2. ALL MOTION SENSORS SHALL BE MOUNTED AT LEAST 4'-0" AWAY FROM HVAC SUPPLY GRILLES.

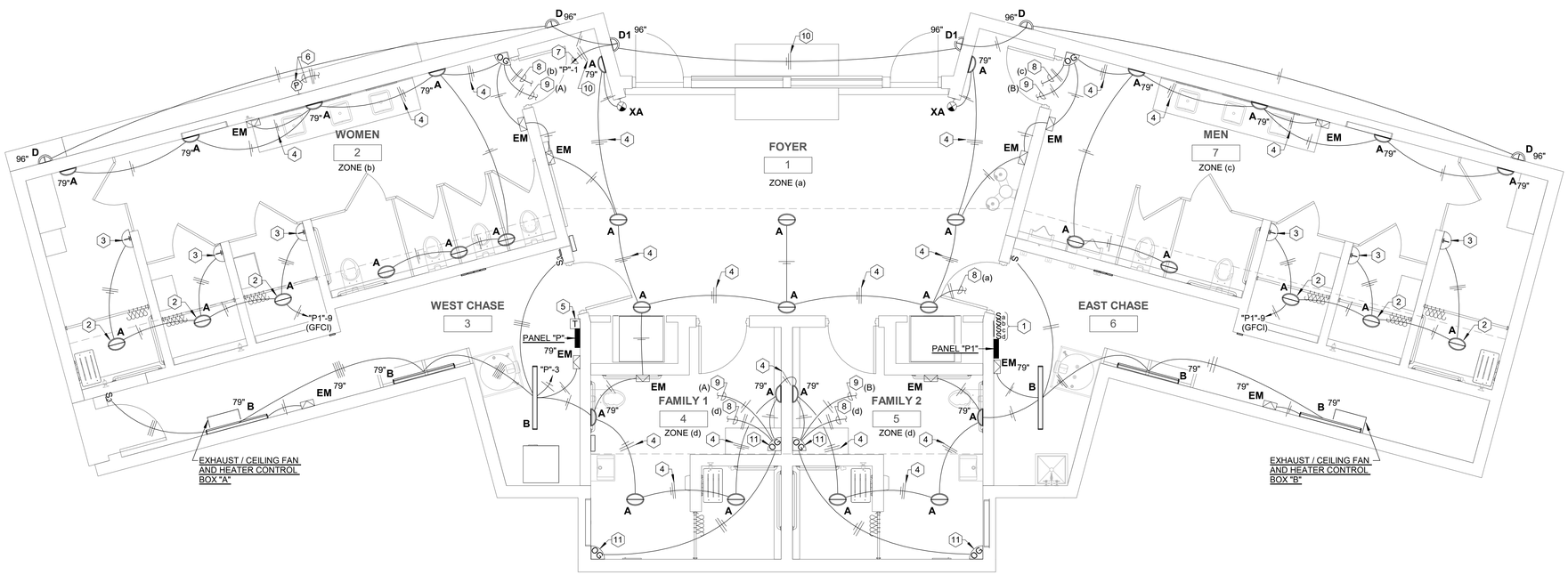

1 ELECTRICAL LIGHTING FLOOR PLAN
1/4" = 1'-0"

GENERAL NOTES:

A. INFORMATION INCLUDED ON THIS DRAWING IS INTENDED TO INDICATE THE GENERAL CHARACTER AND EXTENT OF WORK REQUIRED. REFER TO SPECIFICATIONS FOR ADDITIONAL REQUIREMENTS.
B. PROJECT DESIGN IS BASED UPON 2020 NFPA 70 AND 2018 IECC.

KEYED NOTES:

1. FOUR (4) - GANG SWITCH BOX. PROVIDE SINGLE POLE SWITCH FOR EACH ZONE (INDICATED). EACH SWITCH SHALL ENABLE / DISABLE ALL LIGHTING FIXTURES IN ZONE (INDICATED). REFER TO 2/E201 FOR SWITCH BANK LABELING REQUIREMENTS.
2. LIGHTING CONTROL IN SHOWER AREAS SHALL BE BY INDICATED TIMER SWITCH CONTROL.
3. MECHANICAL TIMER SHALL BE INTERMATIC CAT. NO. FF60MC OR APPROVED EQUAL. PROVIDE IN-USE WEATHERPROOF COVER FOR DEVICE.
4. UNSWITCHED CONDUCTOR.
5. TIMECLOCK SHALL BE INTERMATIC CAT. NO. T171CR.
6. PHOTOELECTRIC CELL SHALL BE INTERMATIC CAT. NO. K4321C. SERIES CONNECT WITH TIMECLOCK AS REQUIRED FOR PHOTOCELL "ON" / TIMECLOCK "OFF" OPERATION.
7. ROUTE CONDUIT AND CONDUCTORS THROUGH TIMECLOCK.
8. ROUTE CONDUIT AND CONDUCTORS TO DESIGNATED CONTROL DEVICE (INDICATED) IN WEST CHASE 6. TERMINATE CONDUCTORS TO CONTROL DEVICE AS REQUIRED.
9. ROUTE CONDUIT AND CONDUCTORS TO EXHAUST / CEILING FAN AND HEATER CONTROL BOX (INDICATED).
10. DERIVE UNSWITCHED CONDUCTOR FROM LINE SIDE OF TIMECLOCK.
11. PARALLEL CONNECT SENSORS FOR COMMON SPACE CONTROL BY EITHER SENSOR.

STATE OF TEXAS
SCOTT E. STRIDDE
84831
LICENSED
PROFESSIONAL ENGINEER
12/04/2020

STRIDDE, CALLINS & ASSOCIATES INC.
CONSULTING ENGINEERS
MECHANICAL ELECTRICAL
(361) 883-9199
Fax (361) 883-9197
342 S. Navigation Blvd.
Corpus Christi, TX 78405-3618
Registration # F-006328

TEXAS PARKS & WILDLIFE

RICHTER ARCHITECTS

LAKE CORPUS CHRISTI STATE PARK
RESTROOM REPLACEMENT
PROJECT NUMBER 1210196A

DATE: 12-04-2020
DESIGNED BY: A.F.
DRAWN BY: A.F.
REVIEWED BY: M.K.
REVISED:
REVISED:
REVISED:
PHASE: 100% CONSTRUCTION DOCUMENTS

SHEET TITLE
ELECTRICAL LIGHTING PLAN

SHEET NUMBER
E201

ELECTRICAL LEGEND

NOTE: THIS IS A STANDARD LEGEND. ALL SYMBOLS AND ABBREVIATIONS HEREIN MAY NOT BE APPLICABLE TO THIS PROJECT.

SYMBOL	DESCRIPTION
	CEILING OUTLET WITH FIXTURE AS SCHEDULED
	WALL OUTLET WITH SURFACE MOUNTED FIXTURE AS SCHEDULED
S	WALL SWITCH - REFER TO WIRING DEVICE SCHEDULE
	RECEPTACLE - REFER TO WIRING DEVICE SCHEDULE
	DISCONNECT SWITCH
P	PHOTOELECTRIC SWITCH - REFER TO DRAWING NOTES FOR REQUIREMENTS
T	CONTROL TIME CLOCK - REFER TO DRAWING NOTES FOR REQUIREMENTS
J	JUNCTION BOX
	120 VOLT SINGLE PHASE CONNECTION TO EQUIPMENT NOTED
	208 VOLT OR 240 VOLT SINGLE PHASE CONNECTION TO EQUIPMENT NOTED
	CONTROL OUTLET AND CONNECTIONS AS REQUIRED
24	24 VOLT CONNECTION TO DEVICE NOTED
WP	WEATHERPROOF DEVICE OR ENCLOSURE
EWH	ELECTRIC WATER HEATER

SYMBOL	DESCRIPTION
	RACEWAY WITH NUMBER OF CONDUCTORS INDICATED
UG	UNDERGROUND RACEWAY
LA1,2	PANEL AND CIRCUIT NUMBERS ARROWS INDICATE HOME RUN TO PANEL
1"	CONDUIT SIZE IF INDICATED
30/2	BRANCH CIRCUIT BREAKER SIZE IN PANEL INDICATED IF OTHER THAN 1P20A
	NEUTRAL CONDUCTOR
	UNGROUNDED CONDUCTORS
#10	CONDUCTOR SIZE INDICATED IF OTHER THAN NO. 12 AWG
	CONDUCTORS SHALL BE SIZE INDICATED FOR ENTIRE LENGTH OF CIRCUIT
	CONDUIT CONTINUATION TO POINT NOTED
	ELECTRICAL BRANCH CIRCUIT PANEL AS NOTED
HD	HAND DRYER
T	HVAC SENSOR. REFER TO DRAWINGS FOR ADDITIONAL REQUIREMENTS

WIRING DEVICE LEGEND AND SCHEDULE

SYMBOL	CHARACTERISTICS	RATING		DESCRIPTION	MANUFACTURER'S REFERENCE			REMARKS
		VOLTS	AMPS		P. & S.	HUBBELL	LEVITON	
S	SPST	120-277	20	SINGLE POLE SWITCH	CSB20AC1	CSB120	CSB1-20	
	NEMA 5-20R	125	20	DUPLEX CONVENIENCE OUTLET	5362A	HBL5366	5366	
GFI	NEMA 5-20R	125	20	GFI RECEPTACLE	2095	GF5362	7899	
WP GFI	NEMA 5-20R	125	20	WEATHERPROOF GFI CONVENIENCE RECEPTACLE	2095	GF5362	7899	
	GENERATOR RECEPTACLE	125/250	-	-	XXXX	XXXXX	XXXX	REFER TO 4/E101 NOTES #8 AND #9 FOR REQUIREMENTS.

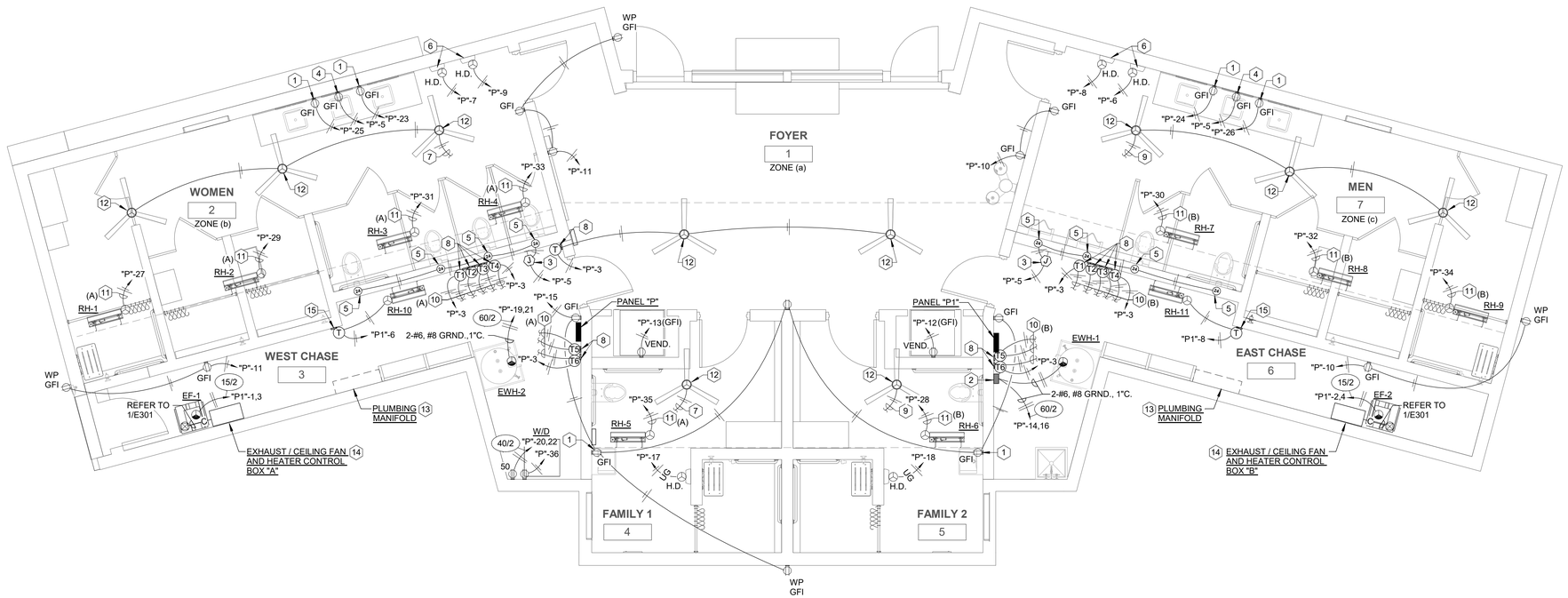

1 ELECTRICAL POWER FLOOR PLAN
1/4" = 1'-0"

GENERAL NOTES:

A. INFORMATION INCLUDED ON THIS DRAWING IS INTENDED TO INDICATE THE GENERAL CHARACTER AND EXTENT OF WORK REQUIRED. REFER TO SPECIFICATIONS FOR ADDITIONAL REQUIREMENTS.
B. PROJECT DESIGN IS BASED UPON 2020 NFPA 70 AND 2018 IECC.

KEYED NOTES:

1. MOUNT 2" ABOVE COUNTER / SPLASH OR 42" ABOVE FINISHED FLOOR. COORDINATE ELEVATION WITH ARCHITECT.
2. 60A., 250V., 2P, NF, NEMA-3R DISCONNECT SWITCH.
3. PROVIDE CONNECTION TO PLUMBING FIXTURE POWER SUPPLY COORDINATE LOCATION AND REQUIREMENTS WITH PLUMBING CONTRACTOR.
4. INSTALL DEVICE INDICATED BELOW COUNTER AT LOCATION SELECTED BY PLUMBING CONTRACTOR FOR PLUMBING FIXTURE MOTION SENSOR POWER SUPPLY.
5. PROVIDE CONDUCTORS AND TERMINATIONS TO PLUMBING FIXTURE MOTION SENSOR.
6. HAND DRYERS SHALL BE WORLD DRYER SLIMDRI #L-972.
7. ROUTE CONDUIT AND CONDUCTORS THROUGH LINE VOLTAGE THERMOSTAT T2 IN WEST CHASE 3.
8. LINE VOLTAGE THERMOSTAT WITH REMOTE SENSOR FURNISHED AND INSTALLED BY HVAC CONTRACTOR. PROVIDE CONDUIT AND CONDUCTORS INDICATED / REQUIRED TO EXHAUST / CEILING FAN AND HEATER CONTROL BOX. REFER TO DETAILS ON E301 FOR ADDITIONAL REQUIREMENTS.
9. ROUTE CONDUIT AND CONDUCTORS THROUGH LINE VOLTAGE THERMOSTAT T2 IN EAST CHASE 6.
10. ROUTE CONDUIT AND CONDUCTORS TO EXHAUST / CEILING FAN AND HEATER CONTROL BOX (INDICATED). TERMINATE IN CONTROL BOX PER EXHAUST / CEILING FAN CONTROL DETAIL OR HEATER CONTROL DIAGRAM AS REQUIRED.
11. ROUTE CONDUIT AND CONDUCTORS THROUGH EXHAUST / CEILING FAN AND HEATER CONTROL BOX (INDICATED). REFER TO DETAILS ON E301 FOR ADDITIONAL REQUIREMENTS.
12. PROVIDE MINKA AIRE CAT. NO. F787-SL 52", EXTERIOR RATED CEILING FAN WITH RC400 REMOTE CONTROL.
13. PROVIDE BOND TO COPPER MANIFOLD AS REQUIRED BY NEC. REFER TO DETAILS ON E301 FOR REQUIREMENTS.
14. ELECTRICAL CONTRACTOR SHALL PROVIDE BOX, CONTACTORS, CONDUCTORS, AND CONDUIT NECESSARY FOR CONTROL BOX INDICATED. REFER TO 1/E301, 2/E301, AND 3/E301 FOR CONTROL BOX REQUIREMENTS.
15. LINE VOLTAGE THERMOSTAT FURNISHED AND INSTALLED BY HVAC CONTRACTOR. PROVIDE LINE AND LOAD SIDE CONDUCTORS AS INDICATED.

TEXAS PARKS & WILDLIFE

RICHTER ARCHITECTS

LAKE CORPUS CHRISTI STATE PARK
RESTROOM REPLACEMENT
PROJECT NUMBER 1210196A

DATE: 12-04-2020
DESIGNED BY: A.F.
DRAWN BY: A.F.
REVIEWED BY: M.K.
REVISED:
REVISED:
REVISED:

PHASE: 100% CONSTRUCTION DOCUMENTS

SHEET TITLE
ELECTRICAL POWER PLAN

SHEET NUMBER
E202

STATE OF TEXAS
SCOTT E. STRIDDE
84831
LICENSED
PROFESSIONAL ENGINEER
12/04/2020

STRIDDE, CALLINS & ASSOCIATES INC.
CONSULTING ENGINEERS
MECHANICAL ELECTRICAL
(361) 883-9199
Fax (361) 883-9877
342 S. Navigation Blvd
Corpus Christi, TX 78405-3618
Registration # F-006328

CONTROL DIAGRAM LEGEND

L - LINE	NC - NORMALLY CLOSED
N - NEUTRAL	NO - NORMALLY OPEN
G - GROUND	B - SPEED 2
LD - LOAD	A - SPEED 1
COM - COMMON	CF - CEILING FAN

HR RH-'/' - HOME RUN CIRCUIT RADIANT HEATER #

T1 - LINE VOLTAGE THERMOSTAT #1 BY HVAC CONTRACTOR, REFER TO FLOOR PLANS FOR LOCATIONS.
T2 - LINE VOLTAGE THERMOSTAT #2 BY HVAC CONTRACTOR, REFER TO FLOOR PLANS FOR LOCATIONS.
T3 - LINE VOLTAGE THERMOSTAT #3 BY HVAC CONTRACTOR, REFER TO FLOOR PLANS FOR LOCATIONS.
T4 - LINE VOLTAGE THERMOSTAT #4 BY HVAC CONTRACTOR, REFER TO FLOOR PLANS FOR LOCATIONS.
T5 - LINE VOLTAGE THERMOSTAT #4 BY HVAC CONTRACTOR, REFER TO FLOOR PLANS FOR LOCATIONS.
T6 - LINE VOLTAGE THERMOSTAT #4 BY HVAC CONTRACTOR, REFER TO FLOOR PLANS FOR LOCATIONS.

C1: SQUARE D CLASS 8910, TYPE DP11V02, NORMALLY OPEN, 120V. COIL CONTACTOR.
C2: SQUARE D CLASS 8910, TYPE DP14V02 Y392, NORMALLY OPEN / CLOSED, 120V. COIL CONTACTOR.
C3: SQUARE D CLASS 8910, TYPE DPA14V02, NORMALLY OPEN, 120V. COIL CONTACTOR.

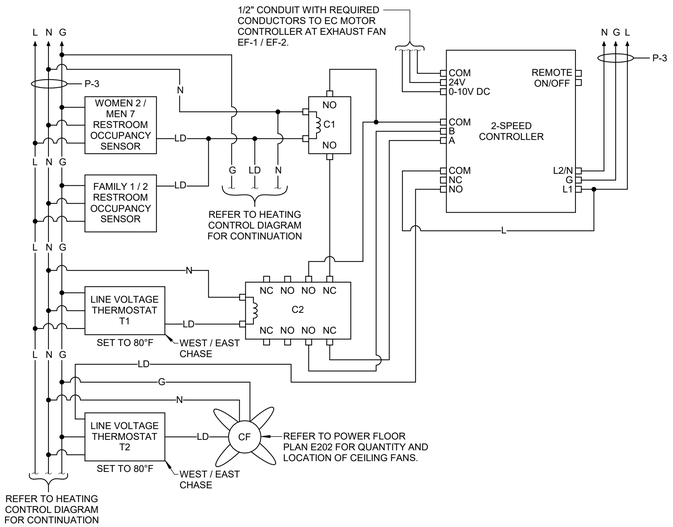

1 EXHAUST / CEILING FAN CONTROL DIAGRAM
N.T.S.

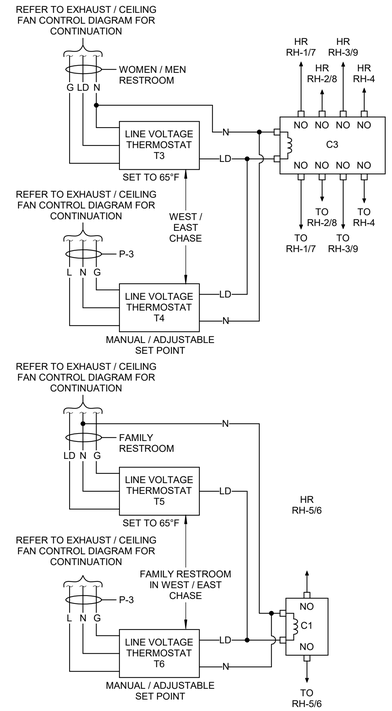

2 HEATING CONTROL DIAGRAM
N.T.S.

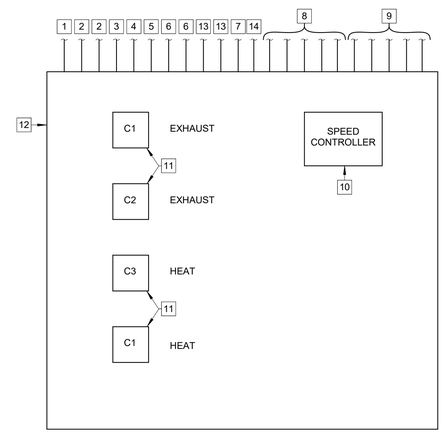

3 EXHAUST / CEILING FAN AND HEATER CONTROL BOX
N.T.S.

KEYED NOTES: (Exhaust / Ceiling Fan and Heater Control Box only)

1. 1/2" CONDUIT WITH 2 - #12, #12 GROUND TO PANEL "P", CIRCUIT 3, TO SERVE AS LINE AND CONTROL POWER.
2. 1/2" CONDUIT WITH 2 - #12, #12 GROUND FROM LOAD SIDE OF OCCUPANCY SENSORS IN WOMEN / MEN AND FAMILY 1 / FAMILY 2.
3. 1/2" CONDUIT WITH 2 - #12, #12 GROUND FROM LOAD SIDE OF LINE VOLTAGE THERMOSTAT T1.
4. 1/2" CONDUIT WITH 2 - #12, #12 GROUND FROM LINE SIDE OF LINE VOLTAGE THERMOSTAT T2.
5. 1/2" CONDUIT WITH REQUIRED CONDUCTORS TO EC MOTOR CONTROLLER AT EXHAUST FAN 1/2. COORDINATE CONDUCTOR REQUIREMENTS WITH HVAC CONTRACTOR.
6. 1/2" CONDUIT WITH 2 - #12, #12 GROUND TO / FROM LINE / LOAD SIDE OF LINE VOLTAGE THERMOSTAT T3 IN WEST / EAST CHASE.
7. 1/2" CONDUIT WITH 2 - #12, #12 GROUND FROM LOAD SIDE OF LINE VOLTAGE THERMOSTAT T4 IN WEST / EAST CHASE.
8. 1/2" CONDUIT WITH 2 - #12, #12 GROUND FROM PANEL "P" FOR RADIANT HEATER CIRCUIT.
9. 1/2" CONDUIT WITH 2 - #12, #12 GROUND TO RADIANT HEATER.
10. SPEED CONTROLLER FURNISHED BY HVAC CONTRACTOR AND INSTALLED BY ELECTRICAL CONTRACTOR. REFER TO HVAC CONTRACTOR FURNISHED WIRING DIAGRAMS FOR REQUIREMENTS.
11. REFER TO EXHAUST / CEILING FAN AND HEATER CONTROL DIAGRAMS FOR REQUIREMENTS.
12. 24"W X 24"H X 12" D NEMA-3R BOX WITH PIANO HINGE LOCKABLE COVER AND 18" X 18" REMOVABLE BACK MOUNTING PLATE WITH 1/4" STAND OFF FROM BACK OF BOX. ELECTRICAL CONTRACTOR SHALL PROVIDE ALL CONDUIT, CONDUCTORS, CONTACTORS, AND TERMINATIONS REQUIRED TO ACHIEVE CONTROL INDICATED ON EXHAUST / CEILING FAN AND HEATER CONTROL DIAGRAMS.
13. 1/2" CONDUIT WITH 2 - #12, #12 GROUND FROM LOAD SIDE OF LINE VOLTAGE THERMOSTAT T5 IN WEST / EAST CHASE.
14. 1/2" CONDUIT WITH 2 - #12, #12 GROUND FROM LOAD SIDE OF LINE VOLTAGE THERMOSTAT T6 IN WEST / EAST CHASE.

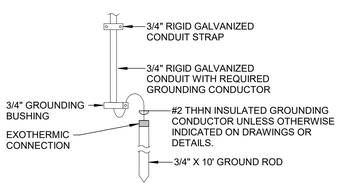

4 GROUND ROD DETAIL
N.T.S.

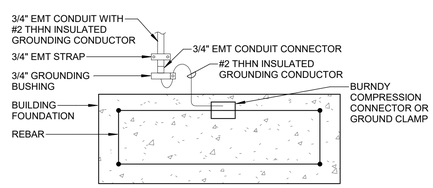

5 BUILDING FOUNDATION GROUNDING DETAIL
N.T.S.

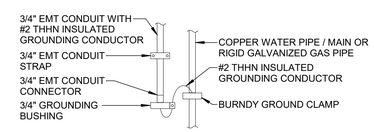

6 WATER / GAS MAIN GROUNDING DETAIL
N.T.S.

TEXAS PARKS & WILDLIFE

RICHTER ARCHITECTS

LAKE CORPUS CHRISTI STATE PARK
RESTROOM REPLACEMENT
PROJECT NUMBER 1210196A

DATE: 12-04-2020
DESIGNED BY: M.K.
DRAWN BY: A.F.
REVIEWED BY: M.K.
REVISED:
REVISED:
REVISED:
PHASE: 100% CONSTRUCTION DOCUMENTS

SHEET TITLE
ELECTRICAL WIRING DIAGRAMS AND DETAILS

SHEET NUMBER
E301

STATE OF TEXAS
SCOTT E. STRIDDE
84831
LICENSED
PROFESSIONAL ENGINEER
12/04/2020

STRIDDE, CALLINS & ASSOCIATES INC.
CONSULTING ENGINEERS
MECHANICAL ELECTRICAL
(361) 883-9199
Fax (361) 883-9197
342 S. Navigation Blvd
Corpus Christi, TX 78405-3618
Registration # F-006328

PANELBOARD SCHEDULE

JOB: TPWD LAKE CC RESTROOM CABINET: SURFACE MAINS: LUGS VOLTAGE: 120/240 SINGLE PHASE CAPACITY: 300A
PANEL: P SPECIAL FEATURES: NEMA-3R RATED ENCLOSURE

CKT	LOAD	C/B	LIGHTING	MISC 1Ø	MISC. EQPM.	KITCHEN EQPM.	CONTROL POWER	VENTILATION	A/C HEATING	CKT	LOAD	C/B	LIGHTING	MISC 1Ø	MISC. EQPM.	KITCHEN EQPM.	CONTROL POWER	VENTILATION	A/C HEATING
1	EXTERIOR LIGHTING	20/1	120							2	TVSS DEVICE	60/1							
3	INTERIOR LIGHTING AND CEILING FANS	20/1	500				100	500		4									
5	RESTROOM FIXTURE SENSORS RM: WOMEN RR, MEN RR	20/1		280						6	HAND DRYER RM: MEN RR	20/1		950					
7	HAND DRYER RM: WOMEN RR	20/1		950						8	HAND DRYER RM: MEN RR	20/1		950					
9	HAND DRYER RM: WOMEN RR	20/1		950						10	RECEPTACLES RM: FOYER, MEN RR, WEST CHASE, EXT.	20/1		800					
11	RECEPTACLES RM: FOYER, WOMEN RR, EAST CHASE, EXT.	20/1		1,000						12	VENDING MACHINE RM: FOYER	20/1 (GFCI)		1,200					
13	VENDING MACHINE RM:FOYER	20/1 (GFCI)		1,200						14	EWH-1 RM: WEST CHASE	60/2			12,500				
15	RECEPTACLES RM: 1,3,4,5,6, EXT.	20/1		1,200						16									
17	HAND DRYER RM: FAMILY 1	20/1		950						18	HAND DRYER RM: FAMILY 2	20/1		950					
19	EWH-2 RM: EAST CHASE	60/2			12,500					20	COMBINATION WASHER/DRYER RM: EAST CHASE	40/2			5,700				
21										22									
23	RECEPTACLE RM: WEST CHASE	20/1		200						24	RECEPTACLE RM: MEN RR	20/1		200					
25	RECEPTACLE RM: WEST CHASE	20/1		200						26	RECEPTACLE RM: MEN RR	20/1		200					
27	RH-1 RM: WOMEN RR	20/1							1,450	28	RH-6 RM: FAMILY 2	20/1							1,450
29	RH-2 RM: WOMEN RR	20/1							1,450	30	RH-7 RM: MEN RR	20/1							1,450
31	RH-3 RM: WOMEN RR	20/1							1,450	32	RH-8 RM: MEN RR	20/1							1,450
33	RH-4 RM: WOMEN RR	20/1							1,450	34	RH-9 RM: MEN RR	20/1							1,450
35	RH-5 RM: FAMILY 1	20/1							1,450	36	WASHER RM: EAST CHASE	20/1		1,200					
37	SPARE	20/1								38	SPARE	20/1							
39	SPARE	20/1								40	PANEL P1	60/2	60	0	4,080	0	0	2,260	2,900
41	SPARE	20/1								42									
		SUBTOTAL	620	6,930	12,500	0	100	500	7,250			SUBTOTAL	60	6,450	22,280	0	0	2,260	8,700
												TOTAL LOAD	680	13,380	34,780	0	100	2,760	15,950
												W=> DIV		11,690	W=> DIV	0	100		

TOTAL CONNECTED LOAD (VA) 67,650
DEMAND LOAD (VA) 65,960
AMPACITY DEMAND 274.8 A

PANELBOARD SCHEDULE

JOB: TPWD LAKE CC RESTROOM CABINET: SURFACE MAINS: LUGS VOLTAGE: 120/240 SINGLE PHASE CAPACI... 100A
PANEL: P1 SPECIAL FEATURES: NEMA-3R RATED ENCLOSURE

CKT	LOAD	C/B	LIGHTING	MISC 1Ø	MISC. EQPM.	KITCHEN EQPM.	CONTROL POWER	VENTILATION	A/C HEATING	CKT	LOAD	C/B	LIGHTING	MISC 1Ø	MISC. EQPM.	KITCHEN EQPM.	CONTROL POWER	VENTILATION	A/C HEATING
1	EF-1 RM: EAST CHASE	15/2						1,130		2	EF-2 RM: WEST CHASE	15/2						1,130	
3										4									
5	LIFT STATION	30/2			4,080					6	RH-10 RM: EAST CHASE	20/1							1,450
7										8	RH-11 RM: WEST CHASE	20/1							1,450
9	SHOWER LIGHTING	20/1 (GFCI)	60							10	SPARE	20/1							
11	SPARE	20/1								12	SPARE	20/1							
13	SPACE									14	SPACE								
15	SPACE									16	SPACE								
		SUBTOTAL	60	0	4,080	0	0	1,130	0			SUBTOTAL	0	0	0	0	0	1,130	2,900
												TOTAL LOAD	60	0	4,080	0	0	2,260	2,900
												W=> DIV		0	W=>...	0	0		

TOTAL CONNECTED LOAD (VA) 9,300
DEMAND LOAD (VA) 7,040
AMPACITY DEMAND 29.3 A

TEXAS PARKS & WILDLIFE

RICHTER ARCHITECTS

LAKE CORPUS CHRISTI STATE PARK
RESTROOM REPLACEMENT
PROJECT NUMBER 1210196A

DATE: 12-04-2020
DESIGNED BY: A.F.
DRAWN BY: A.F.
REVIEWED BY: M.K.
REVISED:
REVISED:
REVISED:
PHASE: 100% CONSTRUCTION DOCUMENTS

SHEET TITLE
ELECTRICAL PANELBOARD SCHEDULES

SHEET NUMBER
E302

STATE OF TEXAS
SCOTT E. STRIDDE
84831
LICENSED
PROFESSIONAL ENGINEER
12/04/2020

STRIDDE, CALLINS & ASSOCIATES INC.
CONSULTING ENGINEERS
MECHANICAL ELECTRICAL
(361) 883-9199
Fax (361) 883-9197
342 S. Navigation Blvd
Corpus Christi, TX 78405-3618
Registration # F-006328