NORTH

COUNTY LOCATION MAP

NOT TO SCALE

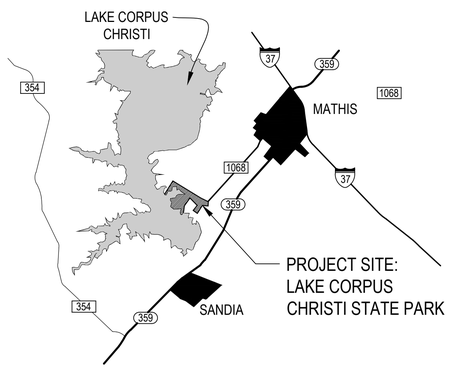

NORTH

VICINITY MAP

NOT TO SCALE

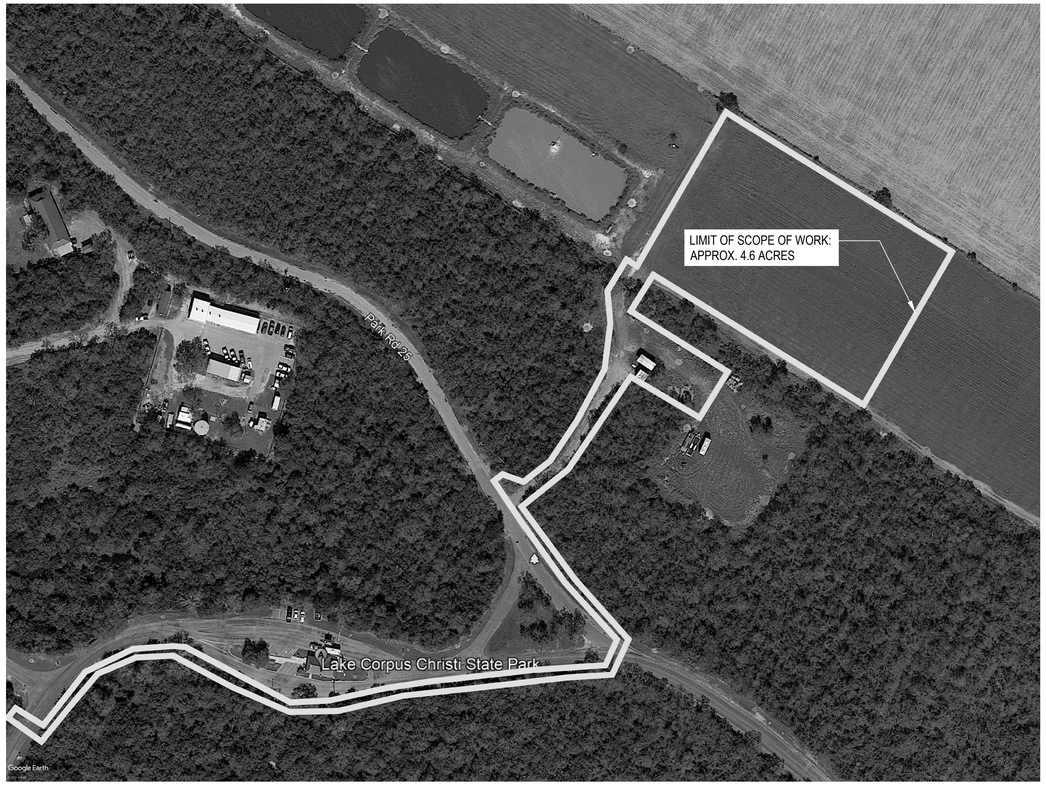

NORTH

SITE LOCATION MAP

NOT TO SCALE

SITE ADDRESS:
MATHIS FISHERIES OFFICE
23194 PARK RD 25
MATHIS, TX 78368

DESIGN TEAM

ARCHITECTURE
Ramy Ghebranious
PDG ARCHITECTS
10000 RICHMOND, #100
HOUSTON, TX 77042
713-629-6100
rghebranious@pdgarchitects.com

CIVIL ENGINEER
Robert Hill
OMEGA ENGINEERING
16360 PARK TEN PLACE
HOUSTON, TX 77084
281-647-9182
rhill@omegaengineers.com

LANDSCAPE ARCHITECT
Ed Wong
WONG & ASSOCIATES, INC
5207 SPRUCE ST
BELLAIRE, TX 77401
713-777-9198
Ezwong@aol.com

MEP ENGINEER
Derek Gaskamp
INFINITY MEP CONSULTANTS
5600 NW CENTRAL DR. #280
HOUSTON, TX 77092
832-530-4523
DGaskamp@InfinityMEP.com

STRUCTURAL ENGINEER
Luis Martinez
ASA DALLY
9800 RICHMOND AVE, #460
HOUSTON, TX 77042
713-337-8881
lmartinez@asadally.com

PROJECT

MATHIS FISHERIES OFFICE

MATHIS, TX, 78368

PROJECT NO: 127144 DATE: APRIL 23, 2021

INDEX OF DRAWINGS

SHEET NO.	DESCRIPTION
G000	COVER
G001	CODE AND GENERAL INFORMATION
G002	TAS INFORMATION
G003	LIFE SAFETY PLAN
C.001	CIVIL LAYOUT
C.002	SITE CONTROL
C.003	SITE GRADING
C.004	DRIVEWAY PLAN
C.005	SITE PAVEMENT PLAN AND DETAILS
C.006	SITE UTILITIES
C.007	WATERLINE PLAN
C.008	DETAILS
C.009	DETAILS
C.010	DETAILS
C.011	DETAILS
L1.1	LANDSCAPE PLAN
L2.1	IRRIGATION PLAN
AS01	SITE DEVELOPMENT PLAN
AS02	TRAILER COVERED PARKING PLANS
AS03	TRAILER CANOPY ELEV. AND SECTIONS
AS04	SITE DETAILS
A101	ROOF PLAN
A201	FLOOR PLAN
A301	REFLECTED CEILING PLAN
A401	BUILDING ELEVATIONS
A402	BUILDING ELEVATIONS
A501	BUILDING SECTIONS & WALL TYPES
A701	ENLARGED PLAN & DETAIL
A702	INTERIOR ELEVATIONS
A703	INTERIOR ELEVATIONS
A801	DOOR & WINDOW SCHEDULES
A901	FINISH SCHEDULES & MILLWORK DETAILS
S101	STRUCTURAL GENERAL CRITERIA
S102	STRUCTURAL GENERAL CRITERIA
S201	FOUNDATION PLAN
S202	CARPORT FOUNDATION PLAN
S301	TYPICAL PLINTH & DRILLED PIERS DETAILS
S401	FOUNDATION DETAILS
S402	FOUNDATION DETAILS
M0.01	MECHANICAL COVER SHEET
M0.02	MECHANICAL SCHEDULES
M2.01	MECHANICAL PLAN
M2.02	MECHANICAL CEILING COORDINATION PLAN
M6.01	MECHANICAL DETAILS
M6.02	MECHANICAL DETAILS
M6.03	MECHANICAL DETAILS
M7.01	MECHANICAL CONTROLS
E0.01	ELECTRICAL COVER SHEET
E1.01	ELECTRICAL SITE PLAN
E2.01	POWER PLAN
E2.02	POWER EQUIPMENT PLAN
E3.01	LIGHTING PLAN
E3.02	LIGHTING PLAN
E4.01	LOW VOLTAGE PLAN
E6.01	ELECTRICAL DETAILS
E6.02	ELECTRICAL DETAILS
E6.03	ELECTRICAL DETAILS
E7.00	PANEL SCHEDULES & RISER
P0.01	PLUMBING COVER SHEET
P0.02	PLUMBING SCHEDULES
P1.01	PLUMBING UNDERFLOOR PLAN
P2.01	PLUMBING FLOOR PLAN
P5.00	PLUMBING RISER DIAGRAM
P6.01	PLUMBING DETAILS
P6.02	PLUMBING DETAILS

BUILDING CODE SUMMARY

A. INTERNATIONAL CODE COUNCIL ADOPTIONS*
1. BUILDING CODE — INTERNATIONAL BUILDING CODE 2015
2. STRUCTURAL CODE — INTERNATIONAL BUILDING CODE 2015
3. PLUMBING CODE — INTERNATIONAL PLUMBING CODE 2015
4. MECHANICAL CODE — INTERNATIONAL MECHANICAL CODE 2018
5. GAS CODE — INTERNATIONAL FUEL GAS CODE 2018
6. RESIDENTIAL CODE — INTERNATIONAL RESIDENTIAL CODE 2015
7. EXISTING BUILDINGS — INTERNATIONAL EXISTING BUILDINGS CODE 2015

* International Fire Code omitted in lieu of TPWD's implementation of National Fire Protection Association codes. International Energy Conservation Code 2015 omitted in lieu of Energy Standard for Buildings, ASHRAE/IESNA Standard 90.1 (2013).

B. NATIONAL FIRE PROTECTION ASSOCIATION
1. ELECTRICAL CODE — NATIONAL ELECTRIC CODE, NFPA-70 2020
2. FIRE CODE — NFPA - 1 2015
3. LIFE SAFETY CODE — NFPA - 101 2015

C. STATE ENERGY CONSERVATION OFFICE (SECO)/TEXAS COMPTROLLERS OFFICE
1. ENERGY CODES FOR STATE BUILDINGS - Energy Conservation Design Standards: Texas Administrative Code, Title 34, Part 1,Ch.19, Subchapter C
   a. COMPLIANCE WITH THE ENERGY CONSERVATION DESIGN STANDARD OF THE AMERICAN NATIONAL STANDARDS INSTITUTE (ANSI)/ASHRAE/ILLUMINATING ENGINEERING SOCIETY OF NORTH AMERICA (IESNA), ENERGY STANDARD FOR BUILDINGS, ANSI/ASHRAE/IESNA STANDARD 90.1 (2017)

   See SECO website for State Funded Buildings, New Construction and Major Renovation Requirements and SECO Compliance Certification Forms
2. WATER CONSERVATION STANDARDS FOR STATE BUILDINGS - Energy Conservation Design Standards: Texas Administrative Code, Title 34, Part 1, Ch.19, Subchapter C
   a. COMPLIANCE WITH THE WATER CONSERVATION DESIGN STANDARDS FOR STATE BUILDINGS AND INSTITUTIONS OF HIGHER EDUCATION FACILITIES, STATE ENERGY CONSERVATION OFFICE (SECO), 2016

   See SECO website for Texas Water Conservation Design Standards, Requirements and SECO Compliance Certification / Reporting Form

D. ACCESSIBILITY CODES
1. US DEPT. OF JUSTICE, 2010 ADA STANDARDS FOR ACCESSIBLE DESIGN
2. ARCHITECTURAL BARRIERS ACT ACCESSIBILITY GUIDELINES; OUTDOOR DEVELOPED AREAS, NOVEMBER 25, 2013
3. 2012 TEXAS ACCESSIBILITY STANDARDS, ELIMINATION OF ARCHITECTURAL BARRIERS, TEXAS GOVERNMENT CODE, CHAPTER 469

E. PLAYGROUND SAFETY CODE
1. ASTM F1487-17, STANDARD CONSUMER SAFETY PERFORMANCE SPECIFICATIONS FOR PLAYGROUND EQUIPMENT FOR PUBLIC USE
2. ASTM F2223-15, STANDARD GUIDE FOR ASTM STANDARDS ON PLAYGROUND SURFACING

SCOPE OF WORK

CONSTRUCTION OF A NEW 8,600 SQUARE FEET PRE-ENGINEERED METAL BUILDING INCLUDING ALL ASSOCIATED SITEWORK, SITE IMPROVEMENTS AND SITE UTILITIES.

CONSTRUCTION OF A NEW PARKING AREA, ACCESS GATES AND NEW ROAD CONNECTING TO AN EXISTING PARK ROAD.

TEXAS PARKS & WILDLIFE

TEXAS PARKS AND WILDLIFE

INFRASTRUCTURE DIVISION

4200 SMITH SCHOOL ROAD - AUSTIN, TEXAS 78744-3292

PDG ARCHITECTS
10000 RICHMOND SUITE 100
HOUSTON, TX 77042
713-629-6100

REGISTERED ARCHITECT — JOE W. MARTIN — 09601 — STATE OF TEXAS
04/23/2021

mweinzie 04/28/2021 1:50:28 PM

TEXAS PARKS & WILDLIFE — RELEASED FOR SOLICITATION — INFRASTRUCTURE DIVISION

PATH: X:\TPWD\18189_Mathis Fisheries Office\04 Design\A - Drawings (active set)\01 CURRENT\G0_Cover Page-UPDATED.dwg

PERCENTAGE: BID SET

ARCHITECTURALABBREVIATIONS:
(SEE ENGINEERING SHEETS FOR SYMBOLS APPLICABLE TO THAT WORK)

NUMBER OR SYMBOL
& AND
@ AT
C CENTERLINE
POUND OR NUMBER

A
ABV. ABOVE
ACOUS. ACOUSTICAL
A.C.T. ACOUSTICAL CLG. TILE
A.D. AREA DRAIN
ADJ. ADJUSTABLE
A.F.F. ABOVE FINISH FLOOR
AGGR. AGGREGATE
ALUM. ALUMINUM
APROX. APPROXIMATE
ARCH. ARCHITECT/ARCHITECTURAL
ASPH. ASPHALT

B
BD. BOARD
BIT. BITUMINOUS
BLDG. BUILDING
BLK. BLOCK
BLKG. BLOCKING
B.M. BENCH MARK
BM. BEAM
BOT. BOTTOM
B.U.R. BUILT-UP ROOFING

C
CAB. CABINET
C.B. CATCH BASIN
CEM. CEMENT
CER. CERAMIC
C.I. CAST IRON
C.G. CORNER GUARD
C.J. CONTROL JOINT
CLG. CEILING
CLO. CLOSET
CLR. CLEAR
C.M.U. CONCRETE MASONRY UNIT
C.O. CASED OPENING
CO. CLEANOUT
COL. COLUMN
CONC. CONCRETE
CONN. CONNECTION
CONST. CONSTRUCTION
CONT. CONTINUOUS
CORR. CORRIDOR
CPT. CARPET
CNTR. COUNTER
CTR. CENTER
CTSK. COUNTERSINK

D
DBL. DOUBLE
DEPT. DEPARTMENT
DET. DETAIL
D.F. DRINKING FOUNTAIN
DIA. DIAMETER
DIM. DIMENSION
DISP. DISPENSER
DN. DOWN
D.O. DOOR OPENING
DR. DOOR
D.S. DOWNSPOUT
DWG. DRAWING
DWR. DRAWER

E
E. EAST
EA. EACH
E.W. EACH WAY
E.D.F. ELECTRIC DRINKING FOUNTAIN
E.W.C. ELECTRIC WATER COOLER
ELEC. ELECTRICAL
EL. ELEVATION
EMERG. EMERGENCY
ENCL. ENCLOSURE
E.P. ELECTRICAL PANEL
EQ. EQUAL
EQUIP. EQUIPMENT
EXIST. EXISTING
EXP. EXPANSION
E.J. EXPANSION JOINT
EXT. EXTERIOR
E.I.F.S. EXT. INSUL. & FINISH SYSTEM

F
F.A. FIRE ALARM
F.B. FLAT BAR
F.D. FLOOR DRAIN
FDTN. FOUNDATION
F.E. FIRE EXTINGUISHER
F.E.C. FIRE EXTINGUISHER CABINET
F.H.C. FIRE HOSE CABINET
FIN. FINISH
F.L. FLOW LINE
FLR. FLOOR
FLASH. FLASHING
FLUOR. FLUORESCENT
F.O.C. FACE OF CONCRETE
F.O.F. FACE OF FINISH
F.O.G. FACE OF GLASS
F.O.M. FACE OF MASONRY
F.O.S. FACE OF STUDS
FPRF. FIREPROOF
F.R. FIRE RATED
F.R.T. FIRE RETARDANT TREATED
F.R.T.W. FIRE RETARDANT TREATED WOOD
F.S. FULL SIZE
FT. FOOT OR FEET
FTG. FOOTING
FURR. FURRING
FUT. FUTURE

G
GA. GAUGE
GALV. GALVANIZED
G.B. GRAB BAR
GL. GLAZING
GND. GROUND
GR. GRADE
G.S. GALVANIZED STEEL
GYP. GYPSUM

H
H.B. HOSE BIBB
H.C. HOLLOW CORE
HDCAP. HANDICAPPED
HWD. HARDWOOD
HDWR. HARDWARE
H.M. HOLLOW METAL
HORIZ. HORIZONTAL
HT. HEIGHT

I
I.D. INSIDE DIAMETER
IN. INCH
INSUL. INSULATION
INT. INTERIOR
I.B.C. INTERNATIONAL BLDG. CODE

J
JAN. JANITOR
JT. JOINT

L
L ANGLE
LAB. LABORATORY
LAM. LAMINATE
LAV. LAVATORY
LKR. LOCKER
LB. POUND
LBS. POUNDS
LT. LIGHT

M
MAX. MAXIMUM
M.C. MEDICINE CABINET
MECH. MECHANICAL
MEMB. MEMBRANE
MFR. MANUFACTURER
MH. MANHOLE
MIN. MINIMUM
MIR. MIRROR
MISC. MISCELLANEOUS
M.O. MASONRY OPENING
M.R. MOISTURE RESISTANT
MTD. MOUNTED
MTL. METAL
MULL. MULLION

N
N. NORTH
N.I.C. NOT IN CONTRACT
NO. NUMBER
NOM. NOMINAL
N.T.S. NOT TO SCALE

O
OA. OVERALL
O.C. ON CENTER
O.D. OUTSIDE DIAMETER
O.F.C.I. OWNER FURNISHED - CONTRACTOR INSTALLED
O.F.& I. OWNER FURNISHED AND INSTALLED
OFF. OFFICE
OPNG. OPENING
OPP. OPPOSITE

P
PNL. PANEL
P. LAM. PLASTIC LAMINATE
PL. PLATE
PLAS. PLASTIC
PLBG. PLUMBING
PLYWD. PLYWOOD
PR. PAIR
PRCST. PRECAST
PT. POINT
PTD. PAINTED
P.T.D. PAPER TOWEL DISPENSER
P.T.D./R. PAPER TOWEL DISPENSER/RECEPTACLE
PTN. PARTITION
P.T.R. PAPER TOWEL RECEPTACLE

Q
Q.T. QUARRY TILE
QTY. QUANTITY

R
R. RISER
RAD. RADIUS
R.D. ROOF DRAIN
REF. REFERENCE
REFR. REFRIGERATOR
REG. REGISTER
REINF. REINFORCE
RESIL. RESILIENT
RM. ROOM
R.O. ROUGH OPENING
REQ'D. REQUIRED

S
S. SOUTH
S.C. SOLID CORE
S.C.D. SEAT COVER DISPENSER
SCHED. SCHEDULE
S.D. SOAP DISH OR STORM DRAIN
SECT. SECTION
S.F. SQUARE FEET
SHWR. SHOWER
SHT. SHEET
SIM. SIMILAR
S.N.D. SANITARY NAPKIN DISPENSER
S.N.R. SANITARY NAPKIN RECEPTACLE
SPEC. SPECIFICATION
SPEC'D. SPECIFIED
SPECS. SPECIFICATIONS
SQ. SQUARE
S.S. SANITARY SEWER/ STAINLESS STEEL
STD. STANDARD
STL. STEEL
STOR. STORAGE
STR. STAIR
STRUC. STRUCTURAL
STM. SWR. STORM SEWER
SUSP. SUSPENDED
SWR. SEWER
SW. SWITCH
SYM. SYMETRICAL

T
T.P.D. TOILET PAPER DISPENSER
T&G TONGUE AND GROOVE
T.B. TOWEL BAR
TEL. TELEPHONE
TER. TERRAZZO
THK. THICK
T.O.C. TOP OF CURB
T.O.M. TOP OF MASONRY
T.O.P. TOP OF PAVEMENT
T.O.S. TOP OF STEEL
T.O.W. TOP OF WALL
T.P.D. TOILET PAPER DISPENSER
TRD. TREAD
TRTD. TREATED
TV. TELEVISION
TYP. TYPICAL

U
U.G. UNDERGROUND
U.N.O. UNLESS NOTED OTHERWISE
UNFIN. UNFINISHED
UTIL. UTILITY

V
VENT. VENTILATION
V.T.R. VENT THRU ROOF
VEST. VESTIBULE

W
W. WEST
W/ WITH
W.C. WATER CLOSET
W.H. WATER HEATER
WD. WOOD
WDW. WINDOW
W/O WITHOUT
WP. WATERPROOF
WSCT. WAINSCOT
WT. WEIGHT
W.W.F. WELDED WIRE FABRIC

CODE INFORMAITON

APPLICABLE CODES:
REFER TO COVER PAGE

OCCUPANCY CLASSIFICATIONS:
OFFICE AREA - B OCCUPANCY
STORAGE AREA - S1 OCCUPANCY

GENERAL BUILDING LIMITATIONS:
TYPE OF CONSTRUCTION: TYPE II-B
ALLOWABLE HEIGHT: 55 FEET
ALLOWABLE STORIES: 2
ALLOWABLE AREA: 9,500 SF
AREA INCREASES BASED ON FRONTAGE:
A=9,500 + (9,500 x 0.75) = 16,625 SF PER FLOOR
ACTUAL AREA: 8,512 SF

FIRE PROTECTION:
NON - SPRINKLERED

FIRE RATED EXTERIOR WALLS:
NONE - OPEN SPACE GREATER THAN 30 FEET ON ALL 4 SIDES OF THE BUILDING

OCCUPANT LOAD:
OCCUPANCY LOAD BASED ON IBC-2015 TABLE 1004.1.1:

B - OFFICE = AREA / 100 GROSS SQ.FT.
- INLAND FISHERIES OFFICE AREA = 1,585 SQ.FT.
- STATE PARK OFFICE AREA = 1,597 SQ.FT.
- *TOTAL AREA FOR OFFICE AREAS = 3,182 SQ.FT. / 100 SQ.FT. = 32 OCCUPANTS*

S1 - STORAGE / SHOP / PREP AREAS
- STOARAGE AREA - RM #13 = 4,055 SQ.FT
- PREP AREA - RM #27 = 763 SQ.FT.
- SHOP AREA - RM #28 = 512 SQ.FT.
- *TOTAL AREA FOR STROAGE/SHOP/PREP AREAS = 5,330 SQ.FT. / 300 SQ.FT. = 18 OCCUPANTS*

TOTAL NUMBER OF OCCUPANTS = 32+18 = 50 OCCUPANTS

PLUMBING FIXTURE REQUIRED PER IBC 2015 TABLE 2902.1 (BASED ON ASSEMBLY - B FOR OFFICES):

(1) WC PER (25) FOR THE FIRST (50) AND (1) PER 50 FOR THE REMAINDER EXCEEDING (50)

TOTAL NO. OF WC REQUIRED = 2 WC.
TOTAL NO. OF WC PROVIDED = 2 WC.

(1) LAVATORY PER (40) FOR THE FIRST 80 AND (1) PER 80 FOR THE REMAINDER EXCEEDING (80).

TOTAL NO. OF LAVAOTRIES REQUIRED = 2 LAV.
TOTAL NO. OF LAVATORIES PROVIDED = 2 LAV.

(1) SERVICE SINK REQUIRED.
(1) SERVICE SINK PROVIDED.

BASED ON SECTION 2902.3.2 "LOCATION OF TOILET FACILITIES IN OCCUPANCIES OTHER THAN MALLS":
- TOILETS LOCATED IN WITHIN THE SAME FACILITY SHALL NOT EXCEED A DISTANCE OF 500 FEET.
- RESTROOM BETWEEN THE TWO OFFICE SPACES IS LESS THAN 500 FEET, THEREFORE (1) RESTROOM IN EACH OF THE OFFICES SPACES IS SUFFICIENT TO MEET THE INTENT OF THE CODE.

DRINKING FOUNTAINS:
1/100 OCCUPANT = 1 REQUIRED (BASED ON B-OCCUPANCY GROUP)
BOTTLE FILLER IS ALLOWED REPLACE DRINKING FOUNTAIN (TO BE PROVIDED BY OWNER)

MINIMUM NUMBER OF EXITS REQUIRED:
PER OCCUPANT LOAD
B - OCCUPANCY = (1) EXIT PER 49 OCCUPANT
NO. OF EXITS REQUIRED PER PLANS = (2)
NO. OF EXITS PROVIDED PER PLANS = (5)

S - OCCUPANCY = (1) EXIT PER 29 OCCUPANT
NO. OF EXITS REQUIRED PER PLANS = (1)
NO. OF EXITS PROVIDED PER PLANS = (3)

EXIT ACCESS TRAVEL DISTANCE:
PER TABLE 1017.2 (FOR NON-SPRINKLERED BUILDING)
B - OCCUPANCY = 200 FEET
S1 - OCCUPANCY = 200 FEET

CORRIDOR FIRE RESISTANCE RATING:
UN-RATED PER TABLE 1020.1
B - OCCUPANT LOAD FOR EACH OF THE OFFICES IS LESS THAN 30
S - OCCUPANT LOAD OF STORAGE / PREP / SHOP AREA IS LESS THAN 30

TOTAL EXIT WIDTH:
CORRIDOR WIDTH AND CONSTRUCTION (TABLE 1003.2.3) OCCUPANCY B & S
CORRIDORS = .20"PER OCC.
50 OCCUPANTS x .20 = 10"
CORRIDOR WIDTH NOT LESS THAN 44" REQUIRED. 60" MINIMUM COORDIOR WIDTH PROVIDED

FIRE EXTINGUISHERS:
TOTAL OF (5) EXTINGUISHERS REQUIRED IN THE FOLLOWING AREAS:
(1) IN STORAGE AREA
(1) IN PREP AREA
(1) IN SHOP AREA
(1) IN INLAND FISHERIES OFFICE SPACE
(1) IN STATE PARK OFFICE SPACE

PANIC HARDWARE:
GROUP B - OCCUPANCY, EXIT DOORS SERVING ON OCCUPANT LOAD OF 100 OR MORE SHALL NOT BE PROVIDED WITH A LATCH OR LOCK UNLESS IT IS PANIC HARDWARE (SEC. 1003.3.1.9) REFER TO DOOR HARDWARE SCHEDULE.

TEXAS PARKS & WILDLIFE

REGISTERED ARCHITECT JOE W. MAHLER 09601 STATE OF TEXAS
04/23/2021

PDG ARCHITECTS
10000 RICHMOND
SUITE 100
HOUSTON, TX 77042
713-629-6100

MATHIS FISHERIES OFFICE
AT LAKE CORPUS CHRISTI, MATHIS, TEXAS
PROJECT NUMBER: 127144

DATE: 04-23-2021
DESIGNED BY:
DRAWN BY:
REVIEWED BY:
REVISED:
REVISED:

SHEET TITLE
CODE AND GENERAL INFORMATION

SHEET NUMBER
G001

PERCENTAGE: BID SET

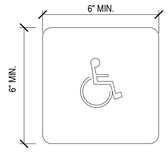

LOCATE AT:
- ALL FACILITIES AND ELEMENTS REQUIRED TO BE ACCESSIBLE PER TAS 216.
-AT ALL AREAS FOR EVACUATION ASSISTANCE
-AT ALL ACCESSIBLE TOILET AND BATHING FACILITIES
-AT ALL PUBLIC PHONES

INTERNATIONAL SYMBOL OF ACCESSIBILITY

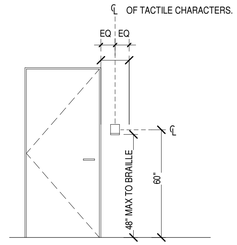

DOOR SIGNAGE HEIGHT AND LOCATION

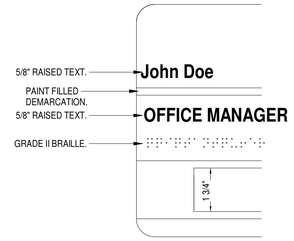

NOTES - ALL SIGN TYPES:

1. TACTILE CHARCTERS SHALL BE 48" MIN. A.F.F. AND 60" MAX A.F.F.
2. VISUAL CHARACTERS SHALL BE 40" MIN A.F.F. SEE TABLE 305.5.5 OF TAS FOR MORE INFORMATION ON VISUAL CHARACTERS.
3. ALL COPY TO BE HELVETICA MEDIUM.
5. ALL COPY TO BE RAISED 1/32" MIN. ABOVE THEIR BACKGROUND.
5. COPY STROKE WIDTH TO BE 1/4" WIDE MIN.
6. SIZE OF COPY MAY BE ADJUSTED; HOWEVER, LETTERS MAY NOT BE MORE THAN 5/8" HIGH. UNLESS OTHERWISE NOTED.
7. SEE SECTION 703 OF THE TAS FOR ADDITIONAL REQUIREMENTS ON SIGNAGE.

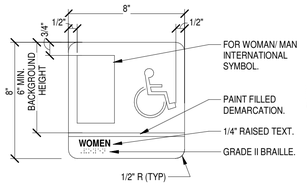

MEN'S AND WOMEN'S SIGNAGE

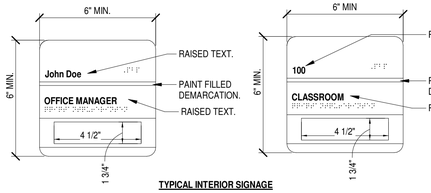

TYPICAL INTERIOR SIGNAGE

SIGNAGE REQUIREMENTS
NTS
11

NOTES: HOT WATER AND DRAIN PIPES UNDER LAVATORIES SHALL BE INSULATED OR OTHERWISE CONFIGURED TO PROTECT AGAINST CONTACT.

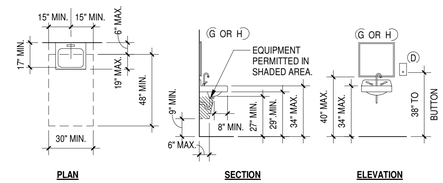

PLAN **SECTION** **ELEVATION**

SEE SECTION 606 OF THE TAS FOR ADDITIONAL REQUIREMENTS ON ACCESSIBLE LAVATORIES.

WALL MOUNTED LAVATORY REQUIREMENTS
1/4" = 1'-0"
10

NOTES:
1) SEE PLANS FOR NUMBER AND LAYOUT OF LAVATORIES.
2) SEE MILLWORK DETAILS FOR COUNTERTOP CONSTRUCTION.
3) 34" MAX HEIGHT TO FLOOD LEVEL/ RIM HEIGHT OF BOWL WHERE BOWL/LAV SITS IN COUNTER.
4) 34" MAX COUNTER WHERE UNDER MOUNT OR WALL HUNG IS INSTALLED.

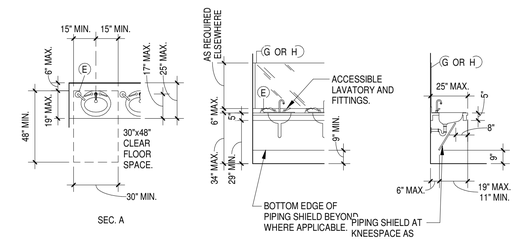

PLAN **ELEVATION** **SECTION A**

SEE SECTION 606 OF THE TAS FOR ADDITIONAL REQUIREMENTS ON ACCESSIBLE COUNTERTOP LAVATORIES.

COUNTER MTD. LAV. REQUIREMENTS
1/4" = 1'-0"
09

1) SEE PLANS FOR NUMBER AND LAYOUT OF STALLS.
2) WHERE 6 OR MORE STALLS ARE PROVIDED, IN ADDITION TO THE STANDARD ACCESSIBLE STALL, AT LEAST ONE AMBULATORY ACCESSIBLE TOILET COMPARTMENT SHALL BE PROVIDED. SEE TAS 604.8.
3) THE REAR GRAB BAR SHALL BE PERMITTED TO 24" (610 MM) LONG MINIMUM, CENTERED ON THE WATER CLOSET, WHERE WALL SPACE DOES NOT PERMIT A LENGTH OF 36" (915 MM) MINIMUM DUE TO THE LOCATION OF A RECESSED FIXTURE ADJACENT TO THE WATER CLOSET.

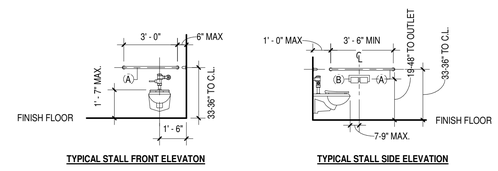

TYPICAL STALL FRONT ELEVATON **TYPICAL STALL SIDE ELEVATION**

SEE SECTION 608 OF THE TAS FOR ADDITIONAL REQUIREMENTS ON ACCESSIBLE STALLS.

ADULT ACCESSIBLE TOILET STALL ELEVATIONS
1/4" = 1'-0"
06

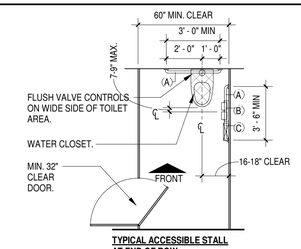

TYPICAL ACCESSIBLE STALL AT END OF ROW.

1) SEE PLANS FOR NUMBER AND LAYOUT OF STALLS.
2) WHERE 6 OR MORE STALLS ARE PROVIDED, IN ADDITION TO THE STANDARD ACCESSIBLE STALL, AT LEAST ONE AMBULATORY ACCESSIBLE TOILET COMPARTMENT SHALL BE PROVIDED. SEE TAS 604.8.
3) THE TOILET COMPARTMENT DOORS SHALL NOT SWING INTO THE MIN. COMPARTMENT AREA.

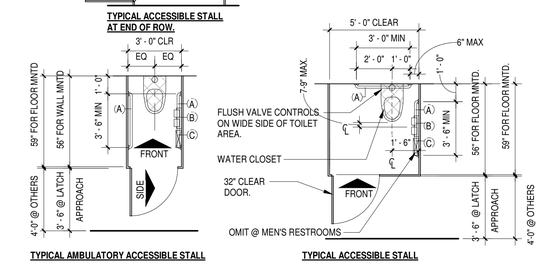

TYPICAL AMBULATORY ACCESSIBLE STALL **TYPICAL ACCESSIBLE STALL**

SEE SECTION 604.8 OF THE TAS FOR ADDITIONAL REQUIREMENTS ON ACCESSIBLE STALLS.

ACCESSIBLE TOILET STALLS
1/4" = 1'-0"
05

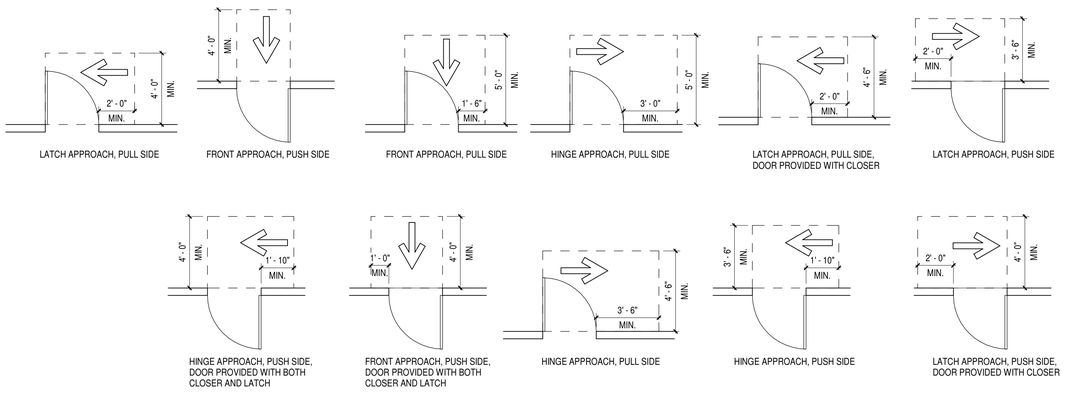

DOOR APPROACHES
1/4" = 1'-0"
03

NOTE: TO OUTLET.
NOTE: WHERE FORWARD REACH IS UNOBSTRUCTED.
NOTE: WHERE FORWARD REACH IS UNOBSTRUCTED.
NOTE: LOCATE DISPENSER SO END OF SPOUT IS OVER SINK.

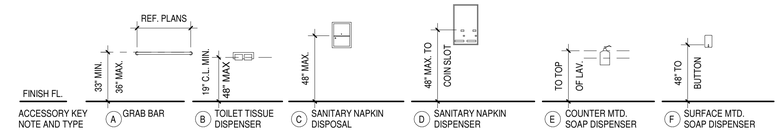

NOTE: FLOORS WITHIN ACCESSIBLE RESTROOMS MUST NOT EXCEED 2% (1:48) SLOPE IN ANY DIRECTION

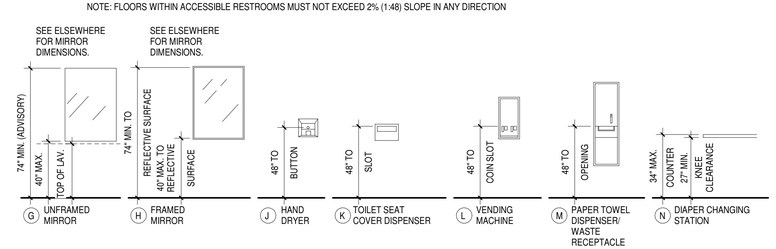

FIXTURE HEIGHT REQUIREMENTS
1/4" = 1'-0"
01

TEXAS PARKS & WILDLIFE

REGISTERED ARCHITECT JOE W. MAHLER 09601 STATE OF TEXAS
04/23/2021

PDG ARCHITECTS
10000 RICHMOND
SUITE 100
HOUSTON, TX 77042
713-629-6100

MATHIS FISHERIES OFFICE
AT LAKE CORPUS CHRISTI, MATHIS, TEXAS
PROJECT NUMBER: 127144

DATE: 04-23-2021
DESIGNED BY:
DRAWN BY:
REVIEWED BY:
REVISED:
REVISED:

SHEET TITLE
TAS INFORMATION

SHEET NUMBER
G002

PERCENTAGE: BID SET

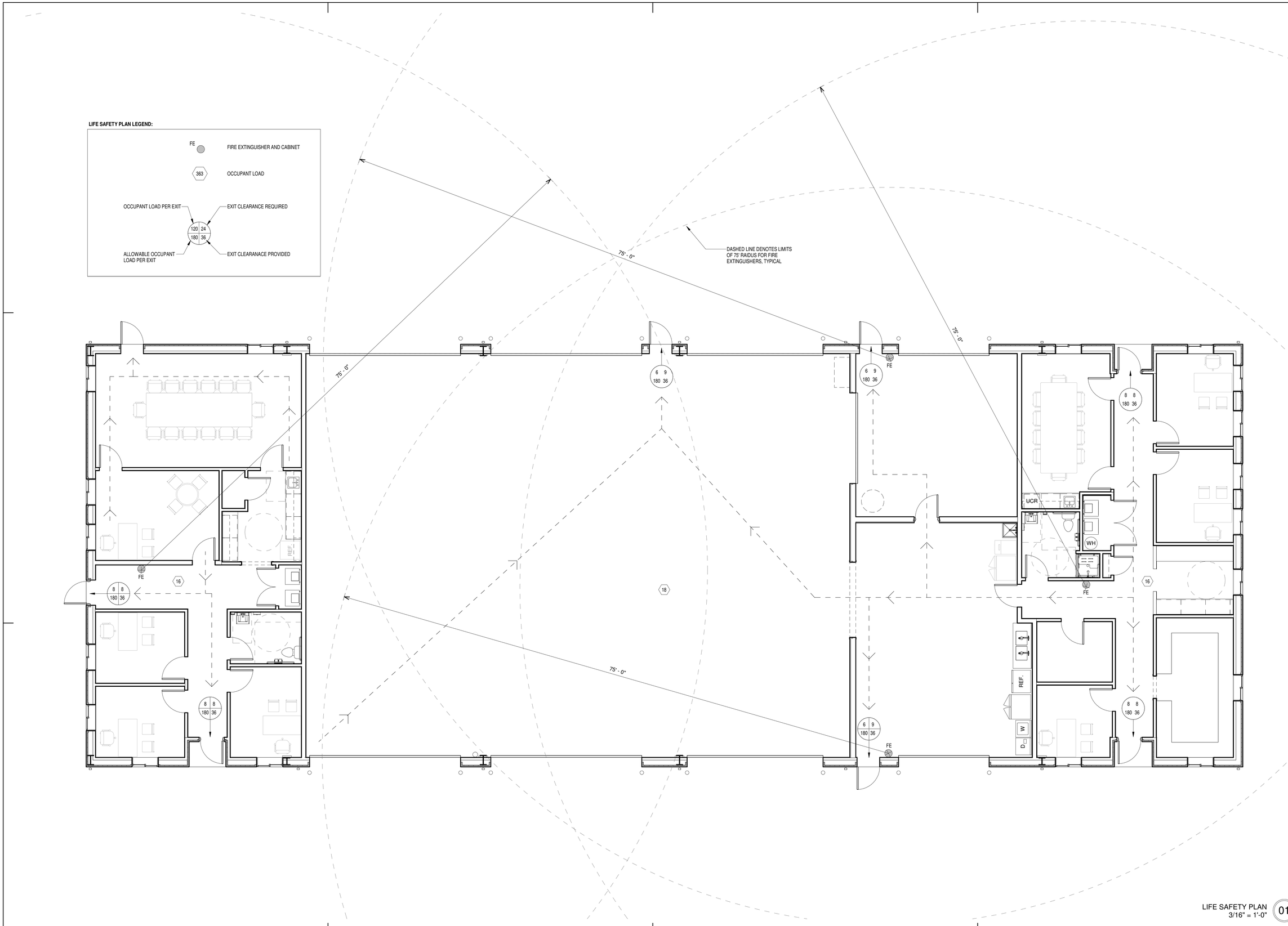

LIFE SAFETY PLAN
3/16" = 1'-0"
01

TEXAS PARKS & WILDLIFE

REGISTERED ARCHITECT
JOE W. MAHLER
09601
STATE OF TEXAS
04/23/2021

PDG ARCHITECTS

10000 RICHMOND
SUITE 100
HOUSTON, TX 77042
713-629-6100

MATHIS FISHERIES OFFICE

AT LAKE CORPUS CHRISTI, MATHIS, TEXAS

PROJECT NUMBER: 127144

DATE: 04-23-2021
DESIGNED BY:
DRAWN BY:
REVIEWED BY:
REVISED:
REVISED:

SHEET TITLE

LIFE SAFETY PLAN

SHEET NUMBER

G003

PERCENTAGE: BID SET

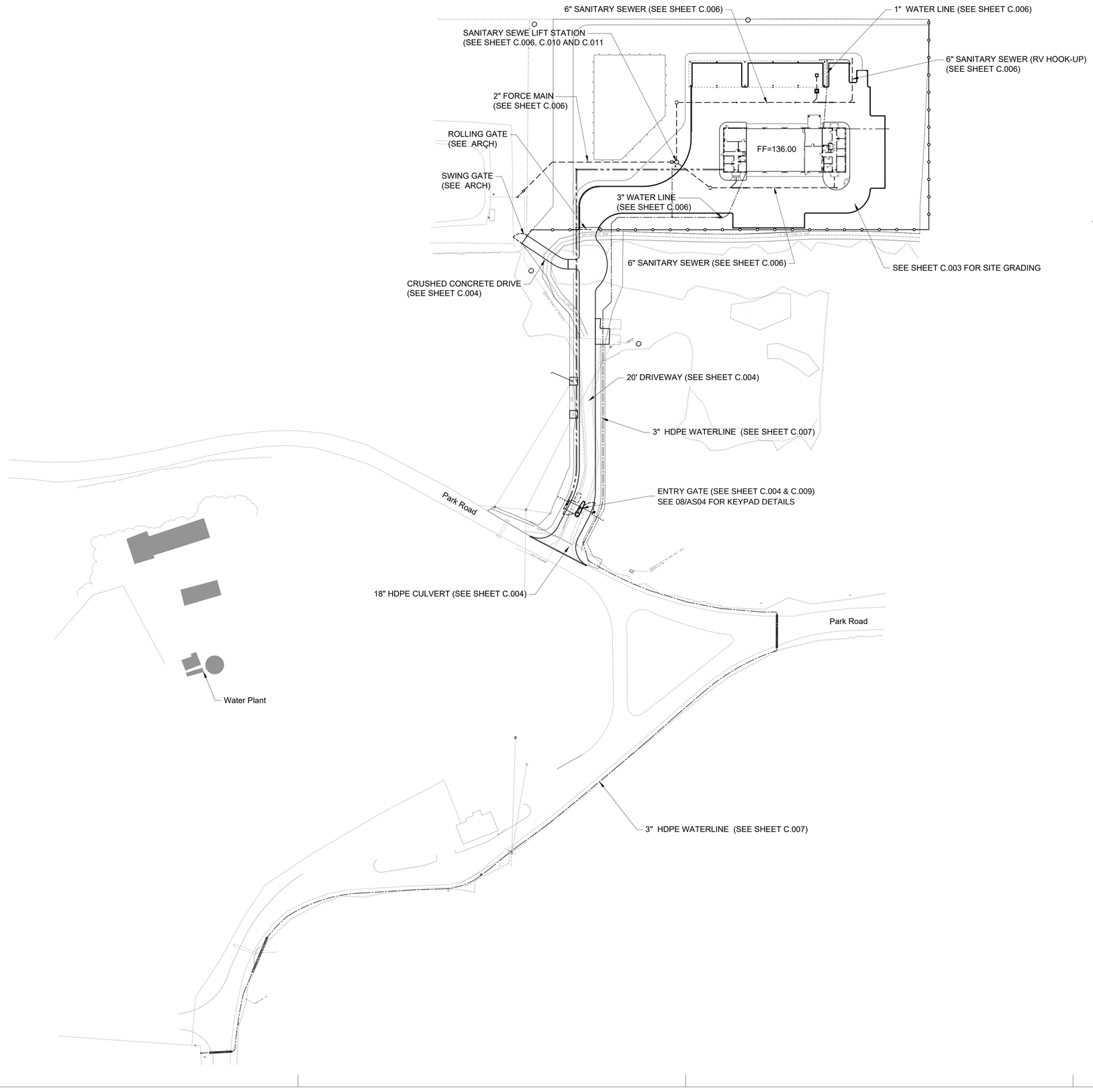

N

0 60 120

SCALE: 1"=60'

TEXAS PARKS & WILDLIFE

STATE OF TEXAS
ROBERT A. HILL
93655
LICENSED
PROFESSIONAL ENGINEER
4/23/2021

OMEGA ENGINEERS, INC.
16340 PARK TEN PLACE, Ste. #325
HOUSTON TEXAS, 77084
OMEGAENGINEERS.COM
TX PE Firm Reg. No. F-2147
P:281 647 9182 F:281 647 9184

MATHIS FISHERIES OFFICE
AT LAKE CORPUS CHRISTI, MATHIS, TEXAS
PROJECT NUMBER: 127144

DATE: 4/23/21
DESIGNED BY: RAH
DRAWN BY: RAH
REVIEWED BY:
REVISED:
REVISED:

SHEET TITLE
CIVIL LAYOUT

SHEET NUMBER
C.001

PERCENTAGE: BID ISSUE

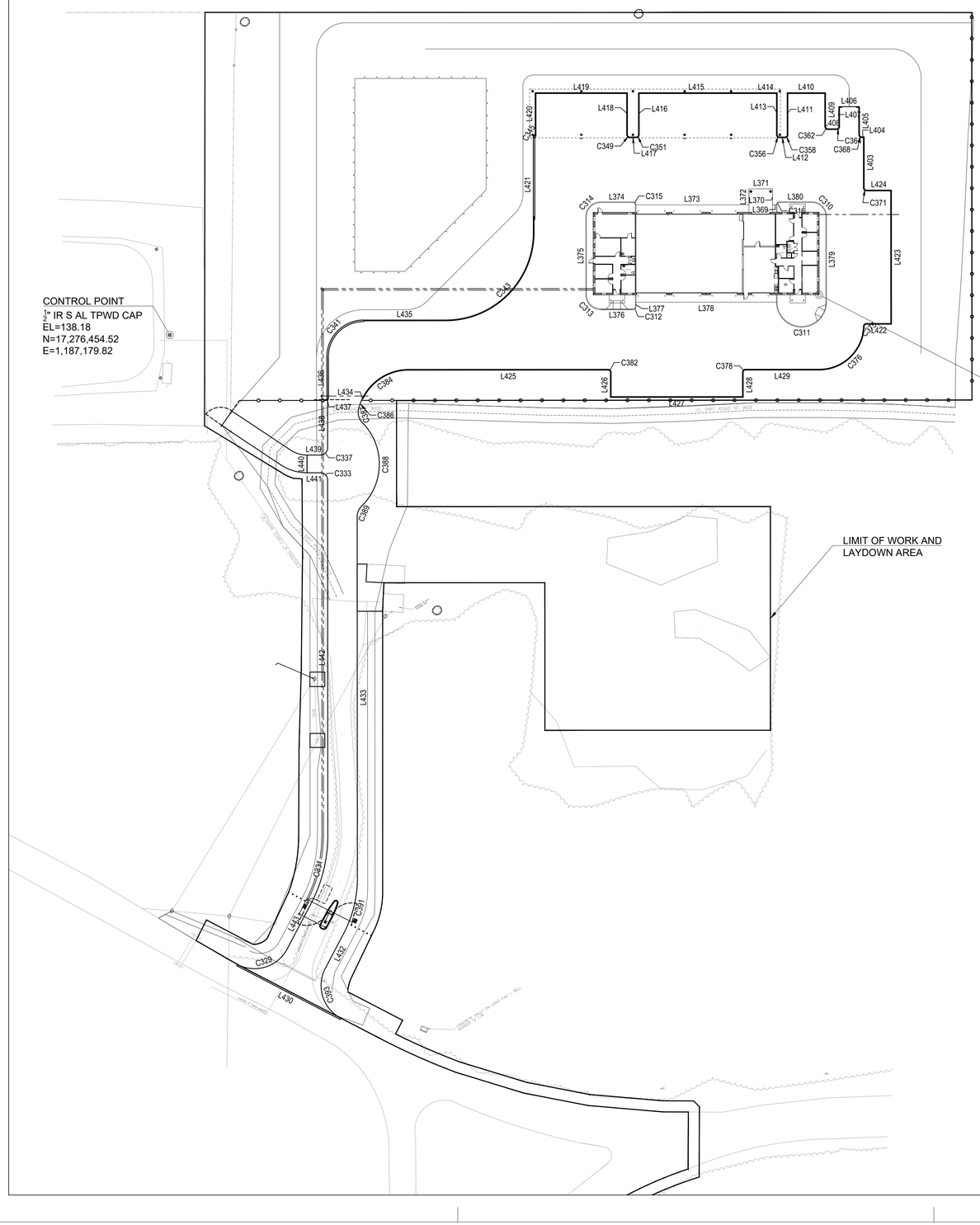

CURVE AND LINE DATA IS AT BACK OF CURB
OR EDGE OF DRIVEWAY PAVEMENT

0 60 120
SCALE: 1"=40'

Parcel Line Table		
Line #	Length	Direction
L403	34.62	S31° 46' 28.97"W
L404	1.67	S58° 15' 19.05"E
L405	18.95	S31° 44' 40.95"W
L406	14.00	S58° 13' 34.02"E
L407	13.50	N31° 44' 40.95"E
L408	6.00	S58° 13' 31.03"E
L409	22.94	S31° 44' 53.77"W
L410	26.00	S58° 13' 31.03"E
L411	28.50	N31° 44' 53.80"E
L412	3.75	S58° 13' 31.03"E
L413	28.50	S31° 46' 28.97"W
L414	15.50	S58° 13' 31.03"E
L415	78.49	S58° 13' 31.03"E
L416	28.50	N31° 46' 28.97"E
L417	4.50	S58° 13' 31.03"E
L418	28.50	S31° 46' 28.97"W
L419	62.50	S58° 13' 31.03"E
L420	28.32	N31° 46' 28.97"E
L421	64.00	N31° 45' 40.82"E
L422	17.02	N58° 15' 19.05"W
L423	90.87	S31° 44' 40.95"W
L424	16.99	S58° 13' 31.03"E
L425	135.15	N58° 15' 19.05"W
L426	17.00	N31° 44' 40.95"E
L427	90.00	N58° 15' 19.05"W
L428	17.00	S31° 44' 40.95"W
L429	50.00	N58° 15' 19.05"W
L430	79.00	N30° 45' 40.47"W
L431	1.00	S59° 29' 59.85"W
L432	26.91	S31° 44' 40.95"W
L433	245.05	S31° 44' 40.95"W
L434	0.55	N58° 15' 19.05"W
L435	55.48	S58° 15' 19.05"E
L436	28.44	N31° 44' 40.95"E
L437	0.50	N58° 15' 19.05"W
L438	33.04	N31° 44' 40.95"E
L439	8.95	S58° 15' 19.05"E
L440	12.00	N31° 44' 40.95"E
L441	8.95	N58° 15' 19.05"W
L442	240.61	N31° 44' 40.95"E
L443	34.49	N59° 29' 59.85"E

Line Table		
Line #	Length (ft)	Direction
L369	3.08	S58° 15' 19.08"E
L370	10.77	S31° 44' 40.95"W
L371	16.00	S58° 15' 19.05"E
L372	10.77	N31° 44' 40.95"E
L373	77.00	S58° 15' 19.05"E
L374	22.08	S58° 15' 19.05"E
L375	53.00	N31° 44' 40.95"E
L376	22.08	N58° 15' 19.05"W
L377	3.00	S31° 44' 40.95"W
L378	96.08	N58° 15' 19.05"W
L379	58.00	S31° 44' 40.95"W
L380	22.00	S58° 13' 31.03"E

Curve Table					
Curve #	Length (ft)	Radius (ft)	Delta	Chord Direction	Chord Length (ft)
C316	2.37	1.50	90.47	N76° 32' 26"E	2.13
C315	2.36	1.50	90.00	S13° 15' 19"E	2.12
C314	14.92	9.50	90.00	N76° 44' 41"E	13.44
C313	14.92	9.50	90.00	N13° 15' 19"W	13.44
C312	2.36	1.50	90.00	S76° 44' 41"W	2.12
C311	51.84	16.50	180.00	N58° 15' 19"W	33.00
C310	14.92	9.50	90.00	S13° 15' 22"E	13.44

Curve Table					
Curve #	Length	Radius	Delta	Chord Direction	Chord Length
C393	39.38	25.00	90.26	S14° 22' 10"W	35.44
C391	38.75	80.00	27.76	S45° 37' 20"W	38.38
C389	7.95	10.00	45.57	S54° 31' 52"W	7.75
C388	62.82	40.00	89.98	S32° 19' 32"W	56.56
C387	10.15	10.00	58.16	S16° 24' 53"W	9.72
C386	7.16	35.00	11.73	S51° 21' 33"W	7.15
C384	38.61	34.50	64.13	S89° 40' 54"W	36.63
C345	2.64	2.49	60.85	N62° 02' 59"E	2.52
C343	93.46	59.50	90.00	N76° 44' 41"E	84.15
C341	39.27	25.00	90.00	N76° 44' 41"E	35.36
C337	7.85	5.00	90.00	N76° 44' 41"E	7.07
C333	7.85	5.00	90.00	N13° 15' 19"W	7.07
C331	48.44	100.00	27.76	N45° 37' 20"E	47.97
C329	39.16	25.00	89.74	S75° 37' 50"E	35.27
C368	2.36	1.50	90.00	S13° 15' 19"E	2.12
C364	2.36	1.50	90.03	N76° 45' 35"E	2.12
C362	2.36	1.50	89.97	S13° 14' 25"E	2.12
C358	2.36	1.50	90.03	N76° 45' 41"E	2.12
C356	2.36	1.50	90.00	S13° 13' 31"E	2.12
C351	2.36	1.50	90.00	N76° 46' 29"E	2.12

Curve Table					
Curve #	Length	Radius	Delta	Chord Direction	Chord Length
C349	2.36	1.50	90.00	S13° 13' 31"E	2.12
C376	46.96	30.50	88.21	S77° 38' 24"W	42.45
C375	2.31	1.50	88.21	S77° 38' 24"W	2.09
C371	2.36	1.50	90.00	S13° 13' 31"E	2.12
C382	2.36	1.50	90.00	N13° 15' 33"W	2.12
C378	2.36	1.50	90.00	S76° 44' 41"W	2.12

TEXAS PARKS & WILDLIFE

STATE OF TEXAS
ROBERT A. HILL
93655
LICENSED
PROFESSIONAL ENGINEER
4/23/2021

OMEGA ENGINEERS, INC.
16360 PARK TEN PLACE, Ste. #325
HOUSTON TEXAS, 77084
OMEGAENGINEERS.COM
TX PE Firm Reg. No. F-2147
P:281 647 9182 F:281 647 9184

MATHIS FISHERIES OFFICE
AT LAKE CORPUS CHRISTI, MATHIS, TEXAS
PROJECT NUMBER: 127144

DATE: 4/23/21
DESIGNED BY: RAH
DRAWN BY: RAH
REVIEWED BY:
REVISED:
REVISED:

SHEET TITLE
SITE CONTROL

SHEET NUMBER
C.002

PERCENTAGE: BID ISSUE

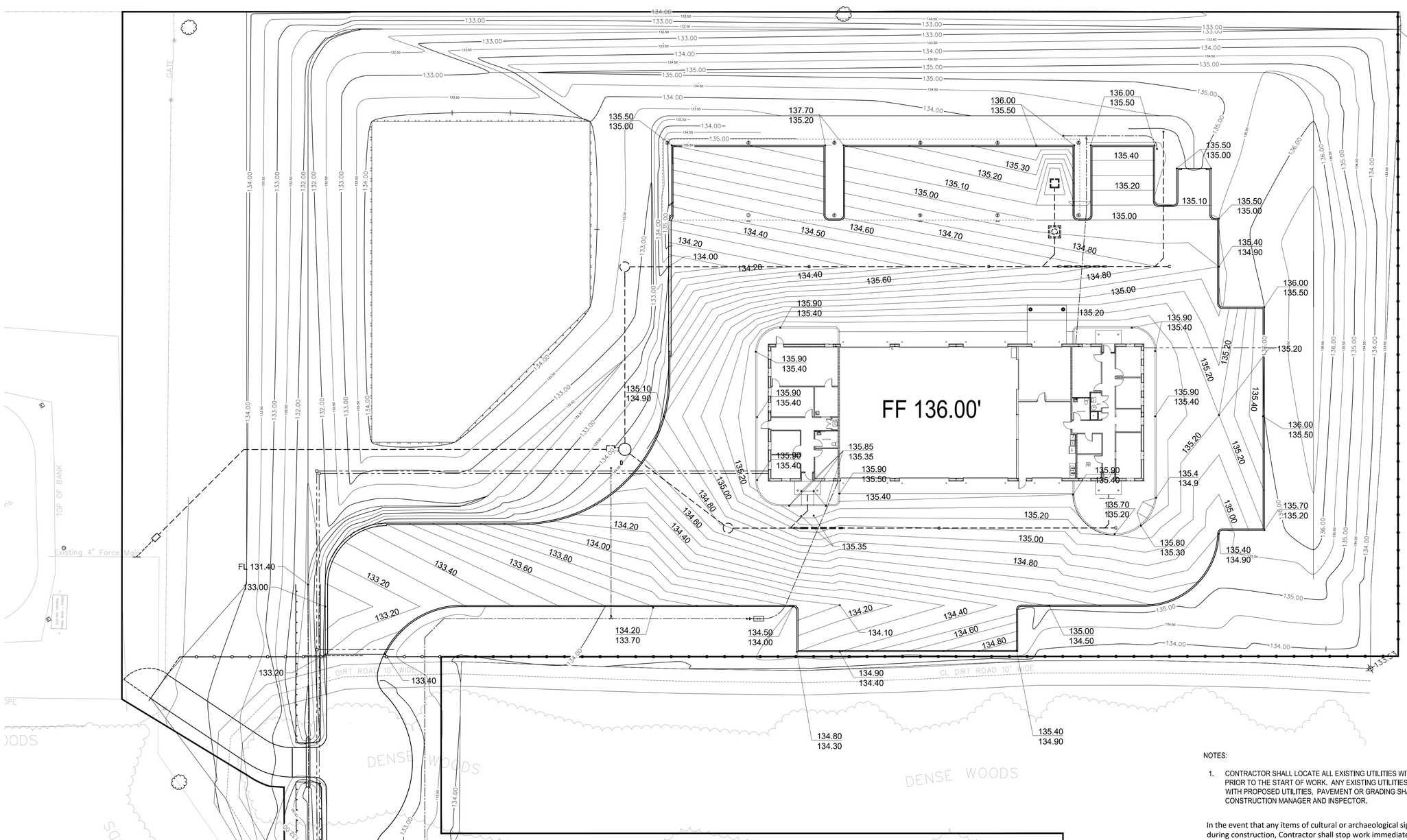

0 20 40
SCALE: 1"=20'

NOTES:

1. CONTRACTOR SHALL LOCATE ALL EXISTING UTILITIES WITHIN THE PROJECT LIMITS PRIOR TO THE START OF WORK. ANY EXISTING UTILITIES FOUND TO BE IN CONFLICT WITH PROPOSED UTILITIES, PAVEMENT OR GRADING SHALL BE REPORTED TO TPWD CONSTRUCTION MANAGER AND INSPECTOR.

In the event that any items of cultural or archaeological significance are encountered during construction, Contractor shall stop work immediately and contact David Kroskie, Region 2 Cultural Resources Coordinator: david.kroskie@tpwd.texas.gov / 512-924-8953.

TEXAS PARKS & WILDLIFE

STATE OF TEXAS
ROBERT A. HILL
93655
LICENSED
PROFESSIONAL ENGINEER
4/23/2021

OMEGA ENGINEERS, INC.
16340 PARK TEN PLACE, Ste. #325
HOUSTON TEXAS, 77084
OMEGAENGINEERS.COM
TX PE Firm Reg. No. F-2147
P:281 647 9182 F:281 647 9184

MATHIS FISHERIES OFFICE
AT LAKE CORPUS CHRISTI, MATHIS, TEXAS
PROJECT NUMBER: 127144

DATE: 4/23/21
DESIGNED BY: RAH
DRAWN BY: RAH
REVIEWED BY:
REVISED:
REVISED:

SHEET TITLE
SITE GRADING

SHEET NUMBER
C.003

PERCENTAGE: BID ISSUE

TEXAS 811

CONTRACTOR MUST CONTACT 811, TO HAVE UTILITIES LOCATED, TWO BUSINESS DAYS BEFORE DIGGING.

DRIVEWAY PAVEMENT SECTION AND EDGE DETAIL

N.T.S.

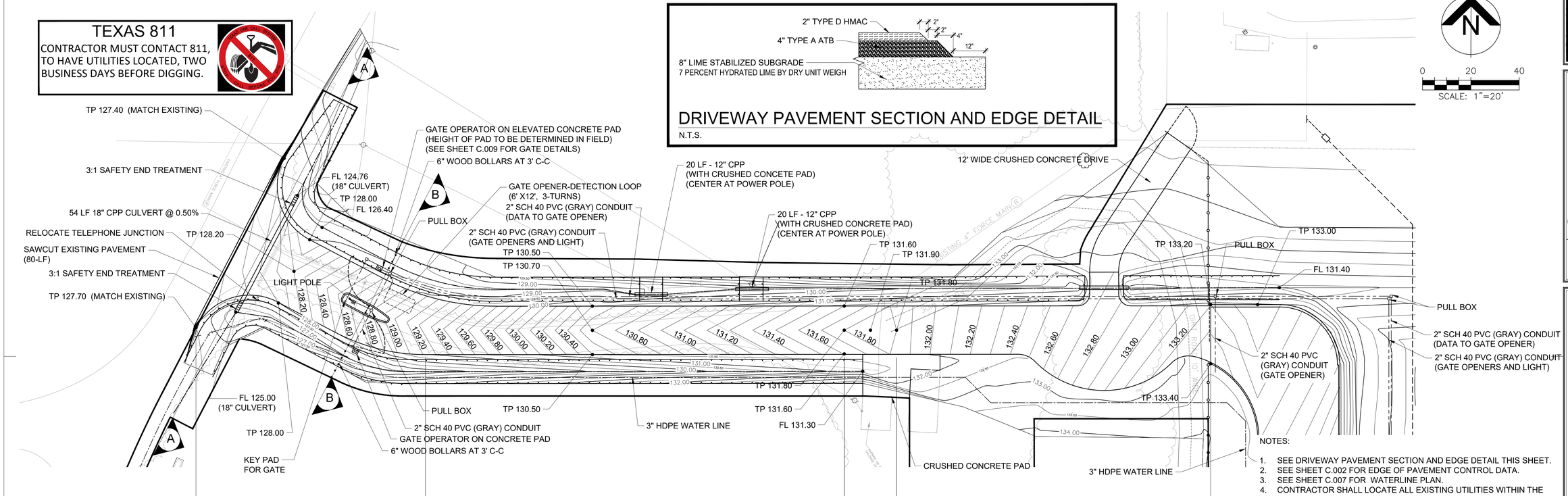

In the event that any items of cultural or archaeological significance are encountered during construction, Contractor shall stop work immediately and contact David Kroskie, Region 2 Cultural Resources Coordinator: david.kroskie@tpwd.texas.gov / 512-924-8953.

NOTES:

1. SEE DRIVEWAY PAVEMENT SECTION AND EDGE DETAIL THIS SHEET.
2. SEE SHEET C.002 FOR EDGE OF PAVEMENT CONTROL DATA.
3. SEE SHEET C.007 FOR WATERLINE PLAN.
4. CONTRACTOR SHALL LOCATE ALL EXISTING UTILITIES WITHIN THE PROJECT LIMITS PRIOR TO THE START OF WORK. ANY EXISTING UTILITIES FOUND TO BE IN CONFLICT WITH THE PROPOSED UTILITIES, PAVEMENT, OR GRADING SHALL BE REPORTED TO TPWD CONSTRUCTION MANAGER AND INSPECTOR. CONTRACTOR ASSUMES ALL LIABILITY FOR ANY REWORK REQUIRED RESULTING FROM FAILURE TO LOCATE EXISTING UTILITIES.

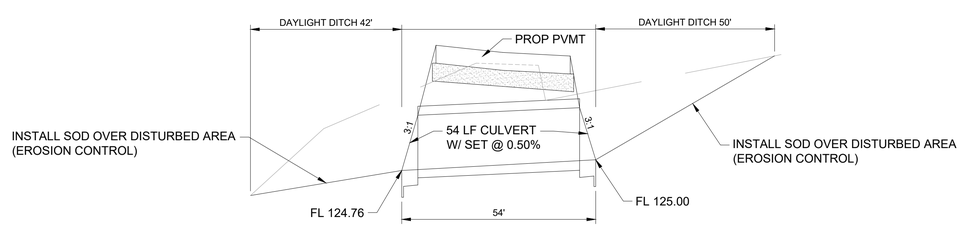

A-A

1"=20' H
1"=2' V

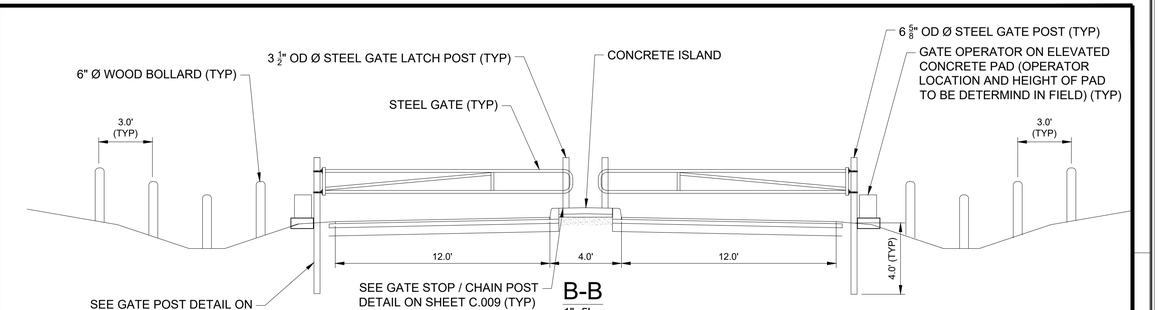

B-B

1"=5'

SEE GATE DETAILS ON SHEET C.009

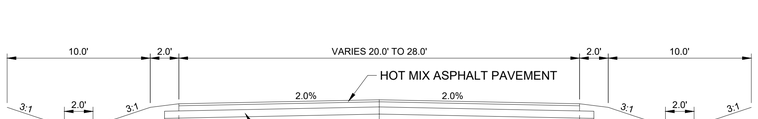

C-C

1"=5'

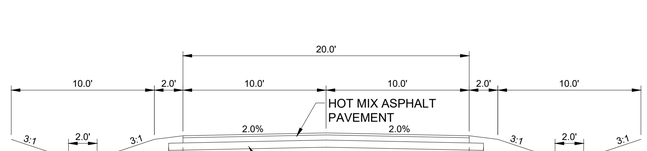

D-D

1"=5'

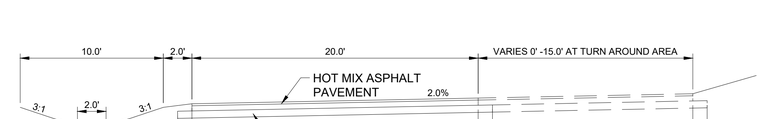

E-E

1"=5'

TEXAS PARKS & WILDLIFE

STATE OF TEXAS
ROBERT A. HILL
93655
LICENSED
PROFESSIONAL ENGINEER
4/23/2021

OMEGA ENGINEERS, INC.
16340 PARK TEN PLACE, Ste. #325
HOUSTON TEXAS, 77084
OMEGAENGINEERS.COM
TX PE Firm Reg. No. F-2147
P:281 647 9182 F:281 647 9184

MATHIS FISHERIES OFFICE

AT LAKE CORPUS CHRISTI, MATHIS, TEXAS

PROJECT NUMBER: 127144

DATE: 4/23/21
DESIGNED BY: RAH
DRAWN BY: RAH
REVIEWED BY:
REVISED:
REVISED:

SHEET TITLE

DRIVEWAY PLAN

SHEET NUMBER

C.004

PERCENTAGE: BID ISSUE

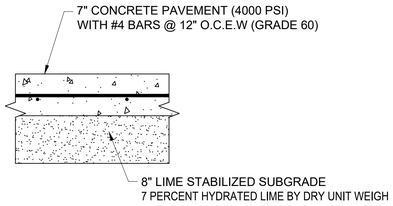

TYPICAL CONCRETE PAVEMENT SECTION

N.T.S.

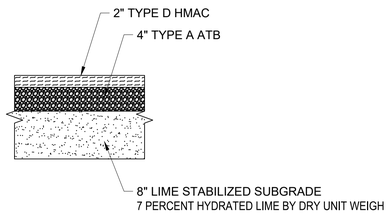

TYPICAL ASPHALT PAVEMENT SECTION

N.T.S.

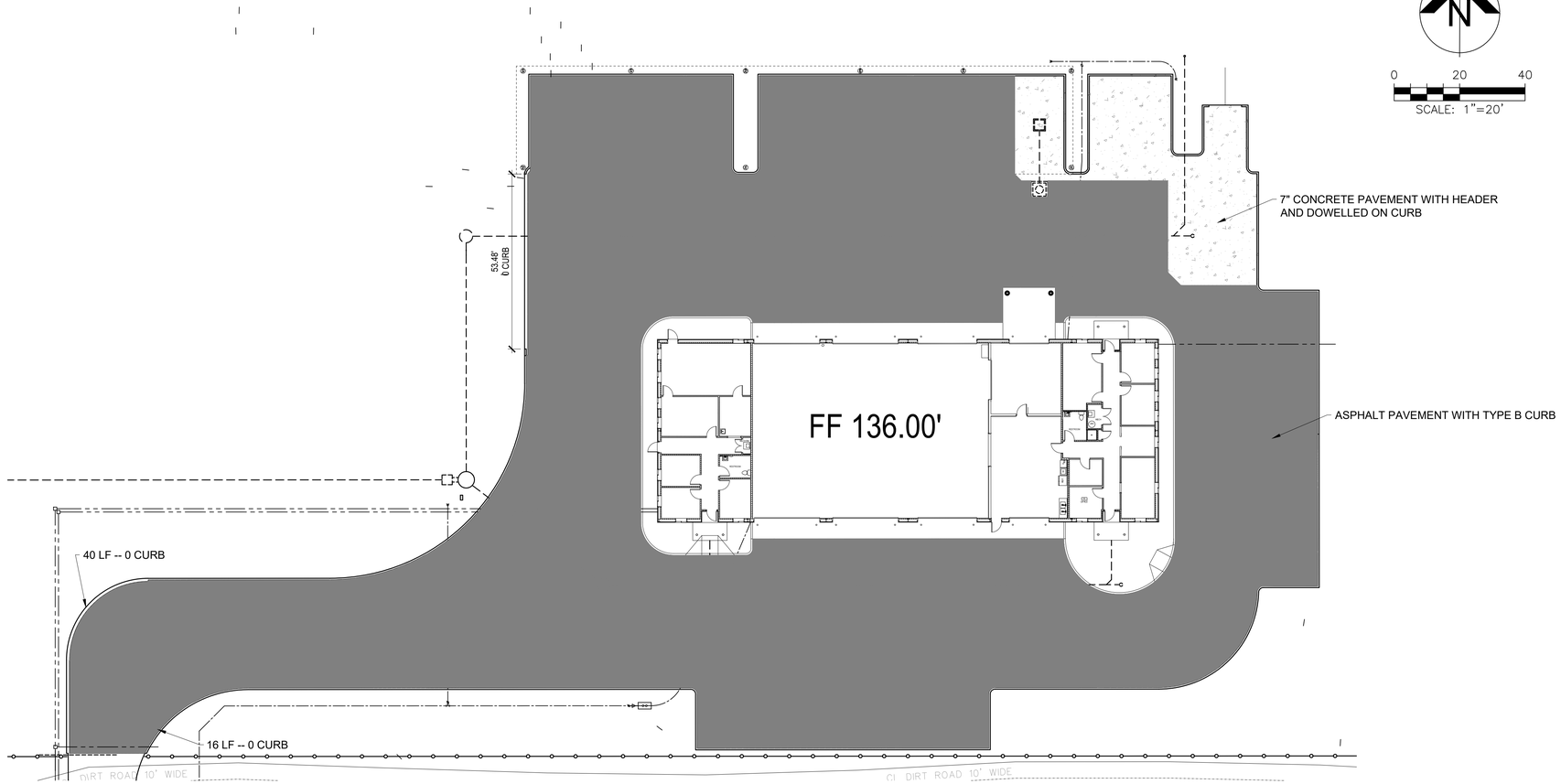

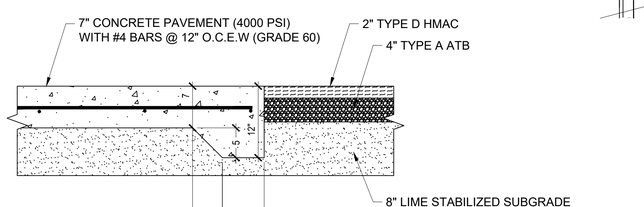

PAVEMENT HEADER

N.T.S.

In the event that any items of cultural or archaeological significance are encountered during construction, Contractor shall stop work immediately and contact David Kroskie, Region 2 Cultural Resources Coordinator: david.kroskie@tpwd.texas.gov / 512-924-8953.

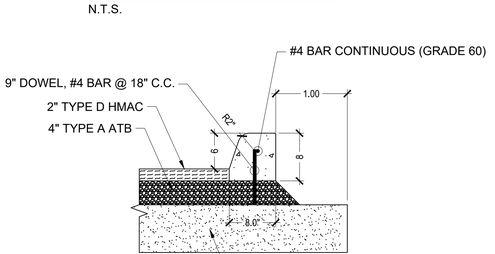

TYPE B CURB

N.T.S.

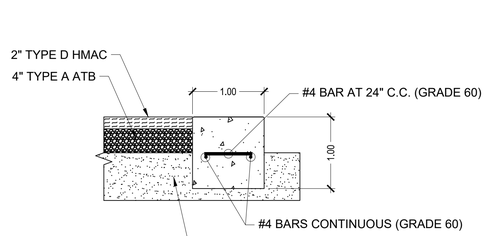

CONCRETE EDGE AT 0 CURB

N.T.S.

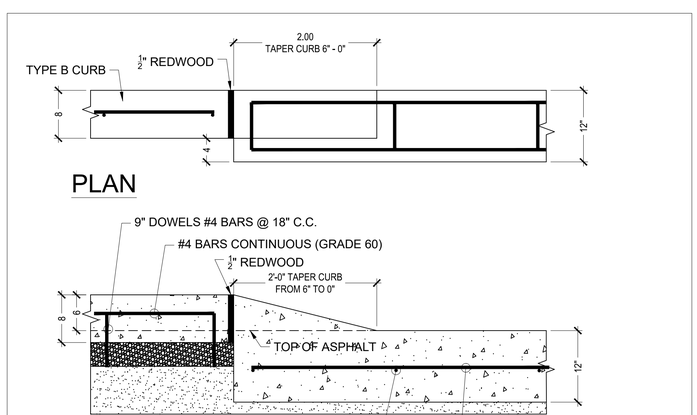

PLAN

SECTION

TRANSITION FROM TYPE B CURB TO 0 CURB

N.T.S.

TEXAS PARKS & WILDLIFE

STATE OF TEXAS
ROBERT A. HILL
93655
LICENSED
PROFESSIONAL ENGINEER
4/23/2021

OMEGA ENGINEERS, INC.
16360 PARK TEN PLACE, Ste. #325
HOUSTON TEXAS, 77084
OMEGAENGINEERS.COM
TX PE Firm Reg. No. F-2147
P:281 647 9182 F:281 647 9184

MATHIS FISHERIES OFFICE

AT LAKE CORPUS CHRISTI, MATHIS, TEXAS

PROJECT NUMBER: 127144

DATE: 4/23/21
DESIGNED BY: RAH
DRAWN BY: RAH
REVIEWED BY:
REVISED:
REVISED:

SHEET TITLE

SITE PAVEMENT PLAN AND DETAILS

SHEET NUMBER

C.005

PERCENTAGE: BID ISSUE

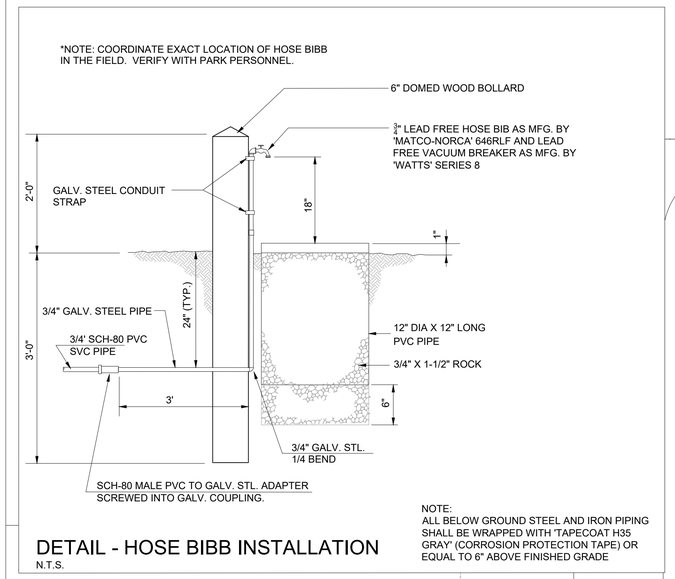

DETAIL - HOSE BIBB INSTALLATION

N.T.S.

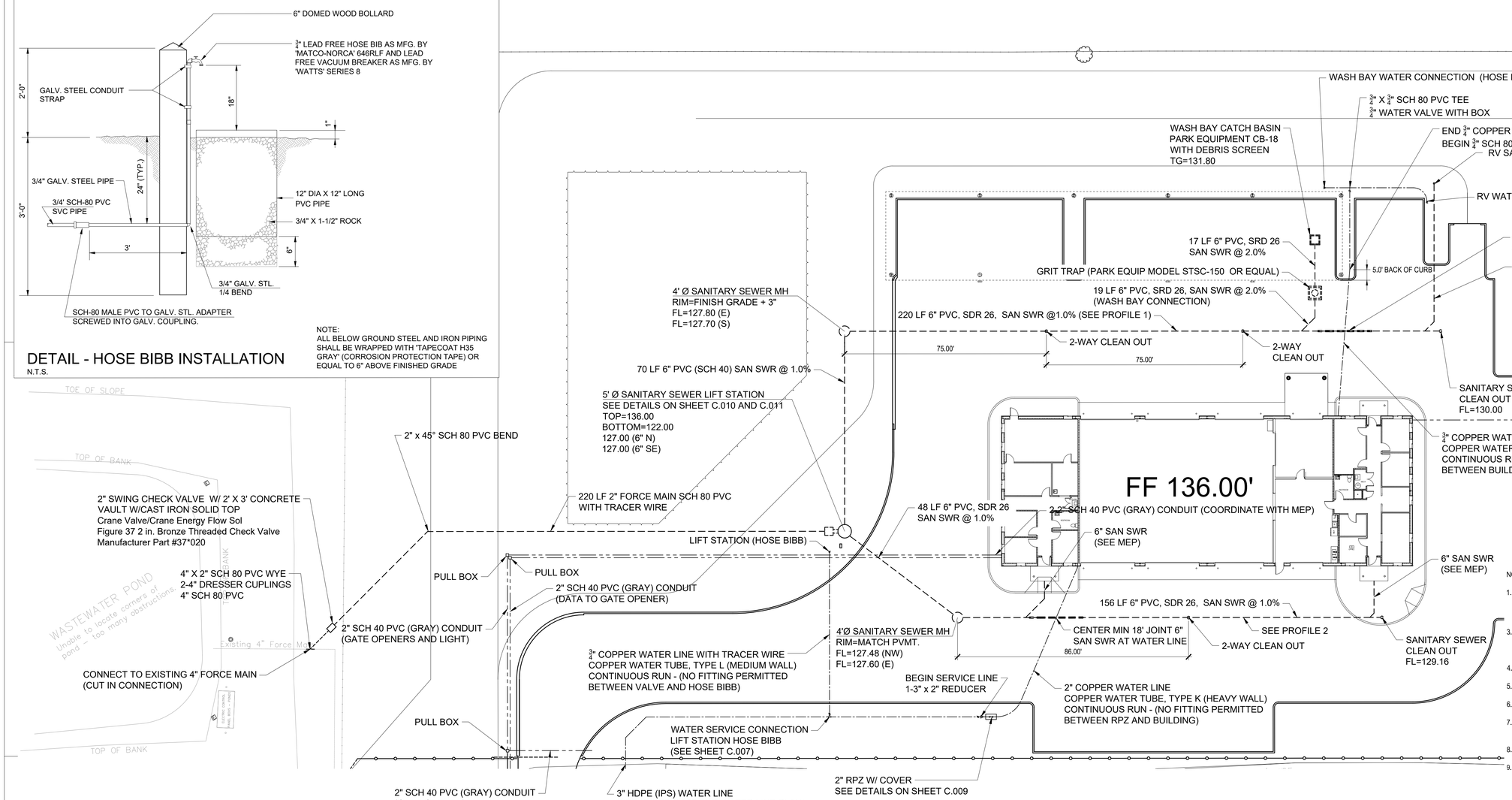

NOTES:

1. SEE SHEETS C.008 - C.011 FOR DETAILS.
BASE FOR MANHOLES AND LIFT STATION WET WELL SHALL BE A 12" PAD OF 1 1/2 SACK/ TON CEMENT STABILIZED SAND. BASE PAD SHALL EXTEND 1' BEYOND PRECAST BASE.
3. BEDDING AND BACKFILL FOR MANHOLES SHALL BE 1 1/2 SACK/ TON CEMENT STABILIZED SAND. FOR MANHOLES IN PAVED AREAS THE STABILIZED SAND BACK FILL SHALL EXTEND TO THE BOTTOM OF ASPHALT TREATED BASE.
4. FOR THE LIFT STATION WET WELL THE STABILIZED SAND BACKFILL SHALL EXTEND TO 2-FEET BELOW FINISHED GRADE.
5. FLOW ABLE FILL MAY BE USED IN LIEU OF CEMENT STABILIZED SAND FOR BACKFILL.
6. ALL CAST IRON FRAMES, RINGS, COVERS AND GRATES SHALL BE RATED FOR H20 LOADING.
7. ALL CONDUIT SPECIFIED IN PLANS SHALL BE INSTALLED AT A MINIMUM DEPTH OF 30 INCHES AND SHALL ENTER PULL BOXES FROM THE BOTTOM.
8. TRACER WIRE SHALL BE INSTALLED ON ALL WATER, WASTEWATER LINES AND FORCE MAINS.
9. CONTRACTOR SHALL LOCATE ALL EXISTING UTILITIES WITHIN THE PROJECT LIMITS PRIOR TO THE START OF WORK. ANY EXISTING UTILITIES FOUND TO BE IN CONFLICT WITH THE PROPOSED UTILITIES, PAVEMENT, OR GRADING SHALL BE REPORTED TO TPWD CONSTRUCTION MANAGER AND INSPECTOR. CONTRACTOR ASSUMES ALL LIABILITY FOR ANY REWORK REQUIRED RESULTING FROM FAILURE TO LOCATE EXISTING UTILITIES.

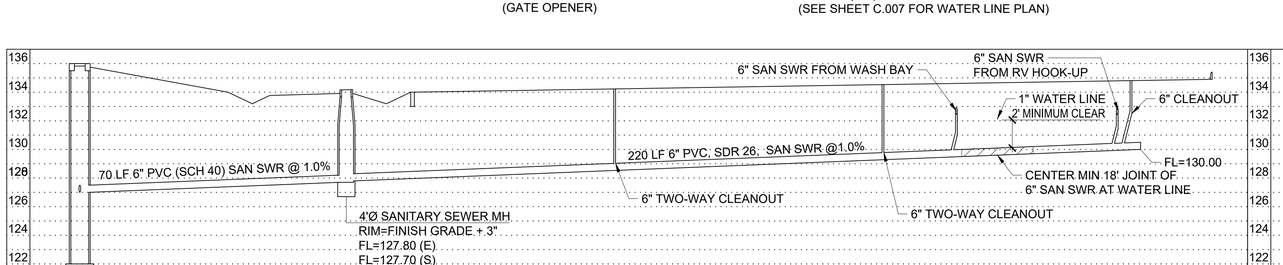

PROFILE 1

SCALE: 1"=20' H
1"=2' V

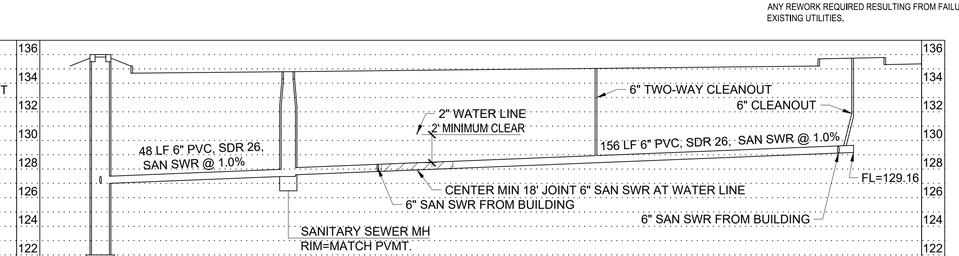

PROFILE 2

SCALE: 1"=20' H
1"=2' V

In the event that any items of cultural or archaeological significance are encountered during construction, Contractor shall stop work immediately and contact David Kroskie, Region 2 Cultural Resources Coordinator: david.kroskie@tpwd.texas.gov / 512-924-8953.

TEXAS PARKS & WILDLIFE

STATE OF TEXAS
ROBERT A. HILL
93655
LICENSED
PROFESSIONAL ENGINEER
4/23/2021

OMEGA ENGINEERS, INC.
16340 PARK TEN PLACE, Ste. #325
HOUSTON TEXAS, 77084
OMEGAENGINEERS.COM
TX PE Firm Reg. No. F-2147
P:281 647 9182 F:281 647 9184

MATHIS FISHERIES OFFICE

AT LAKE CORPUS CHRISTI, MATHIS, TEXAS

PROJECT NUMBER: 127144

DATE: 4/23/21
DESIGNED BY: RAH
DRAWN BY: RAH
REVIEWED BY:
REVISED:
REVISED:

SHEET TITLE

SITE UTILITIES

SHEET NUMBER

C.006

PERCENTAGE: BID ISSUE

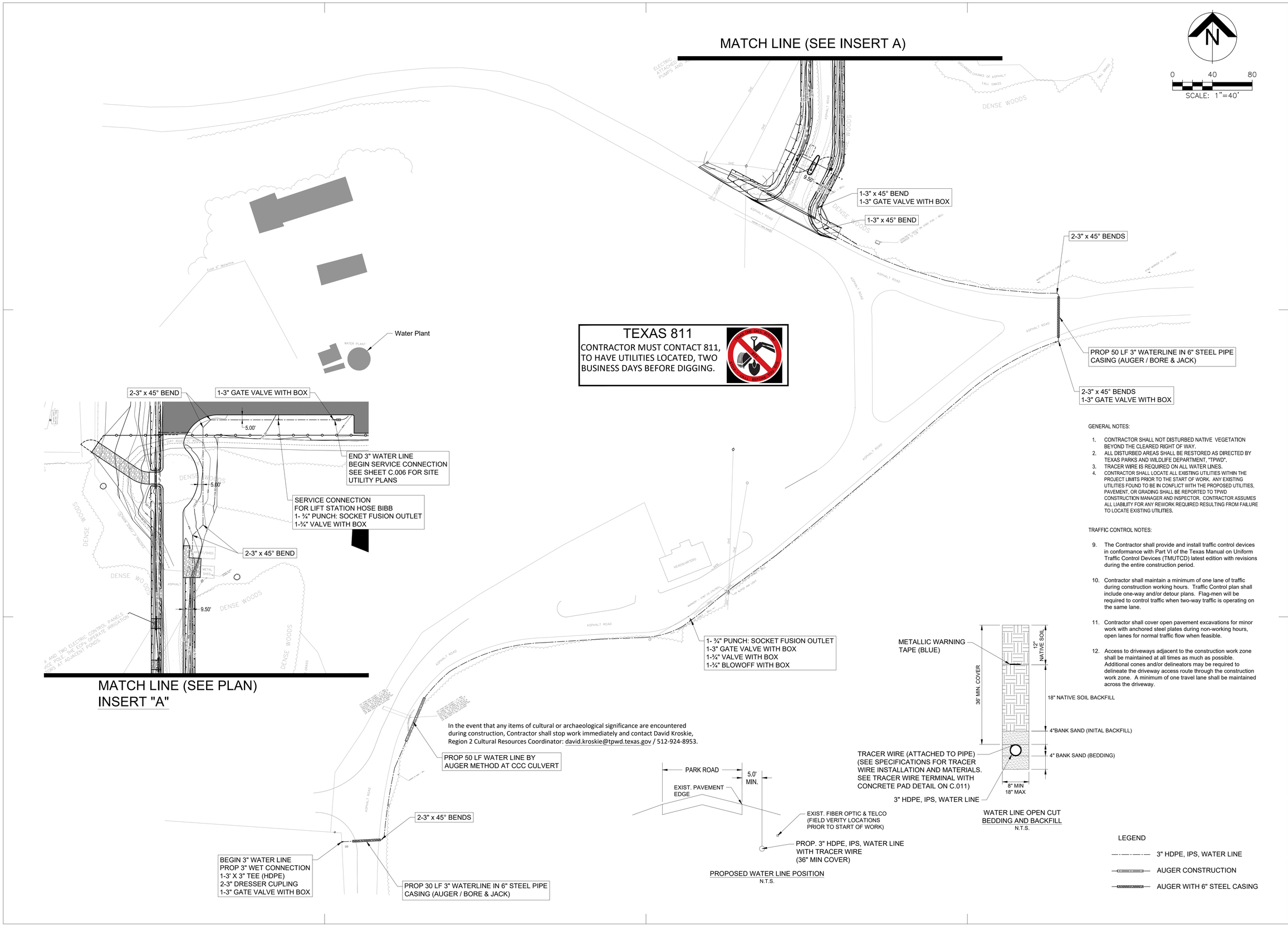

GENERAL NOTES:

1. CONTRACTOR SHALL NOT DISTURBED NATIVE VEGETATION BEYOND THE CLEARED RIGHT OF WAY.
2. ALL DISTURBED AREAS SHALL BE RESTORED AS DIRECTED BY TEXAS PARKS AND WILDLIFE DEPARTMENT, "TPWD".
3. TRACER WIRE IS REQUIRED ON ALL WATER LINES.
4. CONTRACTOR SHALL LOCATE ALL EXISTING UTILITIES WITHIN THE PROJECT LIMITS PRIOR TO THE START OF WORK. ANY EXISTING UTILITIES FOUND TO BE IN CONFLICT WITH THE PROPOSED UTILITIES, PAVEMENT, OR GRADING SHALL BE REPORTED TO TPWD CONSTRUCTION MANAGER AND INSPECTOR. CONTRACTOR ASSUMES ALL LIABILITY FOR ANY REWORK REQUIRED RESULTING FROM FAILURE TO LOCATE EXISTING UTILITIES.

TRAFFIC CONTROL NOTES:

9. The Contractor shall provide and install traffic control devices in conformance with Part VI of the Texas Manual on Uniform Traffic Control Devices (TMUTCD) latest edition with revisions during the entire construction period.
10. Contractor shall maintain a minimum of one lane of traffic during construction working hours. Traffic Control plan shall include one-way and/or detour plans. Flag-men will be required to control traffic when two-way traffic is operating on the same lane.
11. Contractor shall cover open pavement excavations for minor work with anchored steel plates during non-working hours, open lanes for normal traffic flow when feasible.
12. Access to driveways adjacent to the construction work zone shall be maintained at all times as much as possible. Additional cones and/or delineators may be required to delineate the driveway access route through the construction work zone. A minimum of one travel lane shall be maintained across the driveway.

TEXAS PARKS & WILDLIFE

STATE OF TEXAS
ROBERT A. HILL
93655
LICENSED
PROFESSIONAL ENGINEER
4/23/2021

OMEGA ENGINEERS, INC.
16340 PARK TEN PLACE, Ste. #325
HOUSTON TEXAS, 77084
OMEGAENGINEERS.COM
TX PE Firm Reg. No. F-2147
P:281 647 9182 F:281 647 9184

MATHIS FISHERIES OFFICE
AT LAKE CORPUS CHRISTI, MATHIS, TEXAS
PROJECT NUMBER: 127144

DATE: 4/23/21
DESIGNED BY: RAH
DRAWN BY: RAH
REVIEWED BY:
REVISED:
REVISED:

SHEET TITLE
WATERLINE PLAN

SHEET NUMBER
C.007

PERCENTAGE: BID ISSUE

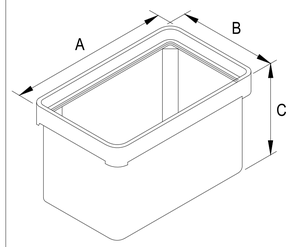

PULL BOX DETAIL

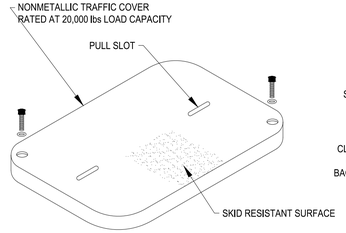

PULL BOX COVER DETAIL

1.) ALL CONDUIT SPECIFIED IN PLANS SHALL BE INSTALLED AT A MINIMUM DEPTH OF 30 INCHES AND SHALL ENTER BOXES FROM THE BOTTOM.
2.) BOX COVERS SHALL BE SECURED WITH TWO 1/2 INCH STAINLESS STEEL BOLTS.

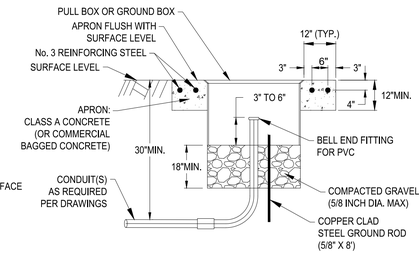

PULL BOX INSTALLATION DETAIL

TYPE	DIMENSIONS		
	A	B	C
PULL BOX (TYPE D)	32-1/4"±1"	19-1/4"±1"	22"±1"

PULL BOX DIMENSION DETAIL

HDPE REQUIREMENTS:

1. HDPE SHALL MEET THE REQUIREMENTS OF AASHTO M252 OR AASHTO M294 STANDARD SPECIFICATIONS FOR STORM SEWER PIPE.
2. HDPE SHALL HAVE CORRUGATED EXTERIOR AND AN SMOOTH INTERIOR.
3. HDPE PIPE JOINTS SHALL BE SILT-TIGHT. THE BELL SHALL BE AN INTEGRAL PARK OF THE PIPE. THE BELL SHALL INCORPORATE GASKETS MAKING IT SILT-TIGHT.

INLET AND CATCH BASIN REQUIREMENTS:

1. ALL INLETS AND CATCH BASINS SHALL BE PARK EQUIPMENT OR APPROVED EQUAL.
2. ALL CASTINGS SHALL BE EAST JORDAN IRON WORKS OR APPROVED EQUAL. CASTING SHALL BE MANUFACTURED IN THE UNITED STATES OF AMERICA.
3. ALL CASTINGS SHALL BE RATED FOR H20 LOADING.

NOTES:

1. THE METHOD OF INSTALLING PVC, HDPE AND CONCRETE PIPE SEWERS SHOWN HEREON TO BE USED ONLY WHERE SOIL CONDITIONS ARE SATISFACTORY.
2. MIN TRENCH WIDTH SHALL BE PIPE OD PLUS AN ALLOWANCE "A" FOR THE NOMINAL PIPE SIZE:

NOMINAL PIPE SIZE	"A"
LESS THAN 18"	18"
24" – 30"	24"

3. MAX TRENCH WIDTH SHALL NOT BE GREATER THAN MIN TRENCH WIDTH PLUS 24 INCHES, UNLESS OTHERWISE NOTED.
4. CEMENT STABILIZED SAND SHALL BE 200 PSI, 1.5 SACK/CY.

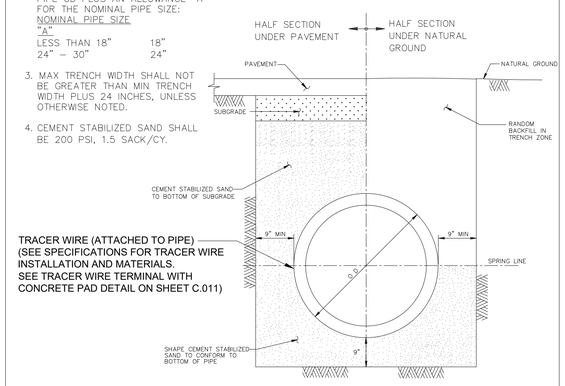

1 STORM AND SANITARY SEWER BEDDING AND BACKFILL

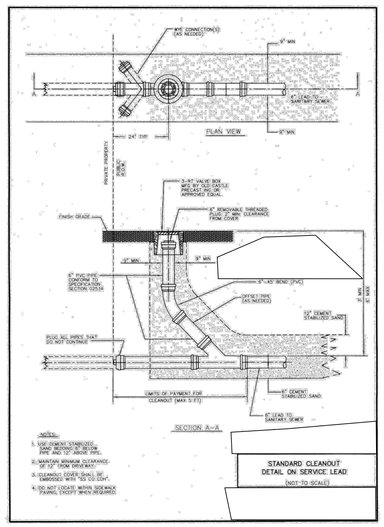

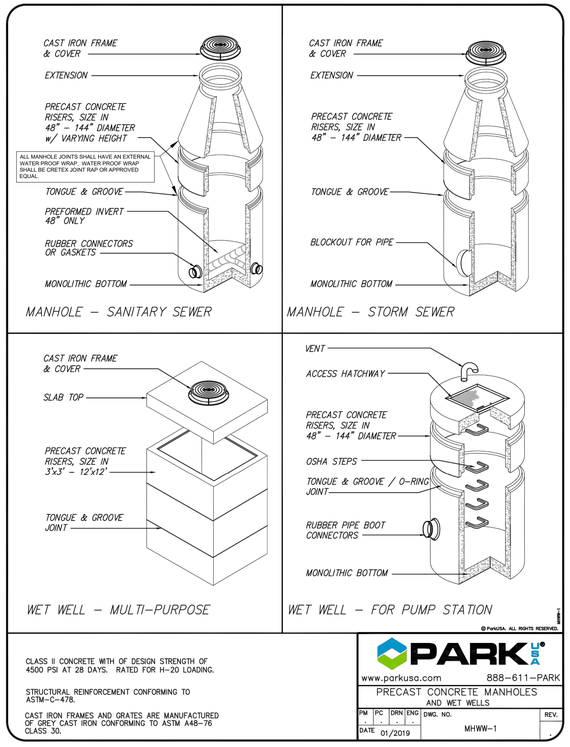

CLASS II CONCRETE WITH OF DESIGN STRENGTH OF 4500 PSI AT 28 DAYS. RATED FOR H-20 LOADING.

STRUCTURAL REINFORCEMENT CONFORMING TO ASTM-C-478.

CAST IRON FRAMES AND GRATES ARE MANUFACTURED OF GREY CAST IRON CONFORMING TO ASTM A48-76 CLASS 30.

PRECAST CONCRETE MANHOLES AND WET WELLS

PM	PC	DRN	ENG	DWG. NO.	REV.
-	-	-	-	MHWW-1	-

DATE 01/2019

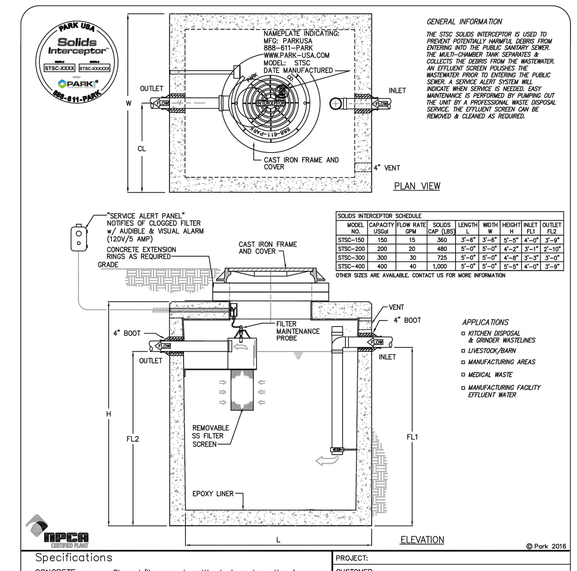

SOLIDS INTERCEPTOR SCHEDULE								
MODEL NO.	CAPACITY USGal	FLOW RATE GPM	SOLIDS CAP. (LBS)	LENGTH L	WIDTH W	HEIGHT H	INLET FL1	OUTLET FL2
STSC-150	150	15	360	3'-6"	5'-6"	5'-0"	4'-0"	3'-9"
STSC-200	200	20	480	5'-0"	5'-0"	4'-3"	3'-1"	2'-10"
STSC-300	300	30	725	5'-0"	5'-0"	4'-8"	3'-3"	3'-0"
STSC-400	400	40	1,000	5'-0"	5'-0"	5'-3"	4'-0"	3'-9"

OTHER SIZES ARE AVAILABLE. CONTACT US FOR MORE INFORMATION

Specifications

CONCRETE : Class I/II concrete with design strength of 4500 PSI at 28 days. Unit is of monolithic construction at floor, first stage of wall and baffle with sectional riser to required depth. gross empty weight of approximately indicated.

REINFORCEMENT: Grade 60 reinforced with steel rebar conforming to ASTM A615 on required centers or equal. Structural design is based on AASHTO HS20 loading.

C.I. CASTINGS: Manhole frames, covers or grates are manufactured of grey cast iron conforming to ASTM A48-76 Class 30. Manhole shall have 24 inch inside diameter and be traffic duty.

Engineering Data

Interceptor is structurally and hydraulically engineered conforming to UPC/IPC Plumbing Codes. Nominal liquid capacity as indicated.

Manufacturer shall provide buoyancy calculations certified by a licensed engineer upon request. Field excavation and preparation shall be completed prior to delivery of interceptor. Use dimensional data as shown.

PROJECT:
CUSTOMER:
ENGINEER:
PROJ #:
ORDER #:
DATE:

888.611.PARK
www.parkusa.com
DESIGN FOR WATER

SOLIDS INTERCEPTOR
MODEL STSC 150 THRU 400 GAL

PM	DRN	CHK	DWG. NO.	REV.
-	-	-	STSC–1	A

DATE 04/16

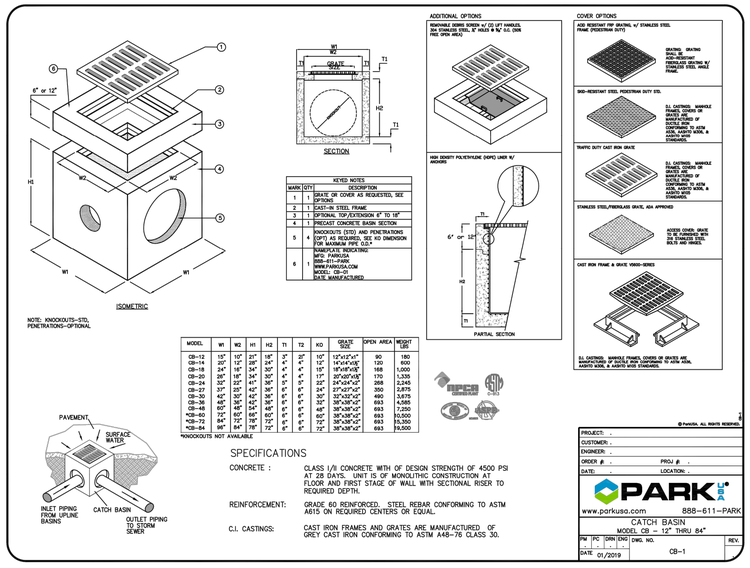

NOTE: KNOCKOUTS–STD, PENETRATIONS–OPTIONAL

KEYED NOTES		
MARK	QTY	DESCRIPTION
1	1	GRATE OR COVER AS REQUESTED, SEE OPTIONS
2	1	CAST–IN STEEL FRAME
3	1	OPTIONAL TOP EXTENSION 6" TO 18"
4	1	PRECAST CONCRETE BASIN SECTION
5	4	KNOCKOUTS (STD) AND PENETRATIONS (OPTIONAL) AS REQUIRED, SEE KO DIMENSION FOR LOCATIONS & O.D.
6	1	NAMEPLATE INDICATING: MFG: PARKUSA 888–611–PARK WWW.PARKUSA.COM MODEL: CB–XX DATE MANUFACTURED

MODEL	W1	W2	H1	H2	T1	T2	KO	GRATE SIZE	OPEN AREA	WEIGHT LBS
CB–12	15"	10"	21"	18"	3"	3"	10"	12"x12"x1"	80	160
CB–15	18"	13"	24"	21"	4"	4"	10"	15"x15"x1.25"	120	1,000
CB–18	24"	16"	34"	30"	4"	4"	12"	18"x18"x1.5"	168	1,000
CB–20	25"	18"	34"	30"	4"	4"	17"	20"x20"x1.5"	170	1,335
CB–24	32"	23"	41"	36"	5"	5"	17"	24"x24"x2"	288	2,245
CB–27	37"	25"	43"	38"	6"	6"	24"	27"x27"x2"	350	2,875
CB–30	42"	30"	43"	38"	6"	6"	30"	32"x32"x2"	490	3,875
CB–36	48"	36"	43"	38"	6"	6"	33"	38"x38"x2"	693	4,585
CB–48	60"	48"	54"	48"	6"	6"	40"	38"x38"x2"	693	7,250
*CB–60	72"	60"	66"	60"	6"	6"	60"	38"x38"x2"	693	10,500
*CB–72	84"	72"	78"	72"	6"	6"	72"	38"x38"x2"	693	15,350
*CB–84	96"	84"	78"	72"	6"	6"	72"	38"x38"x2"	693	19,500

*KNOCKOUTS NOT AVAILABLE

SPECIFICATIONS

CONCRETE : CLASS I/II CONCRETE WITH OF DESIGN STRENGTH OF 4500 PSI AT 28 DAYS. UNIT IS OF MONOLITHIC CONSTRUCTION AT FLOOR AND FIRST STAGE OF WALL WITH SECTIONAL RISER TO REQUIRED DEPTH.

REINFORCEMENT: GRADE 60 REINFORCED. STEEL REBAR CONFORMING TO ASTM A615 ON REQUIRED CENTERS OR EQUAL.

C.I. CASTINGS: CAST IRON FRAMES AND GRATES ARE MANUFACTURED OF GREY CAST IRON CONFORMING TO ASTM A48–76 CLASS 30.

PROJECT:
CUSTOMER:
ENGINEER:
ORDER #: PROJ #:
DATE: LOCATION:

www.parkusa.com 888–611–PARK

CATCH BASIN
MODEL CB – TYP. 84"

PM	PC	DRN	ENG	DWG. NO.	REV.
-	-	-	-	CB–1	-

DATE 01/2019

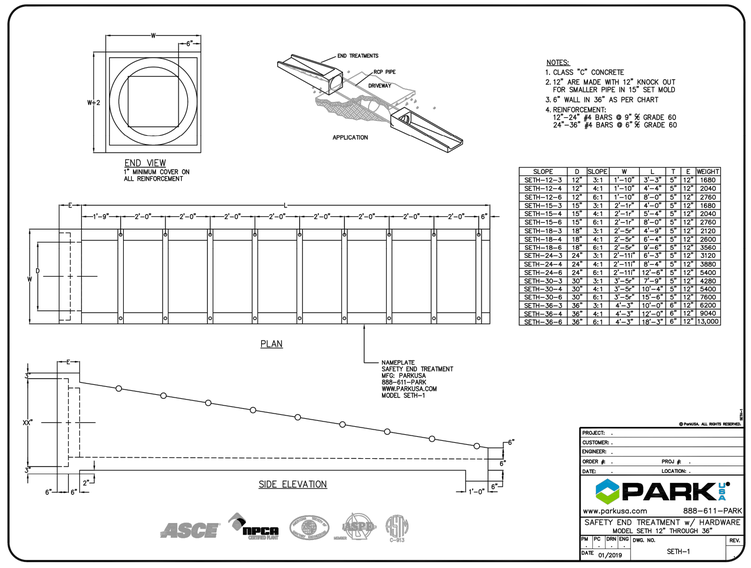

NOTES:
1. CLASS "C" CONCRETE
2. 12" ARE MADE WITH 12" KNOCK OUT FOR SMALLER PIPE IN 15" SET MOLD
3. 6" WALL IN 36" AS PER CHART
4. REINFORCEMENT:
12"–24" #4 BARS @ 9" % GRADE 60
24"–36" #4 BARS @ 6" % GRADE 60

SLOPE	D	SLOPE	W	L	T	E	WEIGHT
SETH–12–3	12"	3:1	1'–10"	3'–3"	5"	12"	1680
SETH–12–4	12"	4:1	1'–10"	4'–4"	5"	12"	2040
SETH–12–6	12"	6:1	1'–10"	8'–0"	5"	12"	2760
SETH–15–3	15"	3:1	2'–1"	4'–0"	5"	12"	1680
SETH–15–4	15"	4:1	2'–1"	5'–4"	5"	12"	2040
SETH–15–6	15"	6:1	2'–1"	8'–0"	5"	12"	2760
SETH–18–3	18"	3:1	2'–5"	4'–9"	5"	12"	2120
SETH–18–4	18"	4:1	2'–5"	6'–4"	5"	12"	2600
SETH–18–6	18"	6:1	2'–5"	9'–6"	5"	12"	3560
SETH–24–3	24"	3:1	2'–11"	6'–3"	5"	12"	3120
SETH–24–4	24"	4:1	2'–11"	8'–4"	5"	12"	3880
SETH–24–6	24"	6:1	2'–11"	12'–6"	5"	12"	5400
SETH–30–3	30"	3:1	3'–5"	7'–9"	5"	12"	4280
SETH–30–4	30"	4:1	3'–5"	10'–4"	5"	12"	5400
SETH–30–6	30"	6:1	3'–5"	15'–6"	5"	12"	7600
SETH–36–3	36"	3:1	4'–3"	10'–0"	6"	12"	6200
SETH–36–4	36"	4:1	4'–3"	12'–0"	6"	12"	9040
SETH–36–6	36"	6:1	4'–3"	18'–3"	6"	12"	13,000

PROJECT:
CUSTOMER:
ENGINEER:
ORDER #: PROJ #:
DATE: LOCATION:

www.parkusa.com 888–611–PARK

SAFETY END TREATMENT w/ HARDWARE
MODEL SETH 12" THROUGH 36"

PM	PC	DRN	ENG	DWG. NO.	REV.
-	-	-	-	SETH–1	-

DATE 01/2019

3671Z 3671A Assembly

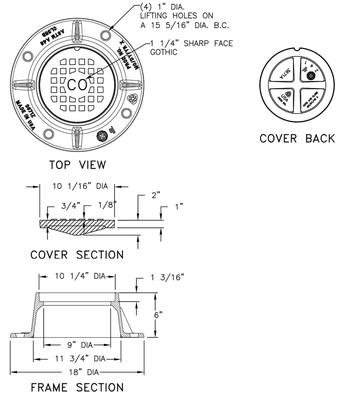

Product Number
00367101
Design Features
-Materials
Cleanout/Monument Box Frame
Gray Iron (CL35B)
Cleanout/Monument Box Cover
Gray Iron (CL35B)

-Design Load
Heavy Duty
-Open Area
n/a
-Coating
Dipped
-✓/ Designates Machined Surface

Certification
- ASTM A48
-
-Country of Origin:USA

Major Components
00367111
00367127

Drawing Revision
05/16/2005 Designer: DEW
09/12/2016 Revised By: DVD

Disclaimer
Weights and/or dimensions (inches/mm) are approximate provided for your guidance. We reserve the right to modify specifications without prior notice.

CONFIDENTIAL: This drawing is the property of EJ GROUP, INC. It contains proprietary information, registered marks, patents, trade secret information, and/or know how that is the property of EJ GROUP, Inc. Copyright © 2012 EJ GROUP, Inc. All rights reserved.
EJ GROUP, INC.
800 626-4653
ejgp.com

TEXAS PARKS & WILDLIFE

STATE OF TEXAS
ROBERT A. HILL
93655
LICENSED PROFESSIONAL ENGINEER
4/23/2021

OMEGA ENGINEERS, INC.
16340 PARK TEN PLACE, Ste. #325
HOUSTON TEXAS, 77084
OMEGAENGINEERS.COM
TX PE Firm Reg. No. F-2147
P:281 647 9182 F:281 647 9184

MATHIS FISHERIES OFFICE
AT LAKE CORPUS CHRISTI, MATHIS, TEXAS
PROJECT NUMBER: 127144

DATE: 4/23/21
DESIGNED BY: RAH
DRAWN BY: RAH
REVIEWED BY:
REVISED:
REVISED:

SHEET TITLE
DETAILS

SHEET NUMBER
C.008

PERCENTAGE: BID ISSUE

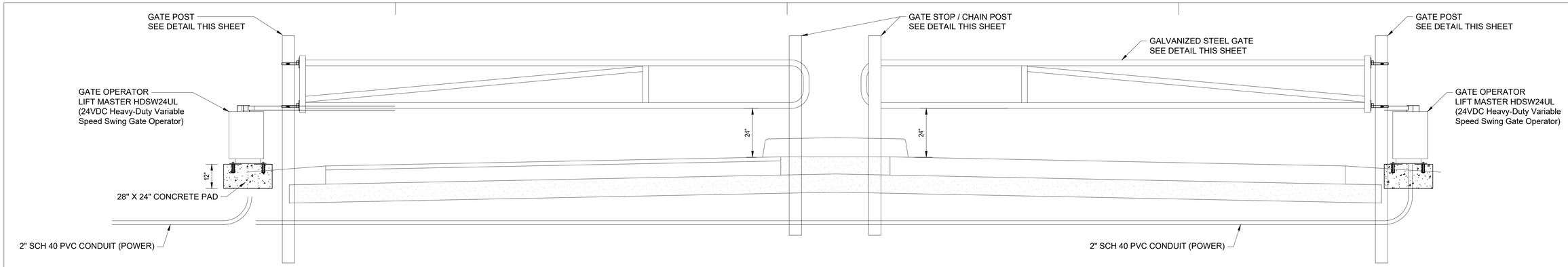

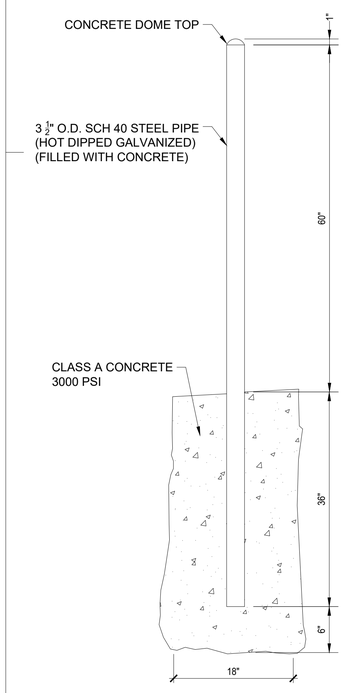

GATE STOP / CHAIN POST DETAIL

N.T.S.

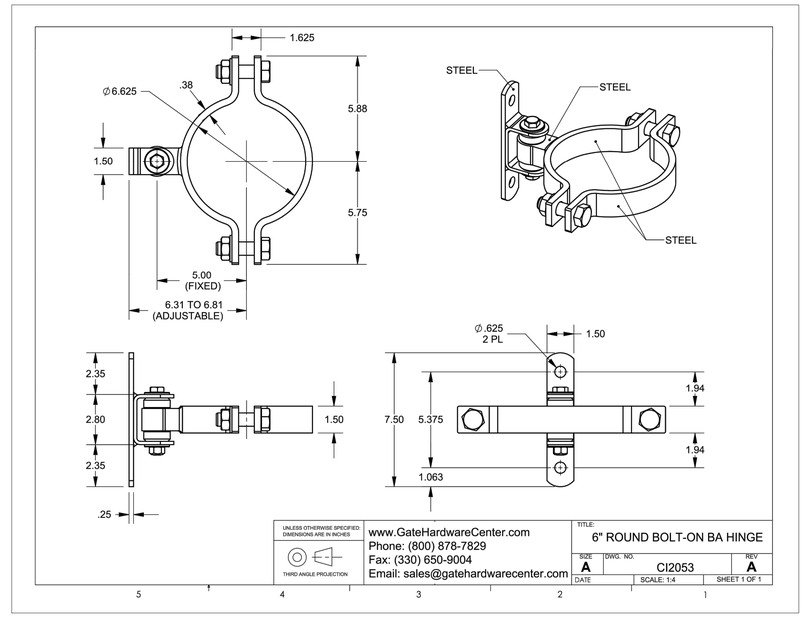

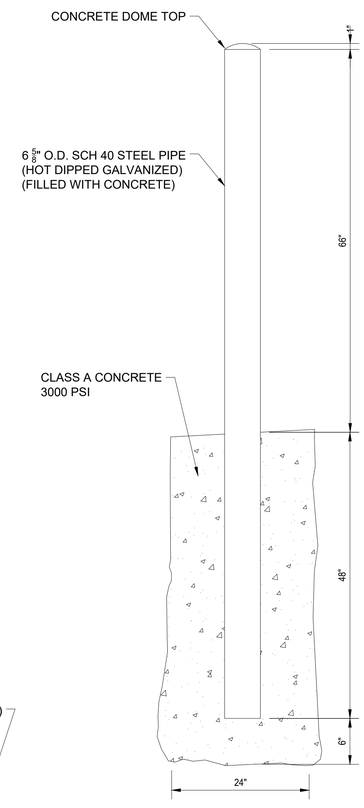

GATE POST DETAIL

N.T.S.

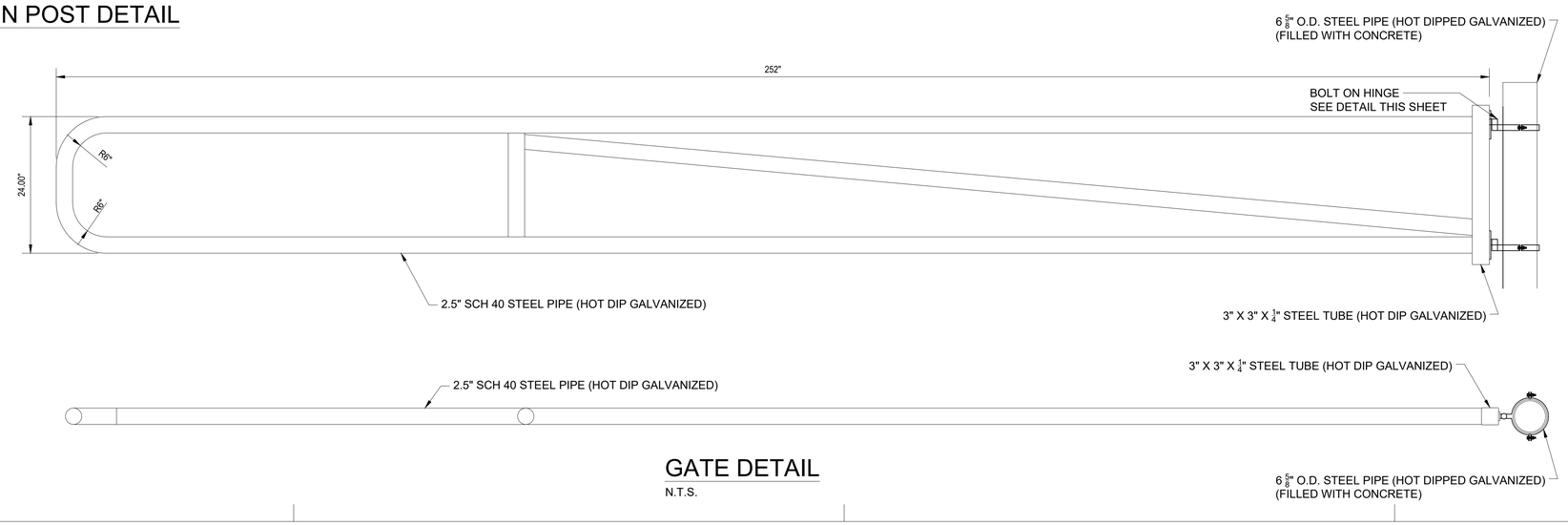

GATE DETAIL

N.T.S.

TEXAS PARKS & WILDLIFE

STATE OF TEXAS
ROBERT A. HILL
93655
LICENSED
PROFESSIONAL ENGINEER
4/23/2021

OMEGA ENGINEERS, INC.
16340 PARK TEN PLACE, Ste. #325
HOUSTON TEXAS, 77084
OMEGAENGINEERS.COM
TX PE Firm Reg. No. F-2147
P:281 647 9182 F:281 647 9184

MATHIS FISHERIES OFFICE

AT LAKE CORPUS CHRISTI, MATHIS, TEXAS

PROJECT NUMBER: 127144

DATE: 4/23/21
DESIGNED BY: RAH
DRAWN BY: RAH
REVIEWED BY:
REVISED:
REVISED:

SHEET TITLE

DETAILS

SHEET NUMBER

C.009

PERCENTAGE: BID ISSUE

Specifications

Packaged Lift Station - Grinder Pumps

1.0 Scope

The lift station shall be a factory-built package type complete with the wet well structure, pumps, piping, valves, accessories, and electrical controls supplied from one manufacturer with unit responsibility. The structure and all internal components shall be field assembled and tested by the manufacturer's factory crews. Unless otherwise approved in writing a minimum of ten days prior to the bid date the lift station shall be as manufactured buy Process Engineered Equipment Company (PEECO), Corpus Christi, Texas or ITT Water & Wastewater, Flygt Products.

2.0 Wet Well

The wet well structure shall be precast concrete (RCP) with diameter and depth dimensions as shown on the plans. The wet well bottom shall the concrete with provisions for the pump discharge connections in the bottom. The top of the basin shall be equipped with a 3- inch lip ring that will allow bolting of the aluminum lob in place. Threaded couplings shall be provided for connection of electrical conduits to each of the pumps and to the level control float switches.

3.0 Pumps

3.1 General

The pumps shall be 3.1 HP minimum, heavy duty submersible grinder type suitable for continuous operation at a 47 GPM with 64 feet TDH utilizing 230-volt, 1 phase power supply/ The pumps shall be capable of receiving raw domestic wastewater to a slurry with maximum ¼ inch solids prior to pimping. Mechanical and electrical design shall be suitable for continuous operating periods more than two hours four times per day, seven days per week. Designs for common residential service will not be acceptable.

Support legs shall be provided to allow setting of pumps directly on the wet well floor. Accessory components and hardware required inside the wet well shall be cast iron, 304 stainless steel, aluminum alloy or nonmetallic material. Coated or galvanized fabricated steel inside the wet well will not be acceptable.

3.2 Pump Design

Major pump components shall be Class 30 cast iron with machined mating surfaces utilizing nitrile O-rings for watertight sealing. The shaft shall be nickel chrome stainless steel, A151 420 or equal, single piece, full diameter throughout with no machined shoulders. The impeller shall be multivane, semi-open, cast iron ASTM A48-76, Class 30B and connected to the shaft by a tapered collet and locking screw. Cutting components shall consist of a rotating cutter of minimum 550 Brinnel chrome alloy cast iron and a hardened 316L stainless steel stationary cutter.

Shaft sealing shall be accomplished by two independent mechanical seals operating in tandem. The upper seal shall isolate the seal oil chamber from the stator and shall be equipped with a stationary carbon ring and a rotating ceramic ring. The lower seal shall prevent pimped liquid from entering the seal oil chamber and shall be furnished with stationary and rotating rings of tungsten carbide. Because of the heavy duty, continuous operation anticipated lower seals of ceramic or carbon will not be acceptable.

3.3 Motor Design

The pump motor shall be specifically designed for continuous duty, high torque grinder pimp application and capable of operating for extended periods, one hour or more, at the pimp design conditions without the need for submergence for cooling. The stator yoke and frame shall be cast iron with external cooling fins. Internal machining shall be high quality and the stator shall be heat shrink fitted to the yoke. Insulation shall be full Class F and shall provide for an operating rise of 80 degree Centigrade plus a minimum 1.15 service factor.

Protective sensors for indication of high stator temperature and moisture leakage shall be provided in the motor. A minimum of two thermal sensors shall be provided in the stator windings. The leakage detector shall be mounted inside the stator housing and shall detect water leakage or oil entry from the seal chamber. Sensors shall be wired through the pump control panel. The control module shall provide separate indication and contact closure for high stator temperature leakage.

The power cable entry assembly shall be designed to allow simple removal and replacement of the power cable. Sealing shall be accomplished by mechanical compression of an elastomeric grommet by a brass gland nut without need for specific torque requirements. Cable entry sealing by epoxy or silicone compounds will not be acceptable.

4.0 Piping

Each pump shall discharge to the treatment plant through a 2-inch diameter line. Riser piping inside the wet well shall be Schedule 80 PVC. Check valves shall be the ball type, and of all PVC construction and provided with unions on each end to allow removal. Shut off valves shall be manually operated ball type with bronze body and Teflon seats.

5.0 Accessories

5.1 Entrance Cover

The wet well shall be provided with a round access cover fabricated of ¼ inch 606 IT aluminum deck plate and reinforced with aluminum angle to accommodate design live overload of 150 pounds per square foot. The cover shall be furnished with a flush fitting, hinged access door, and equipped with an automatic latch to hold the door open. The access door shall be equipped with a retractable lift handle and a padlocking post. An angle frame shall be provided around the access door for mounting a float cable rack and power cable supports. All hardware shall be 316 stainless steel. Aluminum to be mounted directly on or embedded in concrete shall be protected with a bitumastic coating.

5.2 Pump Lifting Cables

Each pump shall be equipped with a 3/16-inch, 7/19 strand, 304 stainless steel, plastic coated lifting cable, and attachment hardware. Each cable shall extend a minimum of six feet above the station top deck.

5.3 Pump Lifting Hoist

A removable swing type hoist shall be provided. The hoist shall be supported by a socket mounted in the aluminum cover and shall be equipped with a manual, crank type winch. The hoist/winch assembly shall be suitable for 200 pounds lifting load.

5.4 Cable Hangers

A hanger bracket fabricated of 304 stainless steel shall be mounted inside the wet well cover for support of two pimp power cables, three bulb type level sensors, and two pump lift cables.

5.5 Hardware

All bolts, nuts, washers, expansion type anchors and other miscellaneous hardware used inside the wet well shall be 304 stainless steel or approved equal for corrosion resistance.

6.0 Electrical

6.1 Control Panel

A duplex control panel shall be provided for automatic pump control utilizing a 230-volt, three phase, 1 wire power supply with separate ground. The panel shall be a factory wired and tested by the lift station manufacturer prior to shipment. Components and operating functions of the panel shall include the following:

a) NEMA 4X Stainless steel enclosure.

b) Terminals for incoming power, neutral and ground and for external control devices.

c) Thermal/Magnetic circuit breakers for each pump

d) Magnetic starters rated for continuous duty at motor nameplate horsepower.

e) Hand-Off-Auto switch for each pump wired to bypass all automatic controls except overloads when operated in the "hand" position. Switches shall be full size NEMA 4X nonmetallic.

f) Pump failure relay with manual reset to indicate the "lag" pump function has been called due to high water level. This relay shall activate an alarm light, 60 watts with red plastic lens externally mounted for clear visibility. The alarm light shall function as a common alarm light to indicate high water level has occurred due to pump or control malfunction, power failure, high peak flows, or other causes.

g) Run time for each pump calibrated in tenths of hours mounted on a separate panel inside the control enclosure.

h) Duplex alternating relay for automatic pump alternation after each pump cycle. The alternator shall be equipped and wired to allow a five second time delay prior to alternation after receiving the "Off/Alternate" level sensor.

a) Lightning arrestor, external mounted 230-volt, single phase.

6.2 Level Control

The lift station pumps shall be automatically controlled by mercury bulb type level sensors mounted in the wet well. Level sensors shall be the non-floating type with no external weights or attachment required for proper operation and shall allow adjustment of operating levels from the station top deck. Contact ratings shall be rated 8 amps minimum at 240 volts.

6.3 Mounting Rack, Control Panel

A panel mounting rack shall be provided by the Electrical Contractor as indicated on the plans.

7.0 Installation

7.1 Lift Station Manufacturer

The lift station shall be assembled at the job site by the manufacturer's factory crews including the following:

a) Assemble, seal, and finish coat precast concrete wet well.

b) Install pumps, piping, accessories, control panel, and level controls.

c) Connect wiring from pumps and level controls to the control panel.

7.2 Contractor (Purchaser)

The Contractor (Purchaser) shall provide the following in accordance with the Plans and/or drawings to be provided by the lift station manufacturer:

a) Excavation, backfill, dewatering and site preparation

b) Sand or pea gravel cushion for leveling

c) Crane for unloading and setting

d) Access to site for trucks and crane

e) Water to fill and test.

f) Electrical power supply and ground to incoming terminals in the control panel including wire, conduit, meter loop, disconnect poles, and other items as indicated on the Plans.

8.0 Start-Up

The lift station manufacturer shall field test and adjust all components and accessories, put the station in operation and notify the Engineer or Owner that the station is ready for operation.

9.0 Operator Training

The lift station manufacturer shall instruct the Owner's operator or representative in the function, design operation and troubleshooting of mechanical and electrical equipment and provide two operation and maintenance manuals. The Owner shall make the operator or representative available periodically during installation and for four hours during start-up.

10.0 Warranty

The lift station manufacturer shall warrant all equipment materials and labor furnished to be free of defects or failure due to normal operation for a period of eighteen months from the date of installation of twelve months from the date of initial operation, whichever occurs first. Defect of failures occurring during the warranty period will be repaired or replaced by the manufacturer at no cost to the owner.

Notes:

1. Install a NEMA 4X non-metallic junction box with an aluminum backing plate below the control panel on the same common rack system. Size box per N.E.C. for the conduit sizes and number of conductors & terminations in the box. All power, control, and grounding terminal blocks shall have a sufficient number and size of termination points for single point connection of all conductors.

A. Install terminal blocks on the back panel of the J-Box.

B. The terminal blocks shall be pressure plate din rail type terminal blocks, and these shall be used for the termination of any single-conductor control panel wiring that routes to the wet well and for the wires in the cables from the float switches and pumps in the wet well.

C. All power, control, and grounding terminal blocks shall have a sufficient number and size of termination points for single point connection of all conductors. Provide the terminal block manufacturer's jumper tabs for any terminations that require multiple wire connections such as ground wires.

D. Provide a separate ground buss for the termination for all equipment grounding conductors.

E. Permanently identify the terminal blocks and the conductors with wire markers equal to brady. The identification number shall match the wire numbers shown on the control panel fabricator's schematic diagram for the control panel.

2. For these two conduits: Install schedule 80 PVC conduit between the control panel and wet well at the depths specified in the trenching details for electrical conduit.

3. Provide RMC nipples with a conduit seal fitting (to be filled with chico sealing compound) between the J-box and control panel. Single conductors shall be installed from the control panel to the junction box terminal strips and ground buss. Coad the exposed portions of the conduit nipples with cold galvanizing compound.

4. In the J-Box and in the wet well: seal the conduits from the J-box to the wet well with duct seal or hard setting closed cell foam to prevent the transmission of corrosive gases from the wet well.

5. All hardware for conduit support, enclosure mounting rack assembly & fabrication or for other needs shall be stainless steel. All conduit & conduit fittings shall be PVC unless noted otherwise. No metal conduit, metal enclosures, metal rack materials or other metal items shall be installed for the lift station control panel installation other than the stainless-steel hardware.

6. Install a NEMA 4X, non-metallic junction box with an aluminum interior back panel for the proper termination of the power wiring and lightning/surge protection wiring for the lift station. The junction box shall be sized per N.E.C. to properly accept the number and sizes of the wiring installed in the box. All terminal blocks installed in the junction box shall have a sufficient number and size of termination points for single point connection of all conductors. Permanently identify each group of power terminal blocks to show the use of the blocks. Permanently identify the conductors with wire markers equal to brady. Install the following on the interior back panel.

A. Pressure plate din rail terminal blocks or power terminal blocks for the termination of the power wiring, surge protector wiring, and lighting arrestor wiring.

B. Equipment ground bar.

C. Isolated ground bar for grounding electrode conductor surge protector, and lightning arrestor ground. Note: This entire system must be isolated.

D. Mount the surge protector and the lighting arrestor to the bottom of the junction box.

E. Install ½" PVC for the #6 AWG, insulated grounding electrode conductor (GEC). Attachment the GEC to the ground ROD using the exothermic weld.

F. Supply a commercial grade lightning protector with neutral and ground wires and supply a surge capacitor with neutral and ground wires as determined by the voltage rating of the electrical service lift station equipment. If the power supply is 120/240 VAC, single phase: install delta lightning arrestors model #LA 302G Lightning protector with neutral and ground and model #CA 302RG surge capacitor. If the power supply is 3-phase install the corresponding 3-phase, delta lightning arrestor brand or equal lightning arrestor and surge capacitor.

7. The new double-throw, non-fused disconnect switch shall match the rating of the pumping system and shall be supplied with a solid neutral bar and a separate ground buss. Supply this switch in a NEMA 4X, stainless steel enclosure. Connect the normal power feed to the top of the switch, the generator receptacle feed to the bottom of the switch, and the load wiring to the center connections in the switch.

8. The new generator receptacle shall match the rating of the pumping system. The receptacle shall be a pin and sleeve style receptable or twist-lock style receptacle with a separate ground connection. Pin and sleeve receptacles shall have style 2 connections providing for a separate ground wire pin connection in the receptacle and in the mating plug. The generator receptacle shall be supplied in a weatherproof, non-metallic box with a weatherproof, non-metallic cover.

9. the new generator receptacle shall match the mating plug that is installed on TPWD's existing trailer mounted generator. The contractor shall coordinate that the lift station generator receptacle mates with TPED's generator mating plug.

PROTECTIVE GRATING PANEL

HALLIDAY PRODUCTS

www.HallidayProducts.com
Phone 800-298-1027
Fax 407-298-4534
Sales@HallidayProducts.com

STANDARD FEATURES:

- ALUMINUM "I" BAR CONSTRUCTION
- ALL T-316 STAINLESS STEEL HARDWARE
- LOCKABLE WITH OWNER-SUPPLIED PADLOCK
- HINGED WITH POSITIVE LATCH TO MAINTAIN UPRIGHT POSITION
- LOAD RATED CONSISTENT WITH ACCESS COVER
- VIEW AREA FOR OBSERVATION AND LIMITED MAINTENANCE
- SAFETY ORANGE POWDER-COATED FINISH
- NUTRAIL W/S.STL. SPRING NUTS (300 LBS. PSF [1464 KG. PER METER] LOADED DOORS ONLY)
- LIFETIME GUARANTEE

HALLIDAY PRODUCTS PROTECTIVE GRATING PANEL IS EQUIPPED WITH ALL T-316 STAINLESS STEEL HARDWARE. THIS LOCKABLE GRATING PANEL CAN BE FACTORY INSTALLED ON MOST MODELS IN OUR EXTENSIVE LINE OF QUALITY ACCESS COVERS. EACH GRATING PANEL IS POWDER COAT FINISHED IN SAFETY ORANGE COLOR, AND IS EQUIPPED WITH A T-316 STAINLESS STEEL POSITIVE LATCH WITH RELEASE HANDLE THAT SECURES THE GRATING PANEL IN THE OPEN POSITION. THE GRATING SUPPORT LEDGES FEATURE BUILT-IN NUT RAIL. EACH UNIT IS SUPPLIED WITH FOUR STAINLESS STEEL SPRING NUTS USED TO MOUNT PUMP BRACKETS AND CABLE HOLDERS.

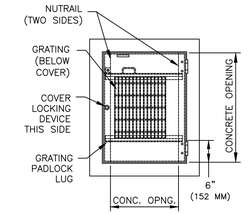

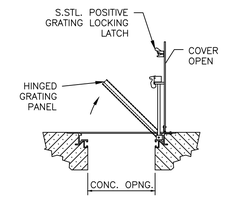

OPT-GRATE-N 07/29/05

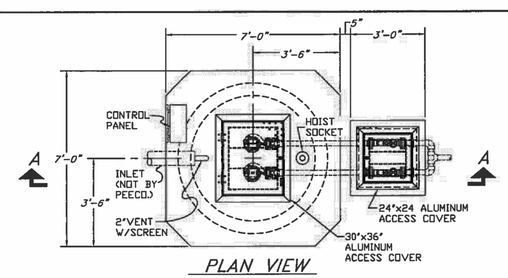

PLAN VIEW

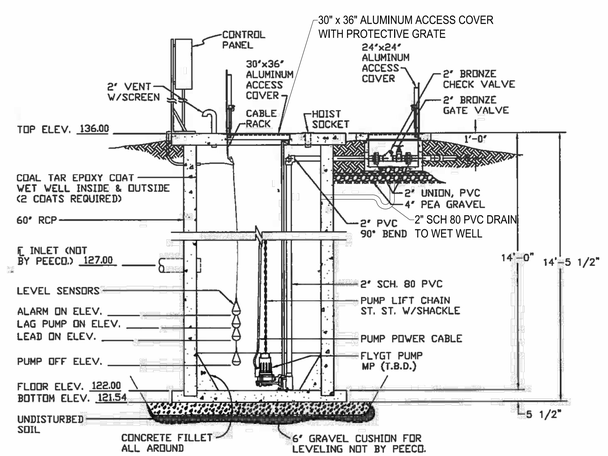

SECTION VIEW A-A

LIFT STATION EQUIPMENT DATA SHEET

PROJECT: LAKE CORPUS CHRISTI ST. PARK PEECO REFERENCE NO. 21-9014

STRUCTURE:
TYPE RCP 60" OVERALL DEPTH 14'-5 1/2"
SHIPPING PIECES 3 MAXIMUM PIECE WEIGHT 13,500 LBS.
PEECO DRAWING NO.

PUMPS
MANUFACTURE: FLYGT -- MODEL: MP 3069
RATING: 2.3 HP 3320 RPM 230 VOLT 1 PHASE 10 AMP
PERFORMANCE CURVE
SERIAL NUMBERS:

ACCESSORIES:	MANUFACTURER/MODEL/SIZE
X CHECK VALVE	2" BRONZE
X GATE VALVE	2" BRONZE
X LEVEL SENSORS 4 REQUIRED	S.J. ELECTRO SYSTEM 30 SWI N.O.
X ACCESS COVER, WETWELL	HALLIDAY, ALUMINUM/ST. ST.
X ACCESS COVER, VALVE VAULT	HALLIDAY, ALUMINUM/ST. ST.
X PIPING, PUMP TO FLOOR	PVC 2" SCH. 80
X PIPING, HEADER	PVC 2" SCH. 80
X CABLE RACK	304 STAINLESS STEEL
X LIFT CHAIN	3/16"-304 ST. ST. W/SHACKLE

ELECTRICAL-LIFT STATION CONTROLLER
MANUFACTURER PEECO MODEL
INCOMING POWER: 230 VOLT 1 PHASE
PEECO DRAWING NO.

NOTES:

1. ECAVATION & BACKFILL NOT BY PEECO.
2. INCOMING POWER TO CONTROL PANEL NOT BY PEECO.
3. BALLAST, IF REQUIRED, NOT BY PEECO.
4. INFLUENT LINE NOT BY PEECO.
5. METERLOOP AND MAIN DISCONNECT NOT BY PEECO.
6. PURCHASER TO CONFIRM ALL ELEVATIONS AND PIPE LOCATIONS.

LIFT STATION AND VALVE BOX ACCESS COVERS SHALL BE LOCKABLE .

THE CONTROL AND ELECTRICAL PANEL BOXES SHALL BE LOCKABLE.

SHEET	LAKE CORPUS CHRISTI ST. PARK TX. PARKS & WILDLIFE DEPT. 60" RCP GRINDER LIFT STATION W/VALVE VAULT	PEECO DWG NO: 21-9014-01 SCALE: N.T.S. DATE: 03/05/21 DWN BY: L.C.G. APPROVED:	NO	DATE	REVISION

PEECO
PROCESS ENGINEERED EQUIPMENT CO.
438 MCBRIDE LANE
P.O. BOX 9549
361-289-8891
Corpus Christi, Texas 78469

TEXAS PARKS & WILDLIFE

STATE OF TEXAS
ROBERT A. HILL
93655
LICENSED
PROFESSIONAL ENGINEER
4/23/2021

OMEGA ENGINEERS, INC.
16340 PARK TEN PLACE, Ste. #325
HOUSTON TEXAS, 77084
OMEGAENGINEERS.COM
TX PE Firm Reg. No. F-2147
P:281 647 9182 F:281 647 9184

MATHIS FISHERIES OFFICE
AT LAKE CORPUS CHRISTI, MATHIS, TEXAS
PROJECT NUMBER: 127144

DATE: 4/23/21
DESIGNED BY: RAH
DRAWN BY: RAH
REVIEWED BY:
REVISED:
REVISED:

SHEET TITLE
DETAILS

SHEET NUMBER
C.010

PERCENTAGE: BID ISSUE

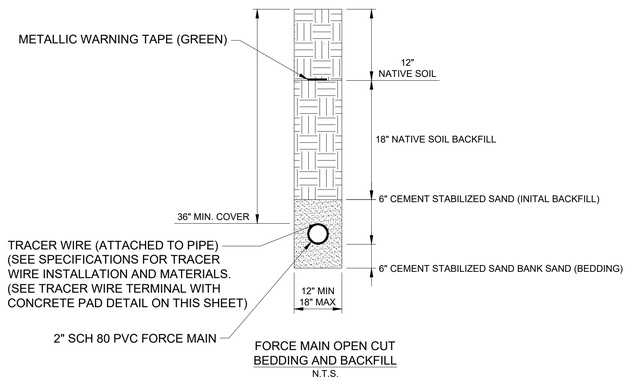

FORCE MAIN OPEN CUT BEDDING AND BACKFILL
N.T.S.

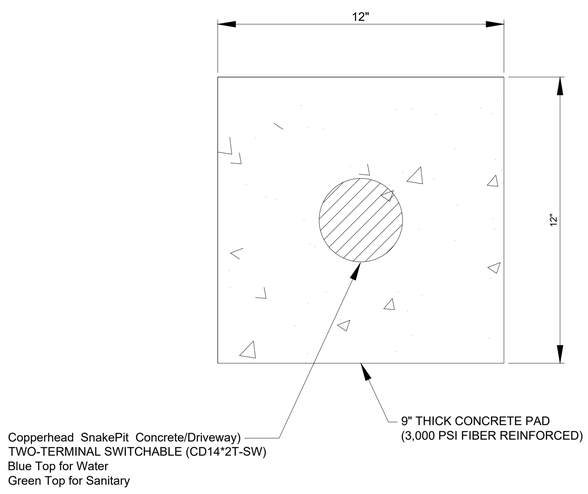

TRACER WIRE TERMINAL WITH CONCRETE PAD
N.T.S.

NOTES:

1. INSTALL A NEMA 4X NON–METALLIC JUNCTION BOX WITH AN ALUMINUM BACKING PLATE BELOW THE CONTROL PANEL ON THE SAME COMMON RACK SYSTEM. SIZE BOX PER N.E.C. FOR THE CONDUIT SIZES AND NUMBER OF CONDUCTORS & TERMINATIONS IN THE BOX. ALL POWER, CONTROL, AND GROUNDING TERMINAL BLOCKS SHALL HAVE A SUFFICIENT NUMBER AND SIZE OF TERMINATION POINTS FOR SINGLE POINT CONNECTION OF ALL CONDUCTORS.

   A. INSTALL TERMINAL BLOCKS ON THE BACK PANEL OF THE J–BOX.

   B. THE TERMINAL BLOCKS SHALL BE PRESSURE PLATE DIN RAIL TYPE TERMINAL BLOCKS AND THESE SHALL BE USED FOR THE TERMINATION OF ANY SINGLE–CONDUCTOR CONTROL PANEL WIRING THAT ROUTES TO THE WET WELL AND FOR THE WIRES IN THE CABLES FROM THE FLOAT SWITCHES AND PUMPS IN THE WET WELL.

   C. ALL POWER, CONTROL, AND GROUNDING TERMINAL BLOCKS SHALL HAVE A SUFFICIENT NUMBER AND SIZE OF TERMINATION POINTS FOR SINGLE POINT CONNECTION OF ALL CONDUCTORS. PROVIDE THE TERMINAL BLOCK MANUFACTURER'S JUMPER TABS FOR ANY TERMINATIONS THAT REQUIRE MULTIPLE WIRE CONNECTIONS SUCH AS GROUND WIRES.

   D. PROVIDE A SEPARATE GROUND BUSS FOR THE TERMINATION OF ALL EQUIPMENT GROUNDING CONDUCTORS.

   E. PERMANENTLY IDENTIFY THE TERMINAL BLOCKS AND THE CONDUCTORS WITH WIRE MARKERS EQUAL TO BRADY. THE IDENTIFICATION NUMBERING SHALL MATCH THE WIRE NUMBERS SHOWN ON THE CONTROL PANEL FABRICATOR'S SCHEMATIC DIAGRAM FOR THE CONTROL PANEL.

2. FOR THESE TWO CONDUITS: INSTALL SCHEDULE 80 PVC CONDUIT BETWEEN THE CONTROL PANEL AND WET WELL AT THE DEPTHS SPECIFIED IN THE TRENCHING DETAILS FOR ELECTRICAL CONDUIT.

3. PROVIDE RMC NIPPLES WITH A CONDUIT SEAL FITTING (TO BE FILLED WITH CHICO SEALING COMPOUND) BETWEEN THE J–BOX AND CONTROL PANEL. SINGLE CONDUCTORS SHALL BE INSTALLED FROM THE CONTROL PANEL TO THE JUNCTION BOX TERMINAL STRIPS AND GROUND BUSS. COAT THE EXPOSED PORTIONS OF THE CONDUIT NIPPLES WITH COLD GALVANIZING COMPOUND.

4. IN THE J–BOX AND IN THE WET WELL: SEAL THE CONDUITS FROM THE J–BOX TO THE WET WELL WITH DUCT SEAL OR HARD SETTING CLOSED CELL FOAM TO PREVENT THE TRANSMISSION OF CORROSIVE GASES FROM THE WET WELL.

5. ALL HARDWARE FOR CONDUIT SUPPORT, ENCLOSURE MOUNTING, RACK ASSEMBLY & FABRICATION OR FOR OTHER NEEDS SHALL BE STAINLESS STEEL. ALL CONDUIT & CONDUIT FITTINGS SHALL BE PVC UNLESS NOTED OTHERWISE. <u>NO METAL CONDUIT, METAL ENCLOSURES, METAL RACK MATERIALS OR OTHER METAL ITEMS SHALL BE INSTALLED FOR THE LIFT STATION CONTROL PANEL INSTALLATION OTHER THAN THE STAINLESS STEEL HARDWARE</u>.

6. INSTALL A NEMA 4X, NON–METALLIC JUNCTION BOX WITH AN ALUMINUM INTERIOR BACK PANEL FOR THE PROPER TERMINATION OF THE POWER WIRING AND LIGHTNING/SURGE PROTECTION WIRING FOR THE LIFT STATION. THE JUNCTION BOX SHALL BE SIZED PER N.E.C. TO PROPERLY ACCEPT THE NUMBER AND SIZES OF WIRING INSTALLED IN THE BOX. ALL TERMINAL BLOCKS INSTALLED IN THIS JUNCTION BOX SHALL HAVE A SUFFICIENT NUMBER AND SIZE OF TERMINATION POINTS FOR SINGLE POINT CONNECTION OF ALL CONDUCTORS. PERMANENTLY IDENTIFY EACH GROUP OF POWER TERMINAL BLOCKS TO SHOW THE USE OF THE BLOCKS. PERMANENTLY IDENTIFY THE CONDUCTORS WITH WIRE MARKERS EQUAL TO BRADY. INSTALL THE FOLLOWING ON THE INTERIOR BACK PANEL:

   A. PRESSURE PLATE DIN RAIL TERMINAL BLOCKS OR POWER TERMINAL BLOCKS FOR THE TERMINATION OF THE POWER WIRING, SURGE PROTECTOR WIRING, AND LIGHTING ARRESTOR WIRING.
   B. EQUIPMENT GROUND BAR.
   C. ISOLATED GROUND BAR FOR GROUNDING ELECTRODE CONDUCTOR, SURGE PROTECTOR, AND LIGHTNING ARRESTOR GROUND. NOTE: THIS ENTIRE SYSTEM MUST BE ISOLATED.
   D. MOUNT THE SURGE PROTECTOR AND THE LIGHTING ARRESTOR TO THE BOTTOM OF THE JUNCTION BOX.
   E. INSTALL 1/2" PVC FOR THE #6 AWG, INSULATED GROUNDING ELECTRODE CONDUCTOR (GEC). ATTACHMENT THE GEC TO THE GROUND ROD USING AN EXOTHERMIC WELD.
   F. SUPPLY A COMMERCIAL GRADE LIGHTNING PROTECTOR WITH NEUTRAL AND GROUND WIRES AND SUPPLY A SURGE CAPACITOR WITH NEUTRAL AND GROUND WIRES AS DETERMINED BY THE VOLTAGE RATING OF THE ELECTRICAL SERVICE TO THE LIFT STATION EQUIPMENT. IF THE POWER SUPPLY IS 120/240 VAC, SINGLE PHASE: INSTALL DELTA LIGHTNING ARRESTORS MODEL #LA 302G LIGHTNING PROTECTOR WITH NEUTRAL AND GROUND AND MODEL #CA 302RG SURGE CAPACITOR. IF THE POWER SUPPLY IS 3–PHASE INSTALL THE CORRESPONDING 3–PHASE, DELTA LIGHTNING ARRESTOR BRAND OR EQUAL LIGHTNING ARRESTOR AND SURGE CAPACITOR.

7. THE NEW DOUBLE–THROW, NON–FUSED DISCONNECT SWITCH SHALL MATCH THE RATING OF THE PUMPING SYSTEM AND SHALL BE SUPPLIED WITH A SOLID NEUTRAL BAR AND A SEPARATE GROUND BUSS. SUPPLY THIS SWITCH IN A NEMA 4X, STAINLESS STEEL ENCLOSURE. CONNECT THE NORMAL POWER FEED TO THE TOP OF THE SWITCH, THE GENERATOR RECEPTACLE FEED TO THE BOTTOM OF THE SWITCH, AND THE LOAD WIRING TO THE CENTER CONNECTIONS IN THE SWITCH.

8. THE NEW GENERATOR RECEPTACLE SHALL MATCH THE RATING OF THE PUMPING SYSTEM. THE RECEPTACLE SHALL BE A PIN AND SLEEVE STYLE RECEPTACLE OR TWIST–LOCK STYLE RECEPTACLE WITH A SEPARATE GROUND CONNECTION. PIN AND SLEEVE RECEPTACLES SHALL HAVE STYLE 2 CONNECTIONS PROVIDING FOR A SEPARATE GROUND WIRE PIN CONNECTION IN THE RECEPTACLE AND IN THE MATING PLUG. THE GENERATOR RECEPTACLE SHALL BE SUPPLIED IN A WEATHERPROOF, NON–METALLIC BOX WITH A WEATHERPROOF, NON–METALLIC COVER.

9. THE NEW GENERATOR RECEPTACLE SHALL MATCH THE MATING PLUG THAT IS INSTALLED ON TPWD'S EXISTING TRAILER MOUNTED GENERATOR. THE CONTRACTOR SHALL COORDINATE THAT THE LIFT STATION GENERATOR RECEPTACLE MATES WITH TPWD'S GENERATOR MATING PLUG.

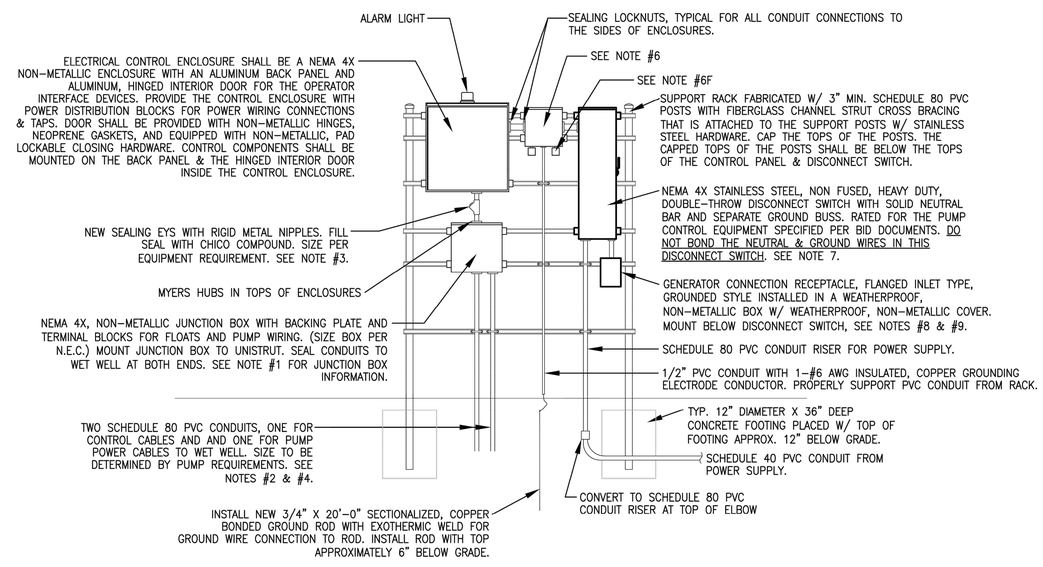

2 LIFT STATION CONTROL PANEL INSTALLATION DETAIL - COASTAL LOCATIONS

NOT TO SCALE

<u>NOTE</u>: INSTALL THE LIFT STATION CONTROL PANEL RACK SO THE FRONT OF THE ENCLOSURES FACE AWAY FROM THE OCEAN OR AWAY FROM THE DIRECT SEA BREEZE WIND.

LIFT STATION AND VALVE BOX ACCESS COVERS SHALL BE LOCKABLE .

THE CONTROL AND ELECTRICAL PANEL BOXES SHALL BE LOCKABLE.

TEXAS PARKS & WILDLIFE

STATE OF TEXAS
ROBERT A. HILL
93655
LICENSED PROFESSIONAL ENGINEER
4/23/2021

OMEGA ENGINEERS, INC.
16340 PARK TEN PLACE, Ste. #325
HOUSTON TEXAS, 77084
OMEGAENGINEERS.COM
TX PE Firm Reg. No. F-2147
P:281 647 9182 F:281 647 9184

MATHIS FISHERIES OFFICE
AT LAKE CORPUS CHRISTI, MATHIS, TEXAS
PROJECT NUMBER: 127144

DATE: 4/23/21
DESIGNED BY: RAH
DRAWN BY: RAH
REVIEWED BY:
REVISED:
REVISED:

SHEET TITLE
DETAILS

SHEET NUMBER
C.011

PERCENTAGE: BID ISSUE

Landscape Requirements:

1. Perform all work in accordance with all applicable laws, codes, and regulations required by authorities having jurisdiction over such work and provide all inspections and permits required by Federal, State, and local authorities in supply, transportation, and installation of materials.

2. The contractor shall be responsible for the verification of all underground utility lines (telephone, gas, water, electrical, cable, TV, etc.) and all overhead utility easements prior to start of any planting works.

3. All plant materials shall possess the following minimum qualities:
   a. Plants shall be nursery grown in accordance with good horticultural practices under climatic conditions similar to those of the project for at least twelve months.
   b. All plants shall be heavy, symmetrical, tightly knit, so trained or favored for development and appearance as to be superior in form, number of branches, compactness, and symmetry.
   c. Plants shall be sound, healthy and vigorous, well branched, and densely foliated when in leaf. They shall be free of disease, insects, pests, eggs, or larvae.
   d. All plants shall be true of species and variety and shall conform to measurements (caliper size, trunk heights, spread) as specified on the drawings.
   e. Container grown stock when specified shall have grown in the container in which delivered for at least six months, but not over two years. Samples must prove no rootbound conditions exist.
   f. Caliper measurements shall be taken at a point on the trunk six inches (6") above natural ground line for trees up to four inches (4") in caliper.
   g. All trees shall be staked by a minimum of two metal "T" stakes for single trunk trees and three stakes for all multi-trunk trees.
   h. Immediately before transportation to the site all plants, pots, and soil shall be inspected for Tawny crazy ants and Argentine ants and shall be determined to be free of these pests before transportation to the park.

4. Planting mix shall be thoroughly mixed in the following proportions:
   a. Prepared soil as backfill for shade and ornamental trees shall be: 5 part clay loam topsoil + 2 part compost + 1 part sharp sand + 4 Lbs. Commercial fertilizer per CY Or 10 Lbs. Organic fertilizer.
   b. Prepared soil as backfill for shrubs and groundcovers and seasonal colors shall be: 1 part enriched mulch + 1 part compost bark mulch + 1 part enriched topsoil + 1 part No. 1 Bank Sand + 3 Lbs. Time- released fertilizer, 14-14-14 per CY or 8 Lbs. Organic fertilizer.

5. Excavation work and Surface drainage works shall conform to the following requirements:
   a. Test drainage of plant beds and plant pits by filling with water twice in succession. Conditions permitting the retention of water for more than 24 hours shall be brought to the attention of the Owner.
   b. Work shall include the final responsibility for proper surface drainage of planted areas. Any obstructions on the site, or prior work done by another part, which precludes establishing proper drainage shall be brought to the attention of the Owner in writing.
   c. Excavate each tree hole 18" deep plus the depth of the tree container size (15 gal. Or 30 gal. Or 65 gal. Or 100 gal.).
   d. Excavate entire shrub bed to a depth of 8" plus the depth of the shrub container size (5 gal.) unless noted as being pit planted on landscape legend.
   e. Excavate entire groundcover bed to a depth of 6" plus the depth of the groundcover container size (4" pot or 1 gal.).

6. Additional work requirements on landscape areas:
   a. Prior to installation of any planting works (trees, shrubs,groundcover and grass works); apply "Round Up" in all planting areas to eradicate all weed growths on site.
   b. Use **"Shovel Edge"** to separate all plant beds from grass areas.
   c. Spread a minimum two inch layer of pine bark mulch overall shrub and groundcover bed areas.

7. Landscape maintenance work by the Landscape Contractor after final acceptance shall include the following:
   a. The maintenance period shall commence upon inspection and approval at Final Acceptance and shall be for a period of Sixty Days (60).
   b. The landscape contractor shall coordinate the watering program for all the landscape work with the Owner.
   c. Maintenance of new plantings shall consist of watering, cultivating, weeding, mulching, restaking, tightening and repair of guys; resetting plants for proper grades or upright position, and furnishing and application of pesticides/herbicides; sprays, and invigorants as are necessary to keep plantings free of insects and disease and in a thriving condition.

8. Warranty Periods, Plant Guarantees, and Replacements:
   a. Planting supplied shall be warranted to remain alive and healthy for a period of twelve months (12) after the date of Final Acceptance by Owner. Plants in an impaired, dead, or dying condition after initial acceptance or within 12 months shall be removed and replaced immediately to the satisfaction of the Owner.

Grass Hydromulching Work Requirements:

1. Grass works:
   a. Seed which has become wet, moldy and otherwise damaged in transit or in storage will not be acceptable.
   b. All grass seed shall be fresh, re-cleaned grass seed of the latest crop, mixed in the following proportions by weight and meeting the accepted standards of pure live seed content, purity and germination.
   c. Grass seed shall have the following minimum ratio:
      REFER TO GRASS REQUIREMENTS BY OWNER ON THIS SHEET:

2. Slurry Mix Component per Acre shall be Wood cellulose fiber mulch = 2,000 pounds + Grass Seed as specified + fertilizer (13-13-13) 800 pounds.
3. Hydromulched seeding on Prepared finished grades:
   a. Install and spread out a minimum of one inch layer of topsoil over all areas to be hydromulched.
   b. Bed preparation: Immediately after the finished grade has been approved, begin hydroseeding operation to reduce excessive weed growth and erosion.
   c. Apply seed, fertilizer and mulch by spraying them on the previously prepared seedbeds in the form of an aqueous mixture and by using the methods and equipment described herein.
   d. Particular care shall be exercised by the contractor to insure that the application is made uniformly and at the prescribed rate and to guard against miss and overlapped areas.
   e. Where slope of areas to be grassed exceed a 3:1 H:V; an erosion control fabric shall be installed prior to hyromulching process. Erosion control blanket shall be equal to the Wood Fiber Erosion Control Blanket as supplied by the Native American Seed Company or approved equal. Erosion control blanket shall not contain plastic netting.
4. Maintenance:
   a. Maintenance shall consist of weeding, fertilizing, insect control, watering, replanting, mowing, maintaining of existing grades and repair of any erosion damages.
   b. Guarantee growth and coverage of hydromulch planting shall be a minimum on ninety five percent 95% of the area planted will be covered with specified planting after sixty days with no bare spots visible.
   c. Watering: Coordinate with the Owner to properly operate irrigation system to assure a regular, deep watering program.
5. Inspection and Final Acceptance:
   Final acceptance of lawn establishment shall mean that hydroseed areas are Ninety Five percent 95% uniform coverage of grass in excess of one inch height. No bare spots will be acceptable.

Grass Work Requirements:

1.1. Seed all areas disturbed by construction and areas indicated on the seeding plan. Native seed mix should include the following 10 species of native grasses, forbs, and legumes at approximately the following mix. If a particular seed listed is unavailable, respondents may propose an alternate seed that is equivalent. The mix should be similar in species composition to Lake Corpus Christi State Park's original prairie. No species shall constitute more than 20% of the mix. Plantings between Oct. 1 - March 15 shall also include Cereal Rye Grain (Secale cereale) at rate of 25 PLS#/acre. Seed mix as supplied by the Native American Seed Company, www.seedsource.com, phone: 325-446-3600, or approved equal.

Item #	Seed Name	Scientific Name	% Comp. of Seed Mix
1	Little Bluestem	*Schizachyrium scoparium*	16
2	Indiangrass	*Sorghastrum nutans*	12
3	Plains Bristlegrass	*Setaria vulpiseta*	10
4	Red Lovegrass	*Eragrostis secundiflora*	10
5	Sideoats Grama	*Bouteloua curtipendula*	8
6	Virginia Wildrye	*Elymus virginicus*	8
7	Cutleaf Daisy	*Engelmannia peristenia*	10
8	Illinois Bundleflower	*Desmanthus illinoensis*	10
9	Indian Blanket	*Gaillardia pulchella*	8
10	Partridge Pea	*Chamaecrista fasciculata*	8
			100

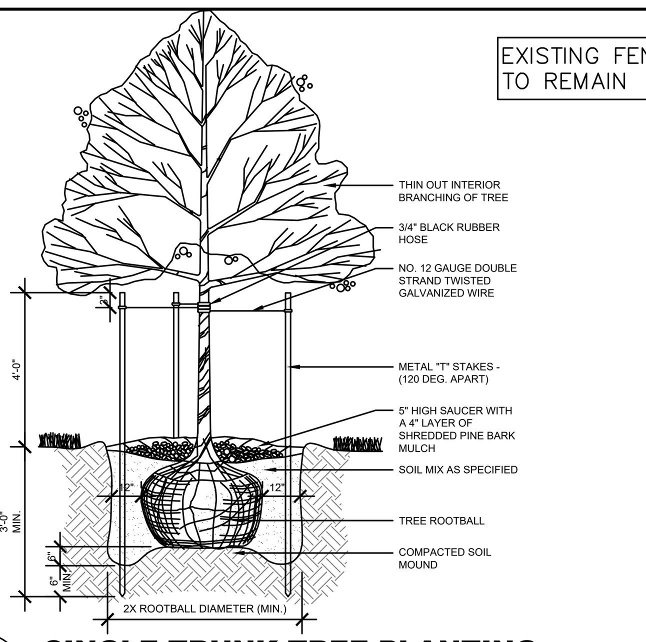

A L1.1 **SINGLE-TRUNK TREE PLANTING**
SCALE: NOT TO SCALE

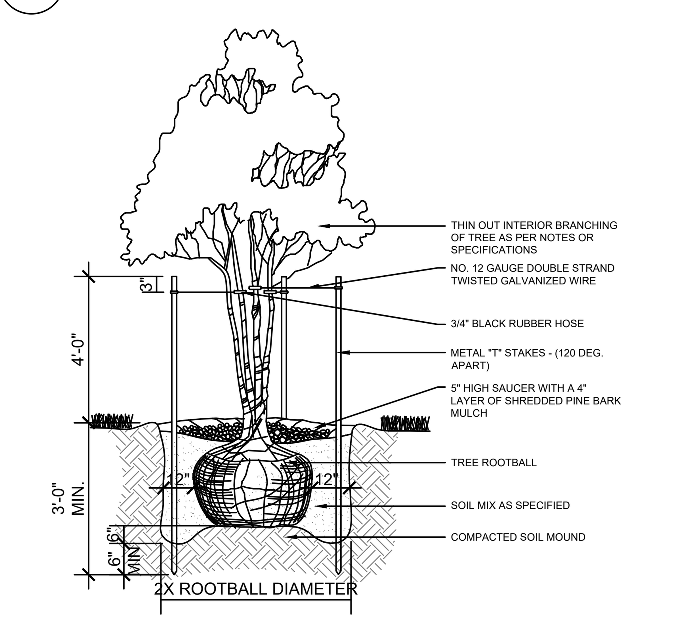

B L1.1 **MULTI -TRUNK TREE PLANTING**
SCALE: NOT TO SCALE

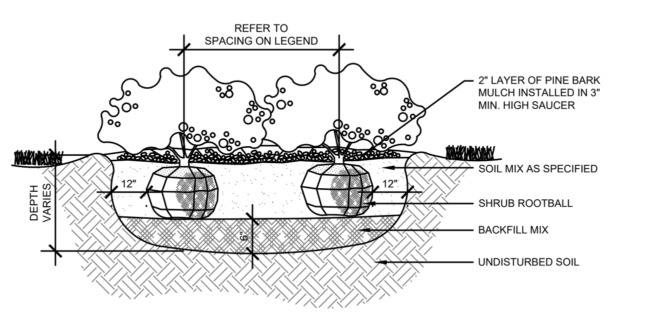

C L1.1 **SHRUB PLANTING**
SCALE: NOT TO SCALE

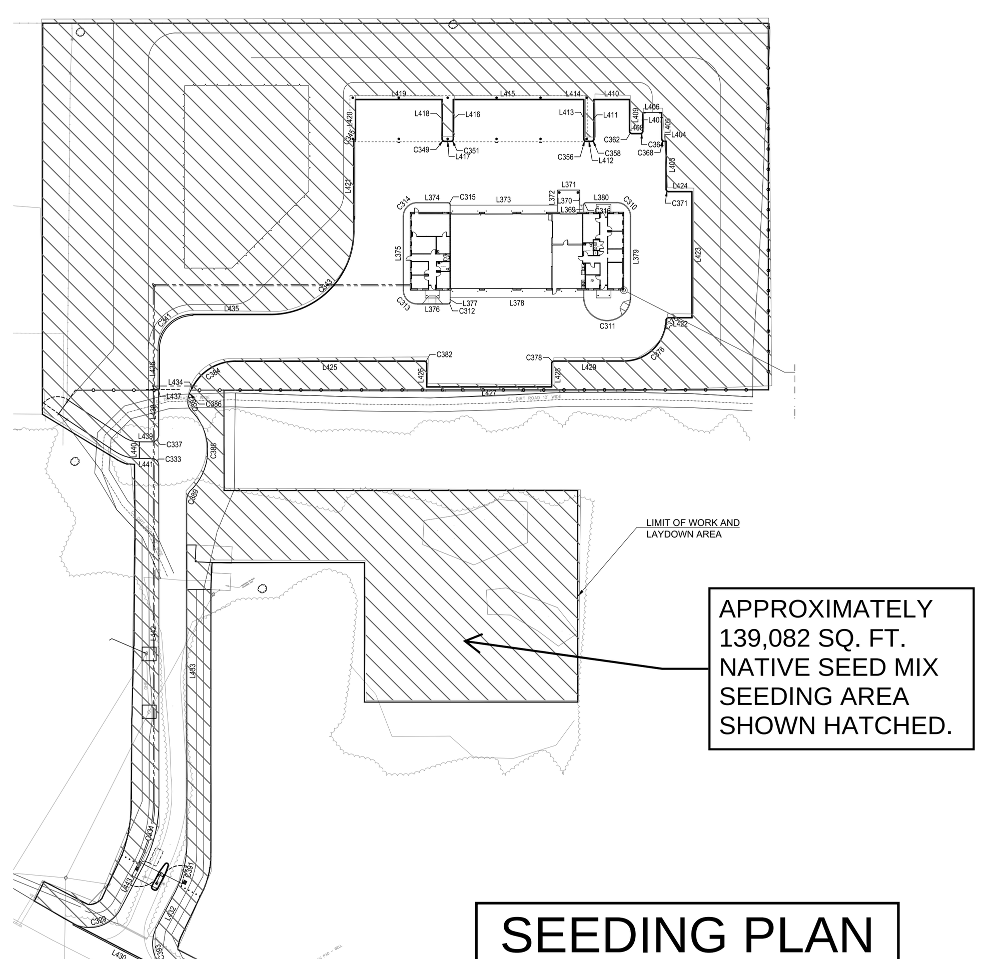

SEEDING PLAN

1.2. Bidders must specify the origin location of each seed and the mix must consist of seed mostly developed from or harvested from areas geographically close to Lake Corpus Christi State Park. Preference will be given to those that can provide locally-adapted seed.

1.3. A minimum seeding rate of 20 bulk lbs/acre should be used.

1.4. Early successional native plants that will establish quickly and provide quick cover should comprise 20-50% of the composition of seed mix.

1.5. Forbs and legumes should comprise 20-50% of the composition of seed mix.

1.6. A cover crop of browntop millet at 7 lbs/per acre should be included with the native seed mix to help ensure quick coverage and suppress non-native grass emergence.

1.7. Seed should be cleaned to run through a seed drill, tested for species composition and viability and tagged by supplier according to Texas State Seed Law, and stored by supplier in climate-controlled warehouse until planting is complete.

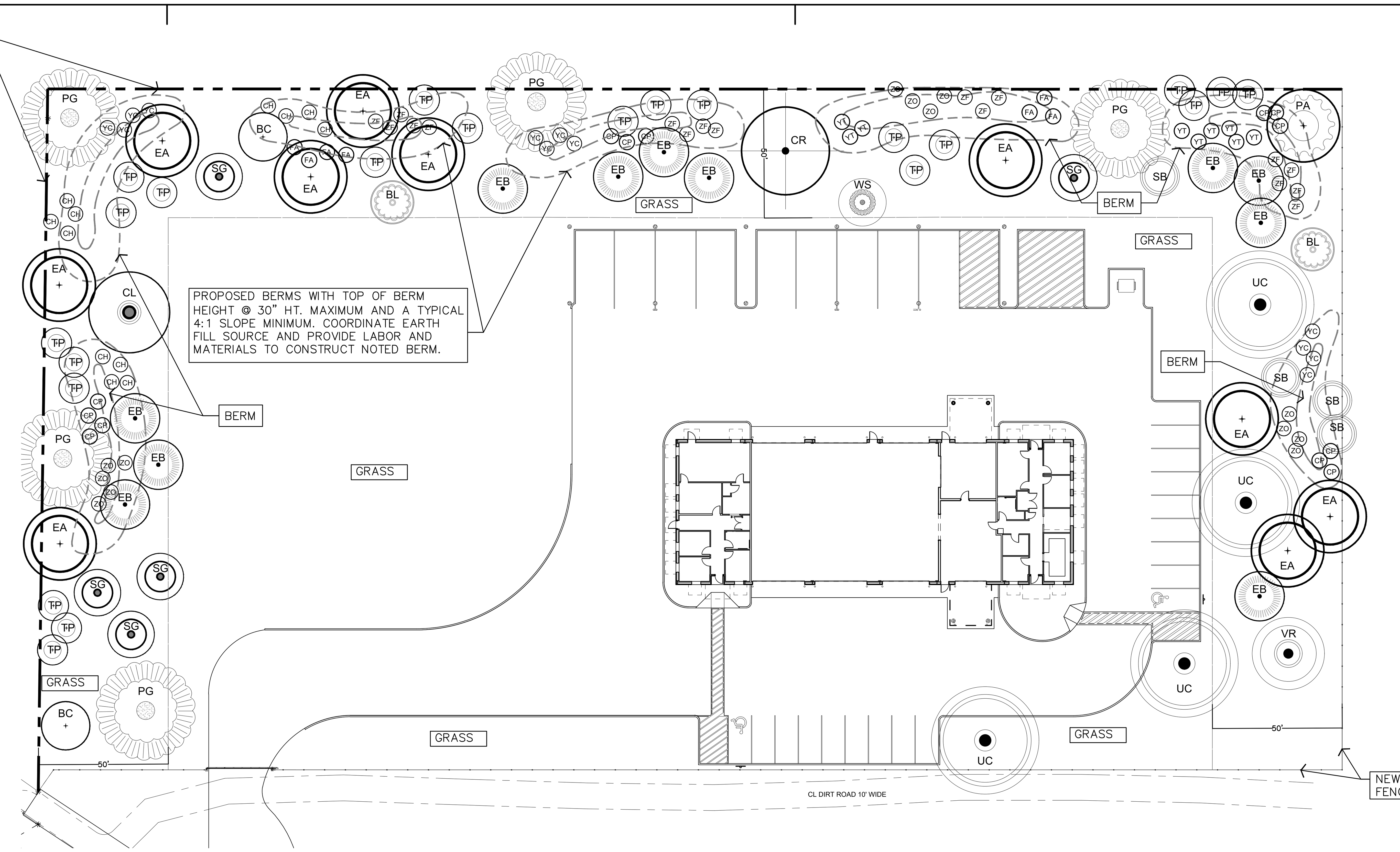

Mathis Fishery Landscape Legend:

Symbolic Name	Quantities (Verify)	Botanical Name	Common Name	Size and Plant Requirements
		Trees:		
PG	5	Prosopis Grandulosa	Honey Mesquite	2” cal. 30 gal. container; 9’ to 10’ ht.
TP	22	Dispyros Texana	Texas Persimmons	1-1/2" cal. 15 gal. container; 5’ to 6’ ht.
SG	5	Senegalia Greggii	Acacia Gregii	1-1/2" cal. 15 gal. container; 5’ to 6’ ht.
SB	4	Sengalia Berlandieri	Acacia Berlandieri	1-1/2” cal. 15 gal. container 5’ to 6’ ht.
PA	1	Parkinsonia Aculeata	Retama	2” cal. 30 gal. container; 9’ to 10’ ht.
BC	2	Bumelia Celastrina	Coma del Sur	1-1/2” cal. 15 gal. container 5’ to 6’ ht.
BL	2	Bumelia Lanuginosa	Gum Bumelia	1-1/2” cal. 15 gal. container 5’ to 6’ ht.
UC	4	Ulmus Crassifolia	Cedar Elm	2” cal. 30 gal. container; 9’ to 10’ ht.
EB	11	Ebenopsis Ebano	Texas Ebony	1-1/2” cal. 15 gal. container 5’ to 6’ ht.
VR	1	Vachellia Rigidula	Blackbush	1-1/2” cal. 15 gal. container 5’ to 6’ ht.
EA	10	Eehretia Anacua	Anaqua	1-1/2” cal. 15 gal. container 5’ to 6’ ht.
CR	1	Celtis Reticulata	Netleaf hackberry	1-1/2” cal. 15 gal. container 5’ to 6’ ht.
CL	1	Celtis Laevigata	Sugar Hackberry	1-1/2” cal. 15 gal. container 5’ to 6’ ht.
WS	1	Sapindus Saponaria	Western Soapberry	1-1/2” cal. 15 gal. container 5’ to 6’ ht.
SHRUBS:				
CP	13	Celtis Pallida	Spiny Hackberry	5 gal. planted at 36” o.c. in groupings as shown.
ZF	17	Zanthoxylum Fagara	Lime Pricklyash	5 gal. planted at 36” o.c. in groupings as shown.
CH	12	Condalia Hookeri	Brasil	5 gal. planted at 36” o.c. in groupings as shown.
FA	7	Forestiera Angustifolia	Elbowbush	5 gal. planted at 36” o.c. in groupings as shown.
YC	12	Yucca Constricta	Narrowleaf Yucca	5 gal. planted at 36” o.c. in groupings as shown.
YT	9	Yucca Treculeana	Trecul Yucca	5 gal. planted at 36” o.c. in groupings as shown.
ZO	13	Ziziphus Obtusifolia	Lotebush	5 gal. planted at 36” o.c. in groupings as shown.
Grass	~139,082 SQ. FT.	REFER TO GRASS WORK REQUIREMENTS		

NOTE:
Potential habitat at the site, on sandy loam soil is Cane Bluestem (grass) with Mesquite (tree) . Adjacent habitat is thickly vegetated with Mesquite/ Spiny/Hackberry/ Lime Prickly ash/ Brasil/ Texas Persimon Woodland.

NOTE:
Landscape plants shall be as supplied by Heeps Nursery, 1714 Palm Drive, Harlingen, TX 78552 or approved equal. Contact Mike Heep at phone: 956-57-6834, email: heep0311@yahoo.com. Plants unavailable during planting work may only be substituted with other species from the plant list with written approval from Landscape Architect.

Owner's Responsibility For Maintenance
Client acknowledges and agrees that proper Project maintenance is required after the Project is complete. A lack of or improper maintenance in areas such as, but not limited to, operation and maintenance of automatic irrigation system, all site drainage and all planting materials maintenance may result in damage to property or persons. Client further acknowledges that he is solely responsible for the results of any lack of or improper maintenance.

Landscape Contractor's Responsibilities:
All drainage (surface and subsurface) of all landscape areas within the project limits shall be the responsibility of the installing landscape contractor and landscape maintenance company. All grading of areas along all building areas must absolutely have positive slope away from building. In no case shall any plant bed be constructed along edge of building that will impede water flow away from building. If planting beds are located at edges of building, landscape contractor shall make sure that these areas drain properly (surface and subsurface-wise). Contractor shall install moisture barrier along building as necessary to keep water from penetrating underneath building slab.

"REFER TO FINISHED GRADES SHOWN ON PROJECT CIVIL GRADING PLAN. IT WILL REPRESENT FINAL ELEVATIONS. CARE SHOULD BE TAKEN BY THE LANDSCAPE CONTRACTOR NOT TO INCREASE THESE FINISHED GRADES WITH LANDSCAPING OR OTHER ALTERATIONS. THE THICKNESS OF SOD, GRASS AND LANDSCAPING MATERIALS SHOULD BE DEDUCTED FROM THE FINISHED GRADE ELEVATIONS IN THESE CIVIL GRADING PLANS IN ORDER TO DETERMINE THE GROUND ELEVATIONS DURING CONSTRUCTION."

1 L1.1 **LANDSCAPE PLAN**
SCALE: 1" = 30'-0"

04/23/21
Wong & Associates, Inc.
10000 RICHMOND
SUITE 100
HOUSTON, TX 77042
713-629-6100

MATHIS FISHERIES OFFICE
AT LAKE CORPUS CHRISTI, MATHIS, TEXAS
PROJECT NUMBER: 127144

DATE: 04/23/21
DESIGNED BY: EW
DRAWN BY: EW/SR
REVIEWED BY: EW

SHEET TITLE
LANDSCAPE PLAN

SHEET NUMBER
L1.1

Irrigation General Notes:

1. ALL materials and equipment shall conform to all applicable State of Texas, City and County codes.
2. The irrigation contractor shall be responsible for securing all permits prior to actual work on site.
3. The intent of the 100% coverage of all landscape areas.
4. Prior to commencement of work, the irrigation contractor shall contact the Owner to coordinate all required inspections.
5. Extreme care shall be exercised in excavating and working near existing utility easements. The irrigation contractor shall be responsible for the verification of all utility locations (telephone, TV, gas electrical, water, cable, etc.). The irrigation contractor shall be responsible for all damages inflicted on any and all utility lines.
6. The Irrigation contractor shall at all times protect his work from damage and theft and replace all damaged or stolen parts at his expense until receipt of the Certificate of Substantial Completion from the Owner.
   The Irrigation contractor shall flush and adjust the system for optimum performance. This shall include regulating the pressure at each valve to obtain the optimum operating pressure for each system.
7. Use glue joints in mainline passing through sleeves under pavement. PVC sleeves shall be Schedule 40 and shall extend 24" out of the nearest existing pavement areas for easy location. The irrigation contractor shall be responsible for coordinate all sleeve locations on the project site with the Owner and/or general contractor.
8. The irrigation contractor shall also comply to these additional special requirements to the irrigation system shall include the following.
   a. All mainlines shall have a minimum of 18" of cover **(Sch. 40 PVC Pipe.)**.
   b. All lateral and sub-main pipe to have a minimum of 12" of cover **(Sch. 40 PVC Pipe.)**.
   c. No rocks, boulders or other extraneous materials shall be used for backfilling of trenches.
   d. All pipes to be installed as per manufacturer's specifications.
   e. All threaded joints to be coated with Teflon tape or Liquid Teflon.
   f. All lines to be thouroughly flushed before installation of any sprinkler heads.
   g. Sprinkler and related equipments shall be installed as per manufacturer's specification.
   h. No electrical connections shall be made in the field except at a valve control box or another valve box specifically for connections.
   i. All 24 volt wire shall be No. 12UF/UL for common wire and No. 14 UF/UL for control wires, direct burial shall be solid copper.
   j. The irrigation contractor shall be responsible for proper coverage of areas to be watered; i.e. adjust heads with insufficient coverage due to blockage by existing or proposed site features or sizing down sprinkler heads to avoid excessive overthrow.
   k. The irrigation contractor shall refer to landscape planting plan to keep sprinkler equipments and accessory materials from interfering with proper planting; i.e. Verify rootball size for planting; configuration of shrub/groundcover beds, etc.
   l. The irrigation contractor shall provide expansion coils at each wire connection in valve box (wrap around 3/4" pipe 12 times).
   m. The irrigation contractor shall utilize appropriate automatic drain device where low head drainage may occur.
   n. All sprinkler heads shall be mounted on swing joints unless otherwise noted.
   o. The irrigation contractor shall install a separate common for each controller.
   p. 24 Volt wire shall be color coded: Common shall be white and Control red.
   q. The irrigation contractor shall install manufacturer's recommended grounding equipment for power supply and valve output with (2) 5/8" copper clad ground rods.
   r. The irrigation contractor shall install manufacturer's recommendation on fault ground and lightning protection.
   s. The irrigation contractor shall furnish the owner with the following : 2 wrenches for disassembling and adjusting each type of sprinkler heads and valves + 2 keys for the automatic controller +2 quick coupler keys with matching hose swivels.
   t. The irrigation contractor shall add extension risers to pop up sprinklers when needed for proper coverage. Coordinate with landscape contractor as to where risers for sprinkler heads are required.
   u. The irrigation contractor shall install sprinkler equipments 12" from all buildings foundations and install sprinklers 4" from any curbs or walkways.
   v. The irrigation backflow prevention device shall be installed within areas of proposed shrub plantings. The purpose of this is to keep the device screened from view.
9. The entire irrigation system (labor and materials) shall be guaranteed and warranted for a period of one year. The warranty period shall commenced upon final acceptance by Owner of all landscape and irrigation works.
10. The irrigation contractor for the project must be licensed to do business within the State of Texas , as required by TCEQ."
11. This irrigation plan is diagrammatic only. Irrigation contractor shall provide final irrigation design layout plan complete with licensed irrigator's seal and signature. All applicable design calculations shall be shown on this irrigation plan to comply with all TCEQ requirements.

Irrigation Legend:

Sym	Sym	Irrigation Equipment and Manufacturer	Sprinkler Specification	GPM
		Hunter I-20 Rotary Sprinkler		
		I-20-ADS 4"-1.5 nozzle Part Circle on 24" sch. 40 PVC riser or equal	30'-0" radius	2.00
		Rainbird PEB series Electric Remote Control Valves with sizes as noted plan.		
		One (1) 1 1/2" water meter Supplied and installed by irrigation contractor for the irrigation system. Water meter to be installed as per city and county codes.	Verify point of connection.	
		One (1) 1 1/2" FEBCO RPZ & 1 1/2" ISOLATION VALVE to be installed as per city and county code by irrigation contractor. Install **BPDI Guardshack Enclosure GS-3.3** to protect backflow devices. Verify location on site.		
		Rainbird 33 DRC quick coupling valve (valves to be installed below grade inside valve box)	Total **(7)** field located on site.	
		One (1) Rainbird ESP 8 LX Irrigation controllers. Verify location and coordinate electrical requirements for controller with General contractor and / or owner. Install **Rainbird Rain Sensors** within close proximity of controller location. Verify location with Owner.		
		Pressure Line shall be **1 1/2"** sch. 40 PVC pipe. Install "Thrust Blocks" as required. Install appropriate Gate Valves where noted.		
		6" Sch. 80 PVC irrigation sleeves unless noted as 4" on plan. Verify location of all sleeves on project site.		
		1/2" Sch. 40 PVC non pressure line. 3/4" Sch. 40 PVC non pressure line. 1" Sch. 40 PVC non pressure line. 1-1/2" Sch. 40 PVC non pressure line.		
		Sequence of Irrigation Valve Size of Irrigation Valve		

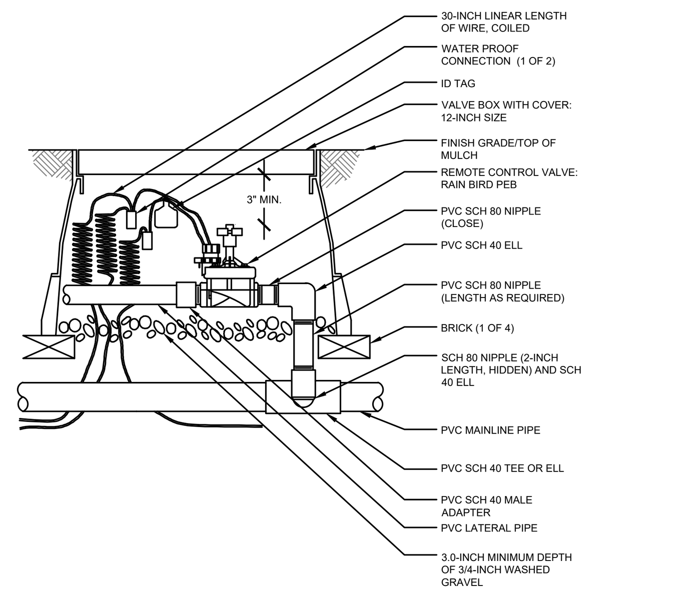

A L2.1 **REMOTE CONTROL VALVE**
SCALE: NOT TO SCALE

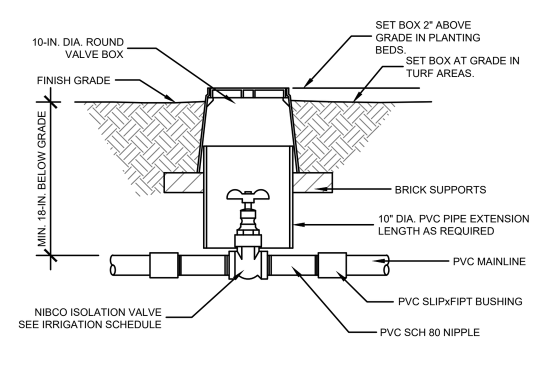

B L2.1 **ISOLATION/SHUT-OFF VALVE**
SCALE: NOT TO SCALE

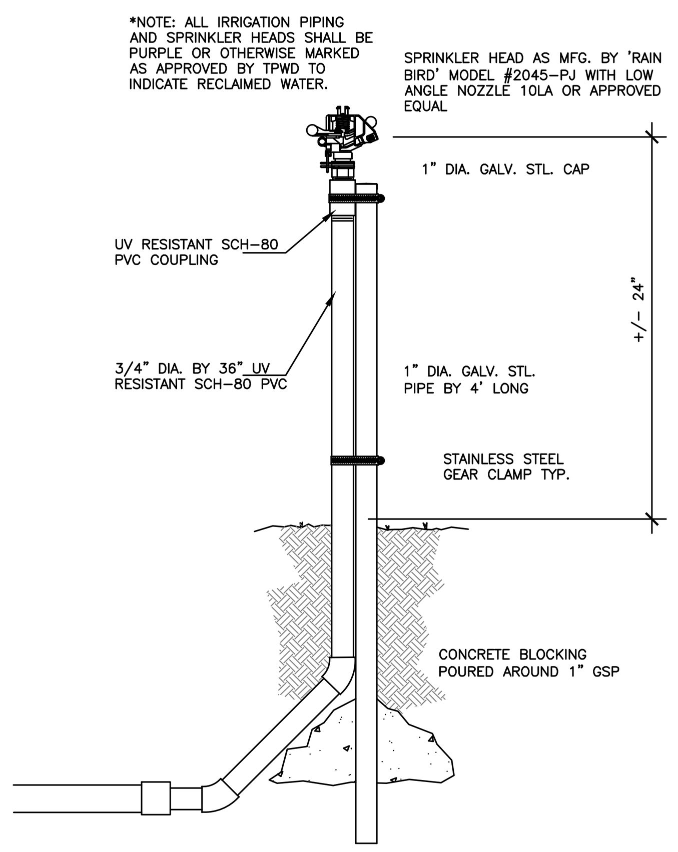

C L2.1 **DETAIL - SPRINKLER HEAD**
SCALE: NOT TO SCALE

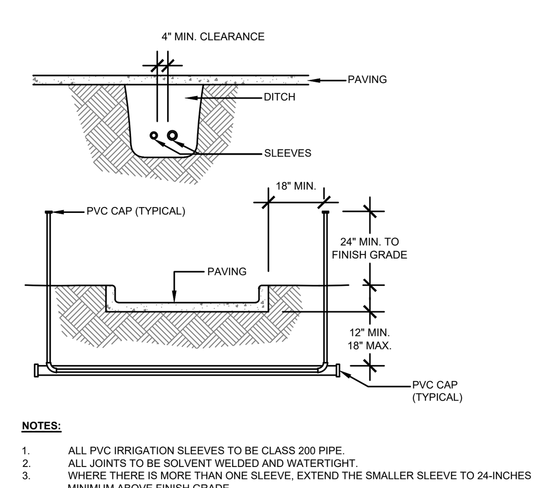

D L2.1 **SLEEVING**
SCALE: NOT TO SCALE

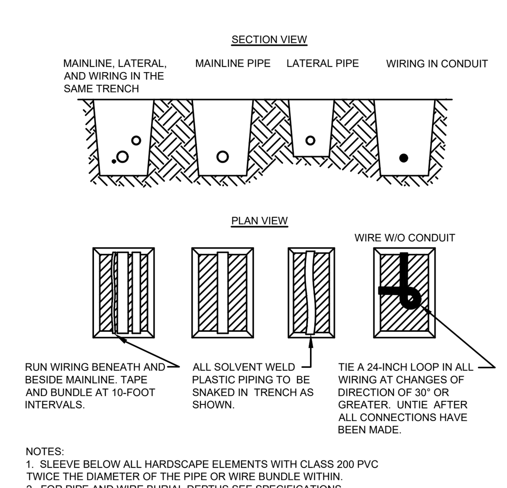

E L2.1 **TRENCH DETAIL**
SCALE: NOT TO SCALE

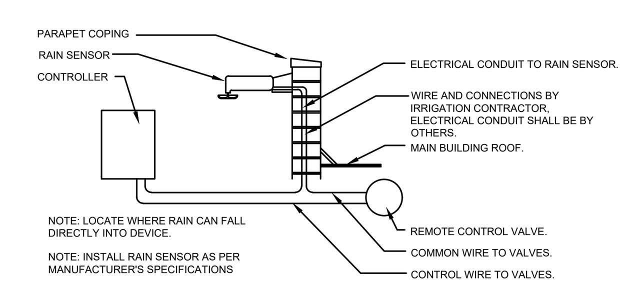

F L2.1 **RAIN SENSOR INSTALLATION DETAIL**
SCALE: NOT TO SCALE

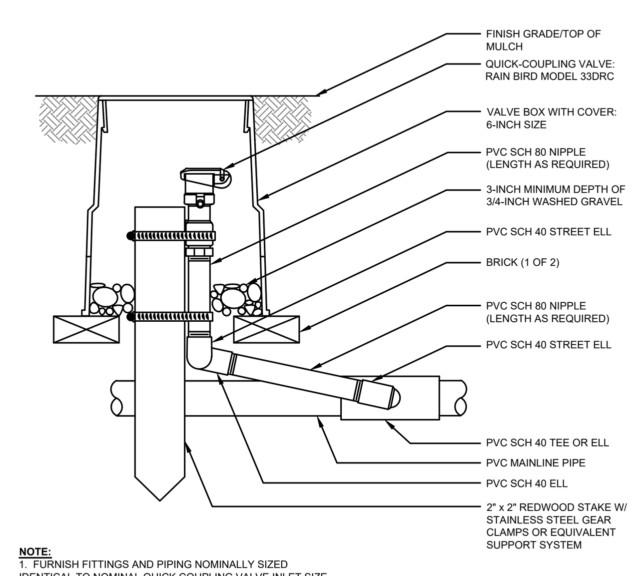

G L2.1 **QUICK COUPLING VALVE**
SCALE: NOT TO SCALE

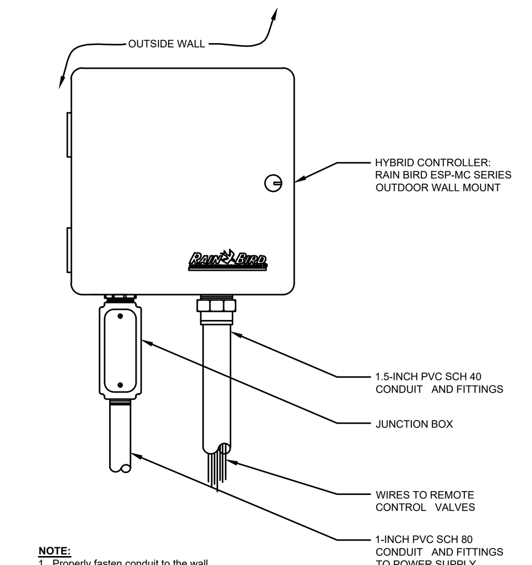

H L2.1 **IRRIGATION CONTROLLER**
SCALE: NOT TO SCALE

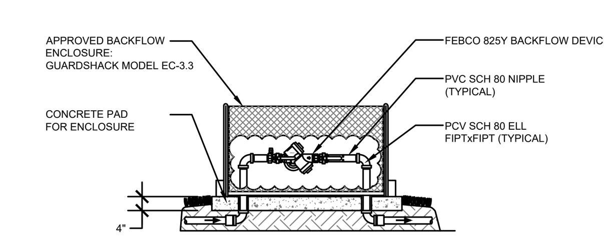

I L2.1 **FEBCO 825Y RPZ BACKFLOW DEVICE**
SCALE: NOT TO SCALE

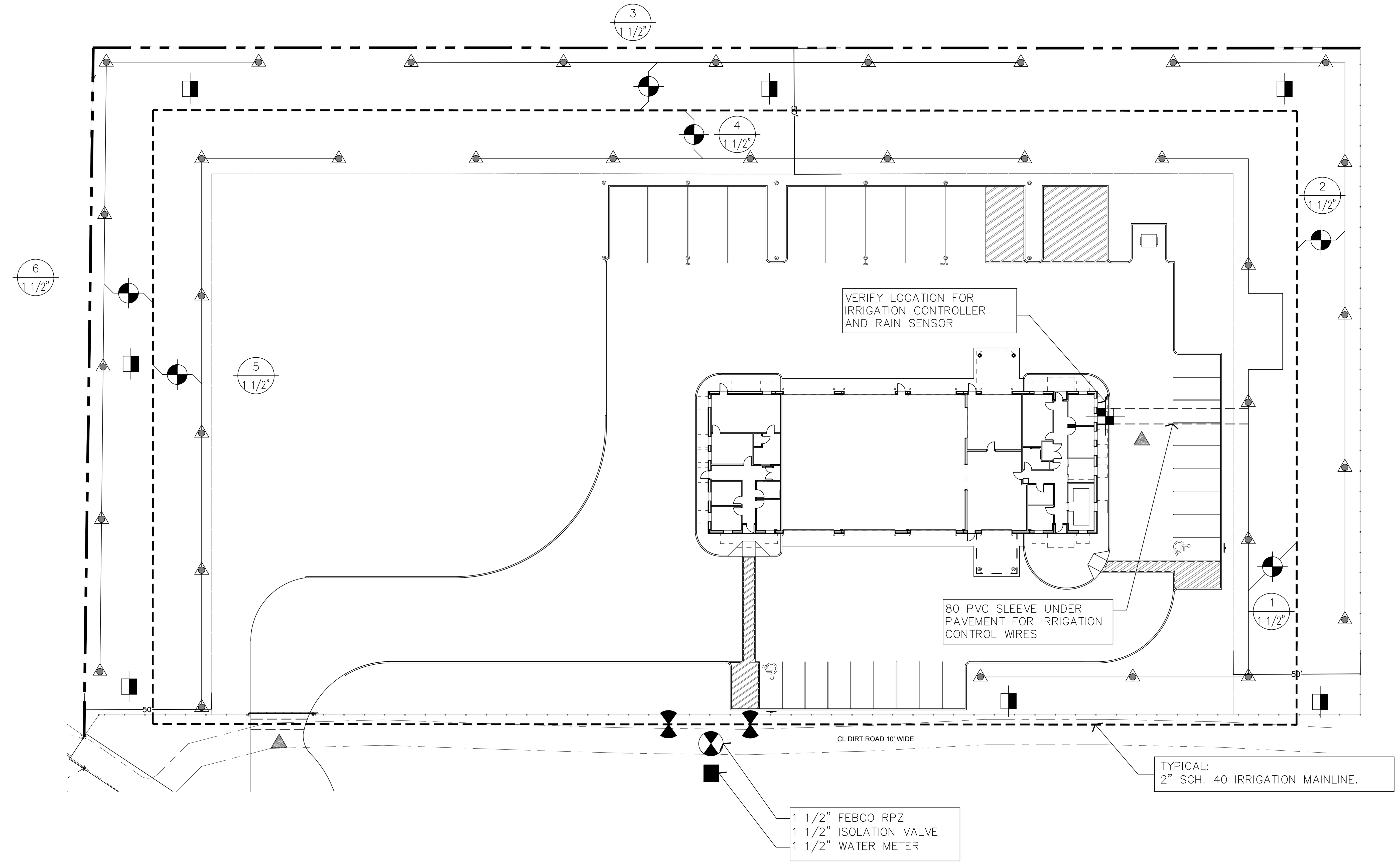

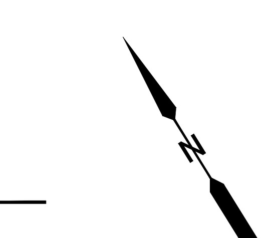

1 L2.1 **IRRIGATION PLAN**
SCALE: 1" = 30'-0"

DESIGN DISCLAIMER:

This irrigation drawing is a preliminary layout. It is a diagrammatic representation for purpose of providing a basic depiction of the scope of coverage, initial valve zoning, with head type and placement. The Irrigation drawing does not provide necessary zone flow, hydraulic calculations to determine Design Pressure. These are defined in Texas Administrative Code*§§344.61 Minimum Standards for Design of the Irrigation Plan* , and required by the T.C.E.Q for a complete Irrigation Plan and for Permit and Construction. It will be the responsibility of the installing licensed irrigator or irrigator-in-charge, to use information provided on this Preliminary Irrigation drawing, to provide a final Irrigation Plan meeting all standards as required by T.C.E.Q, Signed and Sealed.

Wong & Associates, Inc. shall not be responsible and accepts no liability for design failure, inaccurate head layout, incorrect hydro-zoning, pipe sizing, zone flow or hydraulic calculations, irrigation equipment, or aspects of the preliminary design drawing not in compliance with local irrigation regulations. The irrigation contractor shall be ultimately responsible for the final design, installation and proper operation of the irrigation system.

Disclaimer

Wong & Associates, Inc. shall not be responsible for the operation and/or maintenance of this irrigation system, once the date of final acceptance by the owner is established. All grades and elevations on the project shall be set by the project civil engineer. The Owner shall be responsible for the monitoring and the maintaining of the irrigation system. Monthly moisture sensor tests of all sprinkler zones around all building pads and on entire property, shall be performed by the Owner to ensure that no over-watering and/or any irrigation system leaks are present. The irrigation contractor shall be responsible for providing all guarantee and warranties for the irrigation system. The irrigation contractor shall be ultimately responsible for the installation and proper operation of the irrigation system.

STATE OF TEXAS
CRAIG S. VARS
LICENSED IRRIGATOR
04/23/21

Wong & Associates, Inc.
P.O. Box 2028 Bellaire, Texas 77402-2028
Tel. 713-777-9198 Cell : 713-557-9298
Member: American Society of Landscape Architects

10000 RICHMOND
SUITE 100
HOUSTON, TX 77042
713-629-6100

MATHIS FISHERIES OFFICE
AT LAKE CORPUS CHRISTI, MATHIS, TEXAS
PROJECT NUMBER: 127144

DATE: 04/23/21
DESIGNED BY: EW
DRAWN BY: EW/SR
REVIEWED BY: EW

SHEET TITLE
IRRIGATION PLAN

SHEET NUMBER
L2.1

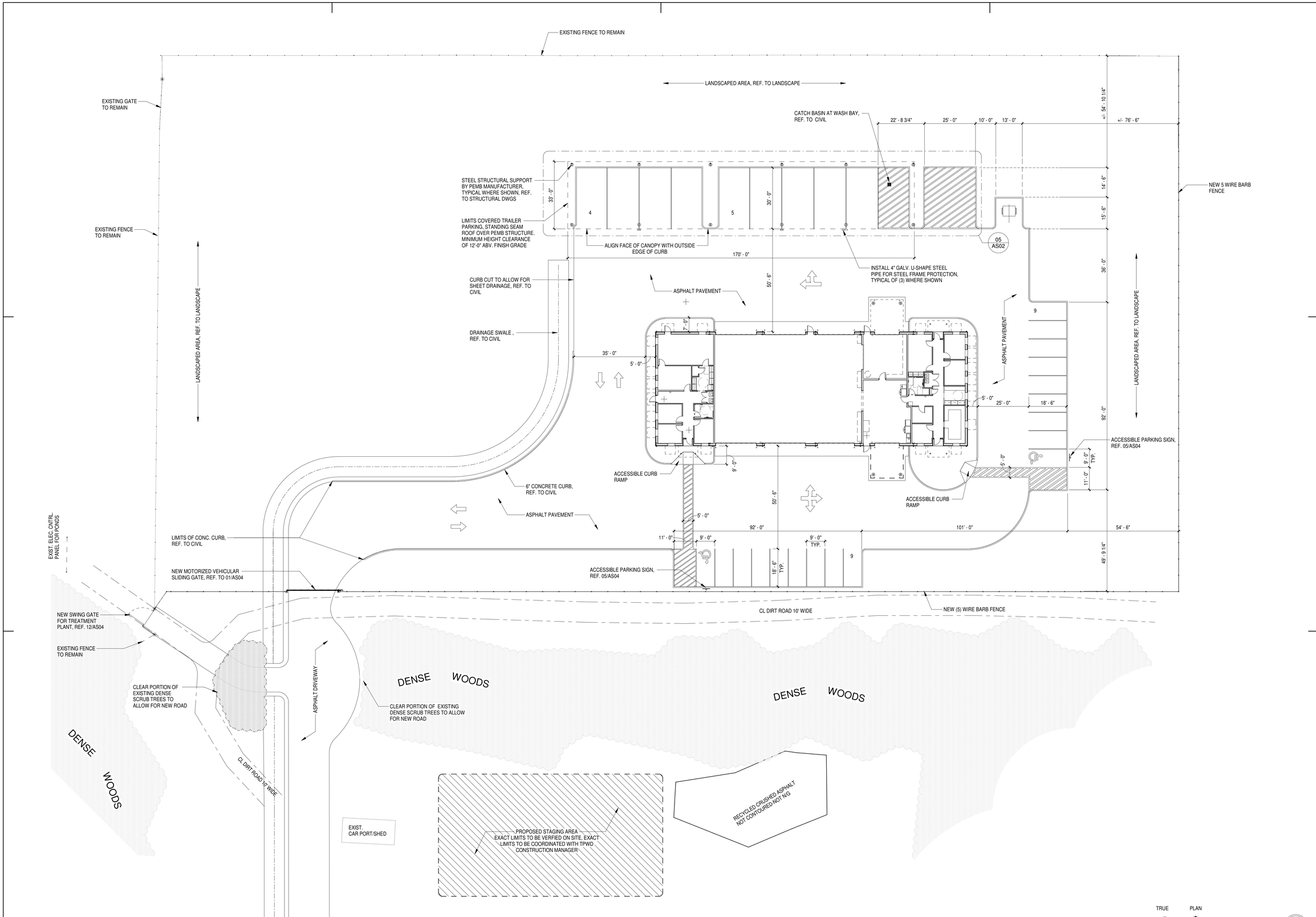

SITE PLAN
1" = 20'-0"
01

TEXAS PARKS & WILDLIFE

REGISTERED ARCHITECT JOE W. MAHLER 09601 STATE OF TEXAS
04/23/2021

PDG ARCHITECTS
10000 RICHMOND
SUITE 100
HOUSTON, TX 77042
713-629-6100

MATHIS FISHERIES OFFICE
AT LAKE CORPUS CHRISTI, MATHIS, TEXAS
PROJECT NUMBER: 127144

DATE: 04-23-2021
DESIGNED BY:
DRAWN BY:
REVIEWED BY:
REVISED:
REVISED:

SHEET TITLE
SITE DEVELOPMENT PLAN

SHEET NUMBER
AS01

PERCENTAGE: BID SET

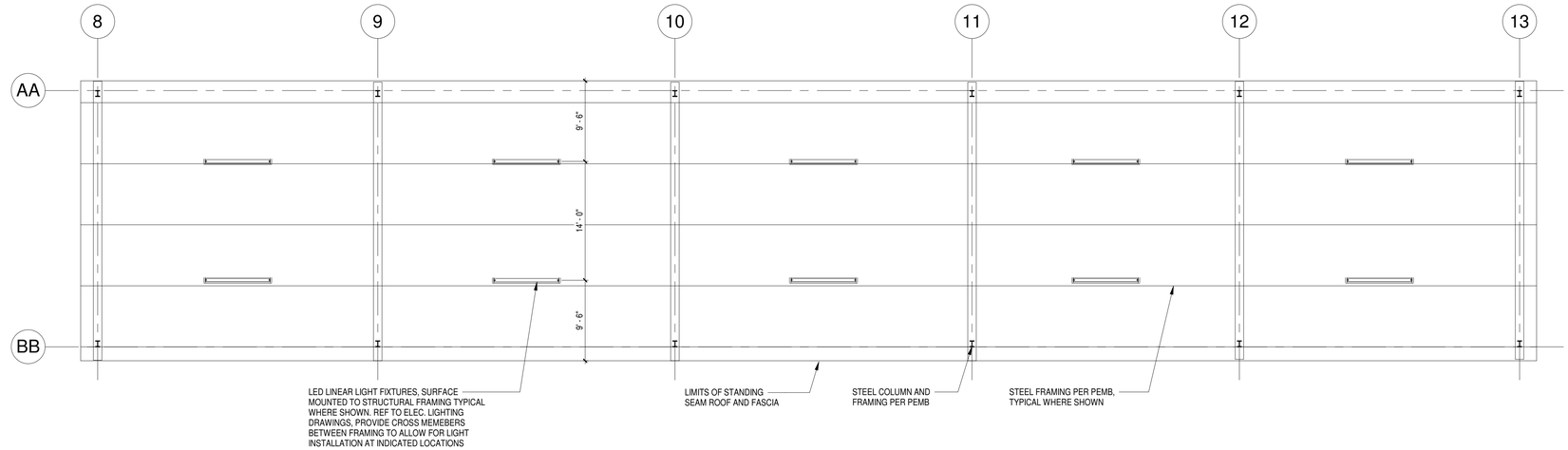

TRAILER PARKING RCP
1/8" = 1'-0"
09

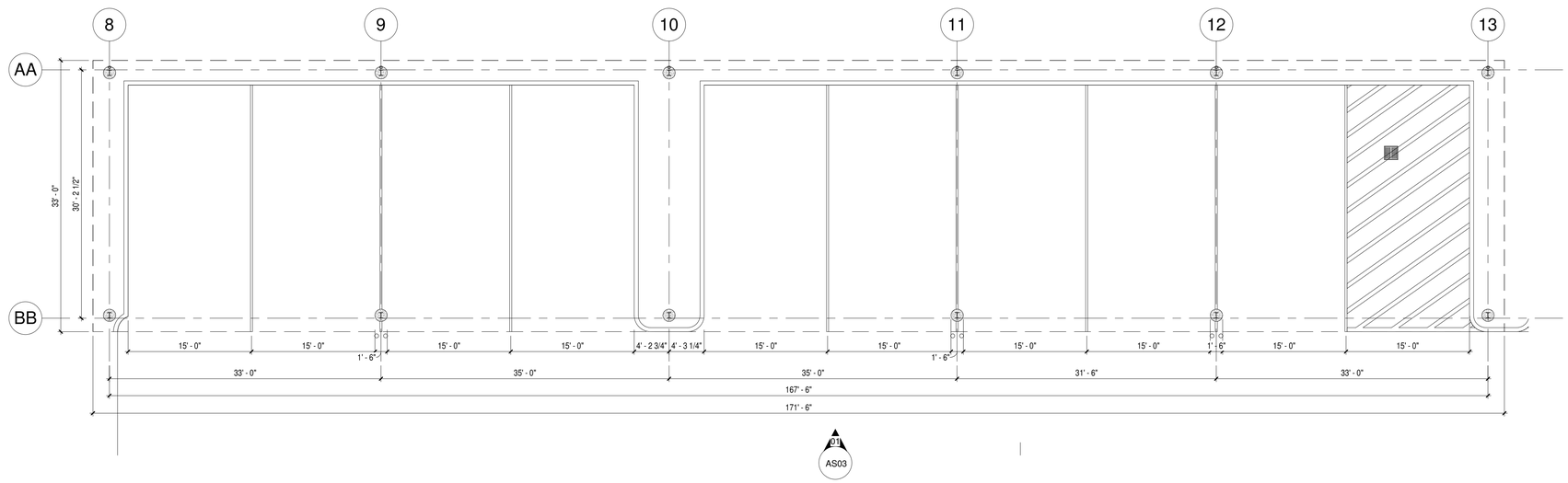

TRAILER PARKING CANOPY PLAN
1/8" = 1'-0"
05

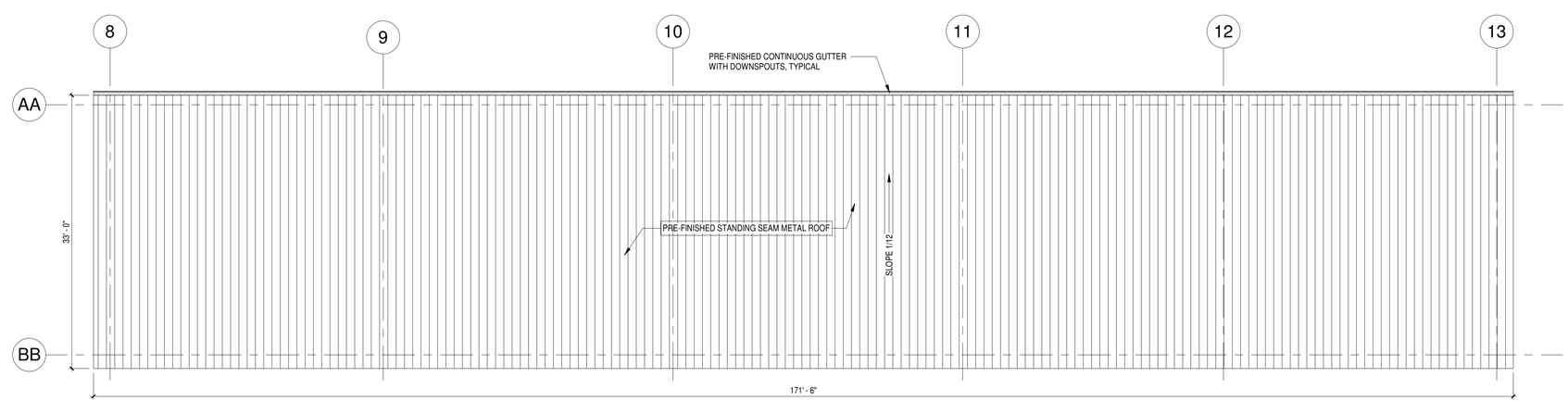

TRAILER PARKING CANOPY ROOF PLAN
1/8" = 1'-0"
01

TEXAS PARKS & WILDLIFE

REGISTERED ARCHITECT
JOE W. MAHLER
09601
STATE OF TEXAS
04/23/2021

PDG ARCHITECTS

10000 RICHMOND
SUITE 100
HOUSTON, TX 77042
713-629-6100

MATHIS FISHERIES OFFICE
AT LAKE CORPUS CHRISTI, MATHIS, TEXAS
PROJECT NUMBER: 127144

DATE: 04-23-2021
DESIGNED BY:
DRAWN BY:
REVIEWED BY:
REVISED:
REVISED:

SHEET TITLE
TRAILER COVERED PARKING PLANS

SHEET NUMBER
AS02

PERCENTAGE: BID SET

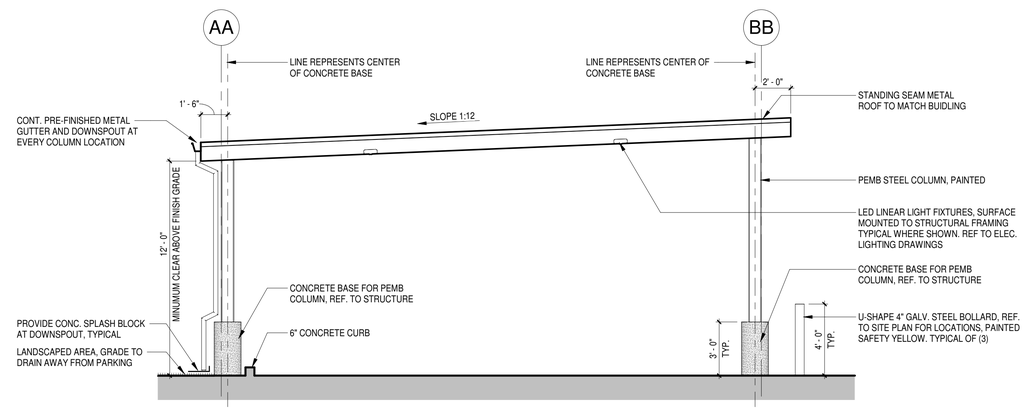

COVERED TRAILER PARKING SECTION 05
1/4" = 1'-0"

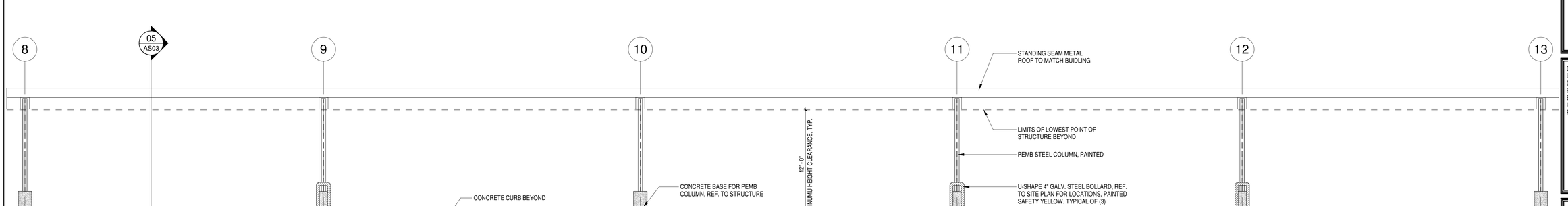

TRAILER PARKING FRONT ELEVATION 01
3/16" = 1'-0"

TEXAS PARKS & WILDLIFE

REGISTERED ARCHITECT JOE W. MAHLER 09601 STATE OF TEXAS
04/23/2021

PDG ARCHITECTS

10000 RICHMOND
SUITE 100
HOUSTON, TX 77042
713-629-6100

MATHIS FISHERIES OFFICE
AT LAKE CORPUS CHRISTI, MATHIS, TEXAS
PROJECT NUMBER: 127144

DATE: 04-23-2021
DESIGNED BY:
DRAWN BY:
REVIEWED BY:
REVISED:
REVISED:

SHEET TITLE
TRAILER CANOPY ELEV. AND SECTIONS

SHEET NUMBER
AS03

PERCENTAGE: BID SET

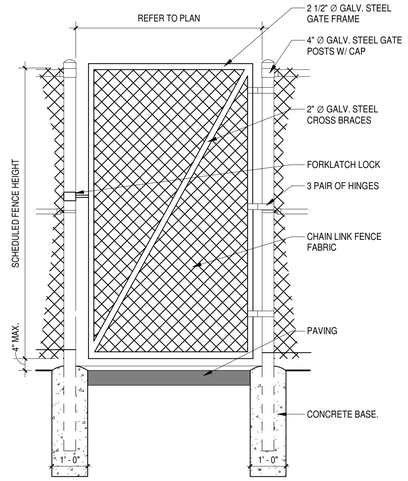

CHAIN LINK FENCE TRAFFIC SWING GATE
1/2" = 1'-0" (12)

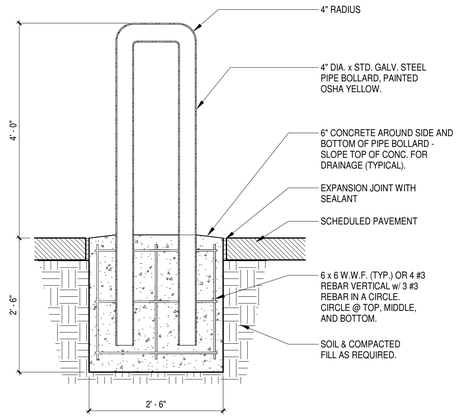

U - SHAPE STEEL PIPE BOLLARD
3/4" = 1'-0" (11)

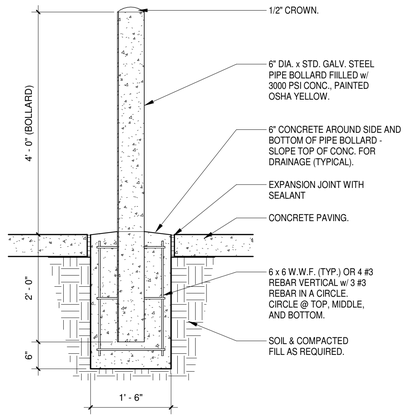

STEEL PIPE BOLLARD
3/4" = 1'-0" (10)

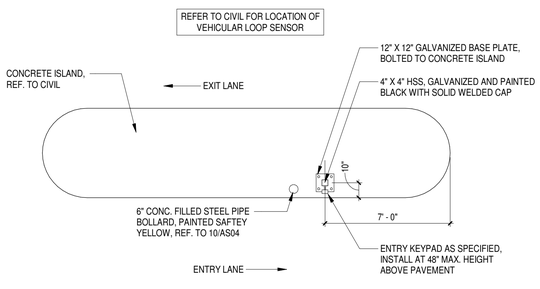

KEYPAD DETAIL AT MAIN ENTRY GATES
1/4" = 1'-0" (08)

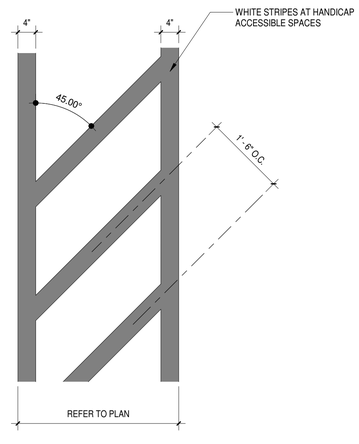

ACCESSIBLE ROUTE PAVEMENT MARKING
3/4" = 1'-0" (07)

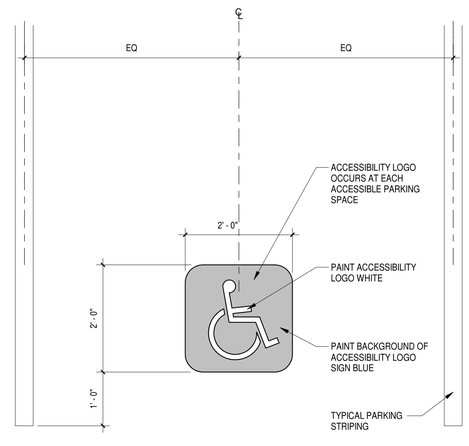

ACCESSIBLE PARKING LOGO
3/4" = 1'-0" (06)

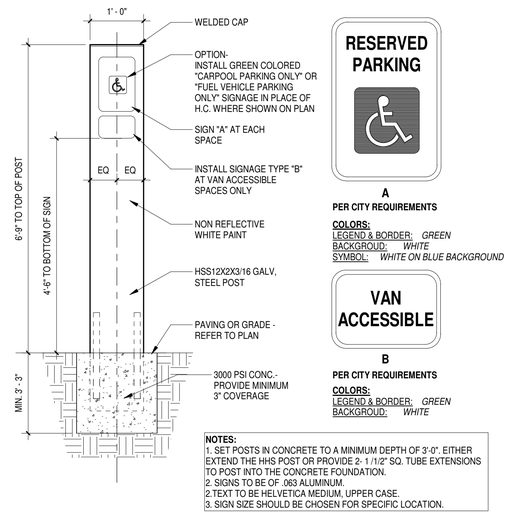

NOTES:
1. SET POSTS IN CONCRETE TO A MINIMUM DEPTH OF 3'-0". EITHER EXTEND THE HHS POST OR PROVIDE 2- 1 /1/2" SQ. TUBE EXTENSIONS TO POST INTO THE CONCRETE FOUNDATION.
2. SIGNS TO BE OF .063 ALUMINUM.
2. TEXT TO BE HELVETICA MEDIUM, UPPER CASE.
3. SIGN SIZE SHOULD BE CHOSEN FOR SPECIFIC LOCATION.

ADA PARKING SIGNAGE
3/4" = 1'-0" (05)

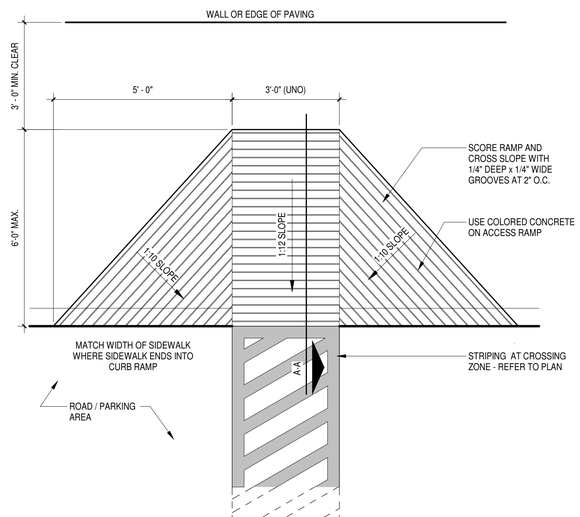

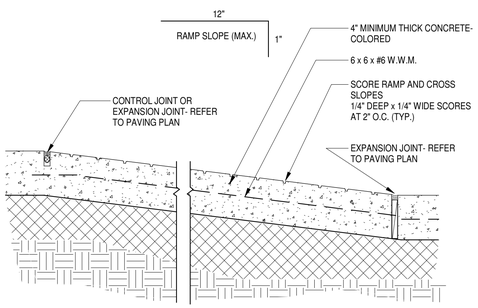

SECTION A-A THROUGH RAMP
NOT TO SCALE

ADA PARKING RAMPS
1/2" = 1'-0" (03)

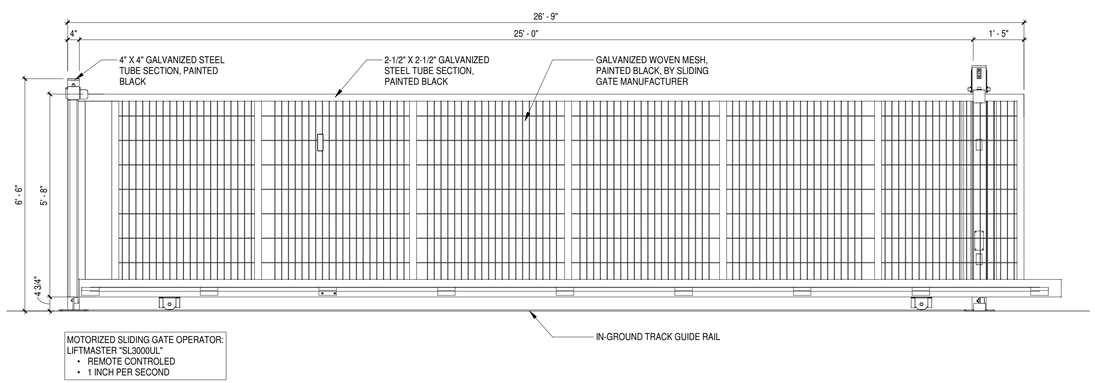

MOTORIZED SLIDING GATE OPERATOR:
LIFTMASTER "SL3000UL"
- REMOTE CONTROLED
- 1 INCH PER SECOND

MOTORIZED VEHICULAR SLIDING GATE
1/2" = 1'-0" (01)

TEXAS PARKS & WILDLIFE

REGISTERED ARCHITECT JOE W. MAHLER 09601 STATE OF TEXAS
04/23/2021

PDG ARCHITECTS
10000 RICHMOND
SUITE 100
HOUSTON, TX 77042
713-629-6100

MATHIS FISHERIES OFFICE
AT LAKE CORPUS CHRISTI, MATHIS, TEXAS
PROJECT NUMBER: 127144

DATE: 04-23-2021
DESIGNED BY:
DRAWN BY:
REVIEWED BY:
REVISED:
REVISED:

SHEET TITLE
SITE DETAILS

SHEET NUMBER
AS04

PERCENTAGE: BID SET

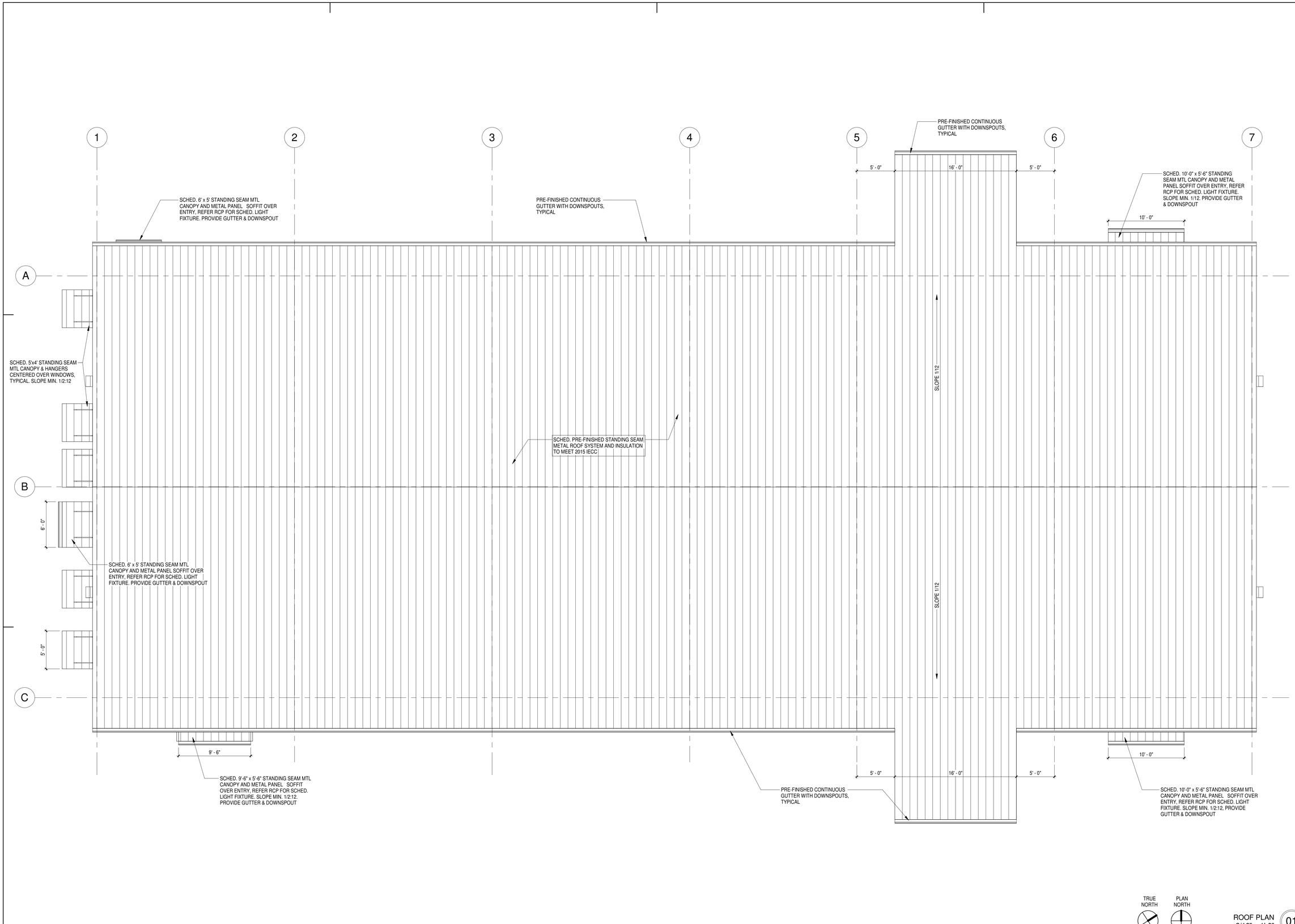

TRUE NORTH

PLAN NORTH

ROOF PLAN
3/16" = 1'-0"
01

TEXAS PARKS & WILDLIFE

REGISTERED ARCHITECT
JOE W. MAHLER
09601
STATE OF TEXAS
04/23/2021

PDG ARCHITECTS

10000 RICHMOND
SUITE 100
HOUSTON, TX 77042
713-629-6100

MATHIS FISHERIES OFFICE

AT LAKE CORPUS CHRISTI, MATHIS, TEXAS

PROJECT NUMBER: 127144

DATE: 04-23-2021
DESIGNED BY:
DRAWN BY:
REVIEWED BY:
REVISED:
REVISED:

SHEET TITLE

ROOF PLAN

SHEET NUMBER

A101

PERCENTAGE: BID SET

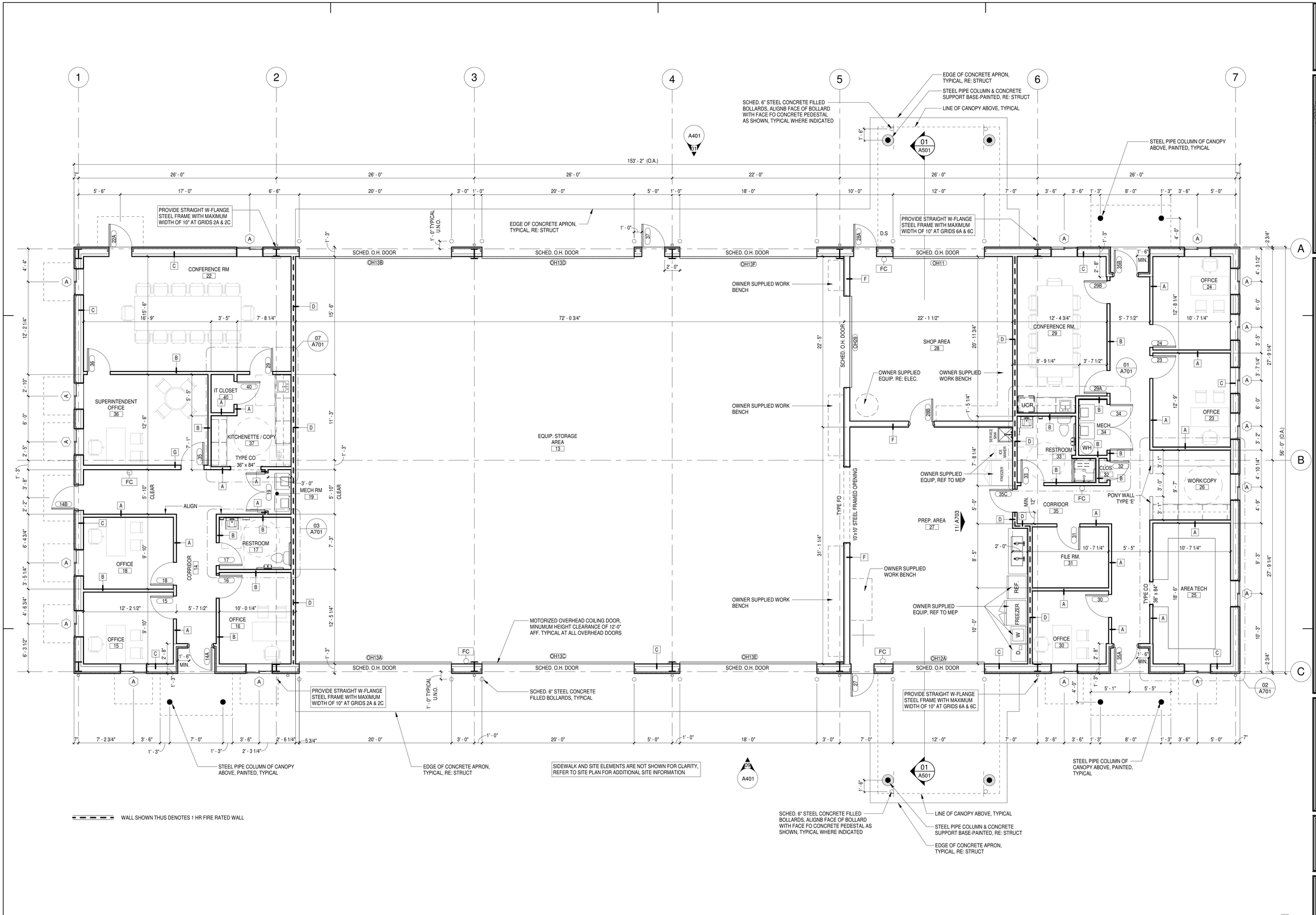

FLOOR PLAN 01
3/16" = 1'-0"

TEXAS PARKS & WILDLIFE

REGISTERED ARCHITECT JOE W. MAHLER 09601 STATE OF TEXAS
04/23/2021

PDG ARCHITECTS
10000 RICHMOND
SUITE 100
HOUSTON, TX 77042
713-629-6100

MATHIS FISHERIES OFFICE
AT LAKE CORPUS CHRISTI, MATHIS, TEXAS
PROJECT NUMBER: 127144

DATE: 04-23-2021
DESIGNED BY:
DRAWN BY:
REVIEWED BY:
REVISED:
REVISED:

SHEET TITLE
FLOOR PLAN

SHEET NUMBER
A201

PERCENTAGE: BID SET

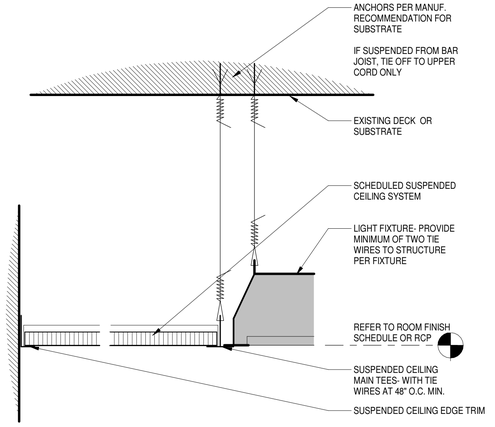

TYPICAL SUSPENDED CEILING SYSTEM DETAIL
3" = 1'-0"
12

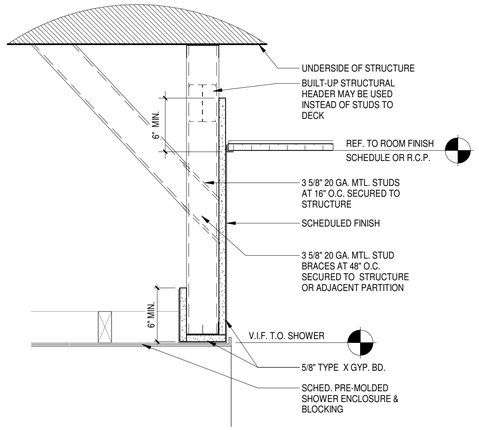

FURR DOWN OVER SHOWER
1 1/2" = 1'-0"
11

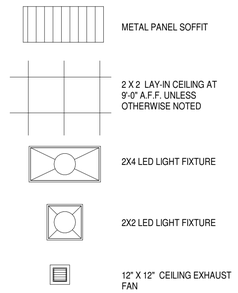

R.C.P. SYMBOLS LEGEND
1/4" = 1'-0"
10

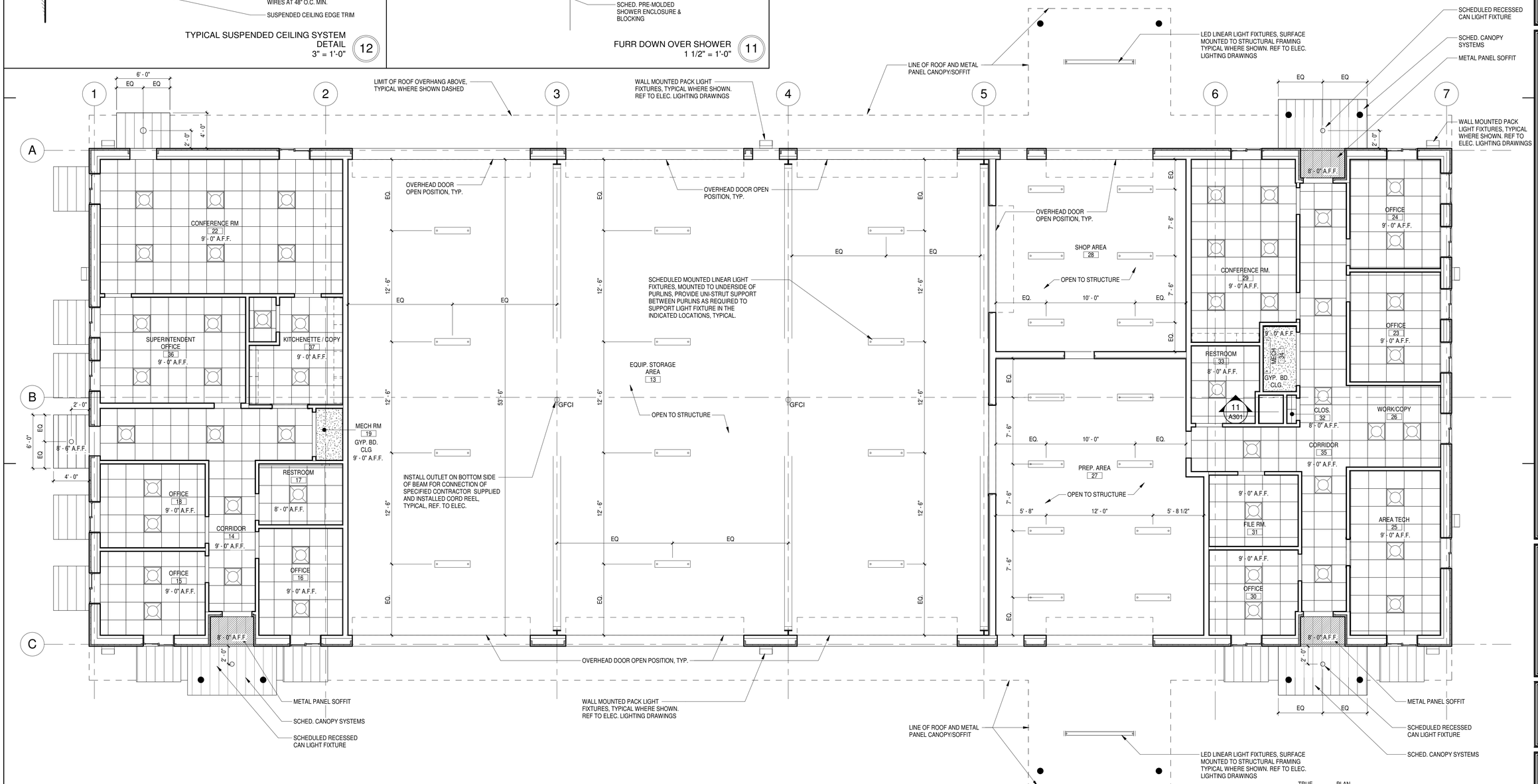

REFLECTED CEILING PLAN
3/16" = 1'-0"
01

TEXAS PARKS & WILDLIFE

REGISTERED ARCHITECT JOE W. MAHLER 09601 STATE OF TEXAS
04/23/2021

PDG ARCHITECTS
10000 RICHMOND
SUITE 100
HOUSTON, TX 77042
713-629-6100

MATHIS FISHERIES OFFICE
AT LAKE CORPUS CHRISTI, MATHIS, TEXAS
PROJECT NUMBER: 127144

DATE: 04-23-2021
DESIGNED BY:
DRAWN BY:
REVIEWED BY:
REVISED:
REVISED:

SHEET TITLE
REFLECTED CEILING PLAN

SHEET NUMBER
A301

PERCENTAGE: BID SET

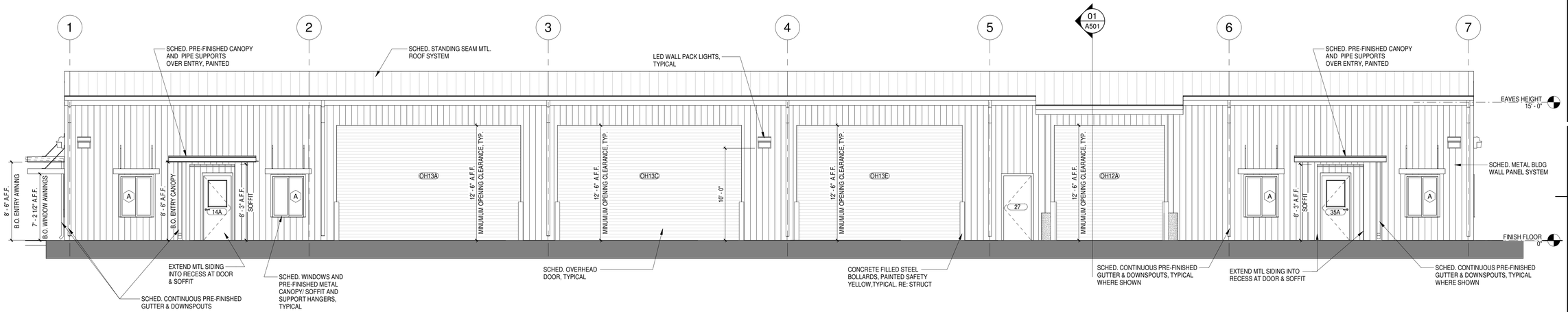

SOUTH ELEVATION 09
3/16" = 1'-0"

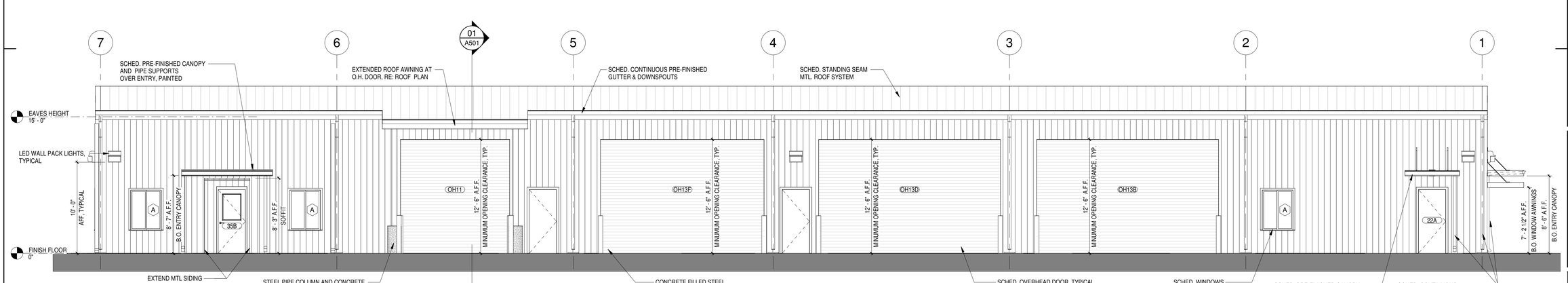

NORTH ELEVATION 01
3/16" = 1'-0"

TEXAS PARKS & WILDLIFE

REGISTERED ARCHITECT JOE W. MAHLER 09601 STATE OF TEXAS
04/23/2021

PDG ARCHITECTS
10000 RICHMOND
SUITE 100
HOUSTON, TX 77042
713-629-6100

MATHIS FISHERIES OFFICE
AT LAKE CORPUS CHRISTI, MATHIS, TEXAS
PROJECT NUMBER: 127144

DATE: 04-23-2021
DESIGNED BY:
DRAWN BY:
REVIEWED BY:
REVISED:
REVISED:

SHEET TITLE
BUILDING ELEVATIONS

SHEET NUMBER
A401

PERCENTAGE: BID SET

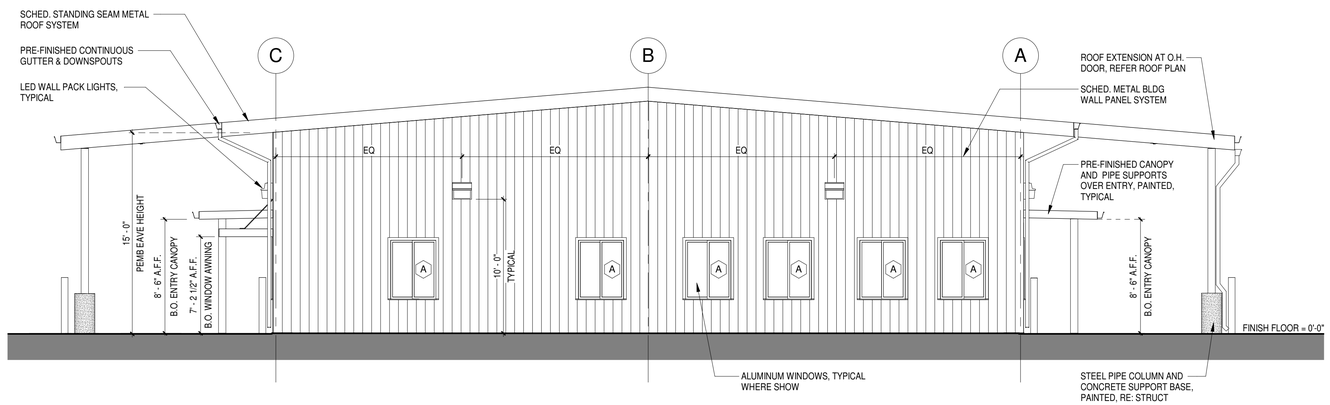

EAST ELEVATION
3/16" = 1'-0"
02

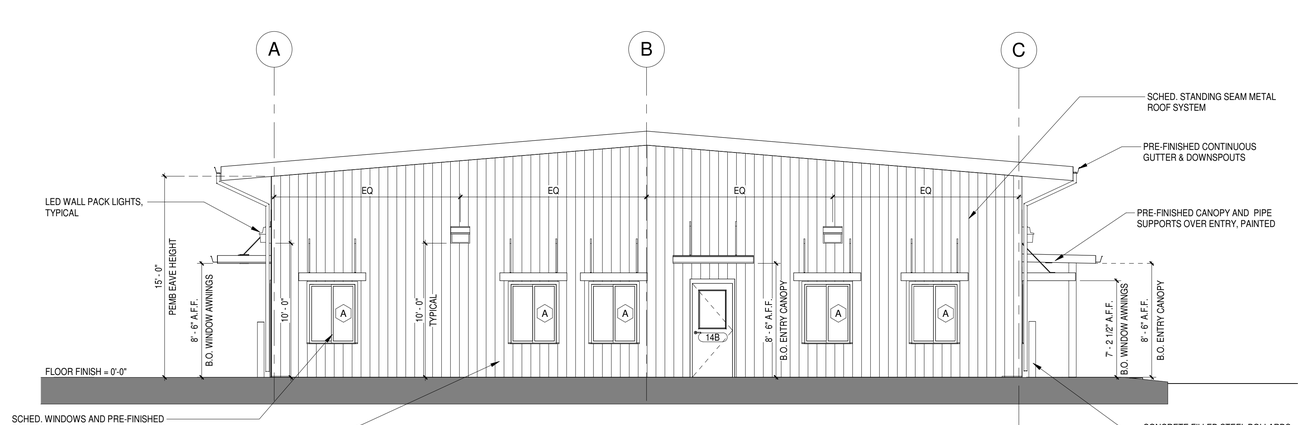

WEST ELEVATION
3/16" = 1'-0"
01

TEXAS PARKS & WILDLIFE

REGISTERED ARCHITECT JOE W. MAHLER 09601 STATE OF TEXAS
04/23/2021

PDG ARCHITECTS
10000 RICHMOND
SUITE 100
HOUSTON, TX 77042
713-629-6100

MATHIS FISHERIES OFFICE
AT LAKE CORPUS CHRISTI, MATHIS, TEXAS
PROJECT NUMBER: 127144

DATE: 04-23-2021
DESIGNED BY:
DRAWN BY:
REVIEWED BY:
REVISED:
REVISED:

SHEET TITLE
BUILDING ELEVATIONS

SHEET NUMBER
A402

PERCENTAGE: BID SET

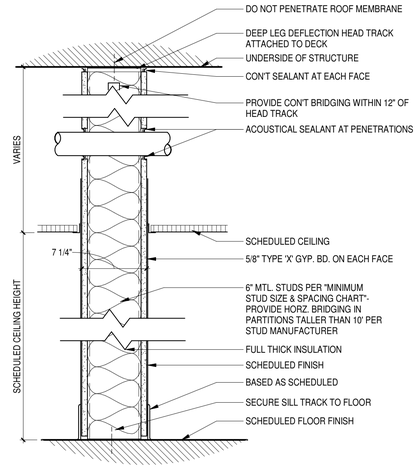

NOTE:
UTILIZE WATER RESISTANT GYP. BD. IN POTENTIALLY WET AREAS SUCH AS RESTROOMS AND KITCHENS. UTILIZE 1/2" CEMENTITIOUS BACKER BOARD AT AREAS TO RECEIVE CERAMIC TILE.

'G' 7 1/4" PARTITION INSULATED
1 1/2" = 1'-0" (12)

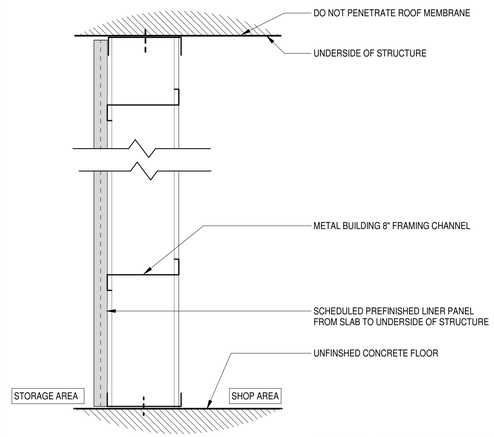

'F' METAL BLDG LINER INTERIOR PARTITION
1 1/2" = 1'-0" (11)

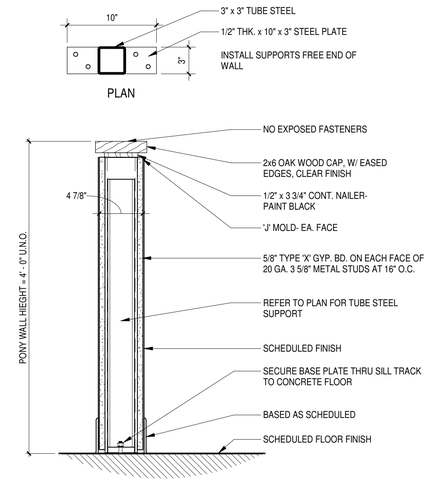

'E' 4 7/8" PONY WALL
1 1/2" = 1'-0" (10)

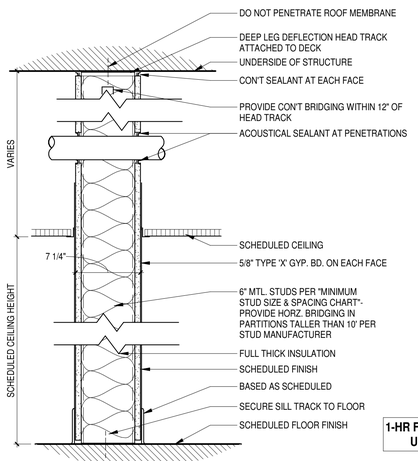

1-HR FIRE RATED
UL - 465

NOTE:
UTILIZE WATER RESISTANT GYP. BD. IN POTENTIALLY WET AREAS SUCH AS RESTROOMS AND KITCHENS. UTILIZE 1/2" CEMENTITIOUS BACKER BOARD AT AREAS TO RECEIVE CERAMIC TILE.

'D' 7 1/4" PARTITION TO DECK- 1-HR FIRE RATED - INSULATED
1 1/2" = 1'-0" (08)

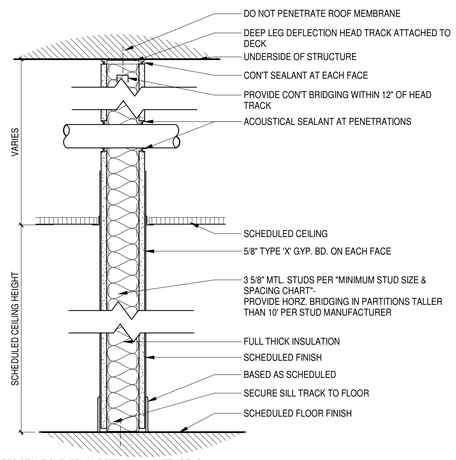

NOTE:
UTILIZE WATER RESISTANT GYP. BD. IN POTENTIALLY WET AREAS SUCH AS RESTROOMS AND KITCHENS. UTILIZE 1/2" CEMENTITIOUS BACKER BOARD AT AREAS TO RECEIVE CERAMIC TILE.

'B' 5" PARTITION TO DECK- INSULATED
1 1/2" = 1'-0" (07)

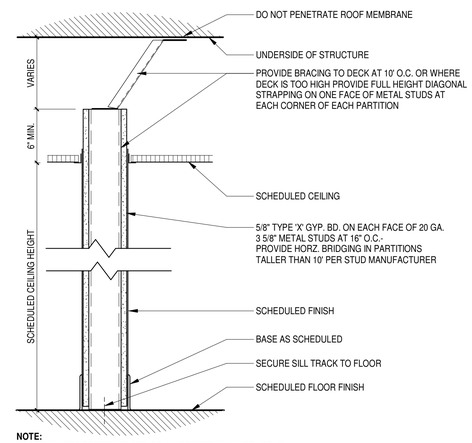

NOTE:
UTILIZE WATER RESISTANT GYP. BD. IN POTENTIALLY WET AREAS SUCH AS RESTROOMS AND KITCHENS. UTILIZE 1/2" CEMENTITIOUS BACKER BOARD AT AREAS TO RECEIVE CERAMIC TILE.

'A' 5" PARTITION PAST CEILING
1 1/2" = 1'-0" (06)

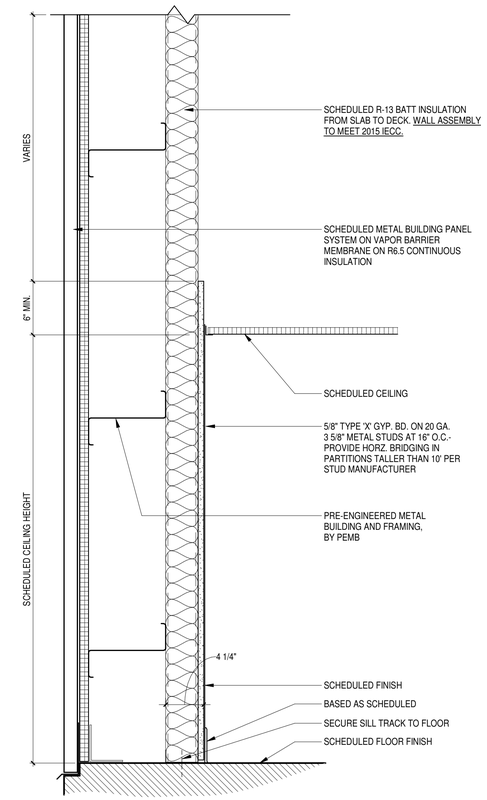

NOTE:
UTILIZE WATER RESISTANT GYP. BD. IN POTENTIALLY WET AREAS SUCH AS RESTROOMS AND KITCHENS. UTILIZE 1/2" CEMENTITIOUS BACKER BOARD AT AREAS TO RECEIVE CERAMIC TILE.

'C' 4 1/4" FURR PARTITION PAST CEILING- INSULATED
1 1/2" = 1'-0" (05)

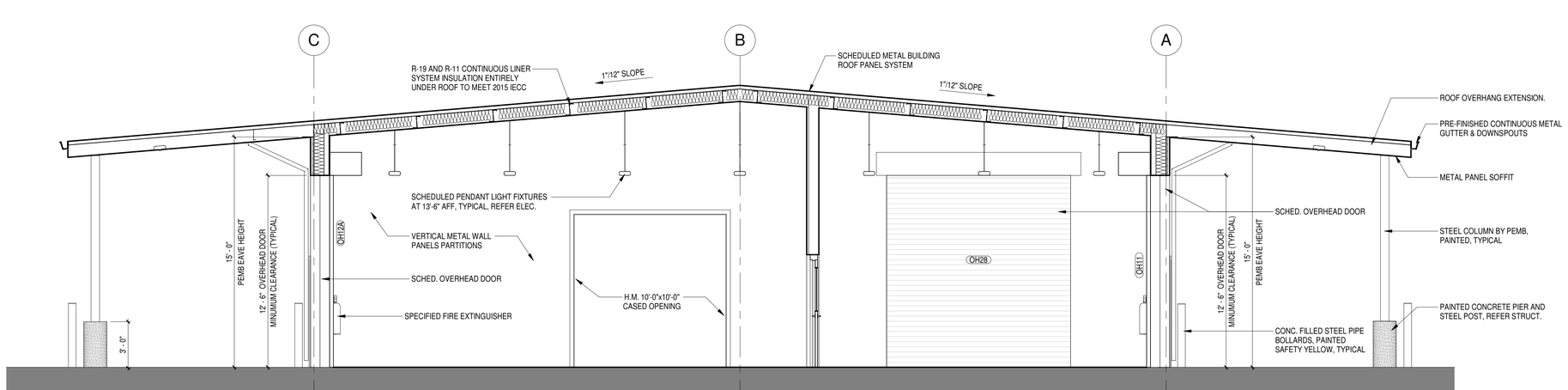

BUILDING SECTION THROUGH LOW BAY
1/4" = 1'-0" (01)

TEXAS PARKS & WILDLIFE

REGISTERED ARCHITECT JOE W. MAHLER 09601 STATE OF TEXAS
04/23/2021

PDG ARCHITECTS
10000 RICHMOND
SUITE 100
HOUSTON, TX 77042
713-629-6100

MATHIS FISHERIES OFFICE
AT LAKE CORPUS CHRISTI, MATHIS, TEXAS
PROJECT NUMBER: 127144

DATE:	04-23-2021
DESIGNED BY:	
DRAWN BY:	
REVIEWED BY:	
REVISED:	
REVISED:	

SHEET TITLE
BUILDING SECTIONS & WALL TYPES

SHEET NUMBER
A501

PERCENTAGE: BID SET

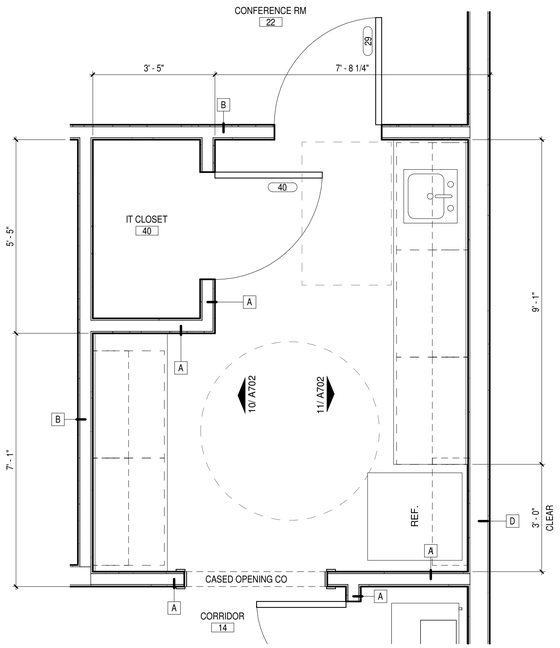

ENLARGED FLOOR PLAN
KITCHEN/COPY 21
1/2" = 1'-0"

07

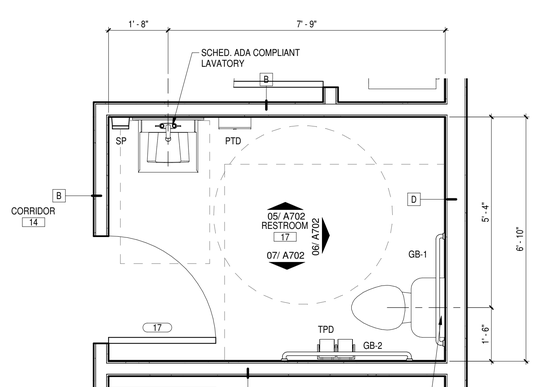

NOTE:
REFER TO SHEET G002 FOR DETAILED RESTROOM ACCESSORIES MOUNTING HEIGHT PER TAS REQUIREMENTS.

ENLARGED FLOOR PLAN RESTROOM 17
1/2" = 1'-0"

03

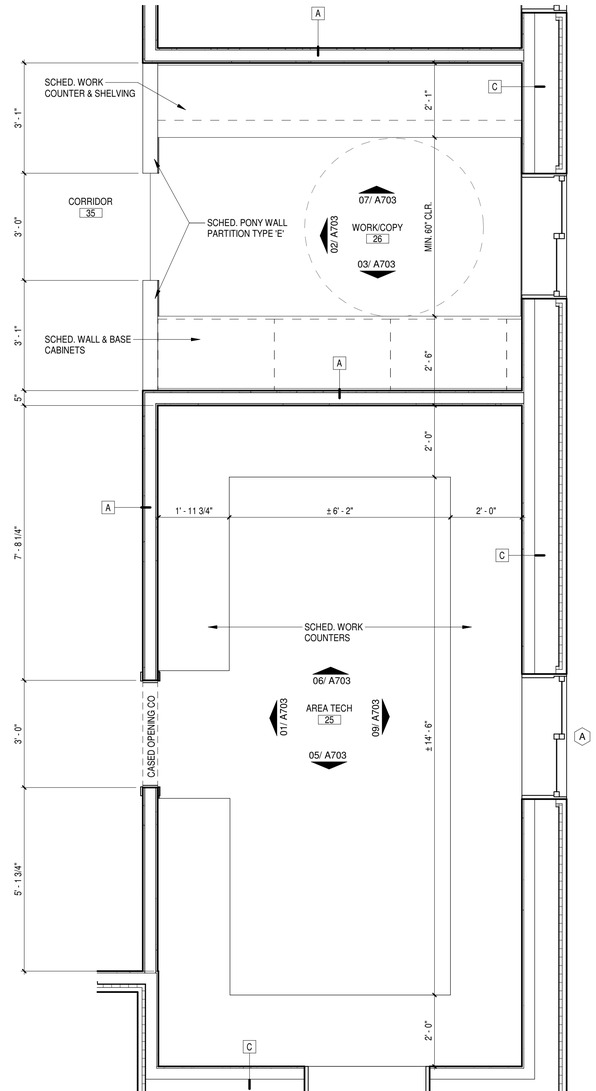

ENLARGED FLOOR PLAN AREA TECH &
WORK/COPY
1/2" = 1'-0"

02

NOTE:
REFER TO SHEET G002 FOR DETAILED RESTROOM ACCESSORIES MOUNTING HEIGHT PER TAS REQUIREMENTS.

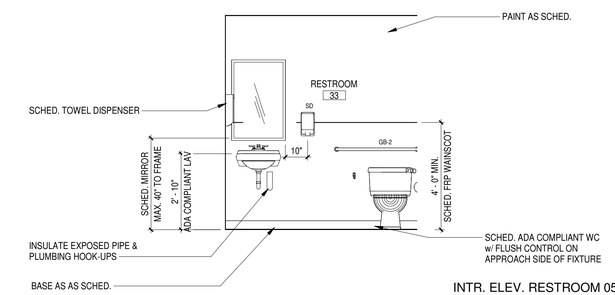

INTR. ELEV. RESTROOM 05
3/8" = 1'-0"

09

RESTROOM ACCESSORIES SCHEDULE

CODE	NAME	MANUF.	DESCRIPTION	REMARKS
TPD	TOILET PAPER DISP.	BOBRICK	B-262, STAINLESS STEEL FINISH	SURFACE MTD.
SD	MANUAL SOAP DISPENSER	GOJO	VERIFY MODEL WITH OWNER	SURFACE MTD.
GB-1	GRAB BAR 36" B-5806	BOBRICK	FLANGES w/ CONCEALED FASTENERS, S.S.	SURFACE MTD.
GB-2	GRAB BAR 42" B-5806	BOBRICK	FLANGES w/ CONCEALED FASTENERS, S.S.	SURFACE MTD.
PTD	PAPER TOWEL DISP.	BOBRICK	STAINLESS STEEL-SATIN FINISH.	SURFACE MTD.
M	GLASS MIRROR	BOBRICK	B-1658 SS CHANNEL W/ POLISHED FINISH	24"W x 36"H
SRCR	SHOWER CURTAIN ROD	BOBRICK	STAINLESS STEEL-SATIN FINISH	SURFACE MTD.
SRC	SHOWER CURTAIN	BOBRICK	WHITE VINYL	SURFACE MTD.
CH	COAT HOOK	BOBRICK	STAINLESS STEEL-SATIN FINISH	SURFACE MTD.

GERNERAL ACCESSORIES NOTES
1 CONTRACTOR IS TO INSTALL ACCESSORIES PER MANUFACTURER'S SPECIFICATIONS.
2 REFER TO SPECIFICATIONS FOR MODEL NUMBERS
3 REFER TO TAS SHEET FOR MOUNTING HEIGHTS

RESTROOM ACCESSORY SCHEDULE
NTS

05

NOTE:
REFER TO SHEET G002 FOR DETAILED RESTROOM ACCESSORIES MOUNTING HEIGHT PER TAS REQUIREMENTS.

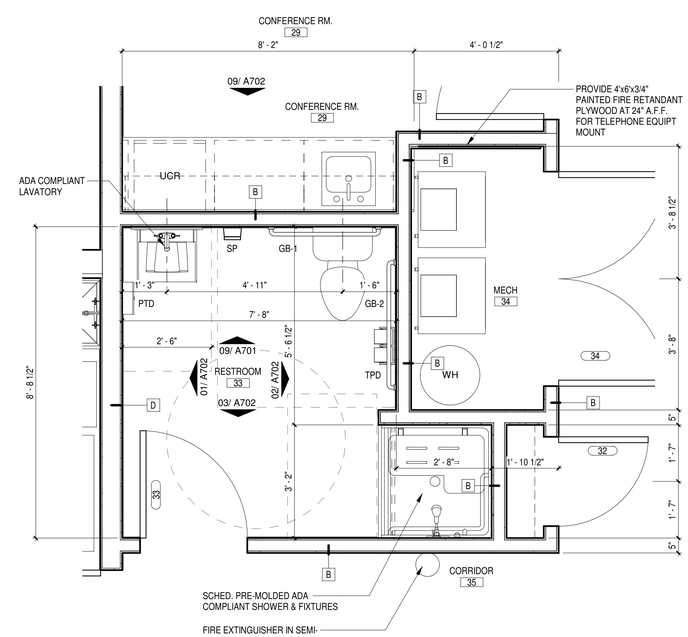

ENLARGED FLOOR PLAN RESTROOM 05
1/2" = 1'-0"

01

TEXAS PARKS & WILDLIFE

REGISTERED ARCHITECT
JOE W. MAHLER
09601
STATE OF TEXAS
04/23/2021

PDG ARCHITECTS
10000 RICHMOND
SUITE 100
HOUSTON, TX 77042
713-629-6100

MATHIS FISHERIES OFFICE
AT LAKE CORPUS CHRISTI, MATHIS, TEXAS
PROJECT NUMBER: 127144

DATE: 04-23-2021
DESIGNED BY:
DRAWN BY:
REVIEWED BY:
REVISED:
REVISED:

SHEET TITLE
ENLARGED PLAN AND DETAIL

SHEET NUMBER
A701

PERCENTAGE BID SET

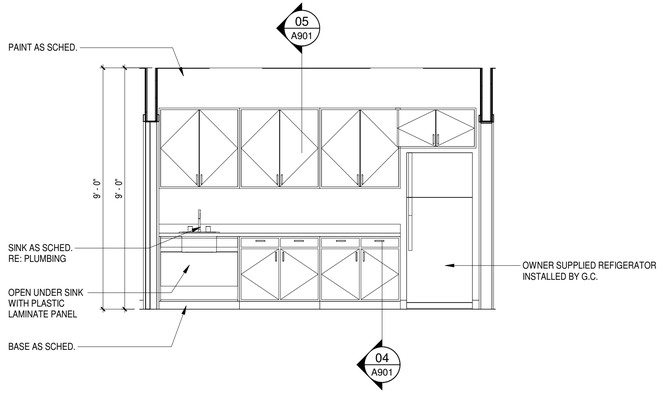

INTR. ELEV. COPY 37
3/8" = 1'-0"
11

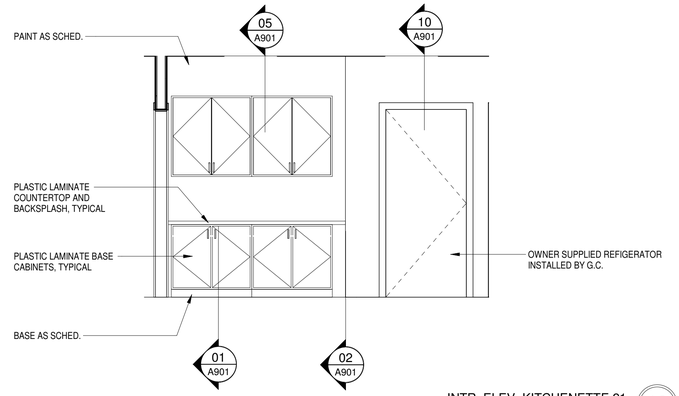

INTR. ELEV. KITCHENETTE 21
3/8" = 1'-0"
10

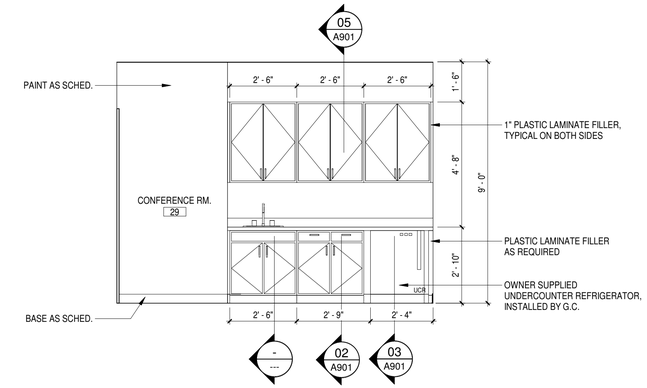

INTR. ELEV. SINK CONFERENCE 29
3/8" = 1'-0"
09

NOTE:
REFER TO SHEET G002 FOR DETAILED RESTROOM ACCESSORIES MOUNTING HEIGHT PER TAS REQUIREMENTS.

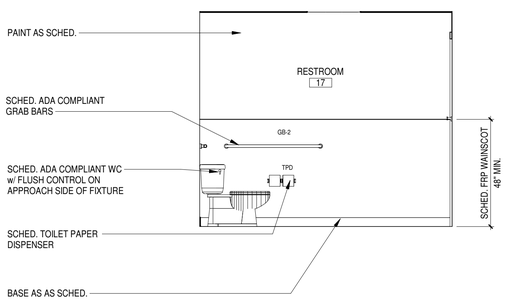

INTR. ELEV. RR 17 AT WATER CLOSET
3/8" = 1'-0"
07

NOTE:
REFER TO SHEET G002 FOR DETAILED RESTROOM ACCESSORIES MOUNTING HEIGHT PER TAS REQUIREMENTS.

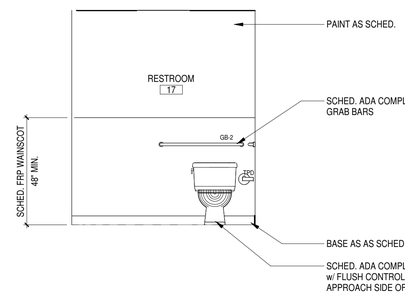

INTR. ELEV. RR 17 AT WC
3/8" = 1'-0"
06

NOTE:
REFER TO SHEET G002 FOR DETAILED RESTROOM ACCESSORIES MOUNTING HEIGHT PER TAS REQUIREMENTS.

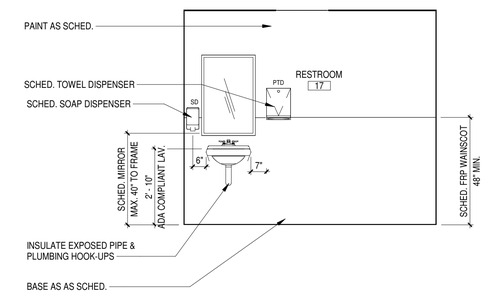

INTR. ELEV. RR 17 AT LAVATORY
3/8" = 1'-0"
05

NOTE:
REFER TO SHEET G002 FOR DETAILED RESTROOM ACCESSORIES MOUNTING HEIGHT PER TAS REQUIREMENTS

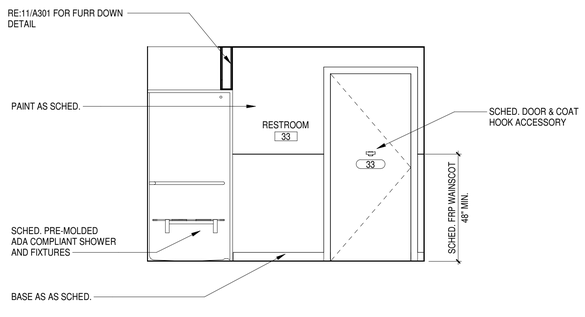

INTR. ELEV. RR 05 SHOWER
3/8" = 1'-0"
03

NOTE:
REFER TO SHEET G002 FOR DETAILED RESTROOM ACCESSORIES MOUNTING HEIGHT PER TAS REQUIREMENTS.

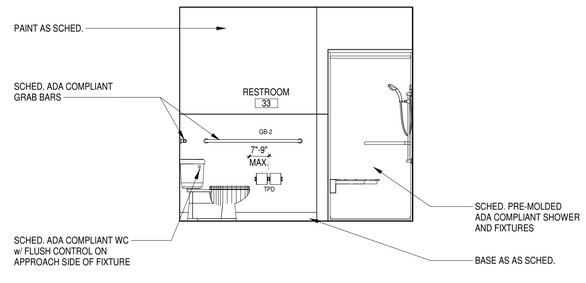

INTR. ELEV. SHOWER RR 05
3/8" = 1'-0"
02

NOTE:
REFER TO SHEETG002 FOR DETAILED RESTROOM ACCESSORIES MOUNTING HEIGHT PER TAS REQUIREMENTS.

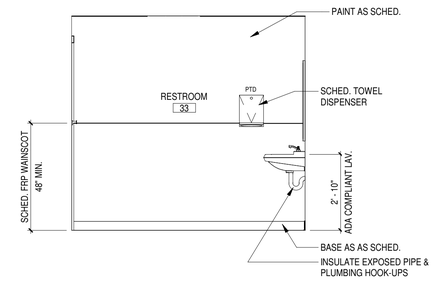

INTR. ELEV. RR 05 WALL
3/8" = 1'-0"
01

TEXAS PARKS & WILDLIFE

REGISTERED ARCHITECT JOE W. MAHLER 09601 STATE OF TEXAS
04/23/2021

PDG ARCHITECTS
10000 RICHMOND
SUITE 100
HOUSTON, TX 77042
713-629-6100

MATHIS FISHERIES OFFICE
AT LAKE CORPUS CHRISTI, MATHIS, TEXAS
PROJECT NUMBER: 127144

DATE: 04-23-2021
DESIGNED BY:
DRAWN BY:
REVIEWED BY:
REVISED:
REVISED:

SHEET TITLE
INTERIOR ELEVATIONS

SHEET NUMBER
A702

PERCENTAGE: BID SET

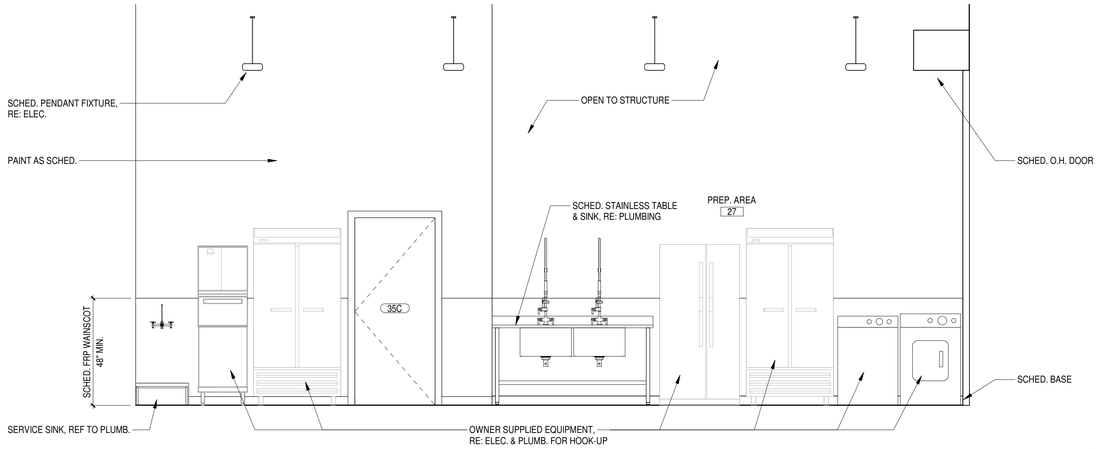

INTR. ELEV. PREP AREA 27
3/8" = 1'-0"
11

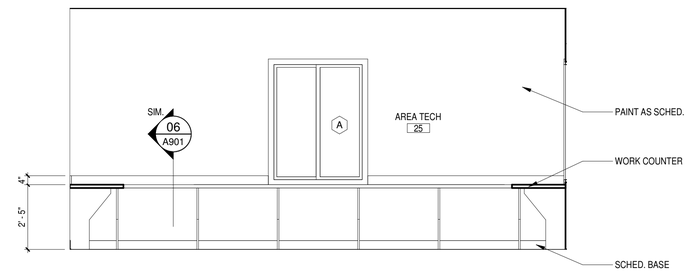

INTR. ELEV. AREA TECH
3/8" = 1'-0"
09

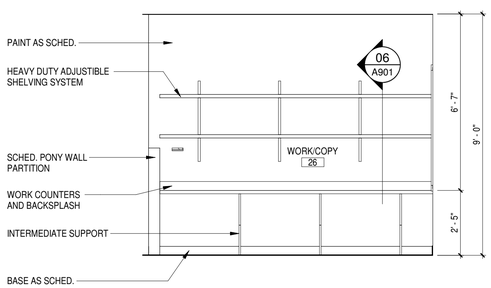

INTR. ELEV. WORK 26 COUNTER
3/8" = 1'-0"
07

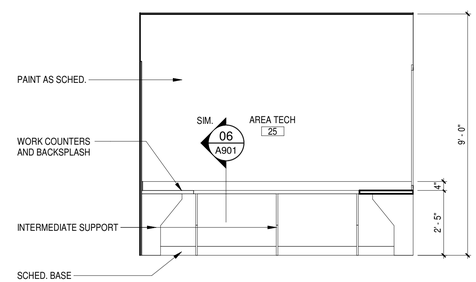

INTR. ELEV. AREA TECH 25.
3/8" = 1'-0"
06

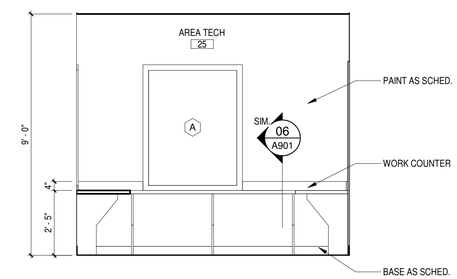

INTR. ELEV. AREA TECH 25
3/8" = 1'-0"
05

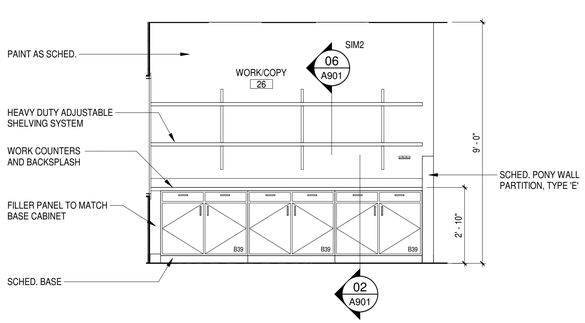

INTR. ELEV. COPY 26
3/8" = 1'-0"
03

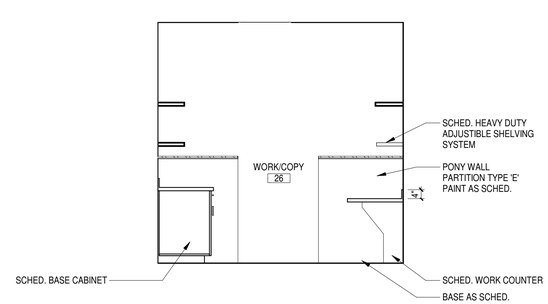

INTR. ELEV. WORK/COPY 26
3/8" = 1'-0"
02

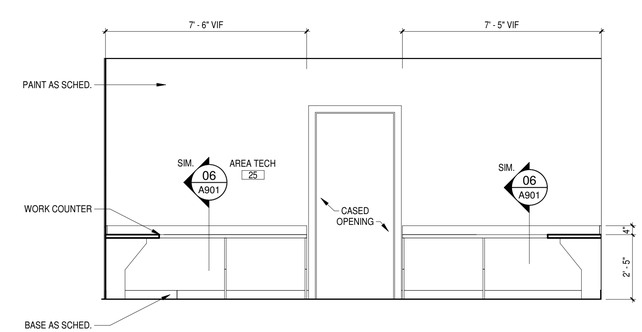

INTR. ELEV. AT AREA TECH 25
3/8" = 1'-0"
01

TEXAS PARKS & WILDLIFE

REGISTERED ARCHITECT JOE W. MAHLER 09601 STATE OF TEXAS
04/23/2021

PDG ARCHITECTS
10000 RICHMOND
SUITE 100
HOUSTON, TX 77042
713-629-6100

MATHIS FISHERIES OFFICE
AT LAKE CORPUS CHRISTI, MATHIS, TEXAS
PROJECT NUMBER: 127144

DATE: 04-23-2021
DESIGNED BY:
DRAWN BY:
REVIEWED BY:
REVISED:
REVISED:

SHEET TITLE
INTERIOR ELEVATIONS

SHEET NUMBER
A703

PERCENTAGE: BID SET

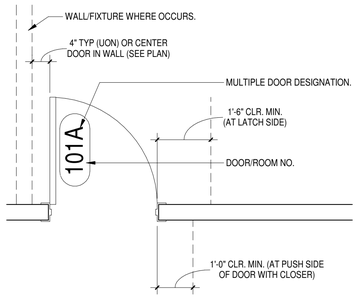

DOOR NOTES 12
1/2" = 1'-0"

1. EXIT DOORS ARE TO BE OPERABLE WITHOUT KEY OR "SPECIAL KNOWLEDGE OR EFFORT".

2. CLOSERS, WHERE REQUIRED ARE TO HAVE OPENING FORCE NOT TO EXCEED 5 LBS. WITH EXCEPTION OF FIRE RATED EXTERIOR DOORS WHICH ARE NOT TO EXCEED 15 LBS.

3. THRESHOLDS SHALL NOT BE GREATER THAN 1/2" IN TOTAL HEIGHT WITH THE LEADING EDGE SLOPED AT ANGLE NOT MORE THAN 45 DEGREES SO THAT NO SINGLE VERTICAL CHANGE IS OVER 1/4".

4. THE SWEEP PERIOD OF THE CLOSER SHALL BE ADJUSTED SO THAT FROM AN OPEN POSITION OF 90 DEGREES, THE DOOR WILL TAKE AT LEAST 5 SECONDS TO MOVE TO A POINT 12 DEGREES THE LATCH, MEASURED TO THE LEADING EDGE OF THE DOOR.

5. ALL GLAZING IN DOORS IS TO BE FULLY TEMPERED GLASS, TYP.

6. REF TO 09/A0801 FOR TYPICAL FLOOR DOOR STOP DETAIL.

7. = GLAZING.

DOOR SCHEDULE LEGEND:

HDWR = HARDWARE
H.M. = HOLLOW METAL
STL = STEEL
ALUM= ALUMINUM
SGL = SINGLE
DBL = DOUBLE
PF = PRE-FINISHED
PLAM= PLASTIC LAMINATE
PR = PAIR
PT = PAINT FINISH
OD = OVERHEAD DOOR
S.C. = SOLID CORE WOOD
WD. = WOOD DOOR

GLAZING SCHEDULE LEGEND:

GL-1 = FLOAT GLASS (NOT USED)
GL-2 = FULLY TEMPERED GLASS
GL-3 = INSULATED GLASS - TEMPERED (NOT USED)
GL-4 = STRUCTURAL GLASS (NOT USED)

GLAZING NOTE:

ALL GLAZING IN HAZARDOUS LOCATIONS IS TO BE SAFETY GLASS PER IBC 2406.1.

GENERAL DOOR NOTES 11
1/2" = 1'-0"

DOOR SCHEDULE

MARK	ROOM NAME	TYPE	WIDTH	HEIGHT	DOOR FINISH	DOOR MATERIAL	FRAME MATERIAL	FRAME FINISH	GLAZING	Fire Rating	HARDWARE SET	COMMENTS
14A	CORRIDOR	A	3' - 0"	7' - 0"	PAINT	FOAM CORE H.M.	H.M.	PAINT	YES		HW-1	
14B	CORRIDOR	A	3' - 0"	7' - 0"	PAINT	FOAM CORE H.M.	H.M.	PAINT	YES		HW-1	
15	OFFICE	D	3' - 0"	7' - 0"	P-LAM	S.C. WOOD	H.M.	PAINT	-		HW-3	
16	OFFICE	D	3' - 0"	7' - 0"	P-LAM	S.C. WOOD	H.M.	PAINT	-		HW-3	
17	RESTROOM	D	3' - 0"	7' - 0"	P-LAM	S.C. WOOD	H.M.	PAINT	-		HW-6	SCHED. COAT HOOK
18	OFFICE	D	3' - 0"	7' - 0"	P-LAM	S.C. WOOD	H.M.	PAINT	-		HW-3	
19	MECH RM	V	5' - 0"	7' - 0"	P-LAM	S.C. WOOD	H.M.	PAINT			HW-5	
22A	CONFERENCE RM	B	3' - 0"	7' - 0"	PAINT	FOAM CORE H.M.	H.M.	PAINT			HW-1	
23	OFFICE	D	3' - 0"	7' - 0"	P-LAM	S.C. WOOD	H.M.	PAINT	-		HW-3	
24	OFFICE	D	3' - 0"	7' - 0"	P-LAM	S.C. WOOD	H.M.	PAINT	-		HW-3	
27	PREP. AREA	B	3' - 0"	7' - 0"	PAINT	FOAM CORE H.M.	H.M.	PAINT	YES		HW-1	
28A	SHOP AREA	B	3' - 0"	7' - 0"	PAINT	FOAM CORE H.M.	H.M.	PAINT	YES		HW-1	
28B	PREP. AREA	A	3' - 0"	7' - 0"	PAINT	FOAM CORE H.M.	H.M.	PAINT	YES		HW-8	
29	KITCHENETTE / COPY	D	3' - 0"	7' - 0"	P-LAM	S.C. WOOD	H.M.	PAINT	-		HW-4	
29A	CONFERENCE RM.	D	3' - 0"	7' - 0"	P-LAM	S.C. WOOD	H.M.	PAINT	-		HW-4	
29B	CORRIDOR	D	3' - 0"	7' - 0"	P-LAM	S.C. WOOD	H.M.	PAINT	-		HW-4	
30	OFFICE	D	3' - 0"	7' - 0"	P-LAM	S.C. WOOD	H.M.	PAINT	-		HW-3	
31	FILE RM.	D	3' - 0"	7' - 0"	P-LAM	S.C. WOOD	H.M.	PAINT	-		HW-2	
32	CORRIDOR	D	2' - 6"	7' - 0"	P-LAM	S.C. WOOD	H.M.	PAINT	-		HW-4	
33	RESTROOM	D	3' - 0"	7' - 0"	P-LAM	S.C. WOOD	H.M.	PAINT	-		HW-6	SCHED. COAT HOOK
34	CORRIDOR	N	6' - 0"	7' - 0"	P-LAM	S.C. WOOD	H.M.	PAINT	-		HW-5	
35	CORRIDOR	D	3' - 0"	7' - 0"	P-LAM	S.C. WOOD	H.M.	PAINT	-		HW-4	
35A	CORRIDOR	A	3' - 0"	7' - 0"	PAINT	FOAM CORE H.M.	H.M.	PAINT	YES		HW-1	
35B	CORRIDOR	A	3' - 0"	7' - 0"	PAINT	FOAM CORE H.M.	H.M.	PAINT	YES		HW-1	
35C	PREP. AREA	E	3' - 0"	7' - 0"	PAINT	FOAM CORE H.M.	H.M.	PAINT	-	45 MIN.	HW-7	
36	CONFERENCE RM	D	3' - 0"	7' - 0"	P-LAM	S.C. WOOD	H.M.	PAINT	-		HW-4	
37	EQUIP. STORAGE AREA	B	3' - 0"	7' - 0"	PAINT	FOAM CORE H.M.	H.M.	PAINT	YES		HW-1	
40	IT CLOSET	D	3' - 0"	7' - 0"	P-LAM	S.C. WOOD	H.M.	PAINT	-		HW-4	
OH11	SHOP AREA	G	12' - 0"	12' - 6"	PAINT	FOAM CORE H.M.	STL	PAINT	-		HW-9	
OH12A	PREP. AREA	G	12' - 0"	12' - 6"	PAINT	STL	STL	PAINT	-		HW-9	
OH13A	EQUIP. STORAGE AREA	L	20' - 0"	12' - 6"	PAINT	STL	STL	PAINT	-		HW-9	
OH13B	EQUIP. STORAGE AREA	L	20' - 0"	12' - 6"	PAINT	STL	STL	PAINT	-		HW-9	
OH13C	EQUIP. STORAGE AREA	L	20' - 0"	12' - 6"	PAINT	STL	STL	PAINT	-		HW-9	
OH13D	EQUIP. STORAGE AREA	L	20' - 0"	12' - 6"	PAINT	STL	STL	PAINT	-		HW-9	
OH13E	EQUIP. STORAGE AREA	H	18' - 0"	12' - 6"	PAINT	STL	STL	PAINT	-		HW-9	
OH13F	EQUIP. STORAGE AREA	H	18' - 0"	12' - 6"	PAINT	STL	STL	PAINT	-		HW-9	
OH28	SHOP AREA	G	12' - 0"	12' - 6"	PAINT	STL	STL	PAINT	-		HW-9	

DOOR SCHEDULE 05

HARDWARE TYPE 1

1-1/2 PR HINGES - BLDG. MFG. STANDARD
1 LOCKSET - ML2055-LSA
1 CLOSER - DC6210-M54
1 KICKPLATE - 10 x 2 LDW - 16GA
1 STOP - 1214ES - 2-1/4"
1 THRESHOLD - 425
1 SWEEP - 102V
1 SEAL - 5050 - BN
1 RAIN DRIP(25) - 16A + 4"

HARDWARE TYPE 2

1-1/2 PR HINGES - TA2714 - 4-1/2 x 4-1/2
1 LOCKSET - ML2065-LSA
1 CLOSER - DC3200-M54
1 KICKPLATE - 10 x 2-LDW-16GA
1 STOP - 1211ES
1 SEAL - 5050 - BN

HARDWARE TYPE 3

1-1/2 PR BUTTS - T2714 - 4-1/2 x 4-1/2
1 LOCKSET - ML2051-LSA
1 STOP - 1211ES
3 SILENCERS - GJ64

HARDWARE TYPE 4

1-1/2 PR HINGES - T2714 - 4-1/2 x 4-1/2
1 PASSAGE - ML2010-LSA
1 STOP - 1211ES
3 SILENCERS - GJ64

HARDWARE TYPE 5

3 PR HINGES - T2714 -NRP - 4-1/2 x 4-1/2
2 FLUSHBOLTS - 3917 - 12"
1 DUST STRIKE - 3910
1 LOCKSET - ML2057 - LSA
1 ASTRAGAL - BY DOOR SUPPLIER
2 OH STOP - GJ45OS - TB
4 SILENCERS - GJ64

HARDWARE TYPE 6

1-1/2 PR HINGES - TA2714 - 4-1/2 x 4-1/2
1 PRIVACY - ML2030-LSA
1 CLOSER - DC3200-M54
1 KICKPLATE - 10 x 2-LDW-16GA
1 STOP - 1270WV
3 SILENCERS - GJ64

HARDWARE TYPE 7

1-1/2 PR BUTTS - T2714 - NRP - 4-1/2 x 4-1/2
1 LOCKSET - ML2065-LSA
1 STOP - 1214ES - 2-1/4"
1 CLOSER - DC3210 - M54
1 KICKPLATE - 10 x 2-LDW-16GA
1 THRESHOLD - 425
1 SWEEP - 102V
1 SEAL - 5050 - BN

HARDWARE TYPE 8

1-1/2 PR HINGES - BY DOOR SUPPLIER
1 LOCKSET - ML2065 - LSA
1 OH STOP - GJ90S - TB
3 SILENCERS - GJ64

HARDWARE TYPE 9

1 CYLINDER - 3000 - 200
BALANCE OF HARDWARE BY DOOR SUPPLIER

MANUFACTURERS LISTINGS

McKINNEY
CORBIN/RUSSWIN
TRIMCO
GLYNN-JOHNSON
NATIONAL GUARD PRODUCTS
ALL HARDWARE SHALL BE TEXAS ACCESSIBILITY COMPLIANT

DOOR HARDWARE NOTES 08
1/4" = 1'-0"

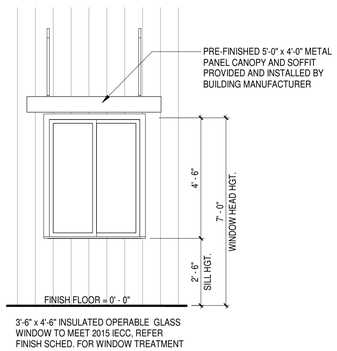

WINDOW TYPE A 07
3/8" = 1'-0"

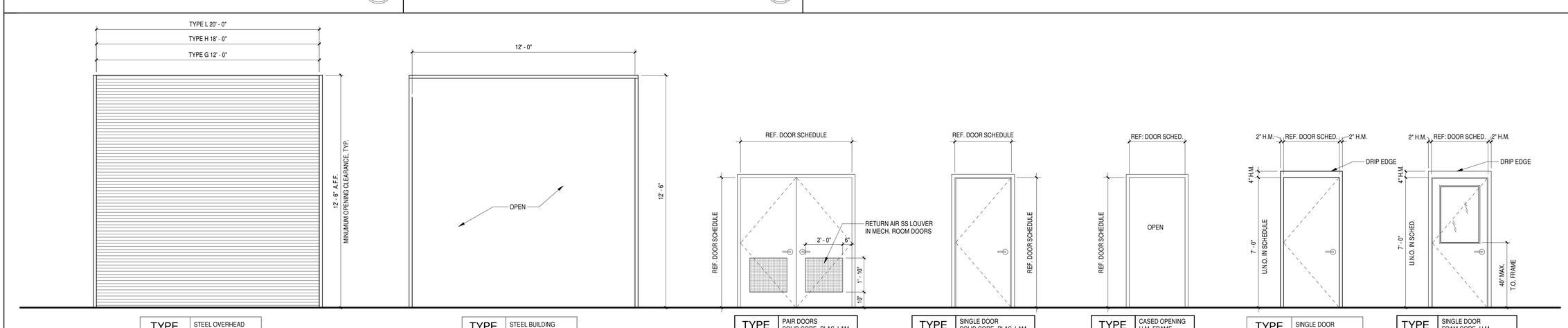

DOOR TYPES 01
3/8" = 1'-0"

TEXAS PARKS & WILDLIFE

REGISTERED ARCHITECT JOE W. MAHLER 09601 STATE OF TEXAS
04/23/2021

PDG ARCHITECTS
10000 RICHMOND
SUITE 100
HOUSTON, TX 77042
713-629-6100

MATHIS FISHERIES OFFICE
AT LAKE CORPUS CHRISTI, MATHIS, TEXAS
PROJECT NUMBER: 127144

DATE: 04-23-2021
DESIGNED BY:
DRAWN BY:
REVIEWED BY:
REVISED:
REVISED:

SHEET TITLE
DOOR & WINDOW SCHEDULES

SHEET NUMBER
A801

PERCENTAGE BID SET

ROOM FINISH SCHEDULE

RM. NO.	ROOM NAME	FLOOR FINISH	BASE	NORTH WALL FINISH	WEST WALL FINISH	SOUTH WALL FINISH	EAST WALL FINISH	CEILING FINISH	CEILING HEIGHT	NOTES
13	EQUIP. STORAGE AREA	SC-1	N/A	PT-2	PT-2	PT-2	PT-2	OPEN TO STRUCTURE	N/A	
14	CORRIDOR	VCT-1	B-1	PT-1	PT-1	PT-1	PT-1	ACT-1	9' - 0" A.F.F.	
15	OFFICE	CPT-1	B-1	PT-1	PT-1	PT-1	PT-1	ACT-1	9' - 0" A.F.F.	
16	OFFICE	CPT-1	B-1	PT-1	PT-1	PT-1	PT-1	ACT-1	9' - 0" A.F.F.	
17	RESTROOM	VCT-1	B-1	PT-1	PT-1	PT-1	PT-1	ACT-1	8'- 0" A.F.F.	
18	OFFICE	CPT-1	B-1	PT-1	PT-1	PT-1	PT-1	ACT-1	9' - 0" A.F.F.	
19	MECH RM	SC-1	B-2	PT-2	PT-2	PT-2	PT-2	OPEN TO STRUCTURE	N/A	
22	CONFERENCE RM	CPT-1	B-1	PT-1	PT-1	PT-1	PT-1	ACT-1	9' - 0" A.F.F.	
23	OFFICE	CPT-1	B-1	PT-1	PT-1	PT-1	PT-1	ACT-1	9' - 0" A.F.F.	
24	OFFICE	CPT-1	B-1	PT-1	PT-1	PT-1	PT-1	ACT-1	9' - 0" A.F.F.	
25	AREA TECH	VCT-1	B-1	PT-1	PT-1	PT-1	PT-1	ACT-1	9' - 0" A.F.F.	
26	WORK/COPY	VCT-1	B-1	PT-1	PT-1	PT-1	PT-1	ACT-1	9' - 0" A.F.F.	
27	PREP. AREA	SC-1	B-2	PT-2	PT-2	PT-2	PT-2/ FRP 48" H.	OPEN TO STRUCTURE	N/A	
28	SHOP AREA	SC-1	B-2	PT-2	PT-2	PT-2	PT-2	OPEN TO STRUCTURE	N/A	
29	CONFERENCE RM.	CPT-1	B-1	PT-1	PT-1	PT-1	PT-1	ACT-1	9' - 0" A.F.F.	
30	OFFICE	CPT-1	B-1	PT-1	PT-1	PT-1	PT-1	ACT-1	9' - 0" A.F.F.	
31	FILE RM.	VCT-1	B-1	PT-1	PT-1	PT-1	PT-1	ACT-1	9' - 0" A.F.F.	
32	CLOS.	VCT-1	B-1	PT-1	PT-1	PT-1	PT-1	ACT-1	9' - 0" A.F.F.	
33	RESTROOM	VCT-1	B-1	PT-2/ FRP 48" H.	PT-2/ FRP 48" H.	PT-2/ FRP 48" H.	PT-2/ FRP 48" H.	ACT-1	8'- 0" A.F.F.	
34	MECH	SC-1	B-2	PT-2	PT-2	PT-2	PT-2	OPEN TO STRUCTURE	N/A	
35	CORRIDOR	VCT-1	B-1	PT-1	PT-1	PT-1	PT-1	ACT-1	9' - 0" A.F.F.	
36	SUPERINTENDENT OFFICE	CPT-1	B-1	PT-1	PT-1	PT-1	PT-1	ACT-1	9' - 0" A.F.F.	
37	KITCHENETTE / COPY	VCT-1	B-1	PT-1	PT-1	PT-1	PT-1	ACT-1	9' - 0" A.F.F.	
40	IT CLOSET									

FINISH MATERIALS SCHEDULE

CODE	MATERIAL	MANUFACTURER	DESCRIPTION			ADDITIONAL INFORMATION
			SERIES	COLOR	DIMENSIONS	
ACT-1	ACOUSTICAL CEILING TILE	ARMSTRONG	CORTEGA #747	WHITE SQUARE EDGE TILE	24"X24"	GRID 15/16" ARMSTRONG "PRELUDE" EXPOSED TEE - WHITE
B-1	RUBBER FLOOR BASE	ROPPE		BLACK/BROWN #P193	4"	COVED
B-2	WOOD FLOOR BASE	-	-	PAINTED PT-4	1"X6"	-
SC-1	SEALED CONCRETE	BENJAMIN MOORE	M41	CLEAR, 50% GLOSS	3 COATS	FAST DRY FLOOR SEALER
VCT-1	VINYL COMPOSITION TILE	ARMSTRONG	CHROMASPIN	54811 ENCAUSTIC	12"X12"	-
TS-1	VCT TRANSITION STRIP	ROPPE	-	BLACK/BROWN #P193	-	-
CPT-1	CARPET	TARKETT	STYLE - 11471 BLOCKADE	54603 CEDAR DECK	-	-
PT-1	WALL, GYP. CEILING PAINT	BENJAMIN MOORE	LATEX - EGGSHELL	2125-70 "WEDDING VEIL"	2 COATS	ON #23 100% LATEX PRIMER "FRESH START"
PT-2	WORK/RESTROOM WALLS	BENJAMIN MOORE	LATEX - SEMIGLOSS	2125-70 "WEDDING VEIL"	2 COATS	ON #23 100% LATEX PRIMER "FRESH START"
PT-3	OH DOORS, TRACKS & EXTR. COLUMNS	BENJAMIN MOORE	ENAMEL - LOW LUSTER	212120-10 "GREY"	2 COATS	ON #C163 "IRONCLAD" LOW LUSTER ENAMEL
PT-4	WOOD BASE	BENJAMIN MOORE	LATEX - EGGSHELL	2112-40 "STONE"	2 COATS	ON #23 100% LATEX PRIMER "FRESH START"
PT-5	BOLLARDS	BENJAMIN MOORE	ENAMEL - LOW LUSTER	"SAFETY YELLOW"	2 COATS	ON #23 100% LATEX PRIMER "FRESH START"
PT-7	EXTERIOR PERSONNEL DOORS	BENJAMIN MOORE	ENAMEL - LOW LUSTER	2112-40 "STONE"	2 COATS	ON #C163 "IRONCLAD" LOW LUSTER ENAMEL
FRP	FRP PANEL	MARLITE	-	S100 S/2/S - "WHITE"	48" HIGH	INCLUDE MATCHED TRIM AT ALL SEAMS & EDGES
PL-1	P-LAM - COUNTER & BACKSPLASH	WILSONART	"GRAPHITE NEBULA"	4623-60	-	-
PL-2	P-LAM - CABINETS & SCW DOORS	WILSONART	"EVENING TIGRIS"	4674-60	-	-
BLINDS	LEVELOR - RIVIERA ONE, I-INCH HORIZONTAL BLIND WITH TILT WAND AND CORD LIFT CONTROL: COLOR #00031 SATIN NICKEL					
SIGNS	HANDICAP TOILET ROOM SIGNAGE TO MEET TAS REQUIREMENT, REFER 11/G002					

FINISH MATERIAL SCHEDULE1
NTS
07

SIM: NO WALL SHELVING AT SIMILAR CONDITIONS IN AREA TECH RM.

SIM2: BASE UNIT 02/A802 AT COPY RM 07

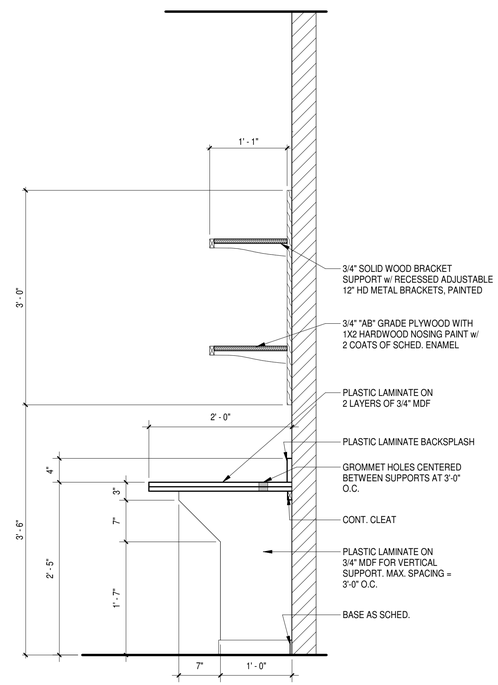

NOTE:
1. CONSTRUCT PER AWI PREMIUM GRADE STANDARDS.
2. ALL EXPOSED EDGES SHALL BE FINISHED.
3. REFER TO ELEV. & FIN. SCHED. FOR PLAM SPECS.
4. THERE ARE NO DRAWERS & DOORS.

WORKROOM COUNTERTOP & SHELVING
1" = 1'-0"
06

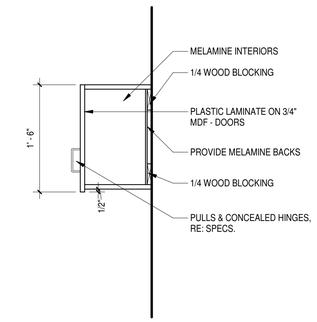

NOTES:
1. CONSTRUCT PER AWI PREMIUM GRADE STANDARDS
2. ALL EXPOSED EDGES SHALL BE FINISHED
3. REFER TO INTERIOR ELEVATIONS FOR WIDTHS
4. REFER TO FINISH SCHEDULES FOR FINISHES

MILLWORK 18" UPPER CABINET
1" = 1'-0"
10

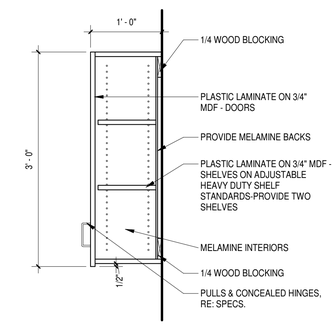

NOTES:
1. CONSTRUCT PER AWI PREMIUM GRADE STANDARDS
2. ALL EXPOSED EDGES SHALL BE FINISHED
3. REFER TO INTERIOR ELEVATIONS FOR WIDTHS
4. REFER TO FINISH SCHEDULES FOR FINISHES

MILLWORK UPPER CABINET
1" = 1'-0"
05

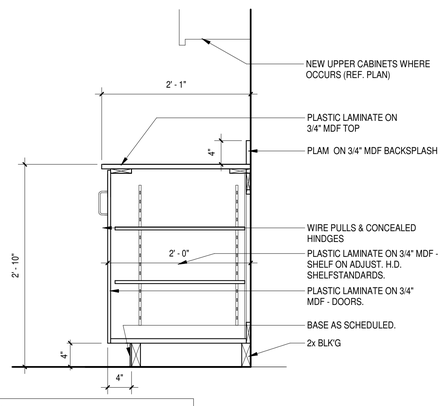

NOTES:
1. CONSTRUCT PER AWI PREMIUM GRADE STANDARDS
2. ALL EXPOSED EDGES SHALL BE FINISHED
3. REFER TO INTERIOR ELEVATIONS FOR WIDTHS
4. REFER TO FINISH SCHEDULES FOR FINISHES

BASE CABINET AT COPY ROOMS
1" = 1'-0"
04

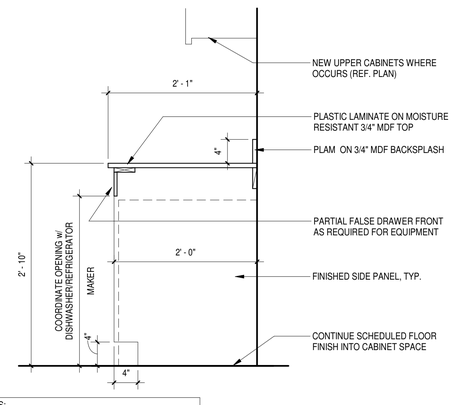

NOTES:
1. CONSTRUCT PER AWI PREMIUM GRADE STANDARDS
2. ALL EXPOSED EDGES SHALL BE FINISHED
3. REFER TO INTERIOR ELEVATIONS FOR WIDTHS
4. REFER TO FINISH SCHEDULES FOR FINISHES

DISHWASHER/REFRIGERATOR CABINET SECTION
1" = 1'-0"
03

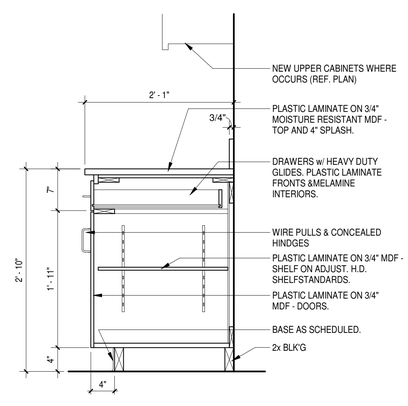

NOTES:
1. CONSTRUCT PER AWI PREMIUM GRADE STANDARDS
2. ALL EXPOSED EDGES SHALL BE FINISHED
3. REFER TO INTERIOR ELEVATIONS FOR WIDTHS
4. REFER TO FINISH SCHEDULES FOR FINISHES

BASE CABINET SECTION
1" = 1'-0"
02

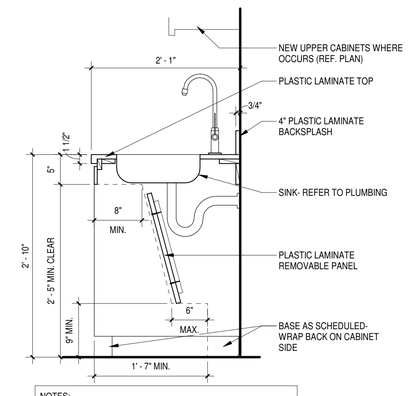

NOTES:
1. CONSTRUCT PER AWI PREMIUM GRADE STANDARDS
2. ALL EXPOSED EDGES SHALL BE FINISHED
3. REFER TO INTERIOR ELEVATIONS FOR WIDTHS
4. REFER TO FINISH SCHEDULES FOR FINISHES

ADA MILLWORK SINK CABINET
1" = 1'-0"
01

TEXAS PARKS & WILDLIFE

REGISTERED ARCHITECT JOE W. MAHLER 09601 STATE OF TEXAS
04/23/2021

PDG ARCHITECTS
10000 RICHMOND
SUITE 100
HOUSTON, TX 77042
713-629-6100

MATHIS FISHERIES OFFICE
AT LAKE CORPUS CHRISTI, MATHIS, TEXAS
PROJECT NUMBER: 127144

DATE: 04-23-2021
DESIGNED BY:
DRAWN BY:
REVIEWED BY:
REVISED:
REVISED:

SHEET TITLE
FINISH SCHEDULES & MILLWORK DETAILS

SHEET NUMBER
A901

PERCENTAGE: BID SET

STRUCTURAL ABBREVIATIONS

AASHTO	AMERICAN ASSOCIATION OF STATE HIGHWAY AND TRANSPORTATION OFFICIALS	ELEC	ELECTRICAL	PLF	POUNDS PER LINEAR FOOT
		ELEV	ELEVATOR	PLUMB	PLUMBING
ACI	AMERICAN CONCRETE INSTITUTE	EQ	EQUAL(LY)	PROJ	PROJECTION
		EW	EACH WAY	PSI	POUNDS PER SQUARE INCH
ADDL	ADDITIONAL	EXIST	EXIST	PSF	POUNDS PER SQUARE FOOT
ADJ	ADJACENT	EXP	EXPANSION	R	RIGHT, RISER, RADIUS
AISC	AMERICAN INSTITUTE OF STEEL CONSTRUCTION	FD	FLOOR DRAIN	RD	ROOF DRAIN
		F.F.E.	FINISH FLOOR ELEVATION	RE	REFER
AISI	AMERICAN IRON AND STEEL INSTITUTE	FND	FOUNDATION	REF	REFERENCE
		FS	FAR SIDE	REINF	REINFORCEMENT (D), (ING), (MENT)
ANSI	AMERICAN NATIONAL STANDARD INSTITUTE	FT	FEET, FOOT	REQD	REQUIRED
		FTG	FOOTING	REV	REVISION
APPROX	APPROXIMATE(LY)	GA	GAUGE	RH	RIGHT HAND
AR	ANCHOR ROD	GALV	GALVANIZED	RO	ROUGH OPENING
ARCH	ARCHITECTURAL	GB	GRADE BEAM	S	SOUTH, SLAB
ASCE	AMERICAN SOCIETY OF CIVIL ENGINEERS	HORIZ	HORIZONTAL	SCHED	SCHEDULE(D)
		HP	HIGH POINT	SDI	STEEL DECK INSTITUTE
ASTM	AMERICAN SOCIETY OF TESTING MATERIALS	HR	HOUR	SECT	SECTION
		HSS	HOLLOW STRUCTURAL SECTION	SF	SQUARE FEET
AWS	AMERICAN WELDING SOCIETY	ID	INSIDE DIAMETER	SHT	SHEET
BM	BEAM (MILD REINFORCE)	IN	INCHES	SIM	SIMILAR
BC	BOTTOM CHORD	JT	JOINT	SJI	STEEL JOIST INSTITUTE
BLDG	BUILDING	K	KIPS, JOIST SERIES	SL	SLOPE
BOD	BOTTOM OF DECK	KB	KNEE BRACE	SPA	SPACE
BOT	BOTTOM	L	SPAN, LEFT, STEEL ANGLE	SPEC(S)	SPECIFICATION(S)
BT	BASE PLATE	Ld	DEVELOPMENT LENGTH	SQ	SQUARE
BRG	BEARING	LG	LENGTH, LONG	STD	STANDARD
BPL	BENT PLATE			STIF	STIFFENER
BS	BOTH SIDES	LH	LEFT HAND	STIR	STIRRUP
C	CHANNEL, COMPRESSION	LL	LIVE LOAD	STL	STEEL
CAMB	CAMBER	LLBB	LONG LEG BACK TO BACK	STR	STRUCTURAL
CIP	CAST IN PLACE	LLH	LONG LEG HORIZONTAL	T	TOP, TENSION
CL	CENTER LINE	LLV	LONG LEG VERTICAL	T & B	TOP & BOTTOM
CLR	CLEAR	LP	LOW POINT	T & G	TONGUE AND GROOVE
COL	COLUMN	LW	LONG WAY	TEMP	TEMPERATURE
CONC	CONCRETE	MATL	MATERIAL	THK	THICK(NESS)
CONT	CONTINUOUS	MAX	MAXIMUM	TOC	TOP OF CONCRETE
CPL	CAP PLATE	MC	MOMENT CONNECTION, MISC CHANNEL	TOF	TOP OF FOOTING
CS	CARBON STEEL			TOL	TOP OF LEDGE
CSJ	CONSTRUCTION JOINT	MECH	MECHANICAL	TOP	TOP OF PANEL
CTJ	CONTROL JOINT	MFG(S)	MANUFACTURER(S)	TOS	TOP OF STEEL
D	DEPTH	MID	MIDDLE	TOT	TOTAL
DET	DETAIL	MISC	MISCELLANEOUS	TOW	TOP OF WALL
DF	DRILLED FOOTING	ML	MATCH LINE	TRD(S)	TREAD(S)
DIA	DIAMETER	MO	MASONRY OPENING	TOJ	TOP OF JOIST
DIAG	DIAGONAL	MS	MILD STEEL	TYP	TYPICAL
DIM	DIMENSION	MT	STRUCTURAL TEE CUT FROM MISC STL	UL	UNDERWRITERS LABORATORY
DL	DEAD LOAD	N	NORTH	UNF	UNIFORM
DN	DOWN	NIC	NOT IN CONTRACT	UON	UNLESS OTHERWISE NOTED
DO	DITTO	NO.	NUMBER	V	BEAM END SHEAR
DWG	DRAWING	NOM	NOMINAL	VB	VERTICAL BRACE
DWL	DOWEL	NTS	NOT TO SCALE	VERT	VERTICAL
E	EAST	OC	ON CENTER	W	WALL, EST, WIDTH, WIDE FLANGE
EA	EACH	OD	OUTSIDE DIAMETER	W/	WITH
EF	EACH FACE	OPNG	OPENING	WL	WIND LOAD, WATER LEVEL, WORKING LINE
EJ	EXPANSION JOINT	OPP	OPPOSITE		
EL	ELEVATION	PL	PLATE	WP	WATER PROOF, WORKING POINT

GENERAL NOTES FOR CONSTRUCTION

A. THESE NOTES APPLY TO STRUCTURAL DOCUMENTS SEALED BY THE STRUCTURAL ENGINEER AND ARE INTENDED TO BE COMPLIMENTARY TO AND USED IN CONJUNCTION WITH THE PLANS AND SPECIFICATIONS, INCLUDING THOSE PREPARED BY OTHER DISCIPLINES. CONTRACTOR SHALL REPORT ANY DISCREPANCIES TO THE ARCHITECT/ENGINEER IMMEDIATELY. ANY SUCH DISCREPANCIES SHALL BE RESOLVED TO THE MORE STRINGENT REQUIREMENTS, UNLESS OTHERWISE AUTHORIZED BY ARCHITECT/ENGINEER.

B. IT IS THE INTENT OF THE STRUCTURAL DOCUMENTS TO DESCRIBE A FUNCTIONALLY COMPLETE STRUCTURAL PROJECT. ALL LABOR, DOCUMENTATION, SERVICES, MATERIALS, OR EQUIPMENT THAT MAY BE REASONABLY INFERRED FROM THESE DOCUMENTS OR FROM PREVAILING CUSTOM OR TRADE USAGE AS BEING REQUIRED TO PRODUCE THE INTENDED RESULT, WHETHER OR NOT SPECIFICALLY CALLED FOR, SHALL BE PROVIDED AT NO ADDITIONAL COST TO OWNER.

C. ANY DISCREPANCIES ON THE STRUCTURAL DOCUMENTS SHALL BE IMMEDIATELY BROUGHT TO THE ATTENTION OF THE ARCHITECT/STRUCTURAL ENGINEER PRIOR TO SUBMISSION OF BIDS OR PROPOSALS, OR IF NOT REASONABLY DISCERNABLE DURING PREPARATION OF BIDS AND PROPOSALS, BEFORE COMMENCING THE WORK IN QUESTION. NO FIELD CHANGES OR DEVIATIONS FROM DESIGN ARE TO BE MADE WITHOUT PRIOR APPROVAL OF THE ARCHITECT AND THE STRUCTURAL ENGINEER. NO CHANGE ORDER CONSIDERATION WILL BE GIVEN TO CHANGES FOR WHICH THE ARCHITECT AND STRUCTURAL ENGINEER WERE NOT CONTACTED PRIOR TO CONSTRUCTION OF THE AFFECTED ITEM.

D. ANY DEVIATION FROM, ADDITION TO, SUBSTITUTION FROM, OR MODIFICATION TO THE STRUCTURE OR ANY PART OF THE STRUCTURE DESCRIBED IN THESE DOCUMENTS SHALL BE SUBMITTED IN WRITING TO THE ARCHITECT/ENGINEER FOR REVIEW.

E. THE STRUCTURAL DRAWINGS AND SPECIFICATIONS REPRESENT THE FINISHED STRUCTURE. THEY DO NOT INDICATE THE MEANS AND METHODS OF CONSTRUCTION UNLESS SO STATED OR NOTED. THE CONTRACTOR SHALL BE SOLELY RESPONSIBLE TO INITIATE, MAINTAIN, AND SUPERVISE ALL SAFETY PROGRAMS AND PRECAUTIONS IN CONNECTION WITH THE WORK, AND SHALL PROVIDE ALL MEASURES NECESSARY TO PROTECT THE WORK, OTHER PROPERTY, THE WORKMEN AND OTHER PERSONS DURING DEMOLITION AND CONSTRUCTION.

F. SITE OBSERVATION VISITS, IF MADE BY ENGINEER, ARE MADE FOR THE PURPOSE OF DETERMINING, FOR THE BENEFIT OF THE OWNER, THAT THE WORK IS GENERALLY PROCEEDING IN ACCORDANCE WITH THE CONTRACT DOCUMENTS. SITE OBSERVATIONS ARE NOT INTENDED TO BE EXHAUSTIVE OR DETAILED INSPECTIONS OF CONTRACTOR'S WORK. CONTRACTOR RETAINS SOLE RESPONSIBILITY TO CONSTRUCT THE WORK IN ACCORDANCE WITH THE PLANS, SPECIFICATIONS, AND APPLICABLE REGULATIONS.

G. CONSTRUCTION MATERIALS OR EQUIPMENT SHALL NOT BE STORED OR OPERATED ON FLOORS OR ROOFS IN EXCESS OF THE DESIGN LOADS INDICATED ON THE DRAWINGS. IMPACT SHALL BE AVOIDED WHEN PLACING MATERIALS ON FLOOR OR ROOFS.

H. REFER TO WALL SECTIONS AND ELEVATIONS FOR ADDITIONAL REINFORCEMENT, INSERTS, ANCHORS, ETC. REFER TO DRAWINGS AND SPECIFICATIONS FOR WATERPROOFING, FLASHING, METAL EXPANSION JOINTS, CAULKING, SEALANTS, ETC. CONTRACTOR SHALL COMPARE THE STRUCTURAL SECTIONS WITH THE ARCHITECTURAL SECTIONS AND REPORT ANY DISCREPANCIES TO THE ARCHITECT/ENGINEER PRIOR TO COMPLETION OF THE SHOP DRAWINGS.

I. NOT ALL OPENINGS AND OTHER COMPONENTS THAT ARE REQUIRED HAVE BEEN SHOWN IN THE STRUCTURAL DRAWINGS. COORDINATE WITH THE ARCHITECTURAL, MECHANICAL, PLUMBING AND ELECTRICAL DRAWINGS AND VERIFY THE LOCATIONS AND SIZES OF ALL CHASES, INSERTS, OPENINGS, SLEEVES, FINISHES, DEPRESSIONS, PADS AND OTHER PROJECT REQUIREMENTS. FLOOR PLAN WILL BE FURNISHED FOR THAT PURPOSE.

J. THE CONTRACTOR IS RESPONSIBLE FOR REVIEWING THE MECHANICAL, ELECTRICAL, PLUMBING AND ARCHITECTURAL DRAWINGS TO DETERMINE WHERE OPENINGS ARE REQUIRED IN REINFORCED CONCRETE BEAMS, SLABS AND WALLS.

K. THE CONTRACTOR SHALL SUBMIT SHOP DRAWINGS, DETAILING ALL THE OPENINGS, INCLUDING ADDED REINFORCEMENT AS SHOWN ON THE TYPICAL WALL, SLAB AND BEAM OPENING DETAILS FOR REVIEW.

L. ADDITIONAL REINFORCEMENT ABOVE THAT SHOWN IN THE TYPICAL SLAB AND BEAM OPENING DETAILS MAY BE REQUIRED AND WILL BE REVIEWED ON THE SHOP DRAWINGS.

M. USE THE MANUFACTURER'S CERTIFIED DRAWINGS AND SPECIFICATIONS FOR THE EQUIPMENT ANCHORAGE AND DETAILS.

N. ALL CONSTRUCTION JOINTS SHOWN ON THE STRUCTURAL DRAWINGS SHALL BE INCORPORATED INTO THE STRUCTURE. ADDITIONAL CONSTRUCTION JOINTS TO FACILITATE CONSTRUCTION SHALL BE LOCATED AND DETAILED ON THE SHOP DRAWINGS FOR REVIEW.

O. HORIZONTAL CONSTRUCTION JOINTS SHALL NOT BE PERMITTED IN BEAMS UNLESS SHOWN ON THE STRUCTURAL DRAWINGS.

P. ALL CONSTRUCTION AND CONTROL JOINTS FOR BEAMS WHICH ARE EXPOSED TO VIEW ARE TO BE LOCATED TO COINCIDE WITH THE ARCHITECTURAL RUSTICATION JOINTS AS SHOWN ON THE BUILDING ELEVATION SHEETS OR AS REVIEWED IN WRITING.

Q. SHOP DRAWINGS:

1. THE TERM "SHOP DRAWINGS" INCLUDES FABRICATION, MANUFACTURING, ERECTION AND SETTING DRAWINGS, BROCHURES, CERTIFICATES, AND PRODUCT DATA DESCRIBING MATERIALS AND EQUIPMENT. SHOP DRAWINGS SHALL INCLUDE ALL PERTINENT INFORMATION REQUIRED FOR THE ENGINEER TO FULLY EVALUATE THE MATERIALS BEING REPRESENTED BY THE SUBMITTAL INCLUDING THE PHYSICAL PROPERTIES, DIMENSIONS, LOCATIONS AND METHOD OF INSTALLATION.

2. SHOP DRAWINGS WILL BEAR THE REVIEW STAMP OF THE CONTRACTOR INDICATING THAT HE HAS REVIEWED THE DRAWINGS FOR CONFORMANCE WITH THE CONTRACT DOCUMENTS; COORDINATED ITEMS INCLUDED IN THE SUBMITTAL WITH RELATED ITEMS; AND VERIFIED AND COORDINATED DIMENSIONS.

3. REPRODUCTIONS OF THE ENGINEERING DRAWINGS WILL NOT BE ACCEPTABLE AS SHOP DRAWINGS.

4. ANY SHOP DRAWING NOT CONFORMING TO THESE REQUIREMENTS WILL BE CAUSE FOR REJECTION AND WILL BE RETURNED WITHOUT ANY FURTHER ACTION.

MASONRY

A. CONSTRUCT REINFORCED MASONRY IN ACCORDANCE WITH "SPECIFICATION FOR MASONRY STRUCTURES", ACI 530.1/ASC36. MASONRY ALLOWABLE DESIGN STRESSES ARE BASED UPON REQUIRING NO SPECIAL INSPECTION.

B. ALL CONCRETE MASONRY UNITS SHALL CONFORM TO ASTM C90, GRADE N, TYPE 1 MINIMUM FACE THICKNESS SHALL BE 1.25". ALL WALLS ARE LIGHT WEIGHT BLOCKS (105 PCF OR LESS).

C. REINFORCING STEEL SHALL BE ASTM A615, GRADE 60. ALL BOLTS USED FOR ANCHORAGE SHALL BE ASTM A307 HEADED BOLTS.

D. MASONRY STRENGTH (F'M) AT 28 DAYS SHALL BE A MINIMUM OF 2,000 PSI. USE TYPE M OR S MORTAR. MASONRY UNITS SHALL HAVE A MINIMUM NET AREA COMPRESSIVE STRENGTH OF 2800 PSI. GROUT SHALL CONFORM TO ASTM C476. GROUT STRENGTH SHALL BE AT LEAST 2800 PSI.

E. PROVIDE MORTAR BED OR WEB BETWEEN GROUTED BED AND HOLLOW CELL. USE FULL HEAD AND BED JOINTS.

F. UNLESS SHOWN OTHERWISE, ALL CMU WALLS TO BE REINFORCED WITH #5 VERTICALS @ 24" OC IN FULLY GROUTED CELLS, WITH MATCHING DOWELS (MINIMUM 3'-0" LAP).

G. UNLESS SHOWN ON DETAILS, PROVIDE #9 LADDER OR TRUSS HORIZONTAL JOINT REINFORCEMENT AT 16" O.C. PROVIDE 2-#5 AT ALL JAMBS AND ENDS OF WALLS.

H. GROUT SOLID THE FIRST CELL ON EITHER SIDE OF DOOR OPENINGS, UNLESS OTHERWISE NOTED. PROVIDE 8" U-BLOCK CMU LINTEL WITH 8" BEARING EACH END; REINFORCE WITH (2) #4 BOTTOM.

I. EMBED ALL BOLTS IN FULL GROUTED CELL. PLACE BOLTS IN SAME VERTICAL CELL AS REINFORCING IF POSSIBLE. MINIMUM EMBEDDED LENGTH IS ONE-HALF WIDTH OF CELL.

J. GROUT SOLID THE FIRST CELL ON EACH LEVEL & ROOF. REINFORCE WITH HORIZONTAL AS PER DETAILS.

STRUCTURAL CONCEPT, STANDARDS AND LOADS

A. DESIGN CONCEPT:

THE STRUCTURE AS SHOWN HAS BEEN DESIGNED IN ACCORDANCE WITH THE BUILDING CODE REQUIREMENTS AND DESIGN STANDARDS TO SUPPORT THE FINAL BUILDING SERVICE LOADS. THE CONTRACTOR SHALL BE RESPONSIBLE FOR PROVIDING ADDITIONAL SUPPORTS FOR THE STRUCTURE IF NECESSITATED BY THE CONSTRUCTION SEQUENCE OR METHODS OF FABRICATION, HANDLING, ERECTION, AND OTHER CONSTRUCTION OPERATIONS.

B. BUILDING CODES AND DESIGN STANDARDS:

1. INTERNATIONAL BUILDING CODE, 2015 EDITION.

2. AMERICAN SOCIETY OF CIVIL ENGINEERS (ASCE); MINIMUM DESIGN LOADS FOR BUILDINGS AND OTHER STRUCTURES, ASCE 7-10, AS AMENDED.

3. AMERICAN CONCRETE INSTITUTE (ACI), BUILDING CODE REQUIREMENTS FOR REINFORCED CONCRETE, ACI 318, AS AMENDED.

4. AMERICAN INSTITUTE OF STEEL CONSTRUCTION (AISC), MANUAL OF STEEL CONSTRUCTION, xxTH EDITION (ASD), AS AMENDED.

5. AMERICAN WELDING SOCIETY (AWS).

6. STEEL JOIST INSTITUTE (SJI), STANDARD SPECIFICATIONS FOR OPEN WEB STEEL JOISTS AND JOIST GIRDERS.

7. STEEL DECK INSTITUTE (SDI), DESIGN MANUAL FOR COMPOSITE DECKS, FORM DECKS, ROOF DECKS, AND CELLULAR METAL FLOOR DECK WITH ELECTRICAL DISTRIBUTION.

8. AMERICAN IRON AND STEEL INSTITUTE (AISI) "SPECIFICATION FOR THE DESIGN OF COLD FORMED STEEL STRUCTURAL MEMBERS", LATEST EDITION.

C. GRAVITY LOADS:

SUPERIMPOSED LOADS ARE GIVEN IN POUNDS PER SQUARE FOOT (PSF).

BUILDING AREA	DEAD LOAD (PSF)	LIVE LOAD (PSF)
SLAB ON GRADE	0	100
ROOF	*	20

* RE PEMB NOTES

D. LATERAL DESIGN LOADS:

1. WIND LOADS FOR AN ULTIMATE WIND SPEED OF 132 MPH 3-SECOND GUST, WITH EXPOSURE C AND A RISK CATEGORY II (ASCE 7-10 METHOD)

CONCRETE

A. CONCRETE SCHEDULE:

BUILDING COMPONENT	28 DAY CYLINDER COMPRESSIVE STRENGTH POUNDS PER SQUARE INCH(PSI)					
	NORMAL WEIGHT			MAX AGGREGATE SIZE (IN)	SLUMP (IN)	W/C RATIO
	3000	3500	4000			
DRILLED PIERS	●			1 1/2"	5-7	0.55
SLAB-ON-GRADE		●		1"	4-6	0.50
GRADE BEAMS AND PLINTHS		●		1"	4-6	0.50
ALL OTHER CONCRETE	●			1"	4-6	0.52

B. PROVIDE DEFORMED NEW BILLET STEEL BARS CONFORMING TO ASTM A615, GRADE 60. ALL REINFORCING STEEL SHALL BE SECURELY HELD IN PLACE; PROVIDE ADDITIONAL BARS OR STIRRUPS FOR SUPPORT AS REQUIRED.

C. WELDED WIRE FABRIC SHALL CONSIST OF FLAT SHEETS AND SHALL CONFORM TO ASTM A185, WITH A MINIMUM YIELD STRENGTH OF 65.0 KSI

D. PROVIDE FULL EMBEDMENT WITH STANDARD 90 DEGREE HOOKS FOR ALL DOWELS. IF NOT OTHERWISE SPECIFIED, THE DOWEL SIZE AND SPACING SHALL BE THE SAME AS THE MAIN REINFORCING.

E. WHEN REINFORCING STEEL IN GRADE BEAMS, WALLS, SLABS AND BEAMS, IS NOTED AS CONTINUOUS, SPLICE REINFORCING STEEL ONLY WHEN UNAVOIDABLE DUE TO STOCK LENGTHS. STAGGER ALL SPLICES A MINIMUM OF 4'-0". ADJACENT BAR SPLICES ARE NOT ACCEPTABLE.
LOCATE THE TOP BAR SPLICES WITHIN THE MIDDLE HALF OF THE SPAN AND LOCATE THE BOTTOM BAR SPLICES AT SUPPORTS OR BETWEEN SUPPORTS AND 1/3 SPAN POINT, UNLESS NOTED OTHERWISE ON PLANS, DETAILS OR SCHEDULES.

F. PROVIDE INTERIOR AND EXTERIOR HORIZONTAL LAPPED CORNER BARS AT ALL CORNERS TO MATCH THE SIZE, TYPE AND SPACING OF THE WALL AND GRADE BEAM HORIZONTAL REINFORCING.

G. UNLESS SPECIFICALLY NOTED, SCHEDULED OR DETAILED OTHERWISE, PROVIDE DEVELOPMENT LENGTH FOR REINFORCING IN CONCRETE COMPONENTS IN ACCORDANCE WITH THE SCHEDULE IN NOTE H. BELOW. THIS SCHEDULE SHALL APPLY TO ALL DEVELOPMENT LENGTHS NOT OTHERWISE NOTED, DETAILED OR SCHEDULED IN THE DRAWINGS OR SPECIFICATIONS.

H. REINFORCING BAR DEVELOPMENT LENGTHS (Ld) IN INCHES FOR VARIOUS CONCRETE STRENGTHS IN POUNDS PER SQUARE INCH (PSI). TOP BARS ARE DEFINED AS HORIZONTAL REINFORCING SO PLACED IN A MEMBER THAT MORE THAN 12 INCHES OF CONCRETE IS CAST BELOW THE BAR. ALL OTHER CONDITIONS ARE CONSIDERED BOTTOM BARS FOR DEVELOPMENT AND SPLICE LENGTH PURPOSES.

BAR SIZE GRADE 60	Ld FOR TOP BARS				Ld FOR BOTTOM BARS			
	28 DAY CYLINDER CONCRETE STRENGTH (PSI)				28 DAY CYLINDER CONCRETE STRENGTH (PSI)			
	3000	4000	5000	6000	3000	4000	5000	6000
#3	22	19	17	16	17	15	13	12
#4	29	25	23	21	22	19	17	16
#5	36	31	28	26	28	24	22	20
#6	43	37	34	31	33	29	26	24
#7	63	54	49	45	48	42	38	34
#8	72	62	56	51	55	48	43	39
#9	81	70	62	57	62	54	48	44
#10	89	78	69	63	69	60	53	49
#11	98	85	76	70	76	66	59	54

J. PROVIDE LAP SPLICE LENGTHS FOR REINFORCING BARS 1.3 TIMES THE Ld NOTED IN NOTE H ABOVE.

1. WHEN TWO BARS OF DIFFERENT SIZES ARE LAPPED, THE SMALLER SIZE SHALL GOVERN THE LAP LENGTH UNLESS SPECIFICALLY NOTED.

2. WELDED OR MECHANICAL SPLICES CAPABLE OF DEVELOPING 125% OF THE BAR YIELD STRENGTH MAY BE USED IN LIEU OF THE LAPS. SUCH SPLICES MAY BE EITHER FULL BUTT WELDS OR SERIES "C CADWELDS OR EQUAL."

K. THE GENERAL NOTES, LAP LENGTHS OR DETAILS PERTAINING TO REINFORCING STEEL AS SHOWN ON THE DETAIL SHEETS OR OTHER SCHEDULES SHALL SUPERSEDE THE NOTES SHOWN ON THIS SHEET.

L. PROVIDE THE FOLLOWING COVER FOR CAST-IN-PLACE CONCRETE REINFORCING.

1. UNFORMED SURFACES IN CONTACT WITH EARTH: 3 INCHES

2. UNFORMED SURFACES OVER MOISTURE BARRIER: 2 INCHES

3. FORMED SURFACES EXPOSED TO EARTH OR WEATHER

a. #6 AND LARGER: 2 INCHES
b. #5 AND SMALLER: 1 1/2" INCHES

4. FORMED SURFACES NOT EXPOSED TO EARTH OR WEATHER

a. SLABS AND WALLS: 3/4 INCHES
b. BEAMS AND COLUMNS 1 1/2 INCHES

INDEPENDENT TESTING LABORATORY & SPECIAL INSPECTIONS

A. A GEOTECHNICAL EXPLORATION OF SUBSURFACE CONDITIONS, CONTAINING TEST BORINGS, LABORATORY TEST, ENGINEERING ANALYSIS AND FOUNDATION RECOMMENDATIONS, PERFORMED IS AVAILABLE FOR REVIEW. SEE "EXCAVATION, BACKFILLING & FOUNDATIONS" SECTION.

B. EMPLOYMENT OF A TESTING LABORATORY IN NO WAY RELIEVES THE CONTRACTOR OF ANY OBLIGATION TO PERFORM WORK IN ACCORDANCE WITH THE CONTRACT DOCUMENTS.

C. CONTRACTOR RESPONSIBILITIES:

1. DELIVER TO LABORATORY AT DESIGNATED LOCATION ADEQUATE SAMPLES OF MATERIALS PROPOSED TO BE USED WHICH REQUIRE TESTING, TOGETHER WITH PROPOSED MIX DESIGNS.

2. COOPERATE WITH LABORATORY PERSONNEL AND PROVIDE ACCESS TO WORK AND TO MANUFACTURER'S FACILITIES.

3. PROVIDE INCIDENTAL LABOR AND FACILITIES TO PROVIDE ACCESS TO WORK TO BE TESTED, TO OBTAIN AND HANDLE SAMPLES AT THE SITE OR AT SOURCE OF PRODUCTS TO BE TESTED, TO FACILITATE TEST AND INSPECTIONS AND FOR STORAGE AND CURING OF TEST SAMPLES.

4. NOTIFY LABORATORY OF MATERIAL SOURCES AND FURNISH NECESSARY QUANTITIES OF REPRESENTATIVE SAMPLES OF MATERIALS PROPOSED FOR USE WHICH ARE REQUIRED TO BE TESTED.

5. NOTIFY ARCHITECT AND LABORATORY 24 HOURS PRIOR TO EXPECTED TIME FOR OPERATIONS REQUIRING INSPECTION AND TESTING SERVICES.

6. ADVISE LABORATORY IN A TIMELY FASHION TO COMPLETE REQUIRED INSPECTION AND TESTING PRIOR TO SUBSEQUENT WORK BEING PERFORMED.

7. PAY FOR ALL SUBSEQUENT RE-TESTING OF PRODUCTS OR SYSTEMS FOUND TO BE DEFECTIVE OR OTHERWISE NOT IN ACCORDANCE WITH SPECIFICATION REQUIREMENTS. REMOVE REJECTED PRODUCTS AND REPLACE WITH PRODUCTS OF SPECIFIED QUALITY.

D. SPECIAL INSTRUCTIONS:

1. THE OWNER SHALL EMPLOY ONE OR MORE SPECIAL INSPECTOR(S) TO PROVIDE INSPECTIONS DURING CONSTRUCTION ON THE TYPES OF CONSTRUCTION LISTED IN THIS SECTIONS. THE SPECIAL INSPECTOR SHALL BE A QUALIFIED PERSON WHO SHALL DEMONSTRATE COMPETENCE TO THE INSPECTIONS BEING PERFORMED TO THE SATISFACTION OF THE ENGINEER OF RECORD AND THE BUILDING OFFICIAL. THE SPECIAL INSPECTOR SHALL HAVE EXPERIENCE WITH AT LEAST FIVE OTHER PROJECTS SIMILAR IN NATURE.

2. THE PURPOSE OF THE INSPECTIONS SHALL BE TO ENFORCE COMPLIANCE WITH THE CONSTRUCTION DRAWINGS, SPECIFICATIONS, GEOTECHNICAL REPORT AND THE 2015 INTERNATIONAL BUILDING CODE (IBC), SECTION 1704.

3. THE FOLLOWING ITEMS REQUIRE INDIVIDUAL TESTS & INSPECTIONS BY THE SPECIAL INSPECTOR AS OUTLINED IN CHAPTER 17 OF THE IBC.

A. SOIL COMPACTION TESTS

B. DRILLED PIER/SPREAD FOOTING BEARING STRATA CONFIRMATION, INSPECTION AND TESTS

C. CONCRETE COMPRESSIVE STRENGTH TESTS

D. CONCRETE SLUMP TESTS

E. CONCRETE AIR CONTENT TESTS

F. STRUCTURAL STEEL FIELD WELD INSPECTION AND TESTS. INSPECT AND TEST 100% OF FULL PENETRATION WELDS.

G. STRUCTURAL STEEL BOLTED AND HIGH STRENGTH BOLTED CONNECTION INSPECTION AND TESTS

H. STEEL JOIST FIELD WELD INSPECTION

I. STEEL DECK FIELD WELD AND ATTACHMENT INSPECTION

NOTES:

1. PROVIDE A SET OF 4 TEST SAMPLES FOR EVERY 75 CY OF BUT NOT LESS THAN 1 TEST SAMPLE FOR EVERY 5,000 SF OF SLAB OR WALL SURFACE AREA. MONITOR SLUMP AND AIR CONTENT OF CONC. AND NOTIFY DELIVERY DRIVER IF SLUMP DEVIATES MORE THAN 1" FROM SPEC'D VALUE.

2. ALL DRILLED AND EPOXIED ANCHORS (REBAR, BOLTS, THREADED RODS ETC.) SHALL BE PULL TESTED TO 110% FOR NO LESS THAN 3 MIN.

3. ADDITIONAL TESTS AT THE CONTRACTOR'S EXPENSE WILL BE PERFORMED TO DETERMINE COMPLIANCE OF REPLACED OR ADDITIONAL WORK WITH SPECIFIED REQUIREMENTS.

4. CORRECT DEFICIENCIES IN WORK THAT TEST REPORTS AND INSPECTIONS INDICATE DO NOT COMPLY WITH THE CONTRACT DOCUMENTS.

5. PROVIDE THE ENGINEER OF RECORD (EOR) COPIES OF ALL SPECIAL INSPECTIONS SO A SPECIAL INSPECTIONS REPORT CAN BE PREPARED FOR OBTAINING A CERTIFICATE OF OCCUPANCY.

EXCAVATION, BACKFILLING & FOUNDATIONS

A. A GEOTECHNICAL EXPLORATION OF SUBSURFACE CONDITIONS, CONTAINING TEST BORINGS, LABORATORY TEST, ENGINEERING ANALYSIS AND FOUNDATION RECOMMENDATIONS, PERFORMED BY ARM SOIL TESTING, LLC. DATED DECEMBER 17, 2020 REPORT NO. G20-612 IS AVAILABLE FOR REVIEW.

B. MAINTAIN PROPER SITE DRAINAGE DURING CONSTRUCTION SO THAT PONDING OF WATER DOES NOT OCCUR IN THE BUILDING AREA.

C. SUB-GRADE PREPARATION:

1. PERFORM DEMOLITION OF EXISTING STRUCTURES AS REQUIRED BY THE SOIL REPORT. THE ENTIRE VOLUME OF THE EXCAVATIONS CREATED BY DEMOLITION AND REMOVAL OF EXISTING STRUCTURES SHOULD BE BACKFILLED WITH ENGINEERED (SELECT) FILL THAT IS PROPERLY PLACED AND COMPACTED.

2. EXCAVATE EXISTING SOILS AS REQUIRED TO REMOVE ALL EXISTING VEGETATION ROOTS & DELETERIOUS MATERIALS FROM THE PROPOSED BUILDING AREA; & AS REQUIRED BY SOIL REPORT. THE CLEARING SHOULD EXTEND BEYOND THE BUILDING EDGE AS NOTED IN THE SOILS REPORT. ONCE ROUGH GRADE IS ESTABLISHED, THE EXPOSED SURFACE SHOULD BE PROOF-ROLLED IN ACCORDANCE WITH TxDOT ITEM 216 (1993). ANY SOFT POCKETS OF SOFT OR WEAK SOILS ENCOUNTERED SHOULD BE REMOVED. BUILD BUILDING PAD AS REQUIRED BY SOIL REPORT. REFER TO SOIL REPORT FOR SITE SOILS PREPARATION REQUIREMENT UNDER THE BUILDING SLAB.

3. A MINIMUM OF FOUR AND A HALF (4.5) FEET OF SELECT FILL IS REQUIRED UNDER THE BUILDING SLAB AND SHALL EXTEND BEYOND THE BUILDING PERIMETER AS REQUIRED BY THE SOIL REPORT.

4. THE MATERIAL USED TO CONSTRUCT THE BUILDING PAD SHOULD CONSIST OF A SELECT NON-ACTIVE, INORGANIC SANDY CLAY TYPE SOIL HAVING A PLASTICITY INDEX (P.I.) BETWEEN 10 AND 20. SELECT FILL MATERIAL SHOULD BE PLACED UNDER LABORATORY CONTROL. IN NO GREATER THAN EIGHT (8) INCH LOOSE LAYERS, AND COMPACTED TO 95% OF STANDARD PROCTOR DENSITY AS DETERMINED BY ASTM D-698 PROCEDURE, AT OPTIMUM MOISTURE CONTENT (0 TO +3%).

D. FOUNDATIONS HAVE BEEN DESIGNED FOR AN ALLOWABLE BEARING PRESSURE OF 3,200 PSF FOR DEAD PLUS SUSTAINED LOAD AND 4,800 PSF FOR TOTAL LOADS AT A MINIMUM EMBEDMENT DEPTH OF 12 FEET BELOW EXISTING GRADE ELEVATION

E. REFER TO THE GEOTECHNICAL EXPLORATION FOR ADDITIONAL INFORMATION.

F. INSTALL SLAB ON GRADE OVER 15 MIL VAPOR BARRIER

Dally + ASSOCIATES
STRUCTURAL | CIVIL

9800 Richmond Avenue, Suite 460
Houston, Texas 77042
t 713 337 8881
Texas Registered Engineering Firm
F-003426

PROJECT: 20-296-00

TEXAS PARKS & WILDLIFE

STATE OF TEXAS
FRED DALLY
90904
LICENSED
PROFESSIONAL ENGINEER
04-23-2021

PDG ARCHITECTS
10000 RICHMOND
SUITE 100
HOUSTON, TX 77042
713-629-6100

MATHIS FISHERIES OFFICE
AT LAKE CORPUS CHRISTI, MATHIS, TEXAS
PROJECT NUMBER: 127144

DATE: 04/23/2021
DESIGNED BY:
DRAWN BY: QT
REVIEWED BY: LM
REVISED:
REVISED:

SHEET TITLE
STRUCTURAL GENERAL CRITERIA

SHEET NUMBER
S101

PERCENTAGE: TPWD DD REVIEW 12-04-20 PACKAGE

METAL BUILDING SYSTEM LOADS

A. PROVIDE METAL BUILDING SYSTEM CAPABLE OF WITHSTANDING THE EFFECTS OF GRAVITY LOADS AND THE FOLLOWING LOADS AND CONDITIONS INDICATED.

B. ENGINEER METAL BUILDING SYSTEMS ACCORDING TO PROCEDURES IN THE METAL BUILDING MANUFACTURER'S ASSOCIATION (MBMA), METAL BUILDING SYSTEMS MANUAL.

1. DESIGN LOADS AS NOTED IN "STRUCTURAL CONCEPT, STANDARDS AND LOADS".
2. ROOF LIVE LOAD: 20 PSF (REDUCIBLE)
3. WIND LOADS AS SPECIFIED IN "STRUCTURAL CONCEPT, STANDARDS AND LOADS".
4. COLLATERAL LOADS: INCLUDE ADDITIONAL DEAD LOAD FOR SUSPENDED BUILDING SYSTEMS: 3 PSF MINIMUM WHEN NOT SUPPORTING CEILING. USE 6 PSF WHEN SUPPORTING CEILING BUT NO FIRE SPRINKLER SYSTEM. USE 10 PSF WHEN SUPPORTING CEILING AND FIRE SPRINKLER SYSTEM.

5. DEFLECTION CRITERIA:

MAIN FRAMES LATERAL (DRIFT):

- METAL PANEL FINISH	*H/100*
- PLASTER/STUCCO FINISH	*H/360*
- BRICK FINISH	*H/400*

MAIN FRAMES VERTICAL:

- NOT SUPPORTING CEILING	*L/180*
- SUPPORTING NON PLASTER CEILING	*L/240*
- SUPPORTING PLASTER/STUCCO FINISH	*L/360*

BEARING FRAME RAFTER:

- NOT SUPPORTING CEILING	*L/180*
- SUPPORTING NON PLASTER CEILING	*L/240*
- SUPPORTING PLASTER/STUCCO FINISH	*L/360*

ENDWALL COLUMNS:

- METAL PANEL FINISH	*L/120*
- PLASTER/STUCCO FINISH	*L/360*
- BRICK FINISH	*L/600*

ROOF PANELS:	*L/120*
WALL PANELS:	*L/60*

PURLINS:

- NOT SUPPORTING CEILING	*L/180*
- SUPPORTING NON PLASTER CEILING	*L/240*
- SUPPORTING PLASTER/STUCCO FINISH	*L/360*

GIRTS: LATERAL

- METAL PANEL FINISH	*L/120*
- PLASTER/STUCCO FINISH/THIN SET BRICK	*L/360*
- BRICK FINISH	*L/600*

CRANE SUPPORTING COLUMNS(DRIFT) :	H/100*
RAIL BEAMS VERTICAL:	
- CLASS A,B,C CRANES	L/600*
- CLASS D CRANES	L/800*
- CLASS E AND F CRANES	L/1000*
RAIL BEAM LATERAL:	L/400*

* MINIMUM OR HIGHER IF REQUIRED BY CRANE MANUFACTURER, G.C./PEMB MANUFACTURER TO COORDINATE WITH OWNER AND CRANE MANUFACTURER.

BRICK LINTEL VERTICAL AND LATERAL	L/600

TEXAS PARKS & WILDLIFE

STATE OF TEXAS
FRED DALLY
90904
LICENSED
PROFESSIONAL ENGINEER
04-23-2021

PDG ARCHITECTS

10000 RICHMOND
SUITE 100
HOUSTON, TX 77042
713-629-6100

MATHIS FISHERIES OFFICE
AT LAKE CORPUS CHRISTI, MATHIS, TEXAS
PROJECT NUMBER: 127144

DATE: 04/23/2021
DESIGNED BY:
DRAWN BY: QT
REVIEWED BY: LM
REVISED:
REVISED:

Dally + ASSOCIATES
STRUCTURAL | CIVIL

9800 Richmond Avenue, Suite 460
Houston, Texas 77042
t 713 337 8881
Texas Registered Engineering Firm
F-003426

PROJECT: 20-296-00

SHEET TITLE
STRUCTURAL GENERAL CRITERIA

SHEET NUMBER
S102

PERCENTAGE: TPWD DD REVIEW 12-04-20 PACKAGE

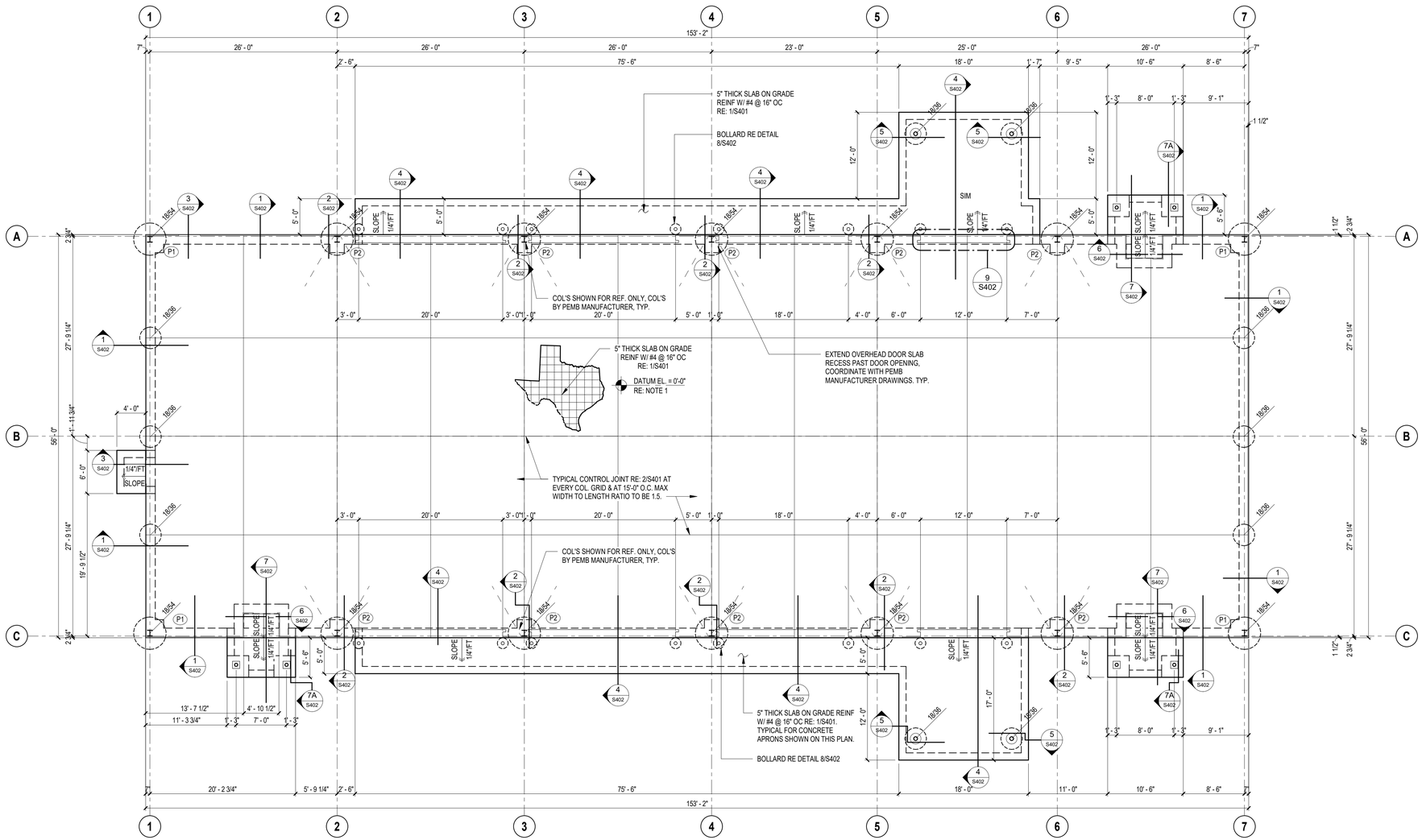

1 **FOUNDATION PLAN**
1/8" = 1'-0"

NOTE:

FOUNDATION CONSTRUCTION CANNOT BEGIN UNTIL FINAL PEMB DRAWINGS ARE REVIEWED BY STRUCTURAL ENGINEERED AND ARE COORDINATED WITH FOUNDATION DRAWINGS.

NOTE:

FOLLOW PEMB ANCHOR BOLTS LAYOUT DRAWINGS FOR LOCATION OF ANCHOR BOLTS. DO NOT USE THESE DRAWINGS TO PLACE ANCHOR BOLT LOCATION.

PLAN NOTES:

1. ALL COLUMNS ARE BY METAL BUILDING FABRICATOR U.O.N.
2. P1 INDICATES PLINTH TYPE. RE: S301 FOR PLINTH AND PIERS SCHEDULE.
3. TOP OF ALL PIERS IS AT <-2'-8"> U.O.N. ALL PIERS ARE CENTERED ON THE PLINTHS.
4. TOP OF ALL PLINTH IS AT (0'-0") U.O.N.
5. DATUM ELEVATION (0'-0") REFERS TO TRUE ELEVATION RE: CIVIL DRAWINGS. ALL ELEVATIONS ARE RELATIVE TO F.F.E. (0'-0)

Dally + ASSOCIATES
STRUCTURAL | CIVIL
9800 Richmond Avenue, Suite 460
Houston, Texas 77042
t 713 337 8881
Texas Registered Engineering Firm
F-003426

PROJECT: 20-296-00

TEXAS PARKS & WILDLIFE

FRED DALLY 90904 LICENSED STATE OF TEXAS
04-23-2021

PDG ARCHITECTS
10000 RICHMOND
SUITE 100
HOUSTON, TX 77042
713-629-6100

MATHIS FISHERIES OFFICE
AT LAKE CORPUS CHRISTI, MATHIS, TEXAS
PROJECT NUMBER: 127144

DATE: 04/23/2021
DESIGNED BY:
DRAWN BY: QT
REVIEWED BY: LM
REVISED:
REVISED:

SHEET TITLE
FOUNDATION PLAN

SHEET NUMBER
S201

PERCENTAGE: TPWD DD REVIEW 12-04-20 PACKAGE

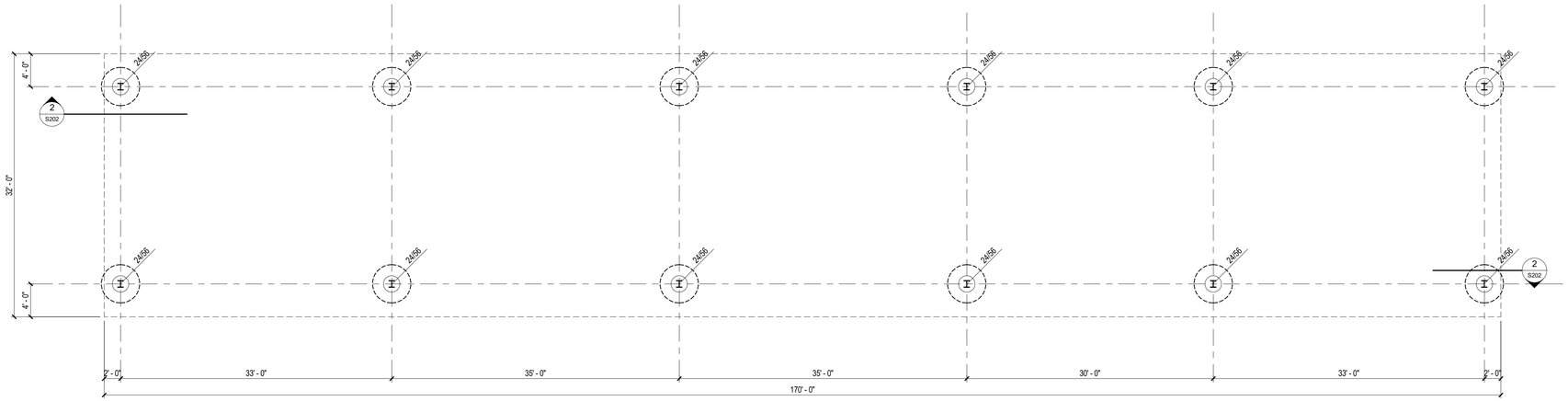

1 **CARPORT FOUNDATION PLAN**
1/8" = 1'-0"

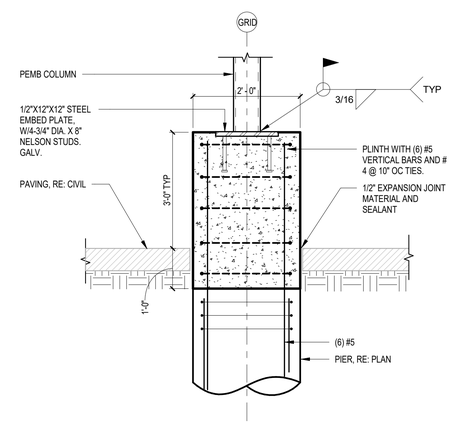

2 **CARPORT COLUMN DETAIL**
3/4" = 1'-0"

TEXAS PARKS & WILDLIFE

FRED DALLY 90904 LICENSED TEXAS

04-23-2021

PDG ARCHITECTS

10000 RICHMOND
SUITE 100
HOUSTON, TX 77042
713-629-6100

MATHIS FISHERIES OFFICE
AT LAKE CORPUS CHRISTI, MATHIS, TEXAS
PROJECT NUMBER: 127144

DATE: 04/23/2021
DESIGNED BY:
DRAWN BY: QT
REVIEWED BY: LM
REVISED:
REVISED:

SHEET TITLE
CARPORT FOUNDATION PLAN

SHEET NUMBER
S202

Dally + ASSOCIATES
STRUCTURAL | CIVIL

9800 Richmond Avenue, Suite 460
Houston, Texas 77042
t 713 337 8881
Texas Registered Engineering Firm
F-003426

PROJECT: 20-296-00

PERCENTAGE: TPWD DD REVIEW 12-04-20 PACKAGE

1 DRILLED PIEER SCHEDULE

SHAFT	VERTICAL REINFORCING		TIES		REMARKS
	NUMBER	SIZE	SIZE	SPACING (IN)	
18"Ø	6	#5	#3	10"	

2 TYPICAL DRILLED PIER (NO SCALE)

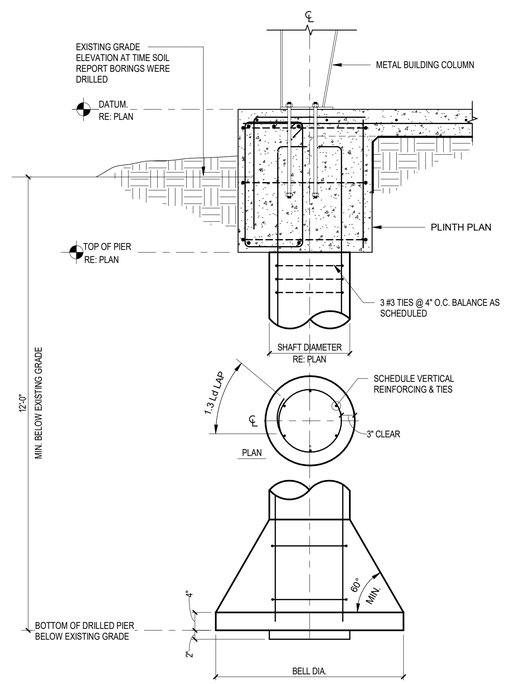

A DRILLED PIER GENERAL NOTES

1. THE INDEPENDENT TESTING LABORATORY SHALL CONFIRM THE ALLOWABLE SOIL BEARING CAPACITY IN THE FIELD AT THE ELEVATION DESIGNATED AS THE PLANE OF BEARING FOR THE DRILLED PIERS.
2. THE INDEPENDENT TESTING LABORATORY SHALL INSPECT THE BOTTOM AND SIDES OF THE DRILLED PIERS PRIOR TO PLACING REINFORCING AND CONCRETE.
3. CENTER ALL DRILLED PIERS UNDER THEIR PLINTH, UNLESS OTHERWISE NOTED.
4 UNIFORMLY DISTRIBUTE ALL SCHEDULED REINFORCEMENT.
5. DEPOSITE CONCRETE TO ITS FINAL POSITION BY THE USE OF A TREMIE NOT MORE THAN 4 HOURS AFTER BELLING AND LEANING.
6. CONSOLIDATE CONCRETE IN ITS FINAL POSITION BY VIBRATING THE TOP 5'-0".
7. G.C. TO HAVE A UNIT PRICE IN CASE OF STEEL CASING IS REQUIRED TO DRILL PIERS.

3 CONCRETE PLINTH SCHEDULE

MARK	PLINTH TYPE	REINFORCING		REMARKS
		VERTICAL	TIES	
P1		8~#7	#3 @ 12" O.C.	1
P2		8~#7	#3 @ 12" O.C.	1

B PLINTH GENERAL NOTES:

1. RE: PLAN FOR ORIENATION OF PLINTHS AND TYPE.
2. WHERE A PLINTH IS INTEGRAL WITH A BEAM, EXTEND THE HORIZONTAL REINFORCING THROUGH THE PLINTH.

C PLINTH REMARKS

1. TERMINATE ALL VERTICAL BARS WITH STANDARD 90 HOOKS AT TOP OF OF PLINTH.

4 PLINTH DETAILS

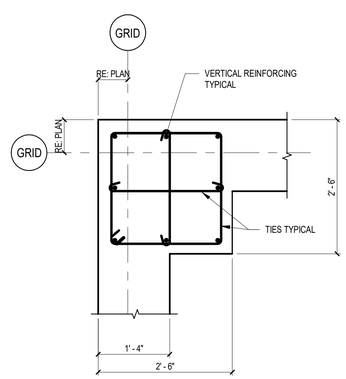

P1

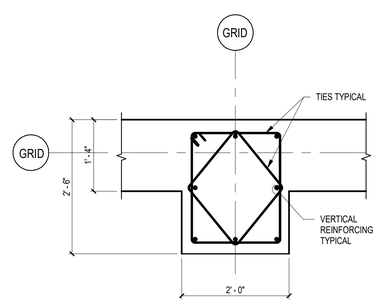

P2

TEXAS PARKS & WILDLIFE

FRED DALLY 90904 LICENSED TEXAS

04-23-2021

PDG ARCHITECTS

10000 RICHMOND
SUITE 100
HOUSTON, TX 77042
713-629-6100

MATHIS FISHERIES OFFICE
AT LAKE CORPUS CHRISTI, MATHIS, TEXAS
PROJECT NUMBER: 127144

DATE: 04/23/2021
DESIGNED BY:
DRAWN BY: QT
REVIEWED BY: LM
REVISED:
REVISED:

SHEET TITLE
TYPICAL PLINTH & DRILLED PIERS DETAILS

SHEET NUMBER
S301

PERCENTAGE: TPWD DD REVIEW 12-04-20 PACKAGE

Dally + ASSOCIATES
STRUCTURAL | CIVIL

9800 Richmond Avenue, Suite 460
Houston, Texas 77042
t 713 337 8881
Texas Registered Engineering Firm F-003426

PROJECT: 20-296-00

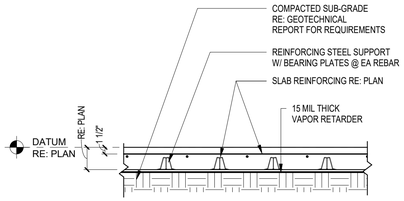

1 SLAB-ON-GRADE
3/4" = 1'-0"

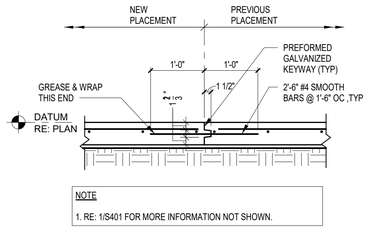

NOTE

1. RE: 1/S401 FOR MORE INFORMATION NOT SHOWN.

2 SLAB CONSTRUCTION JOINT
3/4" = 1'-0"

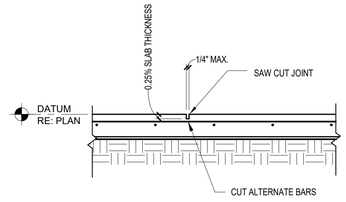

3 SLAB CONTROL JOINT
3/4" = 1'-0"

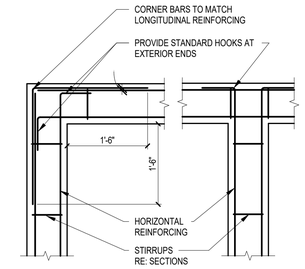

4 BEAM INTERSECTION AT WALL OR GRADE BEAM
3/4" = 1'-0"

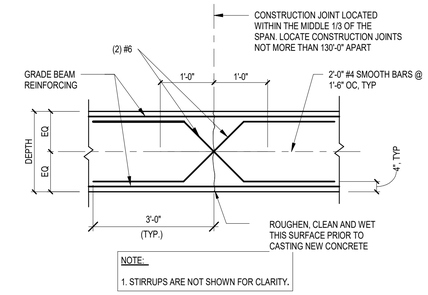

NOTE:

1. STIRRUPS ARE NOT SHOWN FOR CLARITY.

5 GRADE BEAM AT CONSTRUCTION JOINT
3/4" = 1'-0"

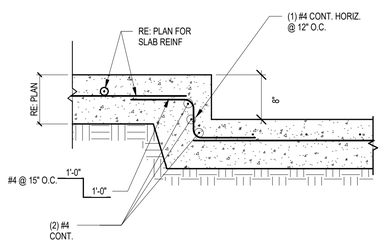

6 TYP. SLAB DEPRESSION DETAILS
3/4" = 1'-0"

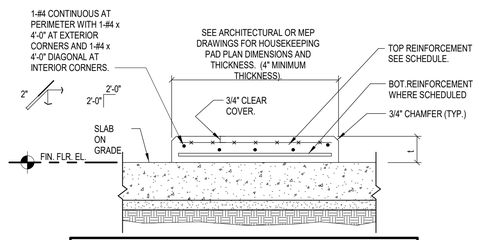

HOUSEKEEPING PAD REINFORCING SCHEDULE		
PAD THICKNESS	TOP REINFORCEMENT	BOTTOM REINF.
t <= 4"	6"x 6",W2.9 x W2.9	NONE
4" < t <= 6"	4"x 4",W4.0 x W4.0	NONE
6" < t <= 8"	4"x 4",W5.5 x W5.5	NONE
8" < t <= 12"	#4@12"EW	#3@18"EW
12" < t <= 16"	#4@12"EW	#4@12"EW

NOTES:

1. GENERAL CONTRACTOR TO COORDINATE WITH MECHANICAL DRAWINGS AND SPECIFICATIONS TO DETERMINE REQUIREMENTS FOR HOUSEKEEPING PADS OVER SLAB ON GRADE AND PROVIDE WHERE REQUIRED WHETHER SHOWN ON STRUCTURAL DRAWINGS OR NOT. COORDINATE DIMENSIONS AND OTHER SPECIAL REQUIREMENTS WITH EQUIPMENT MANUFACTURERS AS REQUIRED.

7 SECTION
3/4" = 1'-0"

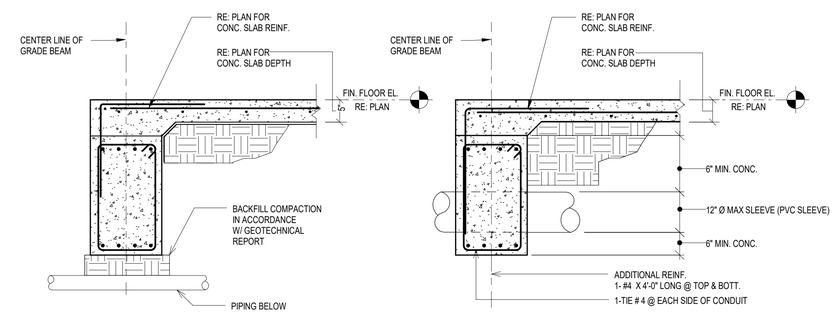

14A CONDUIT BELOW GRADE BEAM

14B CONDUIT THRU GRADE BEAM

8 SECTION
3/4" = 1'-0"

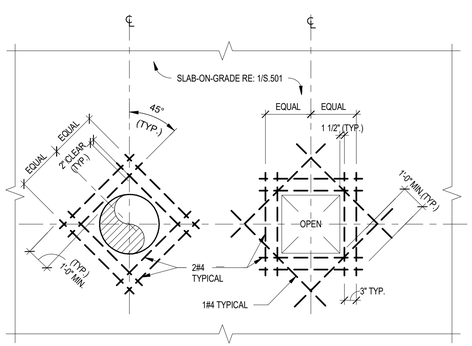

NOTE: RE: ARCHITECTURAL, PLUMBING AND ELECTRICAL DRAWINGS FOR SIZES AND LOCATIONS OF THE FLOOR PENETRATIONS.

9 SECTION
3/4" = 1'-0"

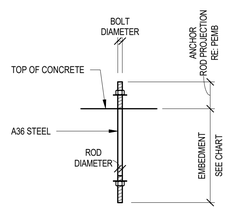

ANCHOR ROD EMBEDMENT	
ROD DIAMETER	MINIMUM EMBEDMENT
5/8"	10"
3/4"	13"
7/8"	17"
1"	21"
1 1/4"	28"
1 1/2"	35"

NOTES:

THESE ARE MINIMUM EMBEDMENTS AND ARE BASED ON A36 STEEL. LONGER EMBEDMENT LENGHTS WILL BE REQUIRED IF HIGHER STRENGTH STEEL IS SPECIFIED BY METAL BUILDING MANUFACTURER.

NOTES:

1. PROVIDE STEEL FOR BASE PLATES CONFORMING TO ASTM A36.
2. PROVIDE HOLES IN BASE PLATES 5/16" LARGER THAN THE SCHEDULED ANCHOR ROD DIAMETER.
3. PROVIDE HOLES IN SETTING PLATES 1/16" LARGER THAN THE SCHEDULED ANCHOR ROD DIAMETER.
4. PROVIDE ANCHOR RODS CONFORMING TO ASTM F1554, GRADE 36.
5. PROVIDE ANCHOR RODS WITH STANDARD WASHERS AND DOUBLE HEX NUTS.
6. USE E70XX WELDING ELECTRODES FOR ALL WELDS, UNLESS OTHERWISE NOTED.
7. MILL SURFACES NOTED FIN. (FINISHED) FOR TRUE AND FULL CONTACT.
8. RE: PEMB MANUFACTURER DRAWINGS FOR ANCHOR ROD DIAMETER.

10 TYPICAL PEMB ANCHOR ROD DETAIL
3/4" = 1'-0"

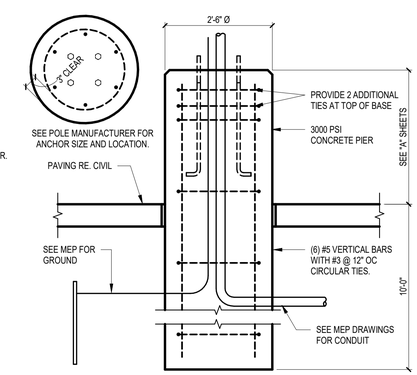

11 TYPICAL LIGHT POLE DETAIL
3/4" = 1'-0"

Dally + ASSOCIATES
STRUCTURAL | CIVIL

9800 Richmond Avenue, Suite 460
Houston, Texas 77042
t 713 337 8881

Texas Registered Engineering Firm
F-003426

PROJECT: 20-296-00

TEXAS PARKS & WILDLIFE

FRED DALLY 90904 04-23-2021

PDG ARCHITECTS
10000 RICHMOND
SUITE 100
HOUSTON, TX 77042
713-629-6100

MATHIS FISHERIES OFFICE
AT LAKE CORPUS CHRISTI, MATHIS, TEXAS
PROJECT NUMBER: 127144

DATE: 04/23/2021
DESIGNED BY:
DRAWN BY: QT
REVIEWED BY: LM
REVISED:
REVISED:

SHEET TITLE
FOUNDATION DETAILS

SHEET NUMBER
S401

PERCENTAGE: TPWD DD REVIEW 12-04-20 PACKAGE

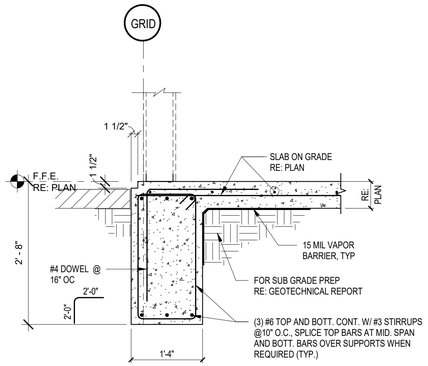

1 EXTERIOR DETAIL AT METAL PANEL
3/4" = 1'-0"

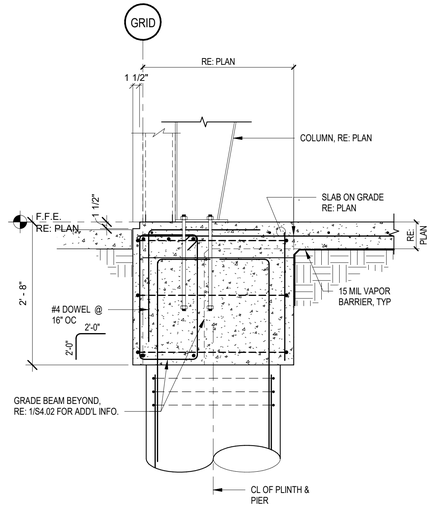

2 EXTERIOR GRADE BEAM AT COL.
3/4" = 1'-0"

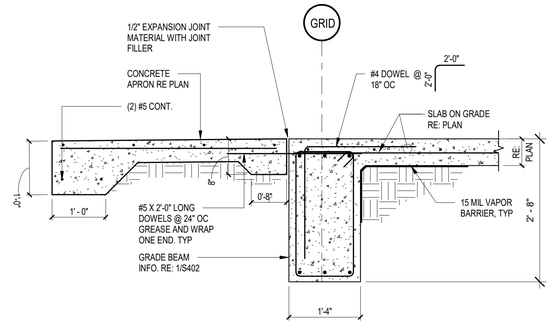

3 EXTERIOR DETAIL AT DOOR
3/4" = 1'-0"

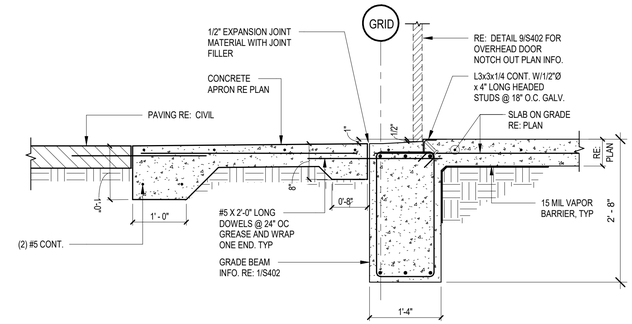

4 DETAIL AT OVER HEAD DOOR
3/4" = 1'-0"

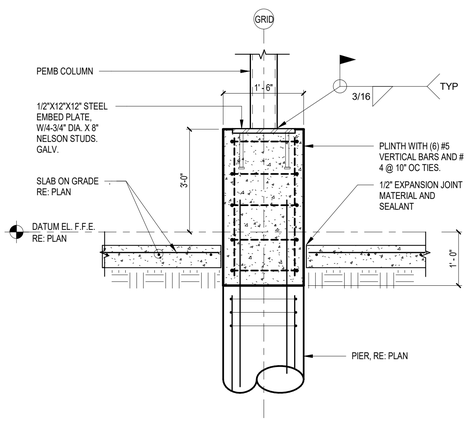

5 PLINTH & FOOTING DETAIL
3/4" = 1'-0"

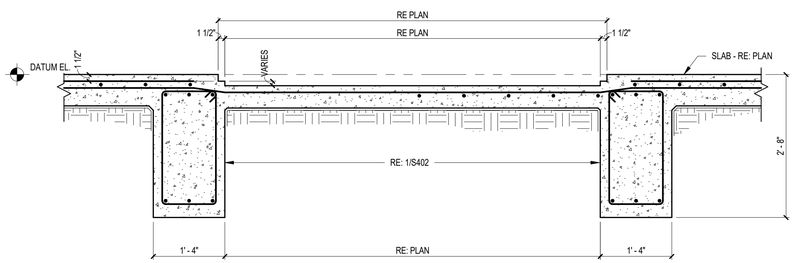

6 SECTION
3/4" = 1'-0"

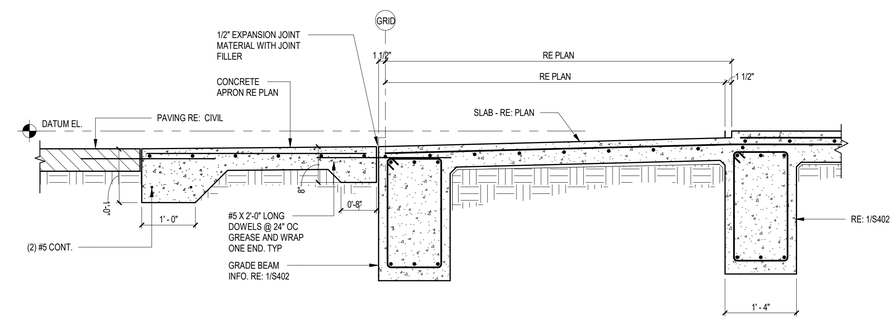

7 SECTION
3/4" = 1'-0"

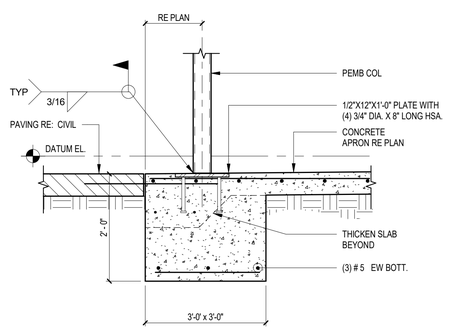

7A SECTION
3/4" = 1'-0"

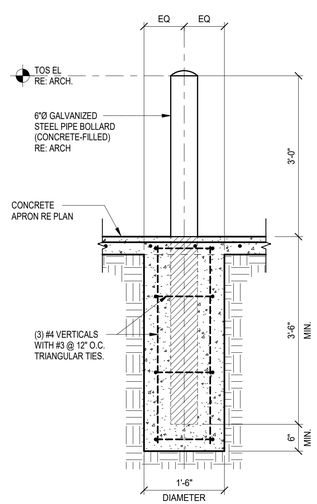

NOTES:

1. BOLLARD HAS BEEN DESIGNED AS PER SECTION 1607.8.3 TO RESIST A SINGLE LOAD OF 6,000 LBS APPLIED HORIZONTALLY IN ANY DIRECTION. LOAD IS ASSUMED TO ACT AT A MINIMUM HEIGHT OF 18 INCHES ABOVE THE FLOOR OR FINISH GRADE.
2. COORDINATE WITH ARCHITECTURAL DRAWINGS FOR LOCATION AND FREQUENCY OF BOLLARDS (4'-0" OC MAX).

8 TYPICAL BOLLARD DETAIL
3/4" = 1'-0"

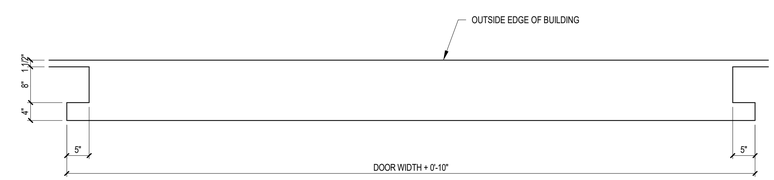

9 OVERHEAD DOOR NOTCH OUT PLAN, TYP.
3/4" = 1'-0"

TEXAS PARKS & WILDLIFE

FRED DALLY 90904 04-23-2021

PDG ARCHITECTS
10000 RICHMOND
SUITE 100
HOUSTON, TX 77042
713-629-6100

MATHIS FISHERIES OFFICE
AT LAKE CORPUS CHRISTI, MATHIS, TEXAS
PROJECT NUMBER: 127144

DATE: 04/23/2021
DESIGNED BY:
DRAWN BY: QT
REVIEWED BY: LM
REVISED:
REVISED:

SHEET TITLE
FOUNDATION DETAILS

SHEET NUMBER
S402

Dally + ASSOCIATES
STRUCTURAL | CIVIL
9800 Richmond Avenue, Suite 460
Houston, Texas 77042
t 713 337 8881
Texas Registered Engineering Firm
F-003426
PROJECT: 20-296-00

PERCENTAGE: TPWD DD REVIEW 12-04-20 PACKAGE

MECHANICAL ABBREVIATIONS

(E)	EXISTING TO REMAIN
AC	AIR CONDITIONING UNIT
AD	ACCESS DOOR
AFF	ABOVE FINISHED FLOOR
AHU	AIR HANDLING UNIT
AL	ACOUSTICAL LINING
AP	ACCESS PANEL
BDD	BACK DRAFT DAMPER
BFC	BELOW FINISHED CEILING
BHP	BRAKE HORSEPOWER
BMS	BUILDING MANAGEMENT SYSTEM
BTU	BRITISH THERMAL UNIT
CA	COMPRESSED AIR
CD	CEILING DIFFUSER
CFM	CUBIC FEET PER MINUTE
CH	CHILLER
CHP	CHILLED WATER PUMP
CHR	CHILLED WATER RETURN
CHS	CHILLED WATER SUPPLY
CO	CLEAN OUT
COND	CONDENSATE DRAIN
CP	CONDENSATE PUMP
CRAC	COMPUTER ROOM AIR CONDITIONING UNIT
CT	COOLING TOWER
CU	CONDENSING UNIT
CUH	CABINET UNIT HEATER
CWP	CONDENSER WATER PUMP
CWR	CONDENSER WATER RETURN
CWS	CONDENSER WATER SUPPLY
DB	DRY BULB
DWP	DOMESTIC WATER PUMP
DX	DIRECT EXPANSION
EAT	ENTERING AIR TEMPERATURE
EF	EXHAUST FAN
ERU	ENERGY RECOVERY UNIT
ESP	EXTERNAL STATIC PRESSURE
ET	EXPANSION TANK
EUH	ELECTRIC UNIT HEATER
EWC	ELECTRIC WATER COOLER
EWT	ENTERING WATER TEMPERATURE
FA	FREE AREA
FCU	FAN COIL UNIT
FD	FIRE DAMPER
FLA	FULL LOAD AMPS
FLR	FLOOR
FOP	FUEL OIL PUMP
FP	FIRE PUMP
FPM	FEET PER MINUTE
FPTU	FAN POWERED TERMINAL UNIT
FSD	COMBINATION FIRE AND SMOKE DAMPER
GPM	GALLONS PER MINUTE
HP	HORSEPOWER
HP	HEAT PUMP
HW	HOT WATER
HWP	HOT WATER PUMP
HWR	HEATING HOT WATER RETURN
HWS	HEATING HOT WATER SUPPLY
HX	HEAT EXCHANGER
HZ	HERTZ
ID	INSIDE DIAMETER
KW	KILOWATT
LAT	LEAVING AIR TEMPERATURE
LB	POUND
LF	LINEAR FEET
LWT	LEAVING WATER TEMPERATURE
MA	MAKE-UP AIR (OUTSIDE AIR)
MBH	THOUSAND BTU PER HOUR
MOCP	MAXIMUM OVERCURRENT PROTECTION
MOD	MOTOR OPERATED DAMPER
MTD	MOUNTED
MUA	MAKE-UP AIR UNIT
NC	NORMALLY CLOSED
NIC	NOT IN CONTRACT
NK	NECK
NO	NORMALLY OPEN
NTS	NOT TO SCALE
OA	OUTSIDE AIR
OAHU	OUTSIDE AIR HANDLING UNIT
OAT	OUTSIDE AIR TEMPERATURE
OBD	OPPOSED BLADE DAMPER
OD	OUTSIDE DIAMETER
PBD	PARALLEL BLADE DAMPER
PRV	PRESSURE REDUCING VALVE
PSI	POUNDS PER SQUARE INCH (GAUGE)
PTAC	PACKAGED TERMINAL AIR CONDITIONER
RA	RETURN AIR
RAG	RETURN AIR GRILL
RCP	REFLECTED CEILING PLAN
RF	RETURN FAN
RH	RELATIVE HUMIDITY
RHC	REHEAT COIL
RPM	REVOLUTIONS PER MINUTE
SA	SUPPLY AIR
SD	SMOKE DAMPER
SEF	SMOKE EXHAUST FAN
SF	SUPPLY FAN
SP	STATIC PRESSURE
TYP	TYPICAL
UH	UNIT HEATER
UON	UNLESS OTHERWISE NOTED
VAV	VARIABLE AIR VOLUME UNIT
VD	VOLUME DAMPER
VFD	VARIABLE FREQUENCY DRIVE
VTR	VENT THROUGH ROOF
WB	WET BULB
°F	DEGREES FAHRENHEIT

MECHANICAL LEGEND

	BUTTERFLY VALVE
	BALL VALVE
	SWING CHECK VALVE
	GATE VALVE, ANGLE
	THREE WAY CONTROL VALVE
	TWO WAY CONTROL VALVE
S	SOLENOID VALVE
	PRESSURE REDUCING VALVE (PRV)
	MANUAL AIR VENT
	BALANCING VALVE
	DIRECTION OF FLOW
	STRAINER
	STRAINER WITH BLOW OFF VALVE
	PIPE RISING UP
	PIPE DROPPING DOWN
	PIPE CAP
	CONCENTRIC REDUCER
	ECCENTRIC REDUCER
	UNION
	ANCHOR
	GUIDE
	EXPANSION JOINT
	THERMOMETER
	GAS PRESSURE REGULATOR
	STRAINER
	ELECTRICALLY TRACED PIPING
H W	EXPANSION LOOP (WxH)
	RETURN LINEAR DIFFUSER
	LINEAR DIFFUSER WITH PLENUM
	SUPPLY DIFFUSER
	FLEXIBLE DUCTWORK
	RETURN GRILLE
	EXHAUST GRILLE
	DIRECTION OF FLOW
T	THERMOSTAT
H	HUMIDISTAT
P	PRESSURE SENSOR
CT - 1-1	EQUIPMENT DESIGNATION
A SIZE (CFM)	AIR OUTLET/INLET DEVICE DESIGNATION

MECHANICAL LEGEND

	POINT OF CONNECTION (NEW TO EXISTING)
20x14	DUCT SIZE (CLEAR INSIDE DIMENSION) FIRST FIGURE INDICATES PLAN SIZE
10Ø	ROUND DUCT DIAMETER SIZE (CLEAR INSIDE DIMENSION)
	RECTANGULAR OR SQUARE TO ROUND OR OVAL TRANSITION
	ROUND EXHAUST DUCT UP
	ROUND EXHAUST DUCT DOWN
	ROUND RETURN DUCT UP
	ROUND RETURN DUCT DOWN
	ROUND SUPPLY DUCT UP
	ROUND SUPPLY DUCT DOWN
	RECTANGULAR EXHAUST DUCT UP
	RECTANGULAR EXHAUST DUCT DOWN
	RECTANGULAR RETURN DUCT UP
	RECTANGULAR RETURN DUCT DOWN
	RECTANGULAR SUPPLY DUCT UP
	RECTANGULAR SUPPLY DUCT DOWN
	VOLUME DAMPER (MANUAL)
	FLEXIBLE CONNECTION
M	MOTORIZED DAMPER
S	SMOKE DAMPER
A	FUSIBLE LINK FIRE DAMPER
M	MOTORIZED FIRE SMOKE DAMPER
BDD	BACK DRAFT DAMPER
	VANED ELBOW
	RADIUS ELBOW
	ACCESS DOOR (AD)
	BRANCH DUCT TAKE-OFF
	INTERNALLY LINED DUCT
	EXISTING TO REMAIN
	DEMOLISHED OR RELOCATED EQUIPMENT OR MATERIALS
	NEW CONSTRUCTION

MECHANICAL GENERAL NOTES

1. ALL WORK PERFORMED FOR THIS PROJECT SHALL BE IN ACCORDANCE WITH ALL APPLICABLE LOCAL, STATE AND FEDERAL BUILDING CODES, MECHANICAL CODES, ENERGY CODES AND THEIR AMENDMENTS. THE MORE STRINGENT CODE SHALL APPLY.
2. CONTRACTOR SHALL VISIT THE PROJECT SITE TO BECOME FAMILIAR WITH THE EXISTING CONDITIONS. FAILURE TO DO SO SHALL NOT RELIEVE CONTRACTOR OF RESPONSIBILITY FROM PERFORMING WORK PROPERLY.
3. CONTRACTOR IS RESPONSIBLE FOR COORDINATING ALL WORK UNDER THEIR CONTACT PRIOR TO FABRICATION, ROUGH-IN AND FINAL CONNECTION.
4. HVAC AND PIPING WORK IS SHOWN DIAGRAMMATIC IN NATURE. DRAWINGS SHOULD NOT BE SCALED. PROVIDE ALL OFFSETS AND FITTINGS REQUIRED TO FIT WITHIN AVAILABLE SPACE. COORDINATE WORK WITH STRUCTURAL, ARCHITECTURAL, PLUMBING AND ELECTRICAL PRIOR TO INSTALLATION.
5. LOCATE ALL EQUIPMENT TO ALLOW FOR SERVICE ACCESS. COORDINATE LOCATION WITH OTHER TRADES. DO NOT ALLOW ACCESS TO BE ENCROACHED UPON BY CONDUITS, PIPE AND OTHER MATERIALS.
6. PROVIDE ACCESS DOORS FOR ALL EQUIPMENT, VALVES, DAMPERS, ETC. ABOVE ALL NON-LAY-IN CEILINGS FOR MAINTENANCE AND SERVICE.
7. ALL RECTANGULAR AND ROUND DUCTWORK IS TO BE CONSTRUCTED OF GALVANIZED SHEET METAL, UNLESS NOTED OTHERWISE. ALL DUCTWORK SHALL BE CONSTRUCTED PER THE LATEST SMACNA DUCT STANDARDS.
8. ALL DUCTWORK SIZES INDICATED ARE CLEAR INSIDE DIMENSIONS. CONTRACTOR TO ALLOW FOR DUCT LINING AS REQUIRED. IF RESIZING IS REQUIRED IT SHALL BE DONE PER THE EQUAL FRICTION METHOD.
9. DUCT RUN-OUTS TO SUPPLY AIR DIFFUSERS SHALL BE THE SAME SIZE AS THE DIFFUSER NECK.
10. FOR EACH HEATING OR COOLING UNIT PROVIDE A TEMPERATURE SENSING DEVICE. LOCATE DEVICE WHERE SHOWN ON DRAWINGS AND COORDINATE LOCATION WITH ARCHITECT, OTHER WALL DEVICES AND PER ADA GUIDELINES.
11. INSTALL ALL MECHANICAL EQUIPMENT PER MANUFACTURER'S INSTRUCTIONS AND RECOMMENDATIONS. IF CONTRACTOR SUBSTITUTES EQUIPMENT AND AFTER APPROVAL BY THE ENGINEER, THE CONTRACTOR SHALL MAKE ALL NECESSARY MODIFICATIONS TO THE SYSTEM AS REQUIRED TO PROVIDE INSTALLATION AT CONTRACTORS COST.
12. CONTRACTOR TO VERIFY ALL ELECTRICAL CHARACTERISTICS OF MECHANICAL EQUIPMENT WITH ELECTRICAL DRAWINGS BEFORE EQUIPMENT RELEASE.
13. COORDINATE ALL SLEEVE, CHASE AND SLAB BLOCK-OUTS WITH EXISTING STRUCTURE. COORDINATE ACTUAL EQUIPMENT DIMENSION WITH OTHER TRADES.
14. COORDINATE CEILING DIFFUSER FRAME TYPES AND COLORS WITH ARCHITECTURAL CEILINGS.
15. FOR PIPES PASSING THROUGH FIRE RATED WALLS AND FLOORS PROVIDE WITH UL LISTED ASSEMBLIES AND MATERIALS TO OBTAIN REQUIRED FIRE RATING.
16. PROVIDE 1-1/2" ACOUSTICAL LINING ON ALL DUCTWORK WITHIN 10'-0" OF RTU/AHU. ALL OTHER DUCTWORK IS TO BE INSULATED WITH 1-1/2" FIBERGLASS WRAP/INSULATION.
17. PROVIDE ALL TRANSITION AS NECESSARY TO MAKE CONNECTION TO HVAC EQUIPMENT.
18. ALL PIPING, DUCTWORK AND EQUIPMENT SHALL BE SUPPORTED PER THE LATEST EDITION OF SMACNA.
19. PROVIDE DUCT ACCESS DOORS ON ALL MOTORIZED DAMPERS, FIRE DAMPERS, SMOKE DAMPERS, BACKDRAFT DAMPERS AND FIRE/SMOKE DAMPERS.
20. CONTRACTOR SHALL COORDINATE WITH BUILDING MANAGEMENT AND BUILDING ENGINEER FOR ALL BASE BUILDING STANDARDS, DEVICE, CONTROLS AND ALL ASSOCIATED EQUIPMENT AS REQUIRED FOR A COMPLETE INSTALLATION.
21. FLEXIBLE DUCTWORK FOR CONNECTION TO AIR DEVICES SHALL BE LIMITED TO 5'-0" IN LENGTH. FOR LONGER CONNECTIONS USE INSULATED RIGID SPIRAL ROUND DUCTWORK. SPLIT SEAM ROUND DUCTWORK IS NOT ALLOWED.
22. PROVIDE MANUAL VOLUME DAMPERS AT DUCT TAKEOFFS FROM MAINS. DAMPERS SHALL BE LOCATED IN ACCESSIBLE LOCATIONS. AVOID THE INSTALLATION OF DAMPERS AT DIFFUSERS DUE TO NOISE ISSUES.
23. A NEBB OR AABC CERTIFIED BALANCE COMPANY SHALL BE USED TO BALANCE ALL DEVICES TO CFM AND GPM AS REQUIRED ON THE DRAWINGS. PROVIDE BALANCING REPORTS OF ALL EQUIPMENT AND DEVICES TO OWNER.
24. PROVIDE SMACNA DUCT TRANSITIONS TO ALL TERMINAL UNIT INLETS AND OUTLETS FOR CONNECTION TO DUCTWORK.
25. ALL EXHAUST FAN OUTLETS SHALL BE A MINIMUM OF 10' FROM ALL BUILDING AIR INTAKES AND OPENINGS.
26. ALL EXTERIOR BUILDING PENETRATION SHALL BE SEALED WATER TIGHT. ALL INTERIOR WALL AND FLOOR PENETRATIONS FOR DUCTWORK AND PIPING SHALL BE COORDINATED WITH AND MEET THE FIRE RATING OF THE ARCHITECTURAL PLANS AND SHALL BE INSTALLED TO MEET ALL UL ASSEMBLY REQUIREMENTS.
27. PROVIDE MANUAL BALANCE DAMPERS AT EACH BRANCH DUCT TO ALL SUPPLY DIFFUSERS, EXHAUST GRILLS AND DUCTED RETURN GRILLES.
28. PROVIDE 4" CONCRETE HOUSEKEEPING PAD FOR ALL FLOOR MOUNTED AND GRADE MOUNTED EQUIPMENT, UNLESS NOTED OTHERWISE.
29. PROVIDE MOTORIZED DAMPERS ON ALL EXTERIOR BUILDING PENETRATIONS. INTERLOCK WITH RESPECTIVE FANS. DAMPER TO FAIL CLOSED, UNLESS NOTED OTHERWISE.
30. PROVIDE SMOKE DETECTOR/S ON ALL AIR HANDLING EQUIPMENT 2,000 CFM OR GREATER TO MEET ALL NFPA REQUIREMENTS. FOR AIR HANDLING EQUIPMENT 15,000 CFM OR GREATER PROVIDE MOTORIZED ISOLATION DAMPERS ON ALL INLETS AND OUTLETS OF THE UNIT TO MEET ALL NFPA REQUIREMENTS. DAMPERS TO BE INTERLOCKED WITH UNIT.

MECHANICAL SHEET LIST

SHEET NUMBER	SHEET NAME
M0.01	MECHANICAL COVER SHEET
M0.02	MECHANICAL SCHEDULES
M2.01	MECHANICAL PLAN
M2.02	MECHANICAL CEILING COORDINATION PLAN
M6.01	MECHANICAL DETAILS
M6.02	MECHANICAL DETAILS
M6.03	MECHANICAL DETAILS
M7.01	MECHANICAL CONTROLS

CODE SUMMARY

A. **APPLICABLE CODES INCLUDE BUT ARE NOT LIMITED TO:**
   1. MECHANICAL CODE: 2018 IMC, WITH AMENDMENTS
   2. BUILDING CODE: 2018 IBC, WITH AMENDMENTS
   3. COMMERCIAL ENERGY CONSERVATION CODE: ASHRAE 90.1 - 2013, 2015 IECC, WITH AMENDMENTS

B. **HVAC DESIGN CRITERIA**
   1. INDOOR TEMPERATURE: 75ºF COOLING; 73ºF HEATING
   2. OUTDOOR DESIGN CONDITIONS (MATHIS, TEXAS) PER 2013 ASHRAE FUNDAMENTALS:
      a. 96.8ºF DB, 77.6ºF WB SUMMER; 34.6ºF DB WINTER
      b. 3625 DEGREE DAYS COOLING; 826 DEGREE DAYS HEATING
      c. CLIMATE ZONE 2

C. **OUTSIDE AIR REQUIREMENTS - PER 2018 IMC**

1.	OFFICES:	0.06 CFM /SQ FT + 5 CFM/ PERSON
2.	RECEPTION:	0.06 CFM /SQ FT + 5 CFM/ PERSON
3.	CORRIDOR:	0.06 CFM /SQ FT
4.	CONFERENCE:	0.06 CFM /SQ FT + 5 CFM/ PERSON

TEXAS PARKS & WILDLIFE

STATE OF TEXAS
DEREK C. GASKAMP
124024
LICENSED PROFESSIONAL ENGINEER
04/22/2021

PDG ARCHITECTS
10000 RICHMOND
SUITE 100
HOUSTON, TX 77042
713-629-5100

MATHIS FISHERIES OFFICE
AT LAKE CORPUS CHRISTI, MATHIS, TEXAS
PROJECT NUMBER: 127144

DATE:	04-23-2021
DESIGNED BY:	TA
DRAWN BY:	TA
REVIEWED BY:	DG
REVISED:	
REVISED:	

SHEET TITLE
MECHANICAL COVER SHEET

SHEET NUMBER
M0.01

PRESTIGE ENGINEERING SERVICES
TBPE Registration Number 18865
909 NE Loop 410, Suite 818
San Antonio, Texas 78209
210.686.0444
www.InfinityMEP.com

PERCENTAGE: BID SET

ELECTRIC UNIT HEATER SCHEDULE

EQUIPMENT		LOCATION	UNIT		HEATING COIL			FAN		ELECTRICAL DATA		NOTES
TYPE	NUMBER		MANUFACTURER	MODEL	CAPACITY KW	EAT (°F)	LAT (°F)	CFM	HP	VOLTAGE	PHASE	
EUH	1	SHOP AREA	INDEECO	926U07500DA	7.5	55	89	700	1/30	208	3	1,2
EUH	2	PREP AREA	INDEECO	926U07500DA	7.5	55	89	700	1/30	208	3	1,2
EUH	3	EQUIPMENT STORAGE AREA	INDEECO	926U07500DA	7.5	55	89	700	1/30	208	3	1,2
EUH	4	EQUIPMENT STORAGE AREA	INDEECO	926U07500DA	7.5	55	89	700	1/30	208	3	1,2

NOTES:

1. PROVIDE WITH MOUNTING KIT. REFER TO MANUFACTURER RECOMMENDATIONS FOR MOUNTING HEIGHT.
2. PROVIDE WITH MANUFACTURER PROVIDED PROGRAMMABLE ELECTRIC THERMOSTAT.

DX SPLIT SYSTEM SCHEDULE (HEAT PUMP)

INDOOR UNIT												REFRIGERANT	REVERSE CYCLE HEATING			OUTDOOR UNIT								BASIS OF DESIGN			NOTES
EQUIPMENT		COOLING COIL									OPERATING WEIGHT (LBS.)					EQUIPMENT		AMBIENT TEMPERATURE	EER	ELECTRICAL INFORMATION			OPERATING WEIGHT (LBS.)	MANUFACTURER	MODEL NUMBER		
				EAT		LAT		CAPACITY																			
TYPE	NUMBER	CFM	OA CFM	DB (°F)	WB (°F)	DB (°F)	WB (°F)	SENSIBLE MBH	TOTAL MBH				CAPACITY MBH	EAT (°F)	LAT (°F)	TYPE	NUMBER			VOLTAGE	PHASE	MCA	MOCP			INDOOR UNIT	OUTDOOR UNIT	
AHU	1	1295	100	76.9	63.1	55	52.9	30	38.1	165	R410A	40.5	64	89	HP	1	96.8	12	208	1	32	40	205	LG ELECTRONICS	LVN420HV	LUU428HV	1,2,3,4
AHU	2	735	55	77.2	64.4	54.5	52.6	18.1	25.4	125	R410A	24	63.8	89	HP	2	96.8	12	208	1	20	30	130	LG ELECTRONICS	LVN241HV4	LUU249HV	1,2,3,4
AHU	3	1290	95	76.9	62.6	55	52.6	29.6	37	165	R410A	40.4	64.2	89	HP	3	96.8	12	208	1	32	40	205	LG ELECTRONICS	LVN420HV	LUU428HV	1,2,3,4
AHU	4	700	65	76.7	64.1	54.1	52.1	17.8	24.9	125	R410A	22.9	63.5	89	HP	4	96.8	12	208	1	20	30	130	LG ELECTRONICS	LVN241HV4	LUU249HV	1,2,3,4

NOTES:

1. PROVIDE WITH ELECTRICAL DISCONNECT SWITCH AND SINGLE POINT POWER CONNECTION.
2. PROVIDE WITH LOW AMBIENT KIT.
3. PROVIDE WITH 2" DISPOSABLE FILTER.
4. PROVIDE WITH AUXILIARY DRAIN PAN AND FLOAT SWITCH TO DE-ACTIVATE UNIT UPON DETECTION OF STANDING WATER.

DIFFUSER NECK SIZES

SUPPLY CFM (MIN-MAX)	RETURN CFM (MIN-MAX)	RECTANGULAR NECK SIZE (IN.)	ROUND NECK SIZE (ø)
0 - 100	0-90	6x6	6"
101 - 200	91-200	8x8	8"
201 - 400	201-300	10x10	10"
401 - 600	301-450	12x12	12"
601 - 900	451-700	14x14	14"
--	701-2000	22 x 22	--

DUCT INSULATION SCHEDULE

					CONCEALED					EXPOSED IN NON-SERVICE SPACES					EXPOSED IN SERVICE/ MECHANICAL ROOMS					NOTES
DUCT INSULATION	TYPE	MIN./ INSTALLED INSULATION VALUE	MIN. THICKNESS	MIN. NOMINAL DENSITY	SUPPLY	RETURN	EXHAUST	OUTSIDE AIR	JACKET	SUPPLY	RETURN	EXHAUST	OUTSIDE AIR	JACKET	SUPPLY	RETURN	EXHAUST	OUTSIDE AIR	JACKET	
ABOVE GROUND OUTDOOR ROUND/ FLAT-OVAL/ RECTANGULAR DUCT	MINERAL FIBER BLANKET	R-8	2	1-1/2	X	X		X	FSK	X	X		X	ALUMINUM SMOOTH 55-60 MILS THICK	X	X		X	ALUMINUM SMOOTH 55-60 MILS THICK	1
	DOUBLE WALL, INSULATED	R-8	N/A	N/A																
INDOOR ROUND/ FLAT-OVAL/ RECTANGULAR DUCT	MINERAL FIBER BLANKET	R-6	2	3/4	X	X		X	FSK						X	X		X	FSK	1
	DOUBLE WALL, INSULATED	R-6	N/A	N/A						X	X		X	NONE						2

NOTES:

1. REFER TO SPECIFICATIONS FOR ADDITONAL INSULATION REQUIREMENTS AND JACKET DETAILS.
2. AIR CONDITIONING AND REFRIGERATION PIPE AND TUBING LINES SHALL BE INSULATED WITH ACR TYPE INSULATION HAVING A THERMAL RESISTIVITY OF NOT LESS THAN R-4.

FAN SCHEDULE

EQUIPMENT		SERVICE	UNIT TYPE		CFM	EXT. S.P. (IN W.G.)	MOTOR					EMERGENCY POWER	VARIABLE SPEED	OPERATIONAL WEIGHT (LBS.)	NOTES
TYPE	NUMBER		MANUFACTURER	MODEL			RPM	BHP	HP	VOLTAGE	PHASE				
EF	1	RR EXHAUST	GREENHECK	SP-B90	80	0.15	700	0.01	0.01	120	1	NO	NO	10	1,2,3
EF	2	RR EXHAUST	GREENHECK	SP-B90	80	0.15	700	0.01	0.01	120	1	NO	NO	10	1,2,3
EF	3	IT CLOSET	GREENHECK	SP-A390-VG	225	0.5	1271	0.06	0.06	120	1	NO	NO	30	1,3,4

NOTES:

1. PROVIDE WITH FACTORY MOUNTED ELECTRICAL DISCONNECT AND EC MOTOR.
2. FAN SHALL BE CONTROLLED BY LIGHT SWITCH.
3. PROVIDE WITH CEILING MOUNTING KIT.
4. FAN SHALL BE CONTROLLED BY THERMOSTAT.

AIR DEVICE SCHEDULE

DESIGNATION	MANUFACTURER	MODEL	SERVICE	NECK DIMENSIONS	DESCRIPTION	NOTES
A	TITUS	TMS-AA	SUPPLY	PER PLANS	LOUVERED DIFFUSER	1,2,3
B	TITUS	50F	RETURN	PER PLANS	EGGCRATE RETURN GRILLE	2,3

NOTES:

1. PROVIDE WITH BALANCING DAMPER AT BRANCH TAKEOFF.
2. COORDINATE BORDER TYPE AND COLOR WITH ARCHITECT PRIOR TO PURCHASE.
3. COORDINATE EXACT SPECIFICATION WITH CLIENT.

OUTSIDE AIR CALCULATIONS PER ASHRAE 62.1- PLAN EAST OFFICE

Area Type	PZ (# People)	RP (cfm/person)	AZ (ft2)	Ra (cfm/ft2)
Office Space	7	5	717	0.06
Conference/Meeting	5	5	251	0.06
Corridors	0	0	330	0.06
Storage (Dry Materials)	0	5	212	0.06
RP = ∑Rp x Pz =		60	RA = ∑Ra x Az =	91
Vbz = RP + RA =		151	CFM	
Voz = Vbz / Ez =		151	CFM	
Zpz = Voz / Vpz =		0.0742		
D = Ps / ∑Pz =		0.725		
Vou= D x (∑Rp x Pz) + ∑Ra x Az =		134	CFM	
Vpz (primary airflow) =		2030	**System Ventilation Efficiency (2012 UMC, Table 403.5.2)**	
Ps (system population) =		12	MAX Zpz	Ev
∑ Pz = (zone population) =		16.559	≤ 0.15	1
= ∑((zone default occupant density) x (zone area))			≤ 0.25	0.9
Ev (system ventilation efficiency) =		1.0	≤ 0.35	0.8
(Table 403.5.2, 2012 UMC)			≤ 0.45	0.7
Ez (zone distribution effectiveness) =		1.0	≤ 0.55	0.6
(Table 403.2.2, 2012 UMC)			> 0.55	Use 2012 UMC, Sec. 404.0
Vot =Vou / Ev				
Vot (CFM) =			134	
		Outside air quantity, for scope indicated, must balance to minimum of 135 CFM		
		Outside air quantity, provided by AHU-1 and AHU-2: 155 CFM		

OUTSIDE AIR CALCULATIONS PER ASHRAE 62.1- PLAN WEST OFFICE

Area Type	PZ (# People)	RP (cfm/person)	AZ (ft2)	Ra (cfm/ft2)
Office Space	4	5	601	0.06
Conference/Meeting	7	5	456	0.06
Corridors	0	0	247	0.06
Breakrooms	0	5	125	0.12
Storage (Dry Materials)	0	5	70	0.06
RP = ∑Rp x Pz =		55	RA = ∑Ra x Az =	97
Vbz = RP + RA =		152	CFM	
Voz = Vbz / Ez =		152	CFM	
Zpz = Voz / Vpz =		0.0758		
D = Ps / ∑Pz =		0.342		
Vou= D x (∑Rp x Pz) + ∑Ra x Az =		116	CFM	
Vpz (primary airflow) =		2010	**System Ventilation Efficiency (2012 UMC, Table 403.5.2)**	
Ps (system population) =		11	MAX Zpz	Ev
∑ Pz = (zone population) =		32.195	≤ 0.15	1
= ∑((zone default occupant density) x (zone area))			≤ 0.25	0.9
Ev (system ventilation efficiency) =		1.0	≤ 0.35	0.8
(Table 403.5.2, 2012 UMC)			≤ 0.45	0.7
Ez (zone distribution effectiveness) =		1.0	≤ 0.55	0.6
(Table 403.2.2, 2012 UMC)			> 0.55	Use 2012 UMC, Sec. 404.0
Vot =Vou / Ev				
Vot (CFM) =			116	
		Outside air quantity, for scope indicated, must balance to minimum of 120 CFM		
		Outside air quantity, provided by AHU-3 and AHU-4: 160 CFM		

PRESTIGE ENGINEERING SERVICES
TBPE Registration Number 18865
909 NE Loop 410, Suite 818
San Antonio, Texas 78209
210.686.0444
www.InfinityMEP.com

TEXAS PARKS & WILDLIFE

STATE OF TEXAS
DEREK C. GASKAMP
124024
LICENSED PROFESSIONAL ENGINEER
04/22/2021

PDG ARCHITECTS
10000 RICHMOND
SUITE 100
HOUSTON, TX 77042
713-629-6100

MATHIS FISHERIES OFFICE
AT LAKE CORPUS CHRISTI, MATHIS, TEXAS
PROJECT NUMBER: 127144

DATE: 04-23-2021
DESIGNED BY: TA
DRAWN BY: TA
REVIEWED BY: DG
REVISED:
REVISED:

SHEET TITLE
MECHANICAL SCHEDULES

SHEET NUMBER
M0.02

PERCENTAGE: BID SET

DRYER VENTING COMPLIANCE

5'-0"	HORIZONTAL LENGTH
6'-6"	VERTICAL LENGTH
1	(#) 90° ELBOWS
16'-6"	**EQUIVALENT DUCT LENGTH**

OWNER PROVIDED EQUIPMENT SHALL EXCEED EQUIVALENT DUCT LENGTH. IF NOT, CONTRACTOR TO PROVIDE WITH DRYER BOOSTER FAN.

DRYER EXHAUST DUCT FITTING EQUIVALENT LENGTH PER IMC 2015 TABLE 504.8.4.1

4" RADIUS MITERED 45° ELBOW	=	2'-6"
4" RADIUS MITERED 90° ELBOW	=	5'-0"
6" RADIUS SMOOTH 45° ELBOW	=	1'-0"
6" RADIUS SMOOTH 90° ELBOW	=	1'-9"

KEYNOTES

KEYNOTE	DESCRIPTION
1	PROVIDE VERTICALLY MOUNTED AHU IN DESIGNATED MECHANICAL ROOM CLOSET AND MOUNT ON WALL/ UNITSTRUT SUPPORT STAND. MAINTAIN ALL MANUFACTURER RECOMMENDED CLEARANCES. ROUTE 3/4" CONDENSATE DRAIN LINE TO HUB DRAIN. RE: SCHEDULES AND DETAILS.
2	LOCATE NEW CEILING MOUNTED EXHAUST FAN IN INDICATED LOCATION. ROUTE 6" ROUND EXHAUST DUCTWORK TO ROOF ABOVE. PROVIDE EXHAUST OUTLET WITH GOOSE-NECK AND INSECT SCREEN. EXHAUST OUTLET SHALL BE MINIMUM 10' AWAY FROM ANY BUILDING AIR INLET. RE: SCHEDULES AND DETAILS.
3	LOCATE CONDENSING UNIT ON CONCRETE PAD IN APPROXIMATE LOCATION. MAINTAIN ALL MANUFACTURER RECOMMENDED CLEARANCES. ROUTE REFRIGERANT LINES TO ASSOCIATED AHU AND SIZE PER MANUFACTURER RECOMMENDATIONS. RE: SCHEDULES AND DETAILS.
4	PROVIDE MECHANICAL ROOM DOOR WITH LOUVERED DOOR. MINIMUM FREE AREA OF EACH DOOR: 4 FT. FREE AREA SIZED AT 50%.
5	LOCATE NEW CEILING MOUNTED ELECTRIC UNIT HEATER IN INDICATED LOCATION. RE: SCHEDULES AND DETAILS.
6	PROVIDE NEW 7-DAY PROGRAMMABLE THERMOSTAT. TIE INTO DESIGNATED EQUIPMENT CONTROLS AND CALIBRATE TO PROVIDE FUNCTIONAL SYSTEM. VERIFY EXACT LOCATION AND MOUNTING HEIGHT WITH ARCHITECT.
7	ROUTE DRYER EXHAUST DUCT TO EXTERIOR WALL. PROVIDE DRYER EXHAUST WITH WIDE-MOUNT DUAL DOOR WALL VENT AT WALL PENETRATION. SIZE DRYER EXHAUST DUCT PER MANUFACTURER SPECIFICATIONS.
8	ROUTE OUTSIDE AIR DUCT FROM MECHANICAL ROOM TO ROOF. PROVIDE WITH MOTORIZED CONTROL DAMPER. PROVIDE INLET WITH GOOSE-NECK AND INSECT SCREEN.
9	PROVIDE IT CLOSET DOOR WITH LOUVERED DOOR. MINIMUM FREE AREA OF EACH DOOR: 4 FT. FREE AREA SIZED AT 50%.

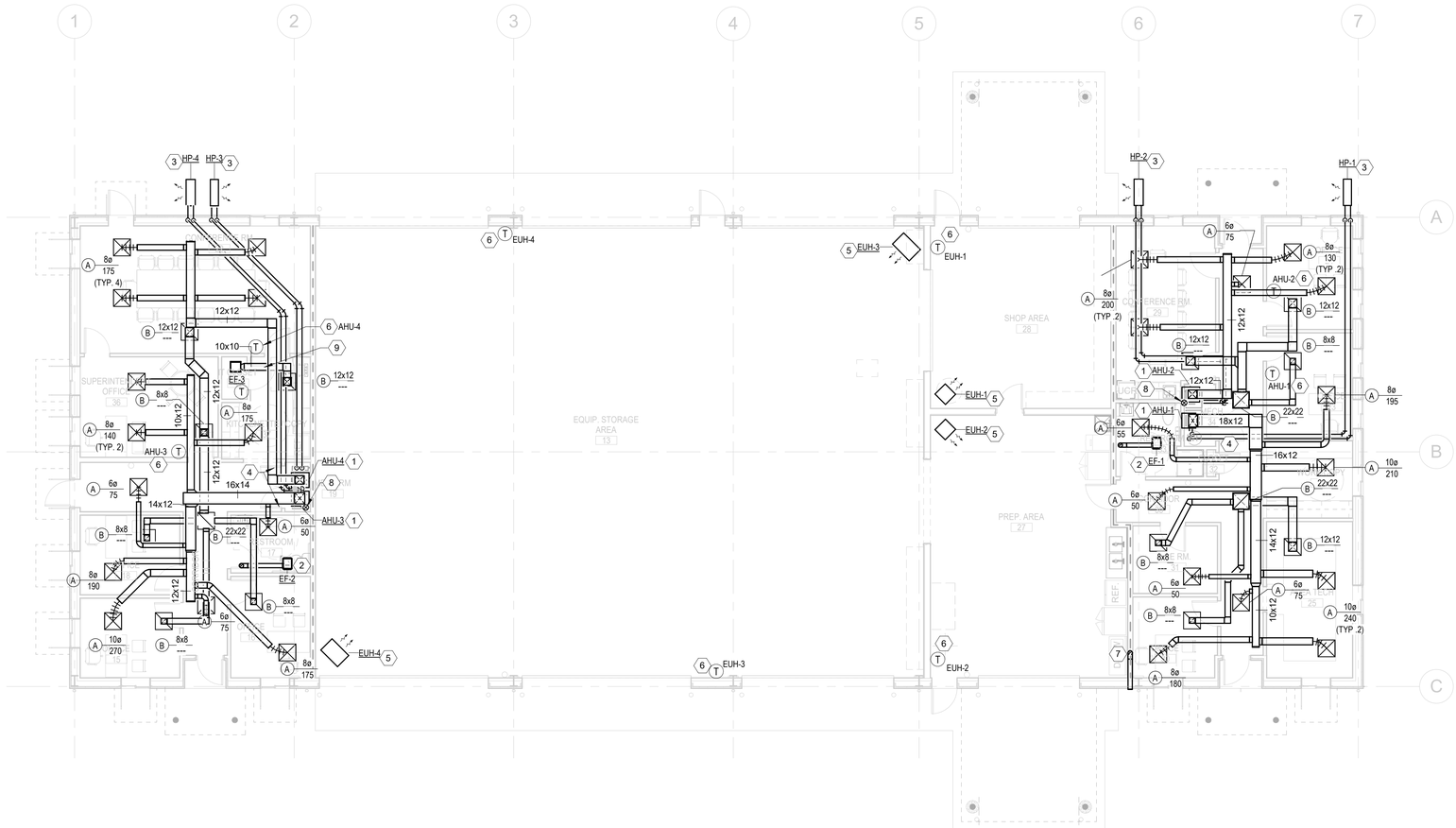

1 **MECHANICAL PLAN**
1/8" = 1'-0"

TEXAS PARKS & WILDLIFE

STATE OF TEXAS
DEREK C. GASKAMP
124024
LICENSED PROFESSIONAL ENGINEER
04/22/2021

PDG ARCHITECTS
10000 RICHMOND
SUITE 100
HOUSTON, TX 77042
713-629-6100

MATHIS FISHERIES OFFICE
AT LAKE CORPUS CHRISTI, MATHIS, TEXAS
PROJECT NUMBER: 127144

DATE:	04-23-2021
DESIGNED BY:	TA
DRAWN BY:	TA
REVIEWED BY:	DG
REVISED:	
REVISED:	

SHEET TITLE
MECHANICAL PLAN

SHEET NUMBER
M2.01

PERCENTAGE: BID SET

PRESTIGE ENGINEERING SERVICES
TBPE Registration Number 18865
909 NE Loop 410, Suite 818
San Antonio, Texas 78209
210.686.0444
www.InfinityMEP.com

GENERAL NOTES

A	CONTRACTOR TO PROVIDE ADEQUATE RETURN AIR OPENINGS IN GYP. WALLS THAT EXTEND TO DECK. SIZE OPENINGS AT 500 FPM. COORDINATE FINAL OPENING SIZE WITH MECHANICAL ENGINEER.
B	CONTRACTOR SHALL CONDUCT FIELD SURVEY TO VERIFY ALL EXISTING CONDITIONS ASSOCIATED WITH SCOPE OF WORK PRIOR TO SUBMITTING BIDS. ANY ADDITIONAL WORK REQUIRED ASSOCIATED WITH FAILURE TO PERFORM A FIELD SURVEY PRIOR TO SUBMITTING BIDS SHALL BE AT NO ADDITONAL COST TO THE OWNER.

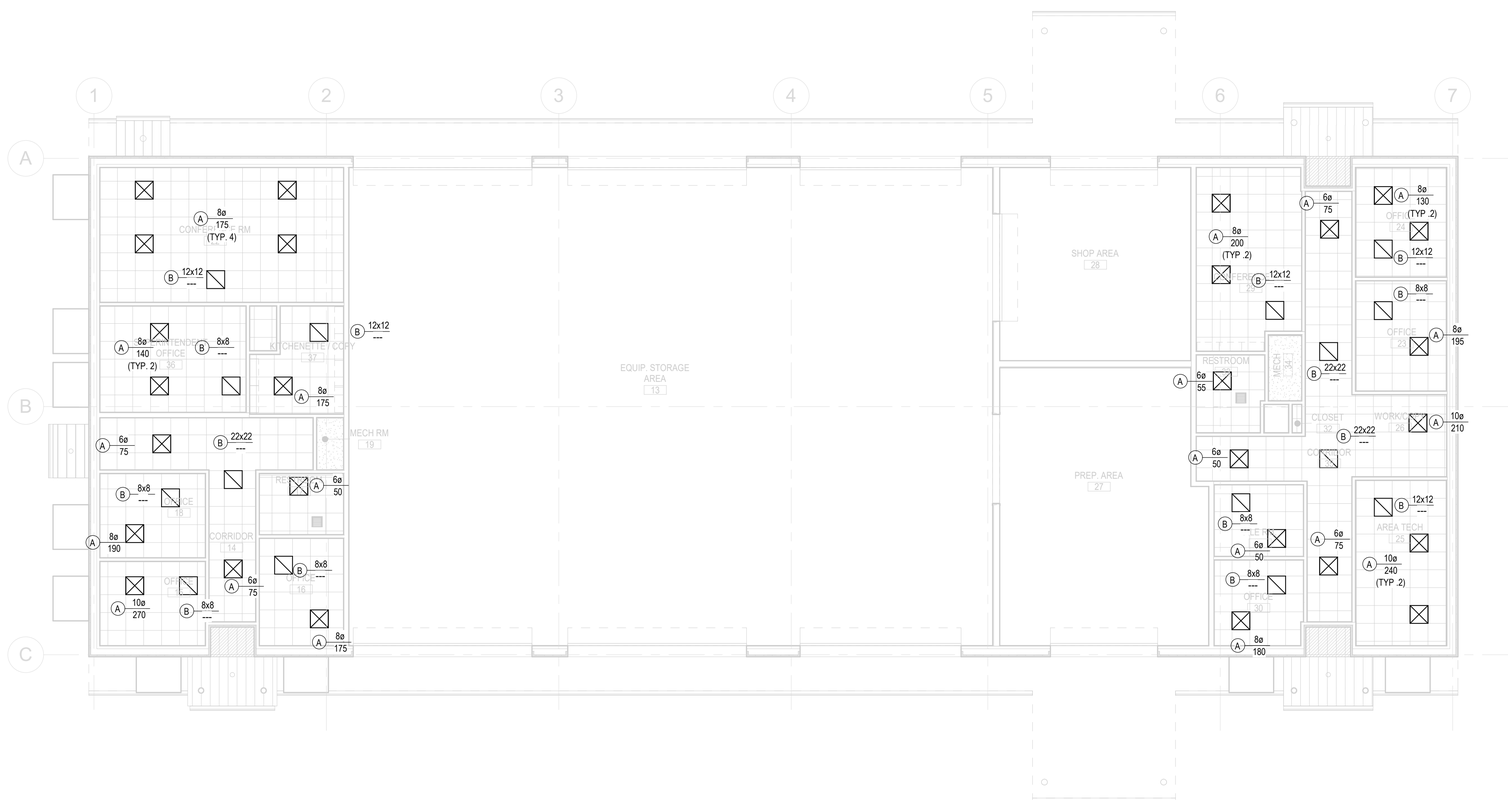

1 MECHANICAL CEILING COORDINATION PLAN

1/8" = 1'-0"

TEXAS PARKS & WILDLIFE

STATE OF TEXAS
DEREK C. GASKAMP
124024
LICENSED PROFESSIONAL ENGINEER
04/22/2021

PDG ARCHITECTS

10000 RICHMOND
SUITE 100
HOUSTON, TX 77042
713-629-6100

MATHIS FISHERIES OFFICE

AT LAKE CORPUS CHRISTI, MATHIS, TEXAS

PROJECT NUMBER: 127144

DATE:	04-23-2021
DESIGNED BY:	TA
DRAWN BY:	TA
REVIEWED BY:	DG
REVISED:	
REVISED:	

SHEET TITLE
MECHANICAL CEILING COORDINATION PLAN

SHEET NUMBER
M2.02

PERCENTAGE: BID SET

PRESTIGE ENGINEERING SERVICES
TBPE Registration Number 18865
909 NE Loop 410, Suite 818
San Antonio, Texas 78209
210.686.0444
www.InfinityMEP.com

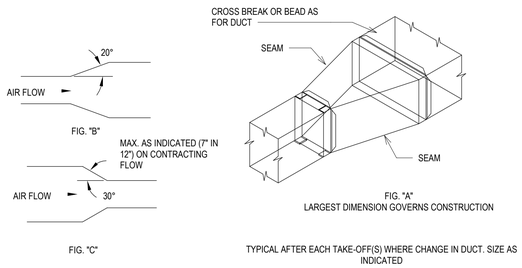

5 DUCT TRANSITION DETAIL
NOT TO SCALE

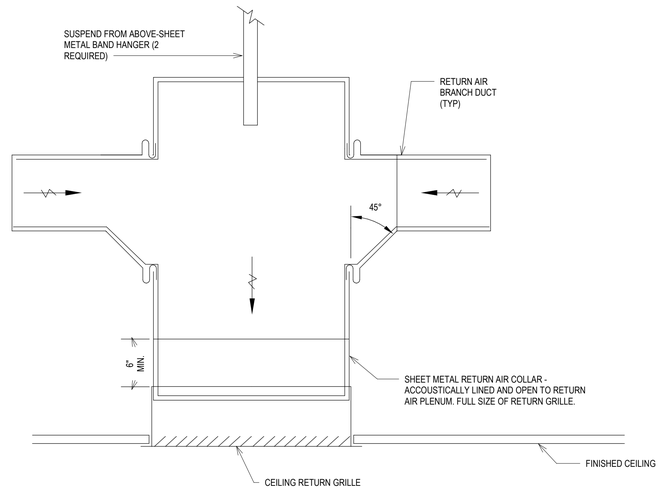

NOTES:

1. REFER TO MECHANICAL PLAN FOR TOTAL CONNECTED BRANCH DUCTS.
2. REFER TO "TYPICAL LOW PRESSURE BRANCH DUCT TAKE-OFF DETAIL" FOR BRANCH DUCT TAKE-OFFS.

4 RETURN AIR TRANSFER DUCT (GRILLE AND COLLAR) DETAIL
NOT TO SCALE

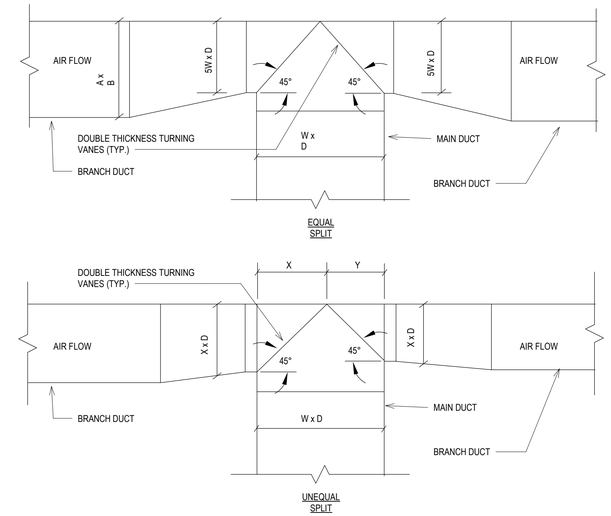

NOTES:

1. DIMENSIONS "X" AND "Y" ARE EQUAL TO (BRANCH CFM - MAIN CFM) x W

2 DUCT TEE CONNECTION DETAIL
NOT TO SCALE

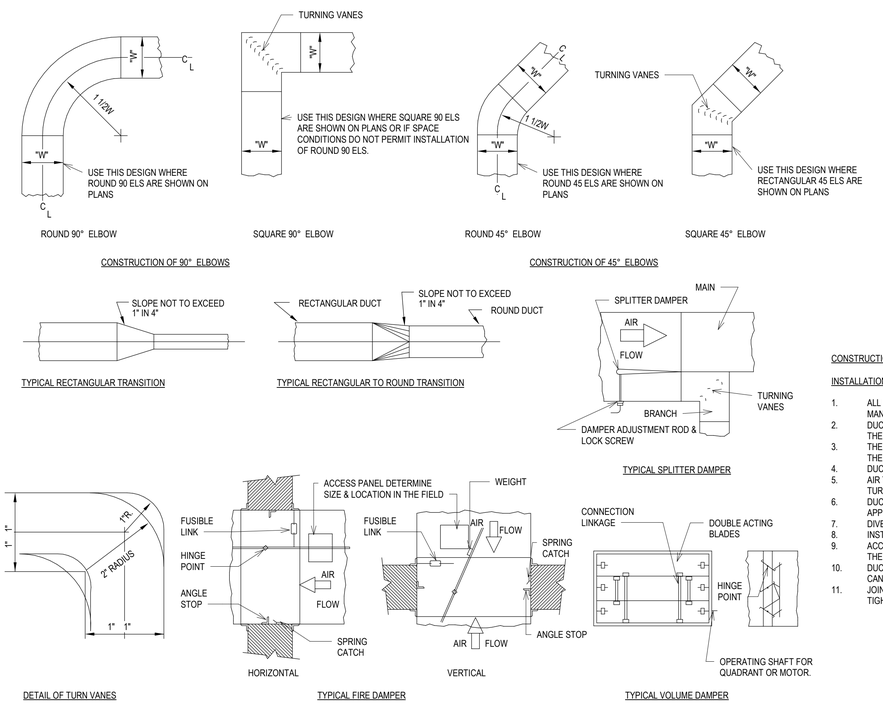

INSTALLATION NOTES:

1. ALL DUCTS SHALL BE CONSTRUCTED AND ERECTED IN A NEAT AND WORKMANLIKE MANNER.
2. DUCTS SHALL BE CONSTRUCTED OF THE WEIGHTS , GAGES AND MATERIAL SHOWN IN THE SCHEDULE ON THESE DRAWINGS.
3. THE DIMENSION SHOWN FOR ALL DUCTS SHOWN IN PLAN GIVE THE WIDTH FIRST AND THEN THE HEIGHT.
4. DUCT RISERS SHOULD BE SUPPORTED BY ANGLES AT EVERY FLOOR.
5. AIR TURNING VANES SHALL BE INSTALLED IN ALL ABRUPT ELBOWS TO PREVENT TURBULENCE.
6. DUCTS SHALL BE SECURELY ATTACHED TO THE BUILDING CONSTRUCTION IN AN APPROVED MANNER.
7. DIVERGING TRANSITION PIECES SHALL BE MADE AS GRADUAL AS POSSIBLE.
8. INSTALL FIRE DAMPERS IN ACCORDANCE WITH UL 555.
9. ACCESS PANELS SHOULD BE PLACED BEFORE AND/ OR AFTER EQUIPMENT INSTALLED IN THE DUCT.
10. DUCT AREA SHOULD NOT BE DECREASED MORE THAN 10% WHEN OBSTRUCTIONS CANNOT BE AVOIDED, AND THEN A STREAMLINED FITTING SHOULD BE USED.
11. JOINTS AND SEAMS OF SUPPLY DUCTS SHALL BE FASTENED SECURELY AND MADE AIR TIGHT.

3 LOW VELOCITY DUCT DETAIL
NOT TO SCALE

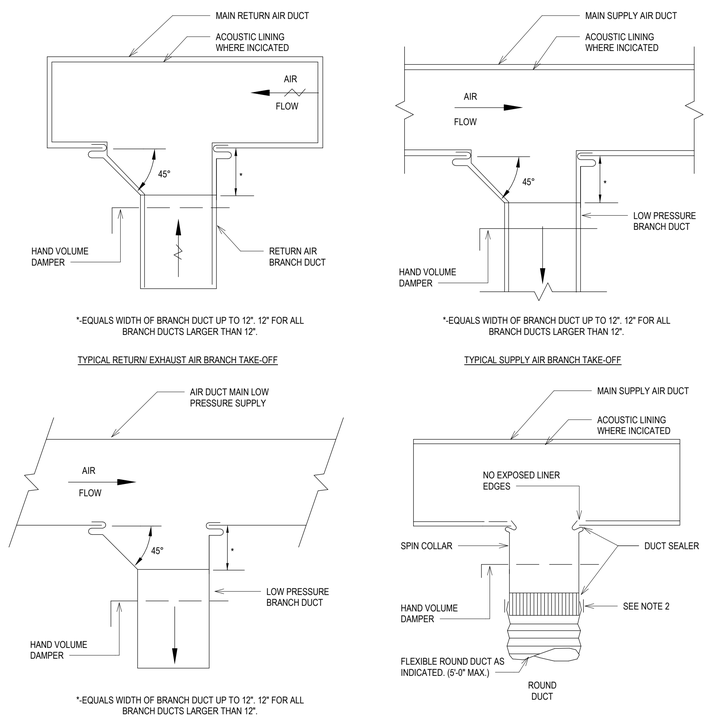

NOTES:

1. PROVIDE BALANCING DAMPER AT BRANCH TAKEOFF.
2. SEAL FLEX DUCT TO METAL COLLAR WITH DUCT TAPE (NASHUA 398 OR EQUAL), INSTALL TIE-WRAP (ULINE JUMBO NATURAL NYLON CABLE TIES) OVER DUCT TAPE. INSTALL DUCT INSULATION OVER METAL COLLAR AND SECURE WITH TIE-WRAP.

1 TYPICAL LOW PRESSURE BRANCH DUCT TAKE-OFF DETAIL
NOT TO SCALE

PRESTIGE ENGINEERING SERVICES
TBPE Registration Number 18865
909 NE Loop 410, Suite 818
San Antonio, Texas 78209
210.686.0444
www.InfinityMEP.com

TEXAS PARKS & WILDLIFE

STATE OF TEXAS
DEREK C. GASKAMP
124024
LICENSED PROFESSIONAL ENGINEER
04/22/2021

PDG ARCHITECTS
10000 RICHMOND
SUITE 100
HOUSTON, TX 77042
713-629-6100

MATHIS FISHERIES OFFICE
AT LAKE CORPUS CHRISTI, MATHIS, TEXAS
PROJECT NUMBER: 127144

DATE:	04-23-2021
DESIGNED BY:	TA
DRAWN BY:	TA
REVIEWED BY:	DG
REVISED:	
REVISED:	

SHEET TITLE
MECHANICAL DETAILS

SHEET NUMBER
M6.01

PERCENTAGE: BID SET

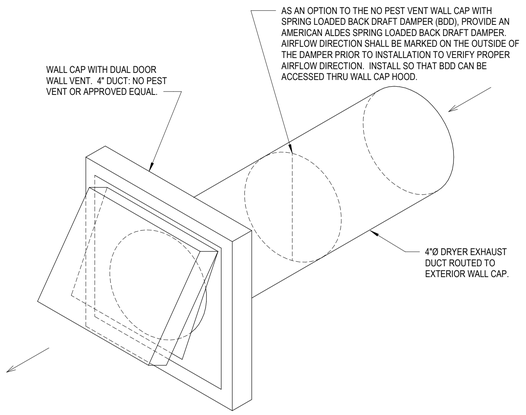

NOTES:

1. "NO PEST VENT" WALL CAP SHALL BE THE SAME SIZE AS THE EXHAUST DUCT. REFER TO FLOOR PLANS FOR SIZE.
2. WALL CAP SHALL BE ALUMINUM OR GALVANIZED STEEL WITH PAINT GRIP COATING FOR FIELD PAINTING (FIELD PAINTING BY OTHERS.) COORDINATE PAINTING WITH GENERAL CONTRACTOR AND ARCHITECT.
3. WALL CAP AND BACK DRAFT DAMPER SHALL BE ALUMINUM CONSTRUCTION FOR COASTAL APPLICATIONS.

6 EXHAUST WALL CAP DETAIL
NOT TO SCALE

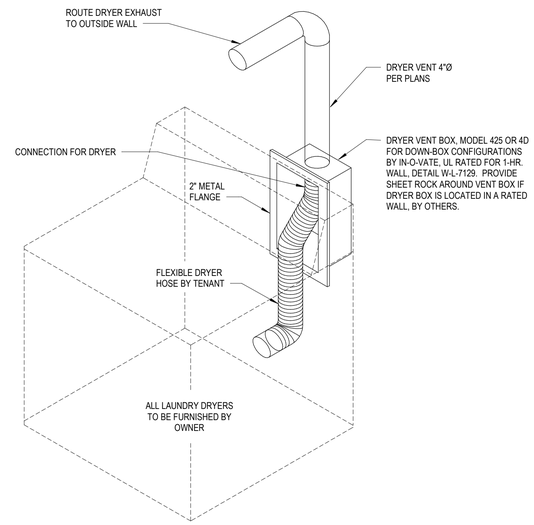

NOTES:

1. DRYER VENT BOXES IN FIRE RATED WALLS SHALL BE UL LISTED.
2. INSTALL MANUFACTUREED ONE HOUR RATED "DRYER BOX" BY IN-O-VATE, MODEL 425 OR 4D.
3. INSTALL PER MANUFACTURER'S REQUIREMENTS TO MAINTAIN FIRE RATING.

5 DRYER VENT WALLBOX DETAIL
NOT TO SCALE

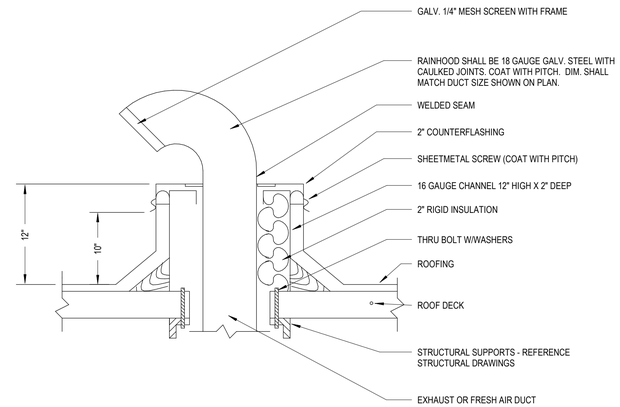

3 ROOF JACK DETAIL
NOT TO SCALE

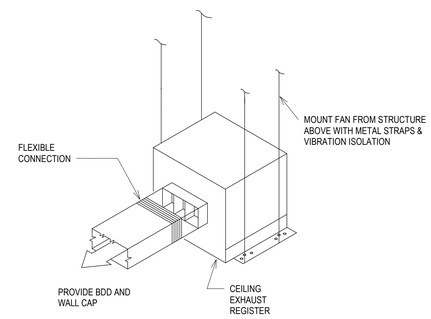

2 CEILING EXHAUST FAN (SIDE DISCHARGE) DETAIL
NOT TO SCALE

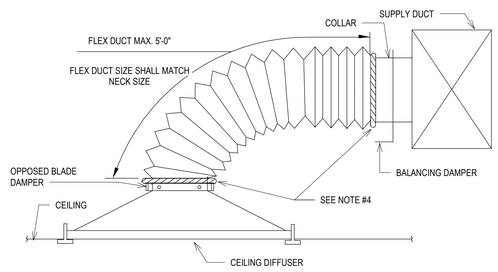

TYPICAL DIFFUSER CONNECTION (SIDE OF DUCT CONNECTION)

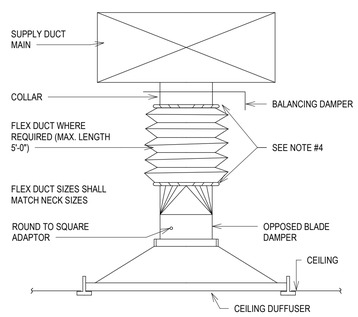

TYPICAL DIFFUSER CONNECTION (BOTTOM OF DUCT CONNECTION)

NOTES:

1. PROVIDE REMOTE CABLE DAMPERS FOR ALL GYP./ NON ACCESSIBLE CEILINGS.
2. PROVIDE BALANCING DAMPER AT BRANCH TAKEOFF.
3. PROVIDE WITH EQUAL TO TITUS "FLEXRIGHT SADDLE" OR HARD RIGHT ELBOW TO ENSURE ADEQUATE AIRFLOW.
4. SEAL FLEX DUCT TO METAL COLLAR WITH DUCT SEALANT, INSTALL TIE-WRAP (ULINE JUMBO NATURAL NYLON CABLE TIES) OVER DUCT SEALANT. INSTALL DUCT INSULATION OVER METAL COLLAR AND SECURE WITH TIE-WRAP. DUCT TAPE IS **NOT** ALLOWED ON TPWD PROJECTS.

4 TYPICAL DIFFUSER CONNECTION DETAIL
NOT TO SCALE

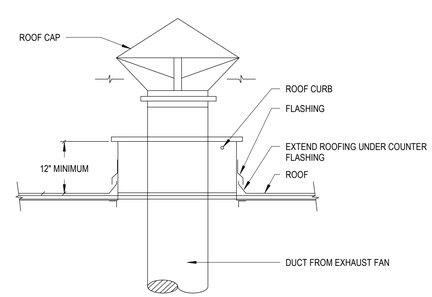

1 ROOF CAP DETAIL
NOT TO SCALE

PRESTIGE ENGINEERING SERVICES
TBPE Registration Number 18865
909 NE Loop 410, Suite 818
San Antonio, Texas 78209
210.686.0444
www.InfinityMEP.com

TEXAS PARKS & WILDLIFE

STATE OF TEXAS
DEREK C. GASKAMP
124024
LICENSED PROFESSIONAL ENGINEER
04/27/2021

PDG ARCHITECTS
10000 RICHMOND
SUITE 100
HOUSTON, TX 77042
713-629-6100

MATHIS FISHERIES OFFICE
AT LAKE CORPUS CHRISTI, MATHIS, TEXAS
PROJECT NUMBER: 127144

DATE:	04-23-2021
DESIGNED BY:	TA
DRAWN BY:	TA
REVIEWED BY:	DG
REVISED:	
REVISED:	

SHEET TITLE
MECHANICAL DETAILS

SHEET NUMBER
M6.02

PERCENTAGE: BID SET

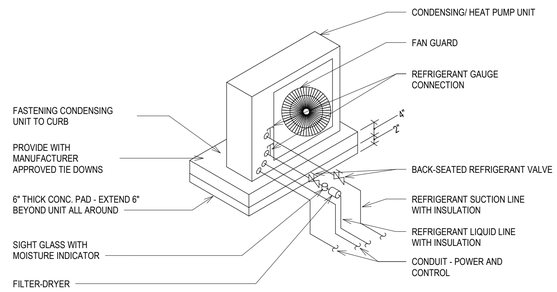

4 DX CONDENSING UNIT - SLAB MOUNTED AT GRADE

NOT TO SCALE

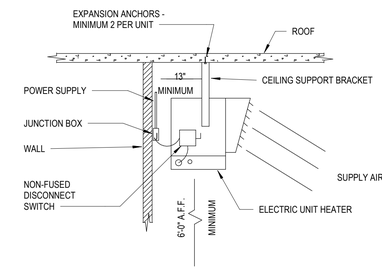

2 ELECTRIC UNIT HEATER MOUNTING DETAIL

NOT TO SCALE

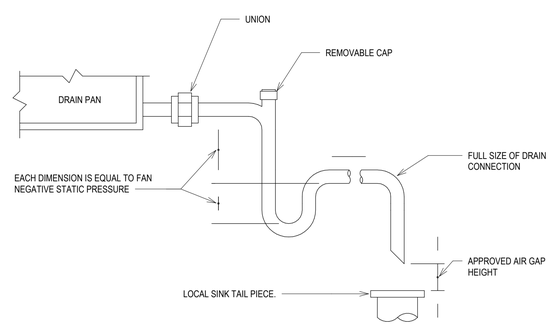

3 CONDENSATE DRAIN DETAIL

NOT TO SCALE

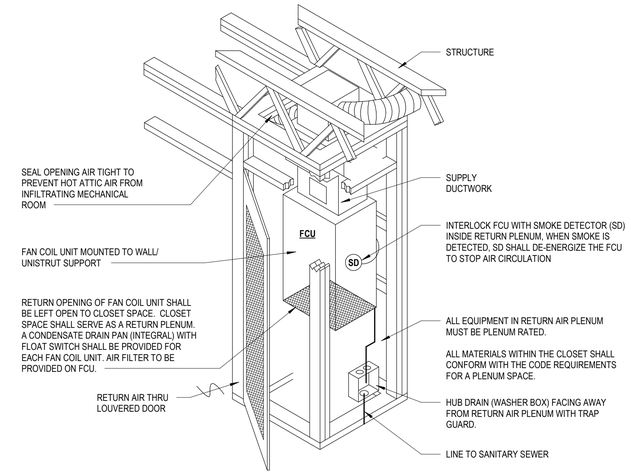

NOTES:

1. ALL EQUIPMENT LOCATED WITHIN THE MECHANICAL ROOM SHALL BE RATED FOR USE IN A RETURN AIR PLENUM, INCLUDING CONDENSATE DRAINS, ELECTRICAL CONNECTIONS, ETC.
2. COMBUSTIBLES NOT ALLOWED WITHIN RETURN AIR PLENUMS. MATERIALS EXPOSED WITHIN DUCTS FOR PLENUMS SHALL HAVE A FLAME-SPREAD INDEX OF NOT MORE THAN 25 AND A SMOKE-DEVELOPED RATING OF NOT MORE THAN 50 WHEN TESTED IN ACCORDANCE WITH THE TEST FOR SURFACE BURNING CHARACTERISTICS OF THE BUILDING MATERIALS.

1 VERTICALLY MOUNTED AHU DETAIL

NOT TO SCALE

PRESTIGE ENGINEERING SERVICES
TBPE Registration Number 18865
909 NE Loop 410, Suite 818
San Antonio, Texas 78209
210.686.0444
www.InfinityMEP.com

TEXAS PARKS & WILDLIFE

STATE OF TEXAS
DEREK C. GASKAMP
124024
LICENSED PROFESSIONAL ENGINEER
04/22/2021

PDG ARCHITECTS
10000 RICHMOND
SUITE 100
HOUSTON, TX 77042
713-629-6100

MATHIS FISHERIES OFFICE
AT LAKE CORPUS CHRISTI, MATHIS, TEXAS
PROJECT NUMBER: 127144

DATE:	04-23-2021
DESIGNED BY:	TA
DRAWN BY:	TA
REVIEWED BY:	DG
REVISED:	
REVISED:	

SHEET TITLE
MECHANICAL DETAILS

SHEET NUMBER
M6.03

PERCENTAGE: BID SET

DX SPLIT SYSTEM

DX SPLIT SYSTEM WILL PROVIDE THE ABILITY TO MONITOR RUN STATUS, ALARMS, AND TEMPERATURE BUT THEY WILL NOT BE CONTROLLABLE VIA A BAS.

NORMAL OPPERATION:
DURING OCCUPIED MODE, THE THREE SPEED SUPPLY FAN WILL BE STARTED AND WILL CYCLE TO MAINTAIN TEMPERATURE. THE CONDENSING UNIT/ HEAT PUMP WILL MODULATE IN SEQUENCE TO MAINTAIN THE ZONE TEMPERATURE SETPOINT.

ALARM:
- INTERLOCK DRAIN PAN FLOAT ALARM TO FCU. CLOSE COOLING COIL CONTROL VALVE AND DE-ENERGIZE FCU UPON FLOAT ALARM ACTIVATION.
- SMOKE DETECTOR TO BE HARDWIRED INTERLOCKED AND SHUTDOWN UNIT UPON SENSING PRODUCT OF COMBUSTION. (PROVIDE SMOKE DETECTOR ON UNITS W/ SUPPLY AIR GREATER THAN 2000 CFM ONLY.)

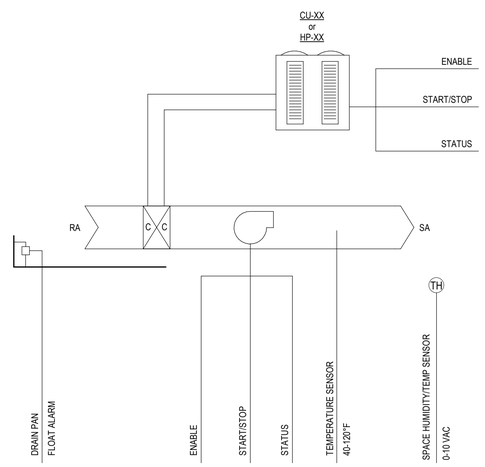

2 DX FCU W/O HEATING COIL CONTROLS

NOT TO SCALE

ELECTRIC UNIT HEATER

1. NORMAL OPERATION - UNIT HEATER SHALL OPERATE TO SATISFY SPACE TEMPERATURE SENSOR.
2. OCCUPIED MODE:
   A. UNIT HEATER AND INTEGRAL SUPPLY FAN SHALL ENERGIZE.
3. UNOCCUPIED MODE:
   A. UNIT HEATER AND INTEGRAL SUPPLY FAN SHALL DE-ENERGIZE.

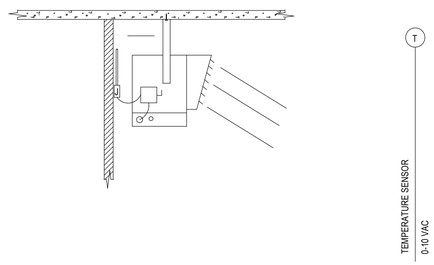

1 ELECTRIC UNIT HEATER CONTROLS

NOT TO SCALE

CONTROLS LEGEND

AI	ANALOG IN	C C	COOLING COIL
AO	ANALOG OUT	G / C	GAS HEAT COIL
DI	DIGITAL IN	R / C	REHEAT COIL
DO	DIGITAL OUT	T	TEMPERATURE STAT/SENSOR
		P	STATIC PRESSURE STAT/SENSOR
		H	HUMIDITY STAT/SENSOR

TEMPERATURE SETPOINTS

OCCUPIED:	COOL 74°F	HEAT 70°F
UN-OCCUPIED:	COOL 78°F	HEAT 68°F

(ALL POINTS ADJ. BY OWNER)

CONTROLS ABBREVIATIONS

B	BOILER
BHP	BRAKE HORSEPOWER
BMS	BUILDING MANAGEMENT SYSTEM
BTU	BRITISH THERMAL UNIT
CA	COMPRESSED AIR
CC	COOLING COIL
CCFM	CUBIC FEET PER MINUTE
CH	CHILLER
CT	COOLING TOWER
CU	CONDENSING UNIT
CW	CONDENSING WATER
DB	DRY BULB
DX	DIRECT EXPANSION
EA	EXHAUST AIR
EAT	ENTERING AIR TEMPERATURE
EF	EXHUAST FAN
EFF	EFFICIENCY
EHC	ELECTRIC HEATING COIL
ERU	ENERGY RECOVERY UNIT
EUH	ELECTIC UNIT HEATER
EWT	ENTERING WATER TEMPERATURE
F	FILTER
FCU	FAN COIL UNIT
FLA	FULL LOAD AMPS
FPB	FAN POWERED BOX
FPTU	FAN POWERED TERMINAL UNIT
FSD	COMBINATION FIRE SMOKE DAMPER
FT	FEET
GEX	GENERAL EXHAUST
GPM	GALLONS PER MINUTE
H	HUMIDIFIER
HC	HEATING COIL
HP	HORSE POWER
HR	HOUR
HW	HOT WATER
HX	HEAT EXCHANGER
HX	PLATE HEAT EXCHANGER
IDEC	INDIRECT EVAPORATIVE COOLER
KW	KILOWATT
KWH	KILOWATT HOURS
KX	KITCHEN EXHAUST
LAT	LEAVING AIR TEMPERATURE
LBS	POUNDS
LRA	LOCK ROTOR AMPS
LWT	LEAVING WATER TEMPERATURE
MAT	MIXED AIR TEMPERATURE
MAX	MAXIMUM
MBH	THOUSAND BTU PER HOUR
MFG	MANUFACTURER
MIN	MINIMUM
MUA	MAKE-UP AIR UNIT
NC	NORMALLY CLOSED
NO	NORMALLY OPEN
NTS	NOT TO SCALE
OAHU	OUTSIDE AIR HANDLING UNIT
P	PUMP
PHC	PRE-HEAT COIL
PRV	PRESSURE RELIEF VALVE
PSI	POUNDS PER SQUARE INCH
RA	RETURN AIR
RF	RETURN FAN
RH	RELATIVE HUMIDITY
RHC	REHEAT COIL
RPM	ROVOLUTIONS PER MINUTE
SA	SUPPLY AIR
SD	SMOKE DAMPER
SENS	SENSIBLE
SF	SUPPLY FAN
SP	STATIC PRESSURE
TF	TRANSFER FAN
TYP	TYPICAL
UH	UNIT HEATER
VAV	VARIABLE AIR VOLUME
VD	VOLUME DAMPER
VFD	VARIABLE FREQUENCY DRIVE
WB	WET BULB
WG	WATER GAUGE
wtwt	AIR HANDLING UNIT
°F	DEGREES FAHRENHEIT

DRAWINGS INCOMPLETE

THIS DOCUMENT FOR REVIEW ONLY. NOT INTENDED FOR PERMITTING, BIDDING OR CONSTRUCTION PURPOSES.

PRESTIGE ENGINEERING SERVICES
TBPE FIRM REGISTRATION NUMBER: 18865

DEREK GASKAMP
124024

PRESTIGE ENGINEERING SERVICES
TBPE Registration Number 18865
909 NE Loop 410, Suite 818
San Antonio, Texas 78209
210.686.0444
www.InfinityMEP.com

TEXAS PARKS & WILDLIFE

STATE OF TEXAS
DEREK C. GASKAMP
124024
LICENSED PROFESSIONAL ENGINEER
04/22/2021

PDG ARCHITECTS
10000 RICHMOND
SUITE 100
HOUSTON, TX 77042
713-629-6100

MATHIS FISHERIES OFFICE
AT LAKE CORPUS CHRISTI, MATHIS, TEXAS
PROJECT NUMBER: 127144

DATE:	04-23-2021
DESIGNED BY:	TA
DRAWN BY:	TA
REVIEWED BY:	DG
REVISED:	
REVISED:	

SHEET TITLE
MECHANICAL CONTROLS

SHEET NUMBER
M7.01

PERCENTAGE: BID SET

BRANCH CIRCUIT WIRING SCHEDULE

BREAKER AMPERAGE	BREAKER POLE	WIRE SIZE
20A	1P	2#12, #12G, 3/4"C
20A	2P	3#12, #12G, 3/4"C
20A	3P	4#12, #12G, 3/4"C
30A	1P	2#10, #10G, 3/4"C
30A	2P	3#10, #10G, 3/4"C
30A	3P	4#10, #10G, 3/4"C
40A	1P	2#8, #10G, 3/4"C
40A	2P	3#8, #10G, 3/4"C
40A	3P	4#8, #10G, 1"C
50A	2P	3#6, #10G, 1"C
50A	3P	4#6, #10G, 1-1/2"C
60A	2P	3#6, #10G, 1"C
60A	3P	4#6, #10G, 1-1/2"C
70A	2P	3#4, #8G, 1-1/2"C
70A	3P	4#4, #8G, 1-1/2"C
80A	2P	3#4, #8G, 1-1/2"C
80A	3P	4#4, #8G, 1-1/2"C
100A	2P	3#3, #8G, 1-1/2"C
100A	3P	4#3, #8G, 1-1/12"C

NOTES:

1. BASED ON 30C AMBIENT AND 75C CONDUCTORS. RESIZE FEEDER PER NEC FOR OTHER AMBIENT TEMPERATURES.
2. ALL FEEDERS SHALL BE THHN/THWN-2 COPPER, UNLESS NOTED OTHERWISE.
3. BRANCH CIRCUITS DO NOT ACCOUNT FOR VOLTAGE DROP.
4. BASED ON 3 CURRENT CARRYING CONDUCTORS IN RACEWAY.

FEEDER SCHEDULE (COPPER)

FEEDER TAG	FEEDER SIZE
15.3, 20.3	3#12, #12G, 3/4"C
15.4, 20.4	4#12, #12G, 3/4"C
30.3	3#10, #10G, 3/4"C
30.4	4#10, #10G, 3/4"C
40.3	3#8, #10G, 3/4"C
40.4	4#8, #10G, 3/4"C
50.3	3#6, #10G, 3/4"C
50.4	4#6, #10G, 1"C
60.3	3#4, #10G, 1"C
60.4	4#4, #10G, 1-1/4"C
70.3	3#4, #8G, 1"C
70.4	4#4, #8G, 1-1/2"C
80.3	3#3, #8G, 1-1/4"C
80.4	4#3, #8G, 1-1/4"C
90.3	3#2, #8G, 1-1/4"C
90.4	4#2, #8G, 1-1/4"C
100.3	3#1, #8G, 1-1/4"C
100.4	4#1, #8G, 1-1/2"C
110.3	3#1, #8G, 1-1/4"C
110.4	4#1, #8G, 1-1/2"C
125.3, 150.3	3#1/0, #6G, 1-1/2"C
125.4 150.4	4#1/0, #6G, 2"C
175.3	3#2/0, #6G, 2"C
175.4	4#2/0, #6G, 2"C
200.3	3#3/0, #6G, 2"C
200.4	4#3/0, #6G, 2"C
225.3	3#4/0, #4G, 2"C
225.4	4#4/0, #4G, 2-1/2"C
250.3	3#250, #4G, 2-1/2"C
250.4	4#250, #4G, 2-1/2"C
300.3	3#350, #4G, 2-1/2"C
300.4	4#350, #4G, 3"C
350.3	3#500, #3G, 3"C
350.4	4#500, #3G, 3-1/2"C
400.3	2 SETS OF 3#3/0, #3G, 2"C
400.4	2 SETS OF 4#3/0, #3G, 2-1/2"C
500.3	2 SETS OF 3#250, #2G, 2-1/2"C
500.4	2 SETS OF 4#250, #2G, 2-1/2"C
600.3	2 SETS OF 3#350, #1G, 2-1/2"C
600.4	2 SETS OF 4#350, #1G, 2-1/2"C
700.3	2 SETS OF 3#1/0, #2G, 3"C
700.4	2 SETS OF 4#500, #1/0G, 3-1/2"C
800.3	2 SETS OF 3#600, #1/0G, 3-1/2"C
800.4	2 SETS OF 4#600, #1/0G, 4"C
1000.3	3 SETS OF 3#500, #2/0G, 3"C
1000.4	3 SETS OF 4#500, #2/0G, 3"C
1200.3	4 SETS OF 3#350, #3/0G, 3"C
1200.4	4 SETS OF 4#350, #3/0G, 3-1/2"C
1600.3	5 SETS OF 3#500, #4/0G, 3"C
1600.4	5 SETS OF 4#500, #4/0G, 3"C
2000.3	6 SETS OF 3#500, #4/0G, 3"C
2000.4	6 SETS OF 4#500, #4/0G, 3"C
2500.3	7 SETS OF 3#500, #4/0G, 3-1/2"C
2500.4	7 SETS OF 4#500, #4/0G, 3-1/2"C
3000.3	8 SETS OF 3#500, #4/0G, 3"C
3000.4	8 SETS OF 4#500, #4/0G, 3-1/2"C
3200.3	8 SETS OF 3#600, #4/0G, 4"C
3200.4	8 SETS OF 4#600, #4/0G, 4"C
4000.3	10 SETS OF 3#600, #4/0G, 4"C
4000.4	10 SETS OF 4#600, #4/0G, 4"C

NOTES:

1. BASED ON 30C AMBIENT AND 75C CONDUCTORS. RESIZE FEEDER PER NEC FOR OTHER AMBIENT TEMPERATURES.
2. ALL FEEDERS SHALL BE THHN/THWN-2 COPPER, UNLESS NOTED OTHERWISE.
3. BRANCH CIRCUITS DO NOT ACCOUNT FOR VOLTAGE DROP.
4. BASED ON 3 CURRENT CARRYING CONDUCTORS IN RACEWAY.

ELECTRICAL LEGEND

F	MANUAL FIRE PULL STATION
SD	AREA SMOKE DETECTOR, CEILING MOUNTED
SD	AREA SMOKE DETECTOR, WALL MOUNTED
SD	SMOKE DETECTOR, MOUNTED IN DUCT
HD	HEAT DETECTOR, CEILING MOUNTED
W	SPRINKLER WATER FLOW SWITCH
T	SPRINKLER TAMPER SWITCH
A	AUDIBLE FIRE ALARM STROBE, CEILING MOUNTED
A	AUDIBLE FIRE ALARM STROBE, WALL MOUNTED
AV	AUDIO/VISUAL FIRE ALARM STROBE, CEILING MOUNTED
AV	AUDIO/VISUAL FIRE ALARM STROBE WALL MOUNTED
V	VISUAL FIRE ALARM STROBE, CEILING MOUNTED
V	VISUAL FIRE ALARM STROBE, WALL MOUNTED
FJ	FIREMAN'S JACK
FB	FIRE ALARM BELL
F/S	FIRE/SMOKE DAMPER
S	SMOKE DAMPER
FACP	FIRE ALARM CONTROL PANEL
FAAP	FIRE ALARM REMOTE ANNUNCIATOR PANEL
	SIMPLEX RECEPTACLE, WALL MOUNTED
	DUPLEX RECEPTACLE, WALL MOUNTED
	DUPLEX RECEPTACLE, CEILING MOUNTED
	DUPLEX RECEPTACLE, TOP HALF SWITCHED
	QUADRUPLEX RECEPTACLE, WALL MOUNTED
	SPECIAL PURPOSE RECEPTACLE, WALL MOUNTED, COORDINATE NEMA PLUG TYPE WITH OWNER
GFI	DUPLEX RECEPTACLE, GROUND FAULT INTERRUPTER
IG	DUPLEX RECEPTACLE, ISOLATED GROUND
WP	DUPLEX RECEPTACLE, WEATHERPROOF
	COMBINATION POWER/TELECOM FLOOR BOX OR FIRE RATED POKE THRU DEVICE, REFER TO PLANS FOR SPECIFICATION
	TELECOM OUTLET. PROVIDE BACK BOX/COVER PLATE. INSTALL 3/4"C W/BUSHING AND PULLSTRING, STUBBED TO ACCESSIBLE CEILING.
TV	TELEVISION OUTLET. PROVIDE BACK BOX/COVER PLATE. INSTALL 3/4"C W/BUSHING AND PULLSTRING, STUBBED TO ACCESSIBLE CEILING.
$	SINGLE POLE SWITCH
$2	DOUBLE POLE SWITCH
$3	THREE WAY SWITCH
$4	FOUR WAY SWITCH
$K	KEY LOCKED SWITCH
$MC	MOMENTARY CONTACT SWITCH
$T	TIMER SWITCH
$D	WALL DIMMER
$LV	LOW VOLTAGE SWITCH
$O	OCCUPANCY SENSOR SWITCH
$V	VACANCY SENSOR SWITCH
PC	PHOTOCELL
VS DS	VACANCY OR OCCUPANCY SENSOR SWITCH WATTSTOPPER DW-100 SERIES
VS OS	CEILING MOUNTED VACANCY OR OCCUPANCY SENSOR WATTSTOPPER DT-300 SERIES

ELECTRICAL LEGEND

	SURFACE MOUNTED PANEL
	PANEL RECESSED IN WALL
T F	STEP DOWN TRANSFORMER
	GROUND BUS BAR
	HEAVY DUTY DISCONNECT SWITCH
	HEAVY DUTY FUSED DISCONNECT SWITCH
	COMBINATION MOTOR STARTER/DISCONNECT SWITCH
VFD	VFD WITH DISCONNECT, COORDINATE WITH MECHANICAL CONTRACTOR
EPO	EMERGENCY POWER OFF SWITCH
$MS	MOTORIZED SHADE CONTROL
$T	THERMAL OVERLOAD SWITCH
10	MOTOR CONNECTION, HP AS NOTED
M 1/2	SINGLE PHASE MOTOR CONNECTION, HP AS NOTED
J	JUNCTION BOX
J	JUNCTION BOX, WALL MOUNTED
P B	PULL BOX
	GROUND ROD
	GROUND WELL
	CIRCUIT BREAKER
	SWITCH AND FUSE
	ENCLOSED CIRCUIT BREAKER
	NORMALLY OPEN CONTACT
	NORMALLY CLOSED CONTACT
	NUMBERED NOTE
	EXIT SIGN; WALL MOUNTED
	EXIT SIGN; CEILING MOUNTED
	FIXED CLOSED CIRCUIT CAMERA
MS	MOTION SENSOR
ML	MAGNETIC LOCK
KP	KEYPAD
DR	DOOR RELEASE
PB	PUSH BUTTON
CR	CARD READER
EL	ELECTRIC LOCK
ES	ELECTRIC STRIKE
	CONDUIT CONCEALED IN CEILING OR WALL
	CONDUIT BELOW FLOOR OR IN SLAB
	CONDUIT STUBBED OUT AND CAPPED W/PULLSTRING
	CONDUIT HOMERUN BACK TO PANEL

ELECTRICAL SHEET LIST

SHEET NUMBER	SHEET NAME
E0.01	ELECTRICAL COVER SHEET
E1.01	ELECTRICAL SITE PLAN
E2.01	POWER PLAN
E2.02	POWER EQUIPMENT PLAN
E3.01	LIGHTING PLAN
E3.02	LIGHTING PLAN
E4.01	LOW VOLTAGE PLAN
E6.01	ELECTRICAL DETAILS
E6.02	ELECTRICAL DETAILS
E6.03	ELECTRICAL DETAILS
E7.00	PANEL SCHEDULES & RISER

ELECTRICAL ABBREVIATIONS

(E)/EXIST	EXISTING
(N)	NEW
(R)/RELOC	EXISTING TO BE RELOCATED
A	AMPERES
A/V	AUDIO/VISUAL
AF	AMPERE FUSE RATING
AFF	ABOVE FINISHED FLOOR
AFG	ABOVE FINISHED GRADE
AIC	AMPERES INTERRUPTING CAPACITY
AL	ALUMINUM
AT	AMPERE TRIP RATING
ATS	AUTOMATIC TRANSFER SWITCH
BKR	BREAKER
BLDG	BUILDING
C	CONDUIT
CCTV	CLOSED CIRCUIT TELEVISION
CKT	CIRCUIT
CM	CEILING MOUNTED
CU	COPPER
DIA	DIAMETER
DPDT	DOUBLE POLE DOUBLE THROW
ELEC	ELECTRICAL
EMT	ELECTRICAL METALLIC TUBING
EP	EXPLOSION PROOF
FAAP	FIRE ALARM ANNUNCIATOR PANEL
FACP	FIRE ALARM CONTROL PANEL
FWE	FURNISHED WITH EQUIPMENT
GC	GENERAL CONTRACTOR
GFI/GFCI	GROUND FAULT CIRCUIT INTERRUPTER
GND	GROUND
HP	HORSEPOWER
IG	ISOLATED GROUND
KVA	KILO-VOLT AMPERE
KW	KILO-WATT
LTG	LIGHTING
MCB	MAIN CIRCUIT BREAKER
MCC	MOTOR CONTROL CENTER
MDP	MAIN DISTRIBUTION PANEL
MLO	MAIN LUGS ONLY
MTD	MOUNTED
MTS	MANUAL TRANSFER SWITCH
NC	NORMALLY CLOSED
NEUT	NEUTRAL
NIC	NOT IN CONTRACT
NO	NORMALLY OPEN
NTS	NOT TO SCALE
PB	PULL BOX
PNL	PANEL
PVC	POLYVINYL CHLORIDE CONDUIT
SH	SHIELDED
SWBD	SWITCHBOARD
SWGR	SWITCHGEAR
TC	TIME CLOCK
TS	TIME SWITCH
TVSS	TRANSIENT VOLTAGE SURGE SUPRESSOR
TYP	TYPICAL
UON	UNLESS OTHERWISE NOTED
UPS	UNINTERRUPTABLE POWER SUPPLY
V	VOLT
WP	WEATHERPROOF

TEXAS PARKS & WILDLIFE

STATE OF TEXAS
ANDREW D. HUNTER
109975
LICENSED
PROFESSIONAL ENGINEER
04/23/2021

PDG ARCHITECTS
10000 RICHMOND
SUITE 100
HOUSTON, TX 77042
713-629-6100

MATHIS FISHERIES OFFICE
AT LAKE CORPUS CHRISTI, MATHIS, TEXAS
PROJECT NUMBER: 127144

DATE: 04-23-2021
DESIGNED BY: TA
DRAWN BY: Author
REVIEWED BY: Approver
REVISED:
REVISED:

SHEET TITLE
ELECTRICAL COVER SHEET

SHEET NUMBER
E0.01

PERCENTAGE: BID SET

PRESTIGE ENGINEERING SERVICES
TBPE Registration Number 18865
909 NE Loop 410, Suite 818
San Antonio, Texas 78209
210.686.0444
www.InfinityMEP.com

KEYNOTES

KEYNOTE	DESCRIPTION
1	4" CONDUITS ROUTED UNDERGROUND FROM DISCONNECT TO PANEL LA.
2	4" CONDUIT WITH PULLSTRING ROUTED UNDERGROUND FROM TRANSFORMER POLE TO PHONE CLOSET FOR TELECOM.
3	METER, C.T. CAN, AND DISCONNECT MOUNTED ON UNISTRUT RACK.
4	NEW OVERHEAD POWER LINES FROM EXISTING AEP POWER POLE TO NEW TRANSFORMER POLE. COORDINATE WORK WITH AEP PRIOR TO CONSTRUCTION.
5	208V POWER FOR LIFT STATION. REFER TO DETAIL 1/E6.02.
6	RV PEDESTAL SHALL BE MIDWEST #VPKJHAAT WITH GALVANIZED STEEL POST. PROVIDE 4" CONCRETE HOUSEKEEPING. HOMERUN TO PANEL WITH 3#6, #10G, 1"C
7	PROVIDE 120V POWER FOR GATE OPERATOR. PROVIDE 2"C BACK TO DATA CLOSET FOR CONTROL. POWER FEEDER SHALL BE 2#6, #10G, 2"C.
8	PROVIDE 120V POWER FOR GATE OPERATOR. PROVIDE 2"C BACK TO DATA CLOSET FOR CONTROL. POWER FEEDER SHALL BE 2#10, #10G, 2"C.
9	2" CONDUIT UNDERGROUND FOR POLE BARN POWER AND LIGHTING. WIRE SHALL BE 2#10, #10G.
10	120V POWER FOR IRRIGATION CONTROLLER.

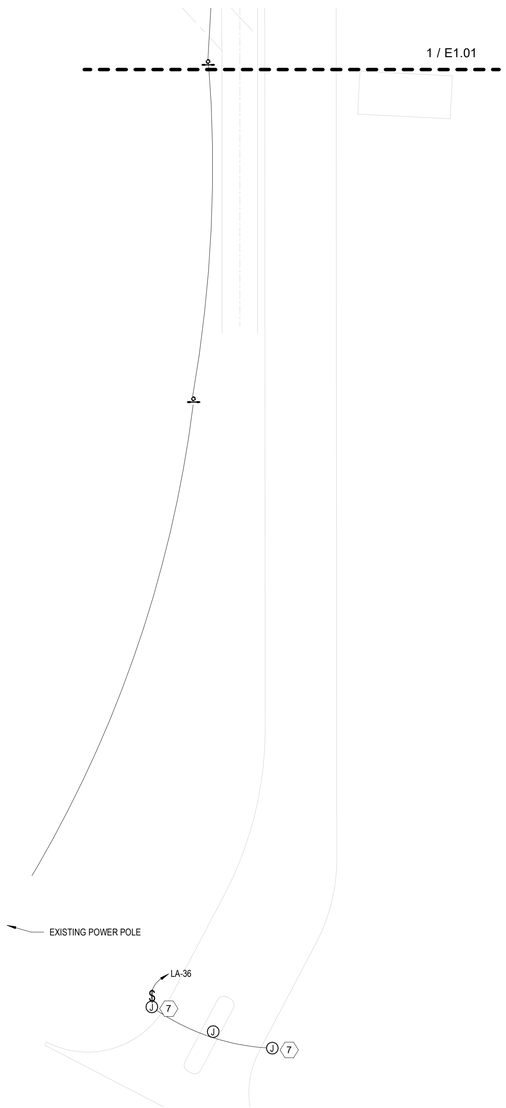

2 ELECTRICAL SITE PLAN - SOUTH
1" = 20'-0"

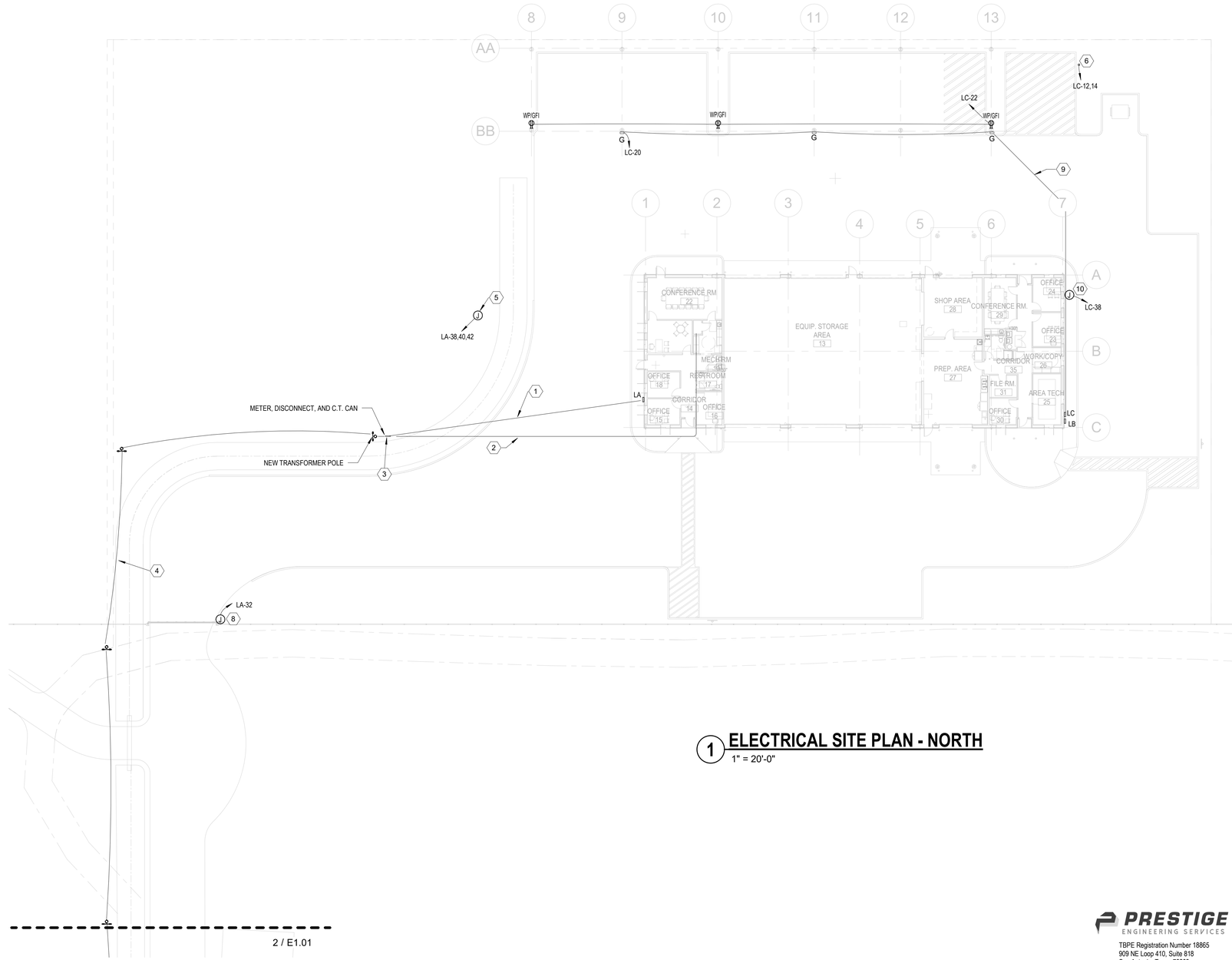

1 ELECTRICAL SITE PLAN - NORTH
1" = 20'-0"

2 / E1.01

PRESTIGE ENGINEERING SERVICES
TBPE Registration Number 18865
909 NE Loop 410, Suite 818
San Antonio, Texas 78209
210.686.0444
www.InfinityMEP.com

TEXAS PARKS & WILDLIFE

STATE OF TEXAS
ANDREW D. HUNTER
109975
LICENSED
PROFESSIONAL ENGINEER
04/23/2021

PDG ARCHITECTS
10000 RICHMOND
SUITE 100
HOUSTON, TX 77042
713-629-6100

MATHIS FISHERIES OFFICE
AT LAKE CORPUS CHRISTI, MATHIS, TEXAS
PROJECT NUMBER: 127144

DATE: 04-23-2021
DESIGNED BY: TA
DRAWN BY: Author
REVIEWED BY: Approver
REVISED:
REVISED:

SHEET TITLE
ELECTRICAL SITE PLAN

SHEET NUMBER
E1.01

PERCENTAGE: BID SET

GENERAL NOTES

A	PROVIDE RECESSED CLOCK TYPE BOX FOR ALL WALL MOUNTED TV POWER AND A/V DEVICES.
C	ALL RECEPTACLES AND DATA BACKBOXES SHALL BE MOUNTED AT 15" AFF UNLESS NOTED OTHERWISE.

KEYNOTES

KEYNOTE	DESCRIPTION
1	MANUAL TRANSFER SWITCH WITH INTEGRAL GENERATOR CAM LOCK CONNECTION. PROVIDE POWERTRON SOLUTIONS MTS SERIES OR EQUIVALENT.
2	4'x8'x3/4" FIRE RATED PLYWOOD FOR IT EQUIPMENT. PROVIDE TELECOMMUNICATIONS GROUND BUS BAR WITH #6 GREEN INSULATED GROUND WIRE BACK TO ELECTRICAL PANEL SERVICING THIS ROOM.
3	PROVIDE RECESSED FLOOR BOX FOR CONFERENCE ROOM. FLOOR BOX SHALL BE HUBBELL #CFB6G30CR OR EQUIVALENT AND COVER PLATE TO MATCH FLOOR TYPE. PROVIDE 1-1/2"C W/PULLSTRING FOR DATA AND 3/4"C FOR POWER IN SLAB TO NEAREST WALL AND STUB TO ACCESSIBLE CEILING. COORDINATE FLOOR BOX ACCESSORIES WITH AV REP. COORDINATE FINISH AND LOCATION WITH ARCHITECT.
4	PROVIDE 4" CONDUIT BETWEEN TELECOM ROOM AND COORIDOR FOR TELECOM CABLING. PROVIDE 4" CONDUIT BETWEEN SPACES FOR FIRE ALARM CABLING.
5	120V POWER FOR OVERHEAD DOOR.

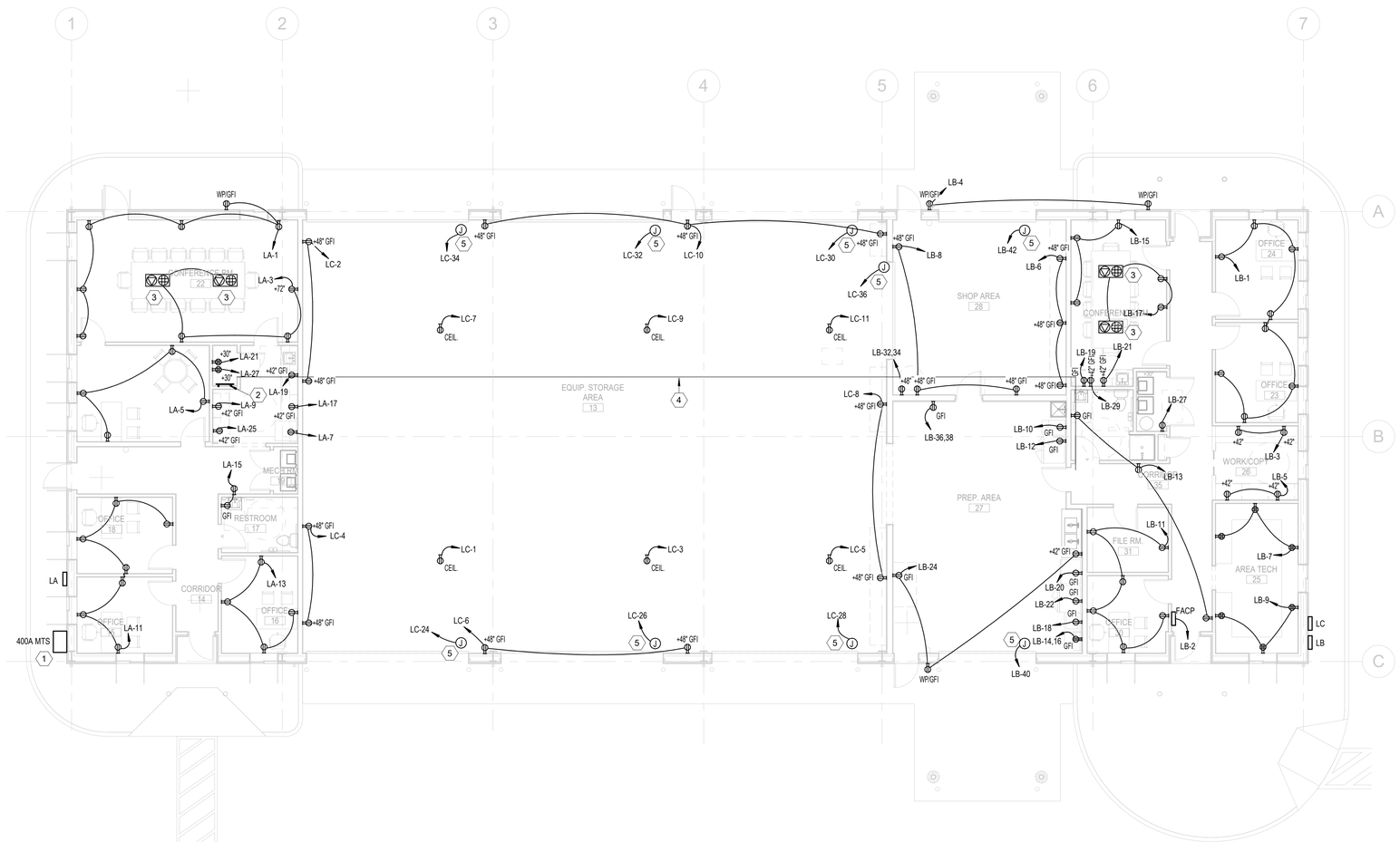

1 **POWER PLAN**
1/8" = 1'-0"

TEXAS PARKS & WILDLIFE

STATE OF TEXAS
ANDREW D. HUNTER
109975
LICENSED
PROFESSIONAL ENGINEER
04/23/2021

PDG ARCHITECTS
10000 RICHMOND
SUITE 100
HOUSTON, TX 77042
713-629-6100

MATHIS FISHERIES OFFICE
AT LAKE CORPUS CHRISTI, MATHIS, TEXAS
PROJECT NUMBER: 127144

DATE: 04-23-2021
DESIGNED BY: TA
DRAWN BY: Author
REVIEWED BY: Approver
REVISED:
REVISED:

SHEET TITLE
POWER PLAN

SHEET NUMBER
E2.01

PERCENTAGE: BID SET

PRESTIGE ENGINEERING SERVICES
TBPE Registration Number 18865
909 NE Loop 410, Suite 818
San Antonio, Texas 78209
210.686.0444
www.InfinityMEP.com

KEYNOTES

KEYNOTE	DESCRIPTION
1	HOMERUN AHU VIA CONDENSING UNIT
2	EXHAUST FAN SHALL BE CONTROLLED BY ROOM LIGHT SWITCH.

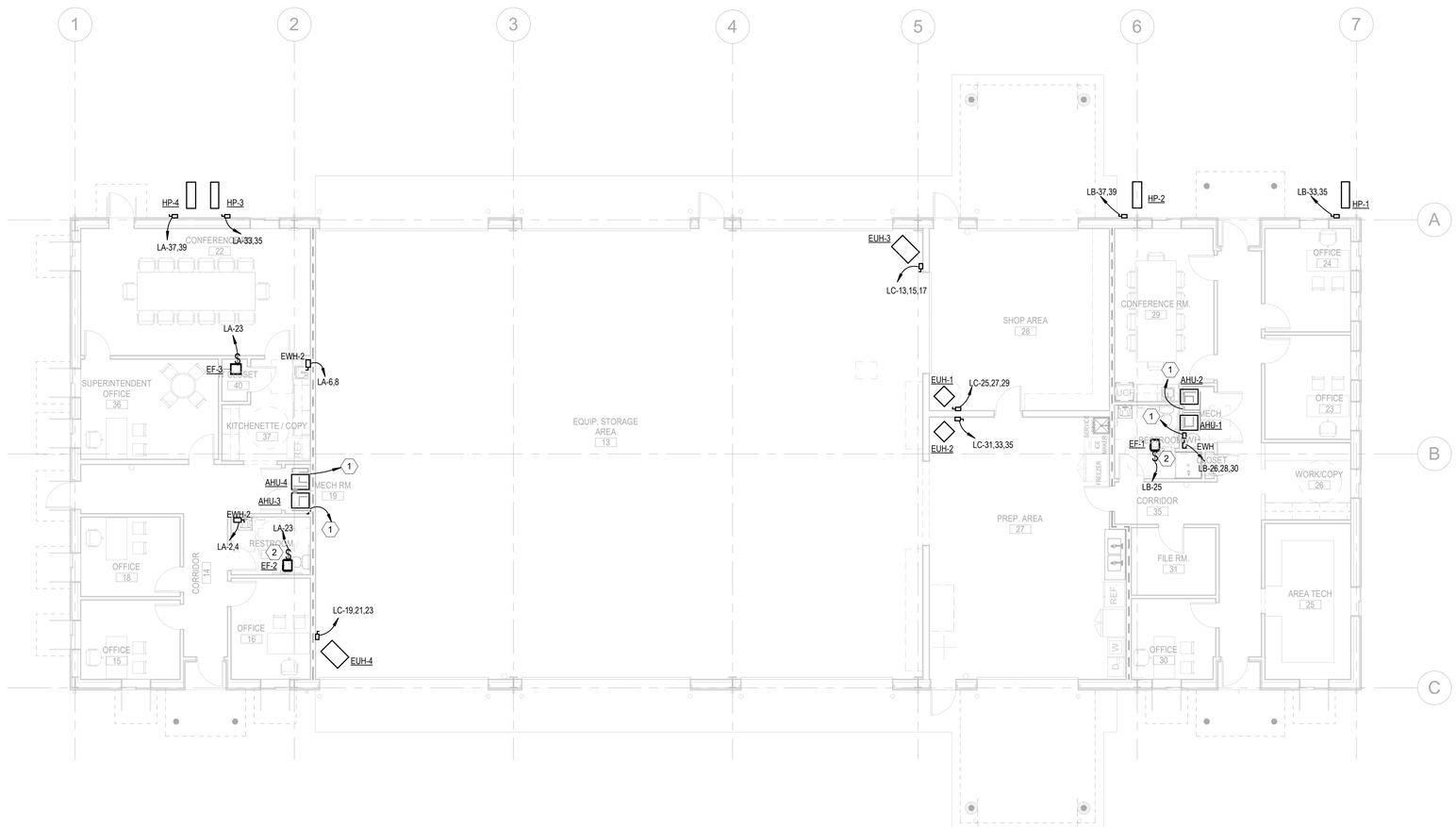

1 POWER HVAC EQUIPMENT PLAN

1/8" = 1'-0"

TEXAS PARKS & WILDLIFE

STATE OF TEXAS
ANDREW D. HUNTER
109975
LICENSED
PROFESSIONAL ENGINEER
04/23/2021

PDG ARCHITECTS

10000 RICHMOND
SUITE 100
HOUSTON, TX 77042
713-629-6100

MATHIS FISHERIES OFFICE
AT LAKE CORPUS CHRISTI, MATHIS, TEXAS
PROJECT NUMBER: 127144

DATE: 04-23-2021
DESIGNED BY: TA
DRAWN BY: Author
REVIEWED BY: Approver
REVISED:
REVISED:

SHEET TITLE
POWER EQUIPMENT PLAN

SHEET NUMBER
E2.02

PERCENTAGE: BID SET

PRESTIGE ENGINEERING SERVICES
TBPE Registration Number 18865
909 NE Loop 410, Suite 818
San Antonio, Texas 78209
210.686.0444
www.InfinityMEP.com

LIGHT FIXTURE SCHEDULE

DESIGNATION	FIXTURE DESCRIPTION	MODEL NUMBER	LAMP QUANTITY	LAMP TYPE	LAMP WATTS	VOLTAGE
A	2X4 LENSED TROFFER	LITHONIA: 2GTL4-48L-A12125-GZ10-LP835		LED	36	120
B	2X2 DIRECT/INDIRECT	LITHONIA: 2AVL2-20LSE-MDR-GZ10-LP835		LED	22	120
BE	2X2 DIRECT/INDIRECT WITH BATTERY PACK	LITHONIA: 2AVL2-20LSE-MDR-GZ10-LP835-EL14L		LED	22	120
C	4' CHAIN HUNG STRIP LIGHT	LITHONIA: CLX-L48-5000-SEF-RDL-MVOLT-GZ10-35K-80C RI-WH-HC36		LED	35	120
CE	4' CHAIN HUNG STRIP LIGHT WITH BATTERY PACK	LITHONIA: CLX-L48-5000-SEF-RDL-MVOLT-GZ10-35K-80C RI-WH-HC36-EL14L		LED	35	120
D	6" LENSED DOWNLIGHT	LITHONIA: LDN6-35/15-LO6AR-LSS-MVOLT-GZ10		LED	18	120
F	DOWLIGHT CYLINDER	LITHONIA: LDN6CYL-35/15-LO6AR-LSS-MVOLT-GZ10-XXX -DWHG		LED	18	120
G	WALL PACK WITH PHOTOCELL	LITHONIA: ARC2-LED-P2-40K-MVOLT-PE-DDBXD		LED	16	120
H	LINEAR LED STRIP LIGHT	LITHONIA: CSS L96 8000LM MVOLT 40K 80CRI		LED	72	120
S2	2 HEAD POLE LIGHT WITH PHOTOCELL	LITHONIA:	2	LED	130	120
S3	3 HEAD POLE LIGHT WITH PHOTOCELL	LITHONIA:	3	LED	130	120
X	EXIT SIGN WITH BATTERY PACK	LITHONIA: LQM-S-3-R-MVOLT-ELN		LED	1	120

GENERAL NOTES

A	REFER TO ARCHITECTURAL DRAWINGS FOR EXACT LOCATION AND MOUNTING HEIGHTS OF FIXTURES.
B	FIXTURES WITH BATTERY PACK SHALL HAVE NORMAL BALLAST CONNECTED TO LIGHT SWITCH, AND BATTERY BALLAST CONNECTED TO UN-SWITCHED POWER. BATTERY BALLAST IS SWITCHED AT PANEL ONLY. REFER TO MANUFACTURER WIRING DIAGRAM FOR INSTALLATION WITH FIXTURE NORMAL BALLAST.
C	EXIT SIGNS SHALL BE CONNECTED TO UN-SWITCHED POWER. EMERGENCY LIGHTS SHALL BE SWITCHED AT PANEL ONLY.
D	GANG ALL LIGHT SWITCHES TOGETHER WHERE POSSIBLE.
E	CONTRACTOR TO PROVIDE TESTING AND COMMISSIONING OF THE LIGHTING CONTROL SYSTEMS IN SCOPE IN ACCORDANCE WITH 2015 IECC SECTION C408. CONTRACTOR SHALL INCLUDE IN BID THE SERVICES OF A REGISTERED DESIGN PROFESSIONAL TO PRODUCE A COMMISSIONING PLAN TO CONFIRM TESTING AND CALIBRATION HAVE BEEN PERFORMED IN ACCORDANCE WITH THE CONSTRUCTION DOCUMENTS. COPIES OF ALL DOCUMENTATION SHALL BE GIVEN TO THE OWNER OR OWNER'S AUTHORIZED AGENT WITHIN 90 DAYS OF RECEIPT OF CERTIFICATE OR OCCUPANCY AND MADE AVAILABLE TO CODE OFFICIAL UPON REQUEST IN ACCORDANCE WITH SECTIONS C408.3.1.1 AND C408.3.1.2.

KEYNOTES

KEYNOTE	DESCRIPTION
1	HOMERUN EXTERIOR LIGHTING VIA TIMECLOCK AND PHOTOCELL.

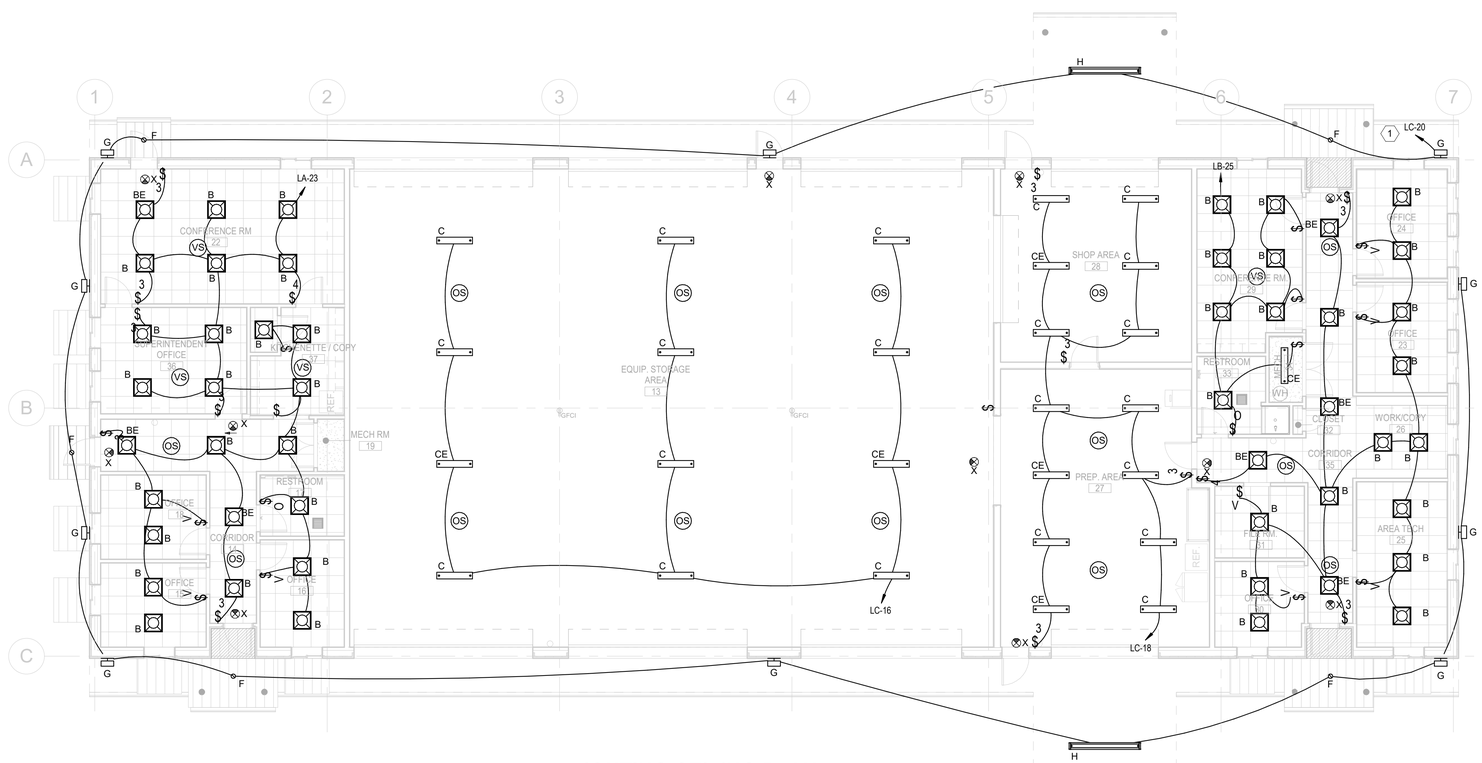

1 LIGHTING CEILING PLAN

1/8" = 1'-0"

PRESTIGE ENGINEERING SERVICES
TBPE Registration Number 18865
909 NE Loop 410, Suite 818
San Antonio, Texas 78209
210.686.0444
www.InfinityMEP.com

TEXAS PARKS & WILDLIFE

STATE OF TEXAS
ANDREW D. HUNTER
109975
LICENSED
PROFESSIONAL ENGINEER
04/23/2021

PDG ARCHITECTS
10000 RICHMOND
SUITE 100
HOUSTON, TX 77042
713-629-6100

MATHIS FISHERIES OFFICE
AT LAKE CORPUS CHRISTI, MATHIS, TEXAS
PROJECT NUMBER: 127144

DATE:	04-23-2021
DESIGNED BY:	TA
DRAWN BY:	Author
REVIEWED BY:	Approver
REVISED:	
REVISED:	

SHEET TITLE
LIGHTING PLAN

SHEET NUMBER
E3.01

PERCENTAGE: BID SET

KEYNOTES

KEYNOTE	DESCRIPTION
1	PROVIDE INTERMATIC EI205 ELECTRONIC COUNTDOWN TIMER WITH WEATHERPROOF COVER.

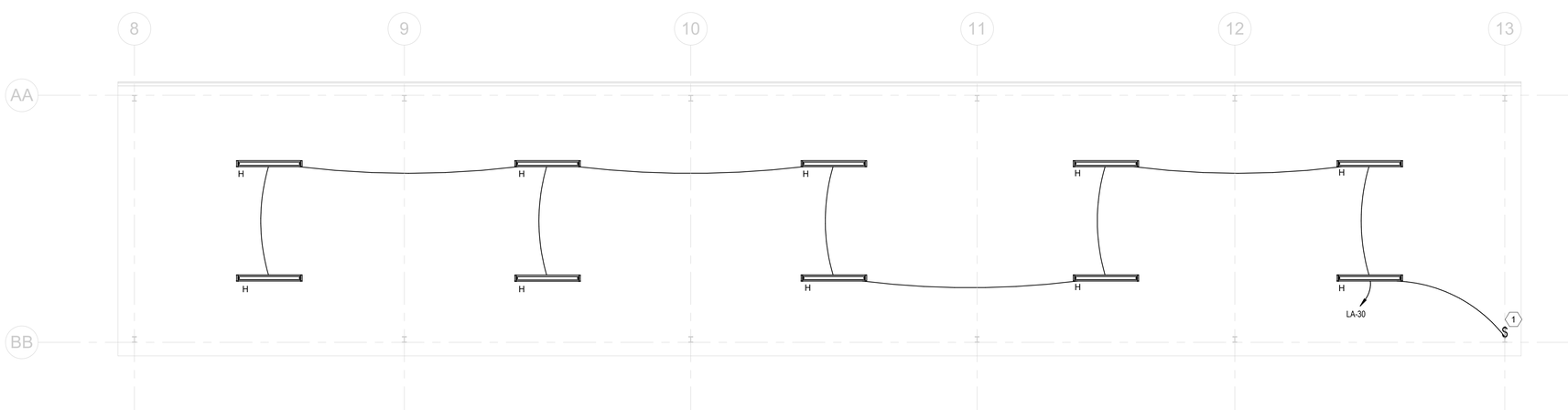

1 **POLE BARN LIGHTING PLAN**
1/8" = 1'-0"

PRESTIGE ENGINEERING SERVICES
TBPE Registration Number 18865
909 NE Loop 410, Suite 818
San Antonio, Texas 78209
210.686.0444
www.InfinityMEP.com

TEXAS PARKS & WILDLIFE

STATE OF TEXAS
ANDREW D. HUNTER
109975
LICENSED
PROFESSIONAL ENGINEER
04/23/2021

PDG ARCHITECTS
10000 RICHMOND
SUITE 100
HOUSTON, TX 77042
713-629-6100

MATHIS FISHERIES OFFICE
AT LAKE CORPUS CHRISTI, MATHIS, TEXAS
PROJECT NUMBER: 127144

DATE:	04-23-2021
DESIGNED BY:	TA
DRAWN BY:	Author
REVIEWED BY:	Approver
REVISED:	
REVISED:	

SHEET TITLE
LIGHTING PLAN

SHEET NUMBER
E3.02

PERCENTAGE: BID SET

TELECOM SCOPE OF WORK

ELEC/DATA ROOM/AREA:

1. CONTRACTOR TO INSTALL FIRE RETARDANT GRADE PLYWOOD TO SERVE AS THE IT BACKBOARD. IF SPACE ALLOWS INSTALL A 4'X8' SHEET AND IF NOT INSTALL A 4'X4' SHEET.
2. CONTRACTOR TO INSTALL A DEDICATED QUAD RECEPTACLE AT THE LOCATION OF THE NEW BACKBOARD/RACK. PLEASE PROVIDE A DEDICATED CIRCUIT FOR THIS QUAD.
3. CONTRACTOR TO PROVIDE AND INSTALL A 19" PANDUIT 10U OPEN-FRAME RACK MOUNTED ON THE IT BACKBOARD FOR IT EQUIPMENT BE MOUNTED ON. THE RACK SHOULD BE MOUNTED (CENTERED) APPROXIMATELY 5' TO 6' ABOVE FINISHED FLOOR. A FREE STANDING RACK OF SAME SPECS MAY BE USED IF WALL SPACE IS LIMITED.
4. PROVIDE AND INSTALL ONE PANDUIT PATCH PANEL INTO THE RACK NOTED ABOVE. SIZE AND SPEC THE PATCH PANEL TO COVER THE ALL OF THE JACKS DESIGNED PLUS 20% SPARE CAPACITY FOR FUTURE.
5. PROVIDE COPPER GROUNDING PLATE ON BACKBOARD AS REQUIRED FOR THE RACK AND ASSOCIATED HARDWARE TO BE GROUNDED ON. GROUND PLATE TO BUILDING GROUND OR DERIVED GROUND AS REQUIRED TO MEET NEC CODE AND MOTOROLA R56 STANDARDS. GROUND THE NEW RACK TO THE NEW PLATE.

NETWORK CABLING:

1. ALL NETWORK CABLING SHALL BE CAT6. ALL CAT6 NETWORK CABLING SHALL TERMINATE ON CAT6 KEYSTONE ON WALL PLATES, AND ON CAT6 PATCH PANEL IN THE ELEC/DATA ROOM. LEAVE ENOUGH SLACK IN CABLES AT THE PATCH PANEL TO ACCOMMODATE FUTURE MOVEMENT OF THE CABLES BETWEEN PATCH PANEL AND OTHER MODULES TO BE INSTALLED BY TPWD. BOTH ENDS OF THE CAT6 CABLES ARE TO BE TERMINATED TO 568B WIRING STANDARDS.
2. CONTRACTOR TO PROVIDE AND INSTALL 1" CONDUITS AND BOXES IN WALLS TO EACH OF THE DROPS WITH CAT6 CABLE FROM IT BACKBOARD TO EACH RJ-45 KEYSTONE DATA OUTLETS. WALL PLATE IS TO ACCOMMODATE THE TOTAL OF TWO (2) RJ-45 OUTLETS.
3. IF APPLICABLE, CONTRACTOR TO ALSO PROVIDE AND INSTALL A CAT6 CABLE AND CONDUIT FROM PATCH PANEL TO THE FIRE ALARM CONTROL PANEL.
4. ALL NETWORK CABLING SHALL BE RUN IN THE CEILING AND SUSPENDED WITH EITHER J-HOOKS AND/OR A CABLE TRAY AN NO CABLING SHALL BE STRUNG ACROSS LIGHT FIXTURES. AVOID CLOSE PROXIMITY TO POWER CABLES AND LIGHT BALLASTS.
5. LABEL THE CABLE WITH THEIR DESTINATIONS AT EACH AND EVERY TERMINATION POINT (TO ENSURE THAT BOTH THE ENDS OF THE CABLE ARE LABELED FOR IDENTIFICATION AND TRACEABILITY.)
6. ALL NETWORK CABLES MUST BE TESTED AND CERTIFIED AFTER THEY HAVE BEEN TERMINATED.
7. AT EACH OF THE RJ-45 DROPS, PROVIDE A PANDUIT DUAL PORT RJ-45 WALL PLATE FOR CONNECTION OF TWO (2) CAT-6 CIRCUITS, ONE FOR PHONE AND ONE FOR DATA. CONNECT THE CAT-6 CABLES TO DUAL PORT RJ-45 WALL PLATES PER MANUFACTURER'S INSTRUCTIONS (568B WIRING STANDARDS). CABLES ARE TO BE RUN IN A NEAT AND ORDERLY FASHION. AVOID PROXIMITY TO POWER CABLES AND LIGHT BALLASTS AS MUCH AS POSSIBLE.
8. IN THE IT CLOSET/AREA, PUNCH DOWN/INSTALL THE RJ-45 ENDS ONTO ALL CABLES (568B WIRING STANDARDS). LEAVE A SUITABLE AMOUNT OF SLACK IN CABLES FOR MOVEMENT AROUND THE PATCH PANEL IN THE FUTURE IF NECESSARY.
9. TEST ALL CABLES TO ENSURE 10/100/1000 MEGABIT SUITABILITY USING INDUSTRY STANDARDS AND EQUIPMENT. PROVIDE OWNER WITH TEST RESULTS SHOWING THAT ALL CABLES AND CONNECTIONS ARE SOUND.
10. ALL CABLES AND JACKS SHOULD BE LABELED FOR PROPER IDENTIFICATION AT EACH END.
11. CONNECT ALL CABLES TO NEW PATCH PANEL IN THE IT CLOSET/AREA AND FINISH MOUNT THE RJ-45 WALL PLATES TO THE BOX AT ALL LOCATIONS.
12. IF WIRELESS ACCESS POINTS (WAP) ARE REQUIRED, PLEASE INSTALL A RJ-45 JACK AT THE APPROPRIATE LOCATION WIRED BACK TO PATCH PANEL AND TPWD WILL INSTALL THE WAP.

SUBMITTALS:

1. CONTRACTOR TO PROVIDE FOLLOWING SUBMITTALS FOR OWNER'S REVIEW AND ACCEPTANCE PRIOR TO INSTALLATION:
   1. PANDUIT 10U OPEN-FRAME RACK
   2. PANDUIT PATCH PANEL
   3. RJ-45 KEYSTONE DATA OUTLETS
   4. CAT 6 CABLE
   5. GROUND PLATE
2. CONTRACTOR TO PROVIDE FOLLOWING SUBMITTAL FOR OWNER'S REVIEW AND ACCEPTANCE:
   A. CONTINUITY TEST RESULTS OF CABLES.

KEYNOTES

KEYNOTE	DESCRIPTION
1	PROVIDE 4" CONDUIT BETWEEN TELECOM ROOM AND COORIDOR FOR TELECOM CABLING. PROVIDE 4" CONDUIT BETWEEN SPACES FOR FIRE ALARM CABLING.
2	1-1/2" CONDUIT STUBBED UP TO ACCESSIBLE WALL.

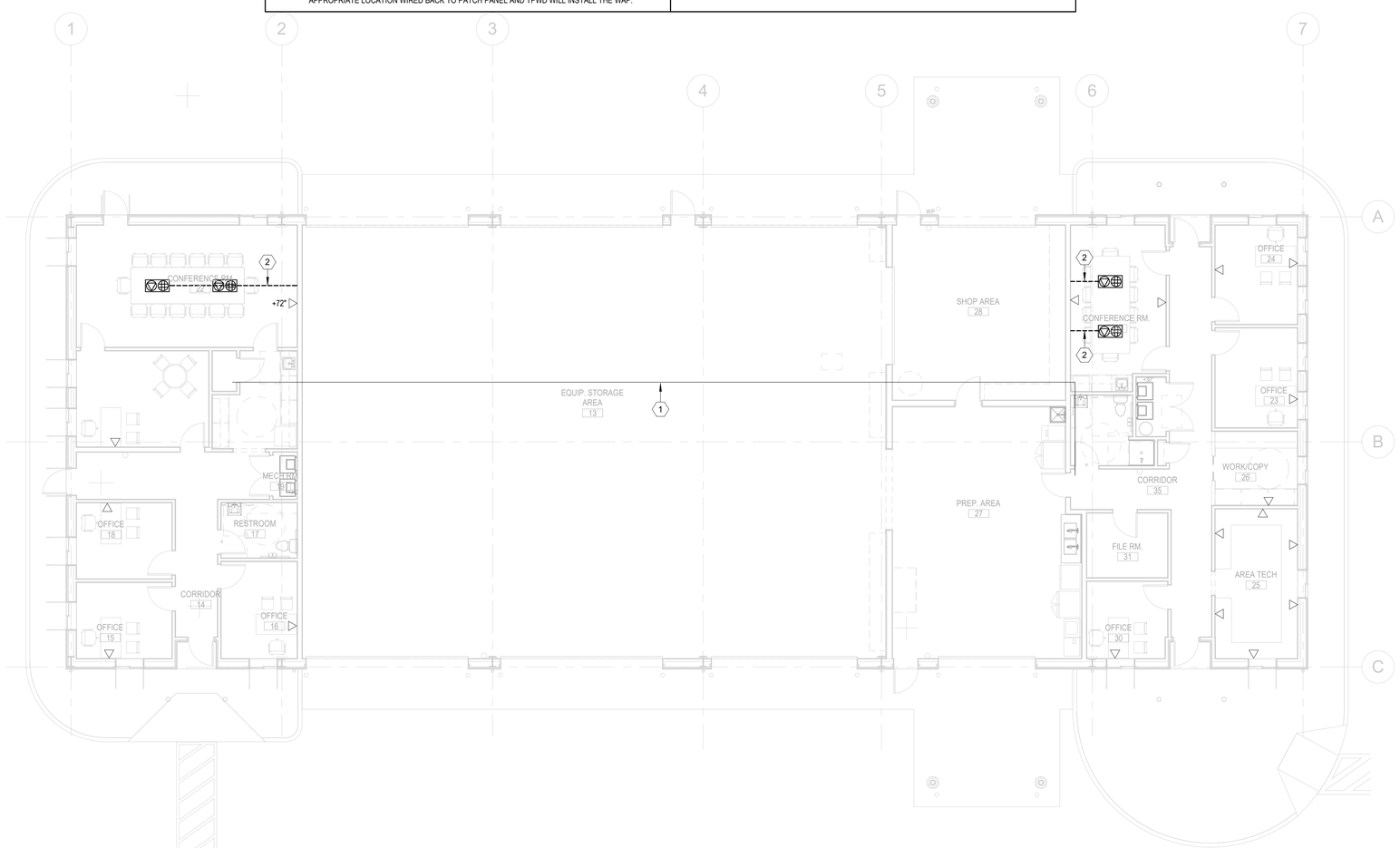

1 LOW VOLTAGE PLAN

1/8" = 1'-0"

PRESTIGE ENGINEERING SERVICES
TBPE Registration Number 18865
909 NE Loop 410, Suite 818
San Antonio, Texas 78209
210.686.0444
www.InfinityMEP.com

TEXAS PARKS & WILDLIFE

STATE OF TEXAS
ANDREW D. HUNTER
109975
LICENSED
PROFESSIONAL ENGINEER
04/22/2021

PDG ARCHITECTS
10000 RICHMOND
SUITE 100
HOUSTON, TX 77042
713-629-6100

MATHIS FISHERIES OFFICE
AT LAKE CORPUS CHRISTI, MATHIS, TEXAS
PROJECT NUMBER: 127144

DATE:	04/22/21
DESIGNED BY:	TA
DRAWN BY:	Author
REVIEWED BY:	Approver
REVISED:	
REVISED:	

SHEET TITLE
LOW VOLTAGE PLAN

SHEET NUMBER
E4.01

PERCENTAGE: BID SET

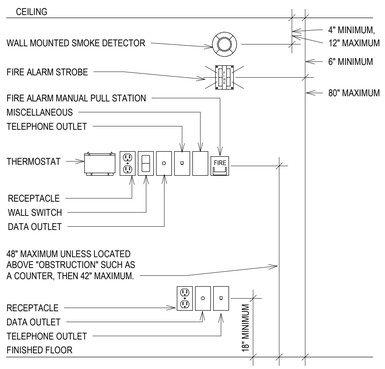

NOTE:
ALL DEVICES SHOWN MAY NOT BE USED. DETAIL INDICATES TYPICAL MOUNTING HEIGHTS ONLY.

6 MOUNTING HEIGHT DETAIL
NOT TO SCALE

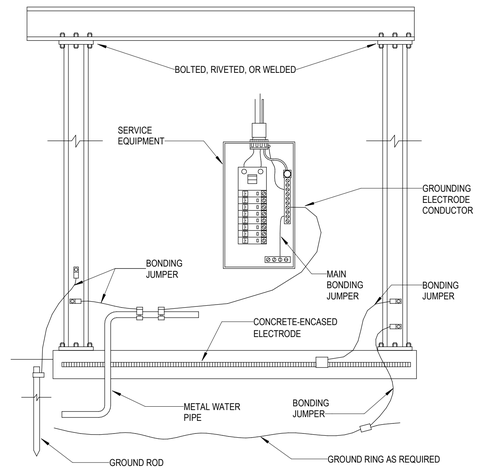

4 GROUNDING ELECTRODE SYSTEM DETAIL
NOT TO SCALE

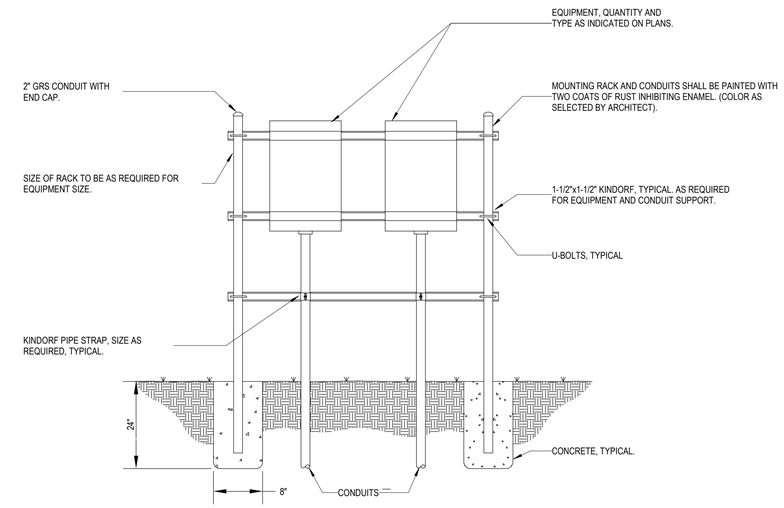

2 EQUIPMENT RACK MOUNTED AT GRADE UNISTRUT DETAIL
NOT TO SCALE

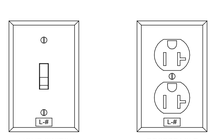

L-# CIRCUIT LABEL
L = PANEL DESIGNATION
# = CIRCUIT DESIGNATION

5 DEVICE PLATES - CIRCUIT LABEL
NOT TO SCALE

FIRE ALARM NOTES:
1. ALL EQUIPMENT TO BE PROVIDED BY SIMPLEX TIME RECORDER CO., OR APPROVED EQUAL.
2. PROVIDE ADDRESSABLE FIRE ALARM PANEL.
3. PROVIDE COMPLETE SCHEMATIC FIRE ALARM WIRING DIAGRAM AS PART OF SHOP DRAWING SUBMITTALS.

FIRE ALARM SYMBOLS:
- S — SMOKE DETECTOR
- H — HEAT DETECTOR
- F — FIRE ALARM PULL STATION
- SD — DUCT MTD. SMOKE DETECTOR
- FS — SPRINKLER SYS. FLOW SWITCH
- TS — TAMPER SYS. FLOW SWITCH

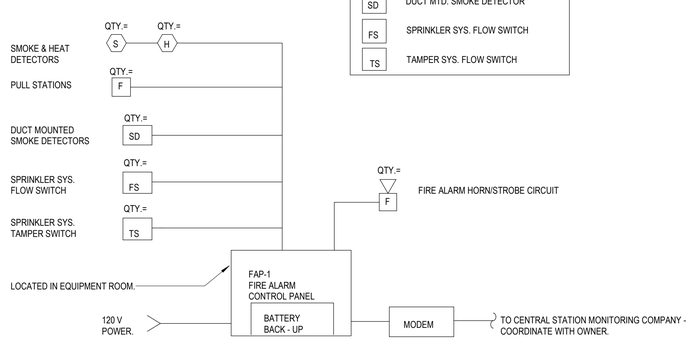

3 FIRE ALARM RISER DIAGRAM (ADDRESSABLE SYSTEM)
NOT TO SCALE

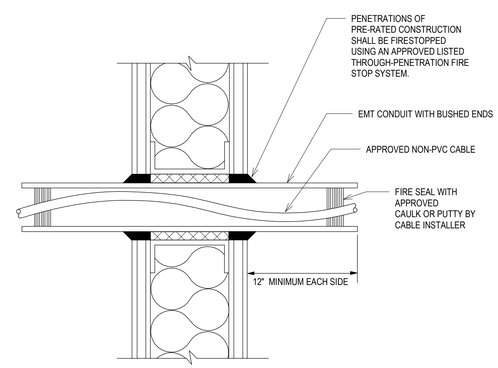

NOTE:
TYPICAL FOR ALL LOW VOLTAGE WIRING

1 CONDUIT PENETRATION OF RATED PARTITION / WITH CABLE
NOT TO SCALE

TEXAS PARKS & WILDLIFE

STATE OF TEXAS
ANDREW D. HUNTER
109975
LICENSED
PROFESSIONAL ENGINEER
04/23/2021

PDG ARCHITECTS
10000 RICHMOND
SUITE 100
HOUSTON, TX 77042
713-629-6100

MATHIS FISHERIES OFFICE
AT LAKE CORPUS CHRISTI, MATHIS, TEXAS
PROJECT NUMBER: 127144

DATE:	04-23-2021
DESIGNED BY:	TA
DRAWN BY:	Author
REVIEWED BY:	Approver
REVISED:	
REVISED:	

SHEET TITLE
ELECTRICAL DETAILS

SHEET NUMBER
E6.01

PERCENTAGE: BID SET

PRESTIGE ENGINEERING SERVICES
TBPE Registration Number 18865
909 NE Loop 410, Suite 818
San Antonio, Texas 78209
210.686.0444
www.InfinityMEP.com

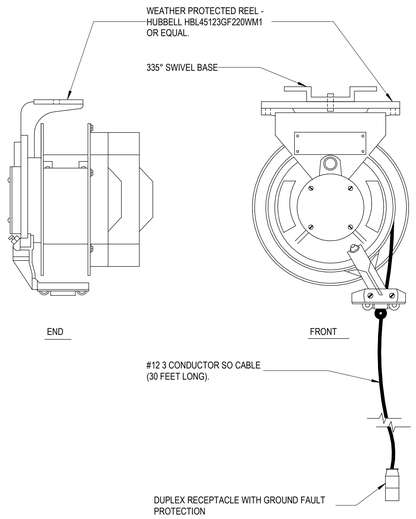

3 UTILITY CORD REEL DETAIL

NOT TO SCALE

NOTES:

1. INSTALL A NEMA 4X NON-METALLIC JUNCTION BOX WITH AN ALUMINUM BACKING PLATE BELOW THE CONTROL PANEL ON THE SAME COMMON RACK SYSTEM. SIZE BOX PER N.E.C. FOR THE CONDUIT SIZES AND NUMBER OF CONDUCTORS & TERMINATIONS IN THE BOX. ALL POWER, CONTROL, AND GROUNDING TERMINAL BLOCKS SHALL HAVE A SUFFICIENT NUMBER AND SIZE OF TERMINATION POINTS FOR SINGLE POINT CONNECTION OF ALL CONDUCTORS.

   A. INSTALL TERMINAL BLOCKS ON THE BACK PANEL OF THE J-BOX.

   B. THE TERMINAL BLOCKS SHALL BE PRESSURE PLATE DIN RAIL TYPE TERMINAL BLOCKS AND THESE SHALL BE USED FOR THE TERMINATION OF ANY SINGLE-CONDUCTOR CONTROL PANEL WIRING THAT ROUTES TO THE WET WELL AND FOR THE WIRES IN THE CABLES FROM THE FLOAT SWITCHES AND PUMPS IN THE WET WELL.

   C. ALL POWER, CONTROL, AND GROUNDING TERMINAL BLOCKS SHALL HAVE A SUFFICIENT NUMBER AND SIZE OF TERMINATION POINTS FOR SINGLE POINT CONNECTION OF ALL CONDUCTORS. PROVIDE THE TERMINAL BLOCK MANUFACTURER'S JUMPER TABS FOR ANY TERMINATIONS THAT REQUIRE MULTIPLE WIRE CONNECTIONS SUCH AS GROUND WIRES.

   D. PROVIDE A SEPARATE GROUND BUSS FOR THE TERMINATION OF ALL EQUIPMENT GROUNDING CONDUCTORS.

   E. PERMANENTLY IDENTIFY THE TERMINAL BLOCKS AND THE CONDUCTORS WITH WIRE MARKERS EQUAL TO BRADY. THE IDENTIFICATION NUMBERING SHALL MATCH THE WIRE NUMBERS SHOWN ON THE CONTROL PANEL FABRICATOR'S SCHEMATIC DIAGRAM FOR THE CONTROL PANEL.

2. FOR THESE TWO CONDUITS: INSTALL SCHEDULE 80 PVC CONDUIT BETWEEN THE CONTROL PANEL AND WET WELL AT THE DEPTHS SPECIFIED IN THE TRENCHING DETAILS FOR ELECTRICAL CONDUIT.

3. PROVIDE RMC NIPPLES WITH A CONDUIT SEAL FITTING (TO BE FILLED WITH CHICO SEALING COMPOUND) BETWEEN THE J-BOX AND CONTROL PANEL. SINGLE CONDUCTORS SHALL BE INSTALLED FROM THE CONTROL PANEL TO THE JUNCTION BOX TERMINAL STRIPS AND GROUND BUSS. COAT THE EXPOSED PORTIONS OF THE CONDUIT NIPPLES WITH COLD GALVANIZING COMPOUND.

4. IN THE J-BOX AND IN THE WET WELL: SEAL THE CONDUITS FROM THE J-BOX TO THE WET WELL WITH DUCT SEAL OR HARD SETTING CLOSED CELL FOAM TO PREVENT THE TRANSMISSION OF CORROSIVE GASES FROM THE WET WELL.

5. ALL HARDWARE FOR CONDUIT SUPPORT, ENCLOSURE MOUNTING, RACK ASSEMBLY & FABRICATION OR FOR OTHER NEEDS SHALL BE STAINLESS STEEL. ALL CONDUIT & CONDUIT FITTINGS SHALL BE PVC UNLESS NOTED OTHERWISE. NO METAL CONDUIT, METAL ENCLOSURES, METAL RACK MATERIALS OR OTHER METAL ITEMS SHALL BE INSTALLED FOR THE LIFT STATION CONTROL PANEL INSTALLATION OTHER THAN THE STAINLESS STEEL HARDWARE.

6. INSTALL A NEMA 4X, NON-METALLIC JUNCTION BOX WITH AN ALUMINUM INTERIOR BACK PANEL FOR THE PROPER TERMINATION OF THE POWER WIRING AND LIGHTNING/SURGE PROTECTION WIRING FOR THE LIFT STATION. THE JUNCTION BOX SHALL BE SIZED PER N.E.C. TO PROPERLY ACCEPT THE NUMBER AND SIZES OF WIRING INSTALLED IN THE BOX. ALL TERMINAL BLOCKS INSTALLED IN THIS JUNCTION BOX SHALL HAVE A SUFFICIENT NUMBER AND SIZE OF TERMINATION POINTS FOR SINGLE POINT CONNECTION OF ALL CONDUCTORS. PERMANENTLY IDENTIFY EACH GROUP OF POWER TERMINAL BLOCKS TO SHOW THE USE OF THE BLOCKS. PERMANENTLY IDENTIFY THE CONDUCTORS WITH WIRE MARKERS EQUAL TO BRADY. INSTALL THE FOLLOWING ON THE INTERIOR BACK PANEL:

   A. PRESSURE PLATE DIN RAIL TERMINAL BLOCKS OR POWER TERMINAL BLOCKS FOR THE TERMINATION OF THE POWER WIRING, SURGE PROTECTOR WIRING, AND LIGHTING ARRESTOR WIRING.
   B. EQUIPMENT GROUND BAR.
   C. ISOLATED GROUND BAR FOR GROUNDING ELECTRODE CONDUCTOR, SURGE PROTECTOR, AND LIGHTNING ARRESTOR GROUND. NOTE: THIS ENTIRE SYSTEM MUST BE ISOLATED.
   D. MOUNT THE SURGE PROTECTOR AND THE LIGHTING ARRESTOR TO THE BOTTOM OF THE JUNCTION BOX.
   E. INSTALL 1/2" PVC FOR THE #6 AWG, INSULATED GROUNDING ELECTRODE CONDUCTOR (GEC). ATTACHMENT THE GEC TO THE GROUND ROD USING AN EXOTHERMIC WELD.
   F. SUPPLY A COMMERCIAL GRADE LIGHTNING PROTECTOR WITH NEUTRAL AND GROUND WIRES AND SUPPLY A SURGE CAPACITOR WITH NEUTRAL AND GROUND WIRES AS DETERMINED BY THE VOLTAGE RATING OF THE ELECTRICAL SERVICE TO THE LIFT STATION EQUIPMENT. IF THE POWER SUPPLY IS 120/240 VAC, SINGLE PHASE: INSTALL DELTA LIGHTNING ARRESTORS MODEL #LA 302G LIGHTNING PROTECTOR WITH NEUTRAL AND GROUND AND MODEL #CA 302RG SURGE CAPACITOR. IF THE POWER SUPPLY IS 3-PHASE INSTALL THE CORRESPONDING 3-PHASE, DELTA LIGHTNING ARRESTOR BRAND OR EQUAL LIGHTNING ARRESTOR AND SURGE CAPACITOR.

7. THE NEW DOUBLE-THROW, NON-FUSED DISCONNECT SWITCH SHALL MATCH THE RATING OF THE PUMPING SYSTEM AND SHALL BE SUPPLIED WITH A SOLID NEUTRAL BAR AND A SEPARATE GROUND BUSS. SUPPLY THIS SWITCH IN A NEMA 4X, STAINLESS STEEL ENCLOSURE. CONNECT THE NORMAL POWER FEED TO THE TOP OF THE SWITCH. THE GENERATOR RECEPTACLE FEED TO THE BOTTOM OF THE SWITCH, AND THE LOAD WIRING TO THE CENTER CONNECTIONS IN THE SWITCH.

8. THE NEW GENERATOR RECEPTACLE SHALL MATCH THE RATING OF THE PUMPING SYSTEM. THE RECEPTACLE SHALL BE A PIN AND SLEEVE STYLE RECEPTACLE OR TWIST-LOCK STYLE RECEPTACLE WITH A SEPARATE GROUND CONNECTION. PIN AND SLEEVE RECEPTACLES SHALL HAVE STYLE 2 CONNECTIONS PROVIDING FOR A SEPARATE GROUND WIRE PIN CONNECTION IN THE RECEPTACLE AND IN THE MATING PLUG. THE GENERATOR RECEPTACLE SHALL BE SUPPLIED IN A WEATHERPROOF, NON-METALLIC BOX WITH A WEATHERPROOF, NON-METALLIC COVER.

9. THE NEW GENERATOR RECEPTACLE SHALL MATCH THE MATING PLUG THAT IS INSTALLED ON TPWD'S EXISTING TRAILER MOUNTED GENERATOR. THE CONTRACTOR SHALL COORDINATE THAT THE LIFT STATION GENERATOR RECEPTACLE MATES WITH TPWD'S GENERATOR MATING PLUG.

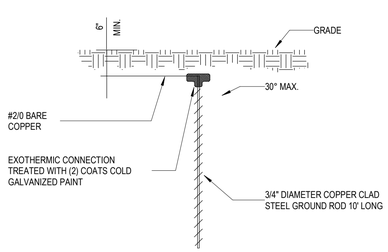

2 TYPICAL GROUND ROD INSTALLATION

NOT TO SCALE

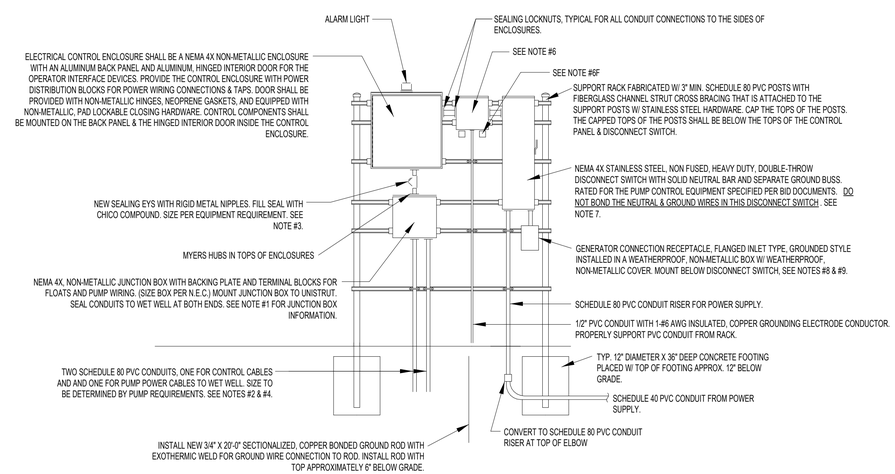

1 LIFT STATION DETAIL

NOT TO SCALE

TEXAS PARKS & WILDLIFE

STATE OF TEXAS
ANDREW D. HUNTER
109975
LICENSED
PROFESSIONAL ENGINEER
04/23/2021

PDG ARCHITECTS
10000 RICHMOND
SUITE 100
HOUSTON, TX 77042
713-629-6100

MATHIS FISHERIES OFFICE
AT LAKE CORPUS CHRISTI, MATHIS, TEXAS
PROJECT NUMBER: 127144

DATE: 04-23-2021
DESIGNED BY: TA
DRAWN BY: Author
REVIEWED BY: Approver
REVISED:
REVISED:

SHEET TITLE
ELECTRICAL DETAILS

PRESTIGE ENGINEERING SERVICES
TBPE Registration Number 18865
909 NE Loop 410, Suite 818
San Antonio, Texas 78209
210.686.0444
www.InfinityMEP.com

SHEET NUMBER
E6.02

PERCENTAGE: BID SET

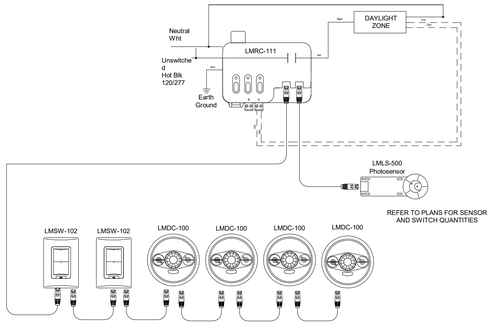

ADJUST AND PROGRAM SYSTEM FOR SEQUENCE OF OPERATION:
1. Lighting shall be scheduled by astronomic timeclock.
2. Lighting shall have 2 hour override after hours.

2 WATTSTOPPER TYPICAL OPEN OFFICE AND CORRIDOR

NOT TO SCALE

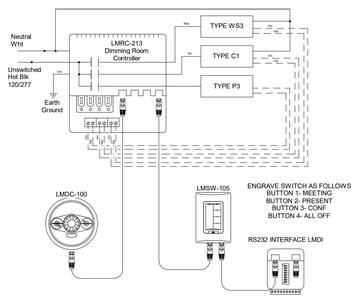

ADJUST AND PROGRAM SYSTEM FOR SEQUENCE OF OPERATION:
1. LIGHTING LOADS SHALL BE MANUAL ON.
2. LIGHTING LOADS SHALL BE AUTO-OFF AFTER 20 MINS OF NO MOTION.
3. LIGHTING LOADS SHALL BE ABLE TO BE CONTROLLED BY AV SYSTEM VIA RS232 INTERFACE.

1 WATTSTOPPER MEETING ROOM

NOT TO SCALE

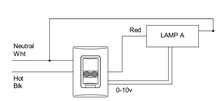

ADJUST AND PROGRAM SYSTEM FOR SEQUENCE OF OPERATION:
1. Lighting shall be manual on and automatically off after 20 mins of no motion detection.

3 WATTSTOPPER TYPICAL SMALL OFFICE

NOT TO SCALE

TEXAS PARKS & WILDLIFE

STATE OF TEXAS
ANDREW D. HUNTER
109975
LICENSED
PROFESSIONAL ENGINEER
04/23/2021

PDG ARCHITECTS

10000 RICHMOND
SUITE 100
HOUSTON, TX 77042
713-629-6100

MATHIS FISHERIES OFFICE

AT LAKE CORPUS CHRISTI, MATHIS, TEXAS

PROJECT NUMBER: 127144

DATE: 04-23-2021
DESIGNED BY: TA
DRAWN BY: Author
REVIEWED BY: Approver
REVISED:
REVISED:

SHEET TITLE

ELECTRICAL DETAILS

SHEET NUMBER

E6.03

PERCENTAGE: BID SET

PRESTIGE ENGINEERING SERVICES
TBPE Registration Number 18865
909 NE Loop 410, Suite 818
San Antonio, Texas 78209
210.686.0444
www.InfinityMEP.com

GENERAL NOTES

A	ALL NEW WIRES SHALL HAVE THHN/THWN INSULATION.
B	MC CABLE IS NOT ALLOWED EXCEPT FOR FIXTURE WHIPS. ALL WIRE SHALL BE IN EMT UNLESS NOTED OTHERWISE.

KEYNOTES

KEYNOTE	DESCRIPTION
1	PANELBOARD SHALL HAVE BRANCH CIRCUIT MONITORING. PROVIDE (3) THREE-PHASE METERS INSIDE PANEL BOARD TO METER CIRCUITS. METER #1 SHALL METER FEED THRU TO PANEL LB . METER #2 SHALL METER LIFT STATION, SITE LIGHTING, AND GATE POWER. METER #3 SHALL METER ALL OTHER LOADS ON PANEL LA.
2	TYPE 1 SPD.

LA

NEW

LIGHTING PANELBOARD

FULL SIZE NEUTRAL, W/ COPPER GROUND BUS
3R NEMA ENCLOSURE
X FEED THRU LUGS
SURFACE MOUNTING

400 AMP MCB
208 VOLT P-P
120 VOLT P-N
3 PHASE
4 WIRE
22000 A/C SYMMETRICAL

400 AMP BUS RATING

C PH (AMP)	B PH (AMP)	A PH (AMP)	LOAD (VA)	TYPE	DESCRIPTION	CKT BKR AMP	/P		NO		NO	CKT BKR AMP	/P	DESCRIPTION	TYPE	LOAD (VA)	A PH (AMP)	B PH (AMP)	C PH (AMP)
	7.5	900		RP	CONFERENCE 5 DUPLEX	20	/1	1	A	2	60	/2		EWH-2	MN	7500	36.1		
7.5		900		RP	CONFERENCE 5 DUPLEX	20	/1	3	B	4					MN			36.1	
6.0		720		RP	SUPER OFFICE 4 DUPLEX	20	/1	5	C	6	60	/2		EWH-2	MN	7500			36.1
	5.0	600		RP	FRIDGE	20	/1	7	A	8					MN		36.1		
10.0		1200		RP	BREAKROOM DUPLEX	20	/1	9	B	10				SPACE					
10.5		1260		RP	OFFICE 7 DUPLEX	20	/1	11	C	12				SPACE					
	6.0	720		RP	OFFICE 4 DUPLEX	20	/1	13	A	14				SPACE					
3.0		360		RP	RESTROOM 2 DUPLEX	20	/1	15	B	16				SPACE					
6.7		800		RP	PRINTER	20	/1	17	C	18				SPACE					
	6.7	800		RP	PRINTER	20	/1	19	A	20				SPACE					
4.2		500		RP	IT	20	/1	21	B	22				SPACE					
5.0		605		LT	EF-2, LIGHTING	20	/1	23	C	24				SPACE					
	6.7	800		RP	DUPLEX	20	/1	25	A	26				SPACE					
6.7		800		RP	DUPLEX	20	/1	27	B	28				SPACE					
					SPACE			29	C	30	20	/1		POLE BARN LIGHTING	OL	720			6.0
					SPACE			31	A	32	20	/1		GATE	MM	400	3.3		
	25.6		5325	H	HP-3	40	/2	33	B	34	20	/1		METER REFERENCE					
25.6				H				35	C	36	20	/1		GATE	MM	800			6.7
	16.0	3328		H	HP-4	30	/2	37	A	38	40	/3		LIFT STATION	MM	6184	17.2		
16.0				H				39	B	40					MM			17.2	
					SPACE			41	C	42					MM				17.2

CONNECTED LOADS

C PH (AMP)	B PH (AMP)	A PH (AMP)	LOAD (VA)	TYPE	DESCRIPTION
134.5	166.5	115.3	47306	H	ELECTRIC HEAT
				C	A/C REFRIGERATION
37.2	27.2	27.2	10984	MM	MISC. MOTORS
6.0		2.5	1024	OL	OUTDOOR LIGHTING
9.1	3.5	5.1	2122	LT	INDOOR LIGHTING
113.0	103.1	126.5	39688	RP	RECEPTACLES
				EX	EXISTING DEMAND
				MC	MISC. CONTINUOUS
90.5	99.7	142.0	36950	MN	MISC. NON-CONTINUOUS
				KT	KITCHEN EQUIPMENT
390.2	399.9	418.5	138074		*** TOTAL ***
17.2	17.2	17.2	6184		LARGEST MOTOR

NEC DEMAND LOADS

DEMAND FACTOR	TYPE	DESCRIPTION	LOAD (VA)	N (AMP)	A PH (AMP)	B PH (AMP)	C PH (AMP)
1.00	H	ELECTRIC HEAT	47306		115.3	166.5	134.5
0.00	C	A/C REFRIGERATION					
1.00	MM	MISC. MOTORS	10984		27.2	27.2	37.2
1.25	OL	OUTDOOR LIGHTING	1280		3.2		7.5
1.25	LT	INDOOR LIGHTING	2653		6.3	4.4	11.4
220.44	RP	RECEPTACLES	24844		76.4	62.3	68.2
1.25	EX	EXISTING DEMAND					
1.25	MC	MISC. CONTINUOUS					
1.00	MN	MISC. NON-CONTINUOUS	36950		142.0	99.7	90.5
0.65	KT	KITCHEN EQUIPMENT					
LB		FEED-THRU		INCLUDED IN TYPES			
0.25		LARGEST MOTOR	1546		4.3	4.3	4.3
		*** TOTAL ***	125562	18	374.6	364.3	353.5

LB

NEW

LIGHTING PANELBOARD

FULL SIZE NEUTRAL, W/ COPPER GROUND BUS
3R NEMA ENCLOSURE
X FEED THRU LUGS
SURFACE MOUNTING

400 AMP MLO
208 VOLT P-P
120 VOLT P-N
3 PHASE
4 WIRE
22000 A/C SYMMETRICAL

400 AMP BUS RATING

C PH (AMP)	B PH (AMP)	A PH (AMP)	LOAD (VA)	TYPE	DESCRIPTION	CKT BKR AMP	/P		NO		NO	CKT BKR AMP	/P	DESCRIPTION	TYPE	LOAD (VA)	A PH (AMP)	B PH (AMP)	C PH (AMP)
	12.0	1440		RP	OFFICE 8 DUPLEX	20	/1	1	A	2	20	/1		FACP	MN	500	4.2		
	8.3	1000		RP	WORKROOM 2 DUPLEX	20	/1	3	B	4	20	/1		EXTERIOR 2 DUPLEX	RP	360		3.0	
8.3		1000		RP	WORKROOM 2 DUPLEX	20	/1	5	C	6	20	/1		SHOP 3 DUPLEX	RP	540			4.5
	4.5	540		RP	AREA TECH 3 DUPLEX	20	/1	7	A	8	20	/1		SHOP 3 DUPLEX	RP	540	4.5		
4.5		540		RP	AREA TECH 3 DUPLEX	20	/1	9	B	10	20	/1		ICE	RP	800		6.7	
9.0		1080		RP	OFFICE 6 DUPLEX	20	/1	11	C	12	20	/1		CHEST FREEZER	RP	800			6.7
	4.5	540		RP	CORRIDOR 2 DUPLEX	20	/1	13	A	14	30	/2		DRYER	MN	4000	19.2		
4.5		540		RP	CONFERENCE 3 DUPLEX	20	/1	15	B	16				14-30R	MN			19.2	
4.5		540		RP	CONFERENCE 3 DUPLEX	20	/1	17	C	18	20	/1		WASHER	MN	1200			10.0
	5.0	600		RP	FRIDGE	20	/1	19	A	20	20	/1		FRIDGE	RP	600	5.0		
	8.3	1000		RP	COFFEE MAKER	20	/1	21	B	22	20	/1		FREEZER	RP	800		6.7	
					SPARE	20	/1	23	C	24	20	/1		PREP. 3 DUPLEX	RP	540			4.5
	5.1	607		LT	LIGHTING, EF-1	20	/1	25	A	26	60	/3		EWH-1	MN	16000	44.4		
1.5		180		RP	DUPLEX	20	/1	27	B	28					MN			44.4	
4.2		500		RP	DUPLEX	20	/1	29	C	30					MN				44.4
					SPARE	20	/1	31	A	32	20	/2		EQUIPMENT	RP	1664	8.0		
	25.6		5325	H	HP-1	40	/2	33	B	34					RP			8.0	
25.6				H				35	C	36	20	/2		EQUIPMENT	RP	1664			8.0
	16.0	3328		H	HP-2	30	/2	37	A	38					RP		8.0		
16.0				H				39	B	40	20	/1		OVERHEAD DOOR	MM	400		3.3	
					SPACE			41	C	42	20	/1		OVERHEAD DOOR	MM	400			3.3

CONNECTED LOADS

C PH (AMP)	B PH (AMP)	A PH (AMP)	LOAD (VA)	TYPE	DESCRIPTION
108.9	124.9	99.3	38653	H	ELECTRIC HEAT
				C	A/C REFRIGERATION
13.3	10.0	6.7	3600	MM	MISC. MOTORS
		2.5	304	OL	OUTDOOR LIGHTING
4.1	3.5	5.1	1517	LT	INDOOR LIGHTING
89.8	71.8	94.6	29328	RP	RECEPTACLES
				EX	EXISTING DEMAND
				MC	MISC. CONTINUOUS
54.4	63.6	69.9	21950	MN	MISC. NON-CONTINUOUS
				KT	KITCHEN EQUIPMENT
270.5	273.8	278.0	95352		*** TOTAL ***
3.3	3.3	3.3	400		LARGEST MOTOR

NEC DEMAND LOADS

DEMAND FACTOR	TYPE	DESCRIPTION	LOAD (VA)	N (AMP)	A PH (AMP)	B PH (AMP)	C PH (AMP)
1.00	H	ELECTRIC HEAT	38653		99.3	124.9	108.9
0.00	C	A/C REFRIGERATION					
1.00	MM	MISC. MOTORS	3600		6.7	10.0	13.3
1.25	OL	OUTDOOR LIGHTING	380		3.2		
1.25	LT	INDOOR LIGHTING	1896		6.3	4.4	5.1
220.44	RP	RECEPTACLES	19664		60.5	45.9	57.4
1.25	EX	EXISTING DEMAND					
1.25	MC	MISC. CONTINUOUS					
1.00	MN	MISC. NON-CONTINUOUS	21950		69.9	63.6	54.4
0.65	KT	KITCHEN EQUIPMENT					
LC		FEED-THRU		INCLUDED IN TYPES			
0.25		LARGEST MOTOR	100		0.8	0.8	0.8
		*** TOTAL ***	86243	9	246.6	249.6	239.9

LC

NEW

LIGHTING PANELBOARD

FULL SIZE NEUTRAL, W/ COPPER GROUND BUS
3R NEMA ENCLOSURE
X FEED THRU LUGS
SURFACE MOUNTING

400 AMP MLO
208 VOLT P-P
120 VOLT P-N
3 PHASE
4 WIRE
22000 A/C SYMMETRICAL

400 AMP BUS RATING

C PH (AMP)	B PH (AMP)	A PH (AMP)	LOAD (VA)	TYPE	DESCRIPTION	CKT BKR AMP	/P		NO		NO	CKT BKR AMP	/P	DESCRIPTION	TYPE	LOAD (VA)	A PH (AMP)	B PH (AMP)	C PH (AMP)
	4.2	500		RP	CORD REEL	20	/1	1	A	2	20	/1		STORAGE 2 DUPLEX	RP	360	3.0		
	4.2	500		RP	CORD REEL	20	/1	3	B	4	20	/1		STORAGE 2 DUPLEX	RP	360		3.0	
4.2		500		RP	CORD REEL	20	/1	5	C	6	20	/1		STORAGE 2 DUPLEX	RP	360			3.0
	4.2	500		RP	CORD REEL	20	/1	7	A	8	20	/1		STORAGE 2 DUPLEX	RP	360	3.0		
	4.2	500		RP	CORD REEL	20	/1	9	B	10	20	/1		STORAGE 3 DUPLEX	RP	540		4.5	
4.2		500		RP	CORD REEL	20	/1	11	C	12	50	/2		RV PEDESTAL	RP	6000			28.8
	20.8	7500		H	EUH-3	30	/3	13	A	14					RP		28.8		
20.8				H				15	B	16	20	/1		LIGHTING	LT	420		3.5	
20.8				H				17	C	18	20	/1		LIGHTING	LT	490			4.1
	20.8	7500		H	EUH-4	30	/3	19	A	20	20	/1		EXTERIOR LIGHTING	OL	304	2.5		
20.8				H				21	B	22	20	/1		CANOPY DUPLEXES	RP	540		4.5	
20.8				H				23	C	24	20	/1		OVERHEAD DOORS	MM	400			3.3
	20.8	7500		H	EUH-1	30	/3	25	A	26	20	/1		OVERHEAD DOORS	MM	400	3.3		
20.8				H				27	B	28	20	/1		OVERHEAD DOORS	MM	400		3.3	
20.8				H				29	C	30	20	/1		OVERHEAD DOORS	MM	400			3.3
	20.8	7500		H	EUH-2	30	/3	31	A	32	20	/1		OVERHEAD DOORS	MM	400	3.3		
20.8				H				33	B	34	20	/1		OVERHEAD DOORS	MM	400		3.3	
20.8				H				35	C	36	20	/1		OVERHEAD DOORS	MM	400			3.3
					SPACE			37	A	38	20	/1		IRRIGATION CONTROLLER	MN	250	2.1		
					SPACE			39	B	40				SPACE					
					SPACE			41	C	42				SPACE					

CONNECTED LOADS

C PH (AMP)	B PH (AMP)	A PH (AMP)	LOAD (VA)	TYPE	DESCRIPTION
83.3	83.3	83.3	30000	H	ELECTRIC HEAT
				C	A/C REFRIGERATION
10.0	6.7	6.7	2800	MM	MISC. MOTORS
		2.5	304	OL	OUTDOOR LIGHTING
4.1	3.5		910	LT	INDOOR LIGHTING
40.2	20.3	43.2	11520	RP	RECEPTACLES
				EX	EXISTING DEMAND
				MC	MISC. CONTINUOUS
	2.1	250	MN	MN	MISC. NON-CONTINUOUS
				KT	KITCHEN EQUIPMENT
137.5	113.7	137.7	45784		*** TOTAL ***
3.3	3.3	3.3	400		LARGEST MOTOR

NEC DEMAND LOADS

DEMAND FACTOR	TYPE	DESCRIPTION	LOAD (VA)	N (AMP)	A PH (AMP)	B PH (AMP)	C PH (AMP)
1.00	H	ELECTRIC HEAT	30000		83.3	83.3	83.3
0.00	C	A/C REFRIGERATION					
1.00	MM	MISC. MOTORS	2800		6.7	6.7	10.0
1.25	OL	OUTDOOR LIGHTING	380		3.2		
1.25	LT	INDOOR LIGHTING	1138			4.4	5.1
220.44	RP	RECEPTACLES	10760		37.3	17.6	34.7
1.25	EX	EXISTING DEMAND					
1.25	MC	MISC. CONTINUOUS					
1.00	MN	MISC. NON-CONTINUOUS	250		2.1		
0.65	KT	KITCHEN EQUIPMENT					
		FEED-THRU		INCLUDED IN TYPES			
0.25		LARGEST MOTOR	100		0.8	0.8	0.8
		*** TOTAL ***	45428	21	133.3	112.7	133.9

LOAD ANALYSIS

8,421 AREA IN SQUARE FEET
208 VOLT P-P
120 VOLT P-N
3 PHASE
4 WIRE

DESCRIPTION	LOAD CON. (KVA)	NEC (KVA)	PHASE A (AMPS)	PHASE B (AMPS)	PHASE C (AMPS)	NEUTRAL (AMPS)	REMARKS ON NEC CALCULATION
ELECTRIC HEAT	47.3	47.3	131.3	131.3	131.3	131.3	100% of CONNECTED
A/C REFRIGERATION							LESS THAN HEAT
MISCELLANEOUS MOTORS	11.0	11.0	30.5	30.5	30.5		100% of CONNECTED
OUTDOOR LIGHTING	1.0	1.3	3.6	3.6	3.6	3.6	125% of CONNECTED
INDOOR LIGHTING	2.1	13.7	38.0	38.0	38.0	38.0	125% of the LARGER of CONNECTED or NEC TABLE 220.12
RECEPTACLES	39.7	24.8	69.0	69.0	69.0	69.0	NEC TABLE 220.44
EXISTING DEMAND							NOT APPLICABLE
MISCELLANEOUS CONTINUOUS							125% of CONNECTED
MISCELLANEOUS NON-CONTINUOUS	37.0	37.0	102.6	102.6	102.6	102.6	100% of CONNECTED
KITCHEN EQUIPMENT							NO COMMERCIAL KITCHEN
25% LARGEST MOTOR	1.5	1.5	4.3	4.3	4.3		25% of LARGEST MOTOR ADDED
*** TOTALS ***	139.6	136.6	379.1	379.1	379.1	344.4	
*** CAPACITY ***			400.0	400.0	400.0	400.0	
*** SPARE CAPACITY ***			20.9	20.9	20.9	55.6	

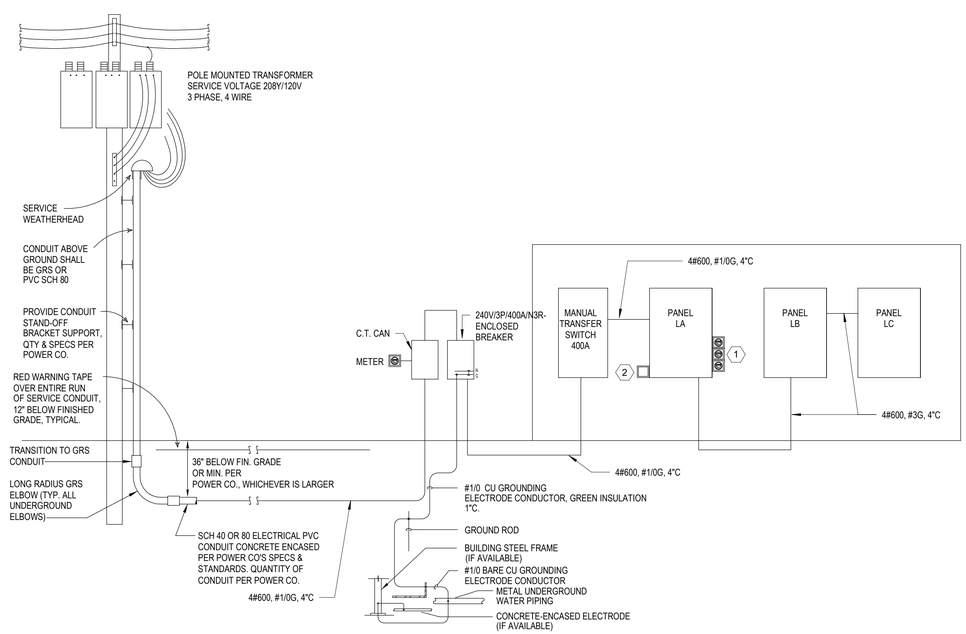

1 **ELECTRICAL RISER DIAGRAM**
NOT TO SCALE

PRESTIGE ENGINEERING SERVICES
TBPE Registration Number 18865
909 NE Loop 410, Suite 818
San Antonio, Texas 78209
210.686.0444
www.InfinityMEP.com

TEXAS PARKS & WILDLIFE

STATE OF TEXAS
ANDREW D. HUNTER
109975
LICENSED
PROFESSIONAL ENGINEER
04/23/2021

PDG ARCHITECTS
10000 RICHMOND
SUITE 100
HOUSTON, TX 77042
713-629-6100

MATHIS FISHERIES OFFICE
AT LAKE CORPUS CHRISTI, MATHIS, TEXAS
PROJECT NUMBER: 127144

DATE: 04-23-2021
DESIGNED BY: TA
DRAWN BY:
REVIEWED BY:
REVISED:
REVISED:

SHEET TITLE
PANEL SCHEDULES & RISER

SHEET NUMBER
E7.00

PERCENTAGE: BID SET

PLUMBING GENERAL NOTES

1. ALL SYSTEMS WILL BE INSTALLED IN ACCORDANCE WITH ALL APPLICABLE STATE CODES AND NATIONAL STANDARDS.
2. NO PVC PIPING SHALL BE INSTALLED IN A RETURN AIR PLENUM.
3. CONTRACTOR SHALL PROVIDE A FULLY FUNCTIONAL, CODE COMPLIANT SYSTEM.
4. CONTRACTOR SHALL TEST ALL SYSTEMS FOR FUNCTIONALITY BOTH BEFORE WORK IS STARTED AND ALSO AFTER CONTRACTED WORK IS FINISHED. REPORT ANY ISSUES TO THE ENGINEER AND TO THE BUILDING MANAGER.
5. CONTRACTOR SHALL FIELD VERIFY ALL EXISTING CONDITIONS TO FAMILIARIZE THEMSELVES WITH THE PROJECT BEFORE BIDDING. ALL ISSUES SHALL BE TAKEN INTO ACCOUNT WITH THEIR BID. CONTRACTOR AGREES TO ACCEPT ALL EXISTING CONDITIONS AS PART OF THEIR BID.
6. INFORMATION ON THE DRAWINGS IS DIAGRAMMATIC IN NATURE. NOT ALL OFFSETS ARE SHOWN FOR CLARITY PURPOSES. CONTRACTOR TO PROVIDE ALL OFFSETS AND FITTINGS TO MAKE A FULLY FUNCTIONAL SYSTEM.
7. CONTRACTOR SHALL PROTECT ALL EXISTING BUILDING STRUCTURES, FLOORING, PIPING, FIXTURES, ETC. CONTRACTOR IS RESPONSIBLE FOR ANY DAMAGE THEY CAUSE TO THE SITE, PLUMBING FIXTURES OR PIPING, ETC.
8. COORDINATE ALL WORK WITH BUILDING OWNER'S OPERATING SCHEDULE.
9. ALL SYSTEMS SHALL REMAIN OPERATIONAL DURING CONSTRUCTION AS REQUIRED BY BUILDING OWNER.
10. UNUSED FLOOR DRAINS OR FLOOR SINKS ON THE GROUND FLOOR SHALL BE PERMANENTLY PLUGGED AND MODIFIED TO ALLOW INSTALLATION OF NEW FLOORING MATERIAL
11. PROVIDE ANY AND ALL DEMOLITION WORK REQUIRED TO INSTALL NEW EQUIPMENT. RETURN SURROUNDING AREA TO ORIGINAL CONDITION AFTER INSTALLATION IS COMPLETE. MAINTAIN PLUMBING SYSTEMS IN ADJACENT SPACES.
12. CONTRACTOR TO COORDINATE ALL PLUMBING FIXTURE COMPATIBILITY WHEN MATCHING FIXTURES, FLUSH VALVES, FAUCETS, DRAINS, ETC.
13. CONTRACTOR TO VERIFY ARCHITECTURAL REQUIREMENTS AND COORDINATION WITH SPECIFIED PLUMBING FIXTURES. ANY DISCREPANCIES SHALL BE BROUGHT TO THE ARCHITECT'S AND ENGINEER'S ATTENTION.
14. CONTRACTOR SHALL PROVIDE ALL MATERIAL, EQUIPMENT, ACCESSORIES, AND LABOR REQUIRED FOR INSTALLATION OF A COMPLETE AND OPERABLE SYSTEMS.
15. CONTRACTOR SHALL COORDINATE ALL PIPE ROUTING AND EQUIPMENT LOCATIONS WITH OTHER TRADES AND EXISTING CONDITIONS. CONTRACTOR SHALL MODIFY EXISTING DESIGN CONDITIONS AS REQUIRED TO PROVIDE A FUNCTIONAL, CODE COMPLIANT INSTALLATION.
16. INSTALL ALL EQUIPMENT PER MANUFACTURER'S INSTRUCTIONS AND RECOMMENDATIONS. MAINTAIN ALL REQUIRED CLEARANCES FOR MAINTENANCE AND ACCESS.
17. ALL PLUMBING FIXTURES SHALL MEET TAS/ADA REQUIREMENTS. FIXTURES SHALL BE INSTALLED TO MEET TAS/ADA HEIGHT AND CLEARANCE REQUIREMENTS. COORDINATE WITH ARCHITECTURAL DRAWING DIMENSIONS.
18. ALL EQUIPMENT SHALL BE INSTALLED ON 6" CONCRETE HOUSEKEEPING PADS.
19. PROVIDE DIELECTRIC FITTINGS OR UNIONS BETWEEN PIPING OF DISSIMILAR METALS.
20. PROVIDE ACCESS PANELS AS REQUIRED TO SERVICE ALL VALVES AND EQUIPMENT. COORDINATE LOCATION OF ACCESS PANELS WITH ARCHITECTURAL CEILING AND WALL ELEVATION DRAWINGS.
21. DO NOT ROUTE PIPING THROUGH ELECTRICAL ROOMS/CLOSETS OR IT/DATA ROOMS. IF THE CONSTRUCTION SITUATION MAKES THIS UNAVOIDABLE, PROVIDE SECONDARY LEAK PROTECTION SLOPED DRAIN PAN UNDER PIPE. ROUTE DRAIN PAN LINE TO NEAREST FLOOR DRAIN OR SINK TAIL PIECE.
22. PROVIDE SHUT-OFF VALVES ON ALL PLUMBING BRANCH PIPING, EQUIPMENT, TOILET ROOM GROUPS, AND INDIVIDUAL FLOORS.
23. FOR SLOPED PIPING SLOPE PIPING AT 1/4" PER FOOT FOR PIPE SIZES 3" & LESS. SLOPE PIPING 4" AND LARGER AT 1/8" PER FOOT.
24. COORDINATE ALL ROOF PENETRATIONS WITH STRUCTURE. COORDINATE ALL VENT TERMINATIONS WITH BUILDING AIR INTAKES TO MAINTAIN CODE REQUIRED MINIMUM DISTANCES.
25. PROVIDE BACKFLOW PREVENTERS AS REQUIRED BY CODE AND APPLICABLE STANDARDS.
26. ROUTE ALL PIPING AS HIGH AS POSSIBLE AND TIGHT TO STRUCTURE. INSTALL PERPENDICULAR TO WALLS AND COLUMNS.
27. PROVIDE TRAP GUARD ON ALL FLOOR DRAINS, AIR DRAINS AND FLOOR SINKS OR OTHER APPROVED TRAP SEALING DEVICE.
28. ALL WORK SHALL BE COMPLETED TO THE APPROVAL OF THE BUILDING ENGINEER.
29. INSULATE ALL HORIZONTAL RAIN WATER LEADERS FROM THE ROOF DRAIN UNTIL ITS TIE-IN WITH THE VERTICAL RISER. INSULATE ALL CONDENSATE DRAIN PIPING FROM UNIT TO DRAIN LINE OUTLET OR CONNECTION TO TAIL PIECE OF SINK.
30. CONTRACTOR TO ACCOMMODATE ALL CLEARANCE AND DIMENSIONAL DIFFERENCES OF EQUIPMENT ACTUALLY PURCHASED FOR INSTALLATION.

PLUMBING LEGEND

—A—	COMPRESSED AIR PIPING
—C—	CONDENSATE DRAIN PIPING
	DOMESTIC COLD WATER PIPING
	DOMESTIC HOT WATER PIPING
	DOMESTIC HOT WATER RETURN PIPING
—G—	NATURAL GAS PIPING
—OST—	OVERFLOW STORM PIPING
—SAN—	SANITARY (ABOVE FLOOR)
	SANITARY (BELOW FLOOR)
—SP—	SPRINKLER PIPING
	STORM DRAIN PIPING
	VENT PIPING
	PIPING TO BE DEMOLISHED
	CLEANOUT/PLUG
	PIPE DOWN
	PIPE UP
	PIPE CAP
	CHANGE IN PIPE ELEVATION
	INSULATED AND HEAT TRACED PIPING
	ACCESS PANEL FOR TRAP PRIMER
DCVA	DOUBLE CHECK VALVE ASSEMBLY
RPBP	REDUCED PRESSURE BACKFLOW PREVENTER ASSEMBLY
	BOTTOM PIPE CONNECTION
	CLEANOUT (TWO-WAY) (PROVIDE CONCRETE PAD OUTSIDE 18" X 24" X 4")
	FLOOR CLEANOUT/GRADE CLEANOUT
	P-TRAP
	TOP PIPE CONNECTION
	VALVE IN VERTICAL
	WALL HYDRANT
	ANGLE RELIEF VALVE
	AUTOMATIC AIR VENT
	AUTOMATIC CONTROL VALVE
	AUTOMATIC CONTROL VALVE (3-WAY)
	BUTTERFLY VALVE MANUAL
	BALL VALVE
	CALIBRATED BALANCING VALVE
	CHECK VALVE
	CHECK VALVE WITH A.B.D.
	FLEXIBLE CONNECTION
	GAS COCK VALVE
	GLOBE VALVE
	OS&Y (OUTSIDE SCREW & YOKE) VALVE
	PRESSURE REDUCING VALVE
	PRESSURE GAUGE AND COCK
	RELIEF SAFETY VALVE
	SOLENOID VALVE
	THERMOMETER
	TEMPERATURE MIXING VALVE
	WATER HAMMER ARRESTOR
	VACUUM BREAKER
	VALVE WITH TAMPER SWITCH
	Y-STRAINER WITH BLOW OFF VALVE
	HOSE BIBB
M	METER
	PUMP
	FLOW METER
	VENTURI METER
	POINT OF CONNECTION (NEW TO EXISTING)
EWH - 1-1	EQUIPMENT DESIGNATION

PLUMBING ABBREVIATIONS

(E)	EXISTING
(N)	NEW
AFF	ABOVE FINISHED FLOOR
AP	ACCESS PANEL
BFF	BELOW FINISHED FLOOR
C	CONDENSATE DRAIN
CO	CLEANOUT
CW	DOMESTIC COLD WATER
DF	DRINKING FOUNTAIN
DN	DOWN
DR	DRAIN
ELEV	ELEVATION
ET	EXPANSION TANK
EW	EYE WASH
EWH	ELECTRIC WATER HEATER
FCO	FLOOR CLEANOUT
FD	FLOOR DRAIN
FDC	FIRE DEPARTMENT CONNECTION
FP	FIRE PUMP
FS	FLOOR SINK
HB	HOSE BIBB
HW	HOT WATER
HWR	HOT WATER RETURN
IE	INVERT ELEVATION
IW	INDIRECT WASTE
JP	JOCKEY PUMP
L	LAVATORY
MSB	MOP SINK BASIN
NC	NORMALLY CLOSED
NIC	NOT IN CONTRACT
NO	NORMALLY OPEN
OFD	OVERFLOW DRAIN
OS&Y	OUTSIDE SCREW & YOKE GATE VALVE
POC	POINT OF CONNECTION
PRV	PRESSURE REDUCING VALVE
RD	ROOF DRAIN
S	SINK
SAN	SANITARY WASTE
SH	SHOWER
SOI	SAND-OIL INTERCEPTOR
SP	SUMP PUMP
ST	STORM PIPING
TD	TRENCH DRAIN
TMV	TEMPERATURE MIXING VALVE
TP	TRAP PRIMER
UR	URINAL
V	VENT
VTR	VENT THROUGH ROOF
WC	WATER CLOSET
WCO	WALL CLEANOUT
WH	WALL HYDRANT
WHA	WATER HAMMER ARRESTOR

PLUMBING SHEET LIST

SHEET NUMBER	SHEET NAME
P0.01	PLUMBING COVER SHEET
P0.02	PLUMBING SCHEDULES
P1.01	PLUMBING UNDERFLOOR PLAN
P2.01	PLUMBING FLOOR PLAN
P6.01	PLUMBING DETAILS
P6.02	PLUMBING DETAILS

CODE SUMMARY

A. **APPLICABLE CODES INCLUDE BUT ARE NOT LIMITED TO:**
1. BUILDING CODE: 2015 IBC
2. GAS CODE: 2018 NFPA 54
3. PLUMBING CODE: 2015 IPC
4. LIFE SAFETY CODE: 2015 NFPA

SHOCK ARRESTOR SCHEDULE

	MANUFACTURER & MODEL	FIXTURE UNITS	SIZE	MODEL NUMBER
A	WADE SHOKSTOPS	1-11	1/2" NPT	SC-500
B	WADE SHOKSTOPS	12-32	3/4" NPT	SC-750
C	WADE SHOKSTOPS	33-60	1" NPT	SC-1000
D	WADE SHOKSTOPS	61-113	1 1/4" NPT	SC-1250
E	WADE SHOKSTOPS	114-154	1 1/2" NPT	SC-1500
F	WADE SHOKSTOPS	155-330	2" NPT	SC-2000

NOTE:
PROVIDE SHOCK ARRESTORS AT ENDS OF DCW AND DHW PIPING RUNS; AT ALL QUICK-CLOSING FIXTURES SUCH AS SHOWERS, FLUSHVALVES, SOLENOID VALVES, SINGLE-HANDED FAUCETS, AND SENSOR OPERATED FAUCETS; AND, FOR ALL GROUPS OF FIXTURES. SHOCK ARRESTORS SHALL BE PLACED AS CLOSE AS POSSIBLE TO THE LAST FIXTURE ON EACH PIPING RUN. ALL WATER HAMMER ARRESTORS SHALL HAVE STAINLESS STEEL WELDED NESTED BELLOWS. PISTON AND CHAMBER TYPE ARE PROHIBITED.

TEXAS PARKS & WILDLIFE

STATE OF TEXAS
JACOB FRITSCH
136264
LICENSED
PROFESSIONAL ENGINEER
04/23/2021

PDG ARCHITECTS
10000 RICHMOND
SUITE 100
HOUSTON, TX 77042
713-629-6100

MATHIS FISHERIES OFFICE
AT LAKE CORPUS CHRISTI, MATHIS, TEXAS
PROJECT NUMBER: 127144

DATE: 04-23-2021
DESIGNED BY: JLF
DRAWN BY: AC
REVIEWED BY: JLF
REVISED:
REVISED:

SHEET TITLE
PLUMBING COVER SHEET

SHEET NUMBER
P0.01

PERCENTAGE: BID SET

PRESTIGE ENGINEERING SERVICES
TBPE Registration Number 18865
909 NE Loop 410, Suite 818
San Antonio, Texas 78209
210.686.0444
www.InfinityMEP.com

PUMP SCHEDULE

TYPE	NUMBER	SERVICE	LOCATION	UNIT MANUFACTURER	UNIT MODEL	UNIT TYPE	GPM	HEAD (FT.)	RPM	BHP	HP	MINIMUM EFFICIENCY (PERCENT)	CASING PRESSURE	IMPELLER SIZE	ELECTRICAL DATA VOLTAGE	PHASE	HERTZ	OPERATIONAL WEIGHT (LBS.)	VARIABLE SPEED	NOTES
CP	1	HOT WATER	MECHANICAL 34	TACO	008-BC6	INLINE CIRC.	1	10	3250	-	1/25	N/A	N/A	N/A	120	1	60	N/A	N/A	1

NOTES:

1. TIME CLOCK - TORK MODEL EWZ120. TIME CLOCK SHALL BE PROVIDED BY PLUMBING CONTRACTOR AND INSTALLED BY ELECTRICAL CONTRACTOR.

ELECTRIC WATER HEATER SCHEDULE

EQUIPMENT TYPE	NUMBER	SERVICE	LOCATION	UNIT TYPE MANUFACTURER	UNIT TYPE MODEL	STORAGE GALLONS	RECOVERY GPH@100°F	TEMPERATURE SETTING (°F)	ELECTRICAL DATA KW	VOLTAGE	PHASE	HZ	OPERATIONAL WEIGHT (LBS.)
EWH	1	DOMESTIC HOT WATER	MECHANICAL 34	A.O. SMITH	DRE-52-15	50	82	140	16	208	3	60	500
EWH	2	DOMESTIC HOT WATER	WEST BUILDING	EEMAX	AM010208T	NA	1.5	110	10	208	1	60	NA

NOTES:

1. PROVIDE WITH THERM-X-TROL ST-5C EXPANSION TANK FOR EWH-1.

PLUMBING FIXTURE CONNECTION SCHEDULE

FIXTURE	CW	HW	MIN.TRAP SIZE & TRAP ARM	V	NOTES
WATER CLOSET (FLUSH VALVE)	1"	-	4"	2"	1,2
LAV	3/4"	3/4"	1-1/2"	2"	2
KITCHEN SINK	3/4"	3/4"	1-1/2"	2"	2
MOP SERVICE BASIN	3/4"	3/4"	3"	2"	2
URINAL (FLUSH VALVE)	3/4"	-	2"	2"	1,2
SHOWER	3/4"	3/4"	2"	2"	2

NOTES:

1. 2" MINIMUM WASTE AND 2" VENT PIPE BELOW GRADE.
2. TRAP SIZE TO BE CONSISTENT WITH FIXTURE OUTLET.

PLUMBING FIXTURE SCHEDULE

SYMBOL	MANUFACTURER & MODEL NUMBER	DESCRIPTION	NOTES
WC-1 (ADA) TANK	AMERICAN STANDARD MODEL 215AA.104	VITREOUS CHINA FLUSH TANK WATER CLOSET 1.28 GPF WITH OPEN FRONT LESS COVER SEAT. SUPPLY WITH STOP: MCGUIRE # 2169LK LOOSE KEY SUPPLY AND STOP KIT.	
L-1 (ADA)	AMERICAN STANDARD MODEL 0355.012	VITREOUS CHINA WALL MOUNTED LAVATORY, 3 DECK HOLE, AND RECTANGULAR BASIN. FAUCETS: KOHLER # K77967-BL : MANUAL FAUCET, 0.5 GPM AERATOR AND 4" VANDAL PROOF WRIST BLADE HANDLES. SUPPLY WITH STOP: MCGUIRE # BV2165CC LOOSE KEY SUPPLY AND STOP KIT. SUPPLY WITH STOP: MCGUIRE # BV2165CC LOOSE KEY SUPPLY AND STOP KIT. TRAP: MCGUIRE # 8090 CAST P-TRAP WITH CLEANOUT. INSULATION: TRUEBRO # LAV GUARD ON TRAP, DRAIN, AND BOTH HOT AND COLD SUPPLY. REFER TO ARCHITECTURAL FOR MOUNTING HEIGHT & LOCATION.	PROVIDE TMV-1.
SK-1	ELKAY LRADQ202265PD	SINGLE-BOWL SINK, TYPE 304 STAINLESS STEEL. SELF-RIMMING AND UNDERCOATED, WITH 1-1/2 INCH DRAIN, LEDGE BACK DRILLED FOR TRIM. FAUCET: CHICAGO FAUCETS MODEL 434-ABCP, HIGH ARC FAUCET WITH PULL DOWN SPRAY, WITH 1.5 GPM AERATOR. SUPPLY WITH STOP: MCGUIRE # BV2165CC LOOSE KEY SUPPLY AND STOP KIT. SUPPLY WITH STOP: MCGUIRE # BV2165CC LOOSE KEY SUPPLY AND STOP KIT. TRAP: MCGUIRE # 8090 CAST P-TRAP WITH CLEANOUT. INSULATION: TRUEBRO # LAV GUARD ON TRAP, DRAIN, AND BOTH HOT AND COLD SUPPLY.	PROVIDE TMV-1.
SK-2	ELKAY 14-2C16X20-2-18X	TWO COMPARTMENT FREE STANDING SCULLERY SINK, TYPE 304 STAINLESS STEEL. SELF-RIMMING AND UNDERCOATED, WITH 1-1/2 INCH DRAIN, LEDGE BACK DRILLED FOR TRIM. FAUCET: CHICAGO FAUCETS MODEL445-L9E1ABCP, SINK FAUCET WITH WRIST BLADS,WITH 1.5 GPM AERATOR. SUPPLY WITH STOP: MCGUIRE # BV2165CC LOOSE KEY SUPPLY AND STOP KIT. SUPPLY WITH STOP: MCGUIRE # BV2165CC LOOSE KEY SUPPLY AND STOP KIT. TRAP: MCGUIRE # 8090 CAST P-TRAP WITH CLEANOUT. INSULATION: TRUEBRO # LAV GUARD ON TRAP, DRAIN, AND BOTH HOT AND COLD SUPPLY.	PROVIDE TMV-1.
FD-1	JAY R. SMITH MODEL 2010	6" DIAMETER NICKEL BRONZE STRAINER, ROUND FLOOR DRAIN-CAST IRON BODY WITH FLANGE, ADJUSTABLE NICKEL BRONZE STRAINER. TRAP GUARD AND NO-HUB OUTLET.	
FD-2	JAY R. SMITH MODEL 3021	ROUND NICKEL BRONZE TOP 8 1/2" (215) TOP, ACID RESISTANT COATED FLOOR, TRAP GUARD WITH SEDIMENT BUCKET.	
FS-1	JAY R. SMITH 3101-13	SQUARE NICKEL BRONZE TOP, 8 1/2" (215) TOP - MEDIUM RECEPTORS, SANI-RECEPTOR ACID RESISTANT COATED, 3/4" - GRATE, TRAP GUARD WITH SEDIMENT BUCKET.	
MS-1	FIAT TERRAZO TSB3000 SQUARE	MOP SINK 24 X 24 X 10 INCH HIGH. RECEPTOR COMPOSED OF PEARL GREY MARBLE CHIPS AND WHITE PORTLAND CEMENT GROUND SMOOTH, GROUTED AND SEALED TO RESIST STAINS, FLOOR MOUNTED, WITH 1-1/4 INCH WIDE SHOULDERS, VINYL BUMPER GUARD, STAINLESS STEEL DOME STRAINER. FAUCET: FIAT 830-AA CHROME PLATED WITH VACUUM BREAKER, INTEGRAL STOPS. ADJUSTABLE WALL BRACE, PAIL HOOK, AND 3/4" HOSE THREAD ON SPOUT. BODY INLETS 8" CENTER TO CENTER. PROVIDE 3" QUICK DRAIN CONNECTOR, MODEL 832-AA 30" LONG HOSE AND BRACKET MODEL 889-CC MOP HANGER, MODEL 1453-BB STAINLESS STEEL STRAINER DRAIN AND WALL GUARD. (MOUNT FAUCET AT 36" A.F.F.).	
FCO-1	JAY R. SMITH MODEL 4120A	FLOOR CLEANOUT-DUCTILE IRON BODY WITH THREADED ADJUSTABLE HOUSING, FLANGED FERRULE WITH BRONZE, GASKETED PLUG HAVING NEOPRENE GASKET. ROUND SCORIATED NICKEL BRONZE VENEER TRACTOR COVER, NO-HUB OUTLET.	
WCO-1	JAY R. SMITH MODEL 4710-05	WALL CLEANOUT-CAST IRON BODY WITH SPIGOT INLET/OUTLET AND THREADED BRASS RAISED HEAD, DRILLED AND TAPPED FOR r-20 SCREW. PROVIDE WITH 8480R, ROUND, STAINLESS STEEL ACCESS COVER HAVING 1/4-20X3-1/2 CENTER SCREW.	
GCO-1	JAY R. SMITH MODEL 4220	DOUBLE DUCO CAST IRON GRADE CLEANOUT WITH ROUND ADJUSTANBLE SCORIATED CAST IRON TOP.	
BFP-1	WATTS LF909	REDUCED PRESSURE BACKFLOW PREVENTER-BRONZE ASSEMBLY, FULL PORT, QUARTER TURN BRONZE BALL VALVES, WITH TEE HANDLES, TWO INDEPENDENT CHECK VALVES, CAPTURE STRINGS, REPLACEMENT CHECK SEATS AND DIFF. PRESSURE RELIEF, WITH BRONZE STRAINER. 3/4"-2".	
BFP-2	WATTS 750	BRONZE HEAVY DUTY FLOAT VALVE WITH MNPT THREADED OUTLET.	
HB-1	JAY R. SMITH #5673	ANTI-SIPHONE, VACUUM BREAKER PROTECTED WALL FAUCETS. EXPOSED HOSE CONNECTION.	
WH-1	JAY R. SMITH #5509QT	QUARTER TURN NON-FREEZE WALL HYDRANT WITH INTEGRAL VACUUM BREAKER AND STAINLESS STEEL BOX.	
TMV-1	ACORN ST70-38	TEMPERING VALVE SIMILAR LEAD-FREE CERTIFIED DZR BRASS BODY, ASSE 1070 AT 0.25 GPM AND MAXIMUM SET POINT 115 DEGREE FAHRENHEIT, FACTOR SET AT 105 DEGREE FAHRENHEIT.	
SH-1 (ADA)	ACORN SV16	1.25 GPM, LEAD-FREE THERMOSTATIC, TEMPERATURE/PRESSURE BALANCING MIXING VALVE FOR INDIVIDUAL SHOWERS. SHOWER FLOOR DRAIN: JAY R. SMITH 2005.	
WB-1	GUY GRAY 82327	CENTER DRAIN, STAINLESS STEEL WASHING MACHINE OUTLET BOX, QUARTER-TURN ARRESTER VALVES WITH 1/2" MIP/SWEAT CONNECTION FURNISHED, 2" SLIPNUT DRAIN, VALVES COMPLY WITH ASME A112.18.1.	
WB-2	GUY GRAY 88525	STAINLESS STEEL ICE MAKER BOX, QUARTER-TURN ARRESTER VALVES WITH 1/2" MIP/SWEAT CONNECTION FURNISHED, VALVES COMPLY WITH ASME A112.18.1.	

PRESTIGE ENGINEERING SERVICES
TBPE Registration Number 18865
909 NE Loop 410, Suite 818
San Antonio, Texas 78209
210.686.0444
www.InfinityMEP.com

TEXAS PARKS & WILDLIFE

STATE OF TEXAS
JACOB FRITSCH
136264
LICENSED PROFESSIONAL ENGINEER
04/23/2021

PDG ARCHITECTS
10000 RICHMOND
SUITE 100
HOUSTON, TX 77042
713-629-6100

MATHIS FISHERIES OFFICE
AT LAKE CORPUS CHRISTI, MATHIS, TEXAS
PROJECT NUMBER: 127144

DATE:	04-23-2021
DESIGNED BY:	JLF
DRAWN BY:	AC
REVIEWED BY:	JLF
REVISED:	
REVISED:	

SHEET TITLE
PLUMBING SCHEDULES

SHEET NUMBER
P0.02

PERCENTAGE: BID SET

KEYNOTES

KEYNOTE	DESCRIPTION
1	2" SAN FROM ABOVE.
2	UP TO FCO
3	3" SAN FROM ABOVE
4	2" VENT UP.
5	UP TO TWO WAY CLEAN OUT.
6	4" SAN FROM ABOVE.
7	2" CW UP TO FLOOR ABOVE SEE P2.01.
8	4" SANITARY STUB OUT 20 DFU'S @ 30 GPM. BOP= 2'-9" BELOW FINISHED GRADE.SEE CIVIL FOR CONT.
9	4" SANITARY STUB OUT 20 DFU'S @ 30 GPM. BOP= 2'-9" BELOW FINISHED GRADE.SEE CIVIL FOR CONT.
10	UP TO WCO.

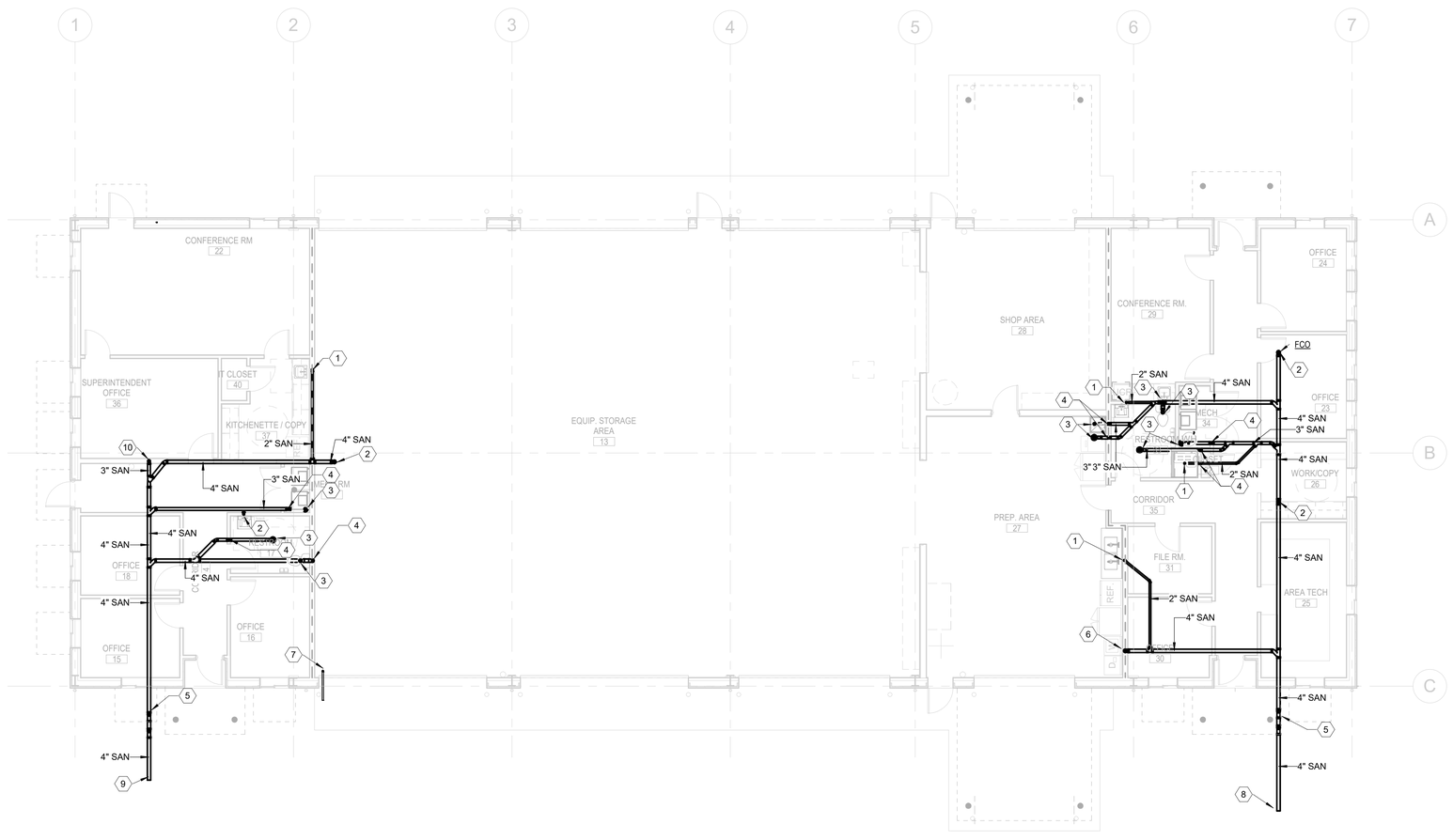

1 PLUMBING UNDERFLOOR PLAN

1/8" = 1'-0"

TEXAS PARKS & WILDLIFE

STATE OF TEXAS
JACOB FRITSCH
136264
LICENSED
PROFESSIONAL ENGINEER
04/23/2021

PDG ARCHITECTS

10000 RICHMOND
SUITE 100
HOUSTON, TX 77042
713-629-6100

MATHIS FISHERIES OFFICE

AT LAKE CORPUS CHRISTI, MATHIS, TEXAS

PROJECT NUMBER: 127144

DATE:	04-23-2021
DESIGNED BY:	JLF
DRAWN BY:	AC
REVIEWED BY:	JLF
REVISED:	
REVISED:	

SHEET TITLE

PLUMBING UNDERFLOOR PLAN

SHEET NUMBER

P1.01

PERCENTAGE: BID SET

PRESTIGE ENGINEERING SERVICES
TBPE Registration Number 18865
909 NE Loop 410, Suite 818
San Antonio, Texas 78209
210.686.0444
www.InfinityMEP.com

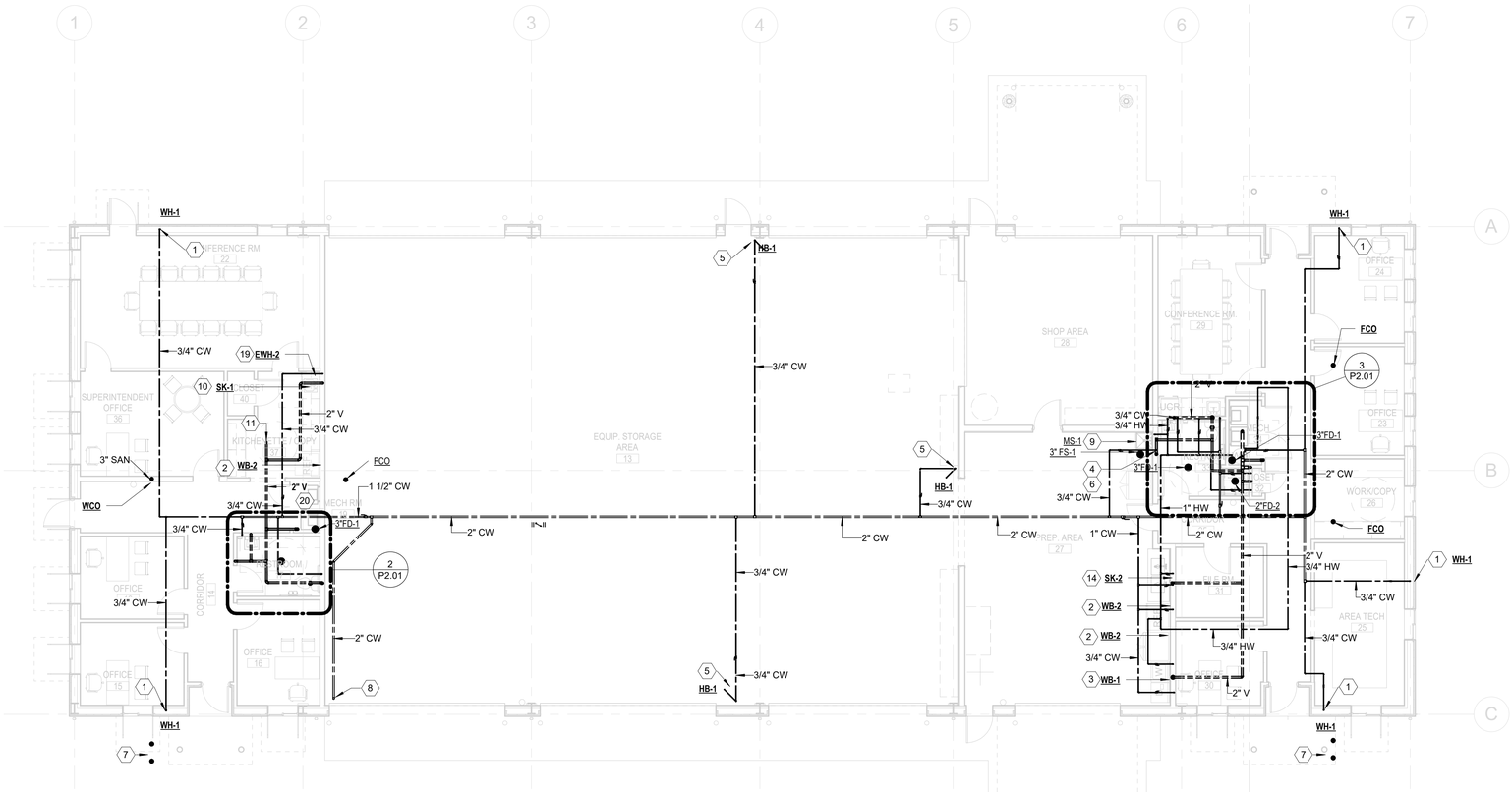

1 PLUMBING PLAN
1/8" = 1'-0"

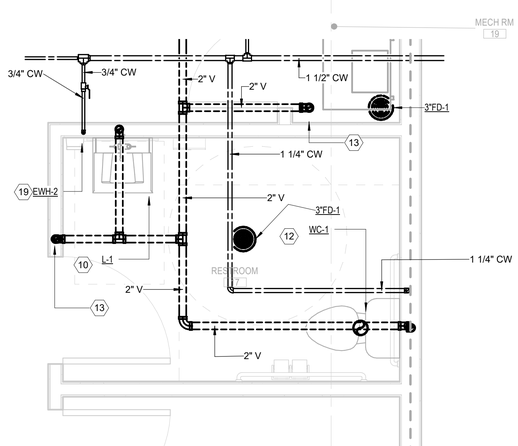

2 PLUMBING PLAN - ENLARGED RESTROOM 17
1/2" = 1'-0"

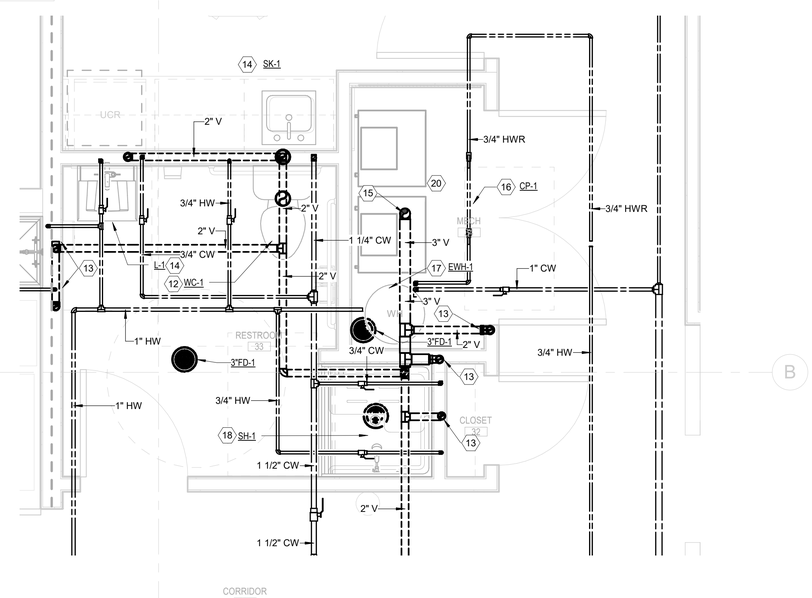

3 PLUMBING PLAN - ENLARGED RESTROOM 33
1/2" = 1'-0"

KEYNOTES

KEYNOTE	DESCRIPTION
1	3/4" CW DOWN IN WALL TO WALL HYDRANT@ 24" AFF. SEE ARCH DWGS FOR EXACT LOCATION OF WALL HYDRANT.
2	ROUTE 3/4" CW TO WALL BOX AND CONNECT. CONTRACTOR TO PROVIDE FINAL CONNECTION FROM WALL BOX TO FRIDGE.
3	ROUTE 3/4" CW & HW TO WALL BOX AND CONNECT. CONNECT FULL SIZE TRAP ARM TO WALL BOX AND CONNECT TO 2" SANITARY LINE WITHIN WALL. 2" SAN DOWN AND 2" VENT UP.
4	ROUTE 3/4" CW LINE DOWN IN WALL AND CONNECT TO A 1/2" RPZ MOUNTED AT 5'-0" AFF. ROUGH IN AND CONNECT 3/4" DCW LINE TO ICE MAKER.
5	3/4" CW DOWN ROUTED EXPOSED ON WALL TO HOSE BIBB AT 2'-0" ABOVE FLOOR.
6	ROUTE FULL SIZE DRAIN LINE TO FLOOR DRAIN AND INDIRECT WASTE.
7	2 WAY C.O.G. CONTRACTOR TO COORDINATE EXACT LOCATION WITH OWNER/ ARCHITECT PRIOR TO CONSTRUCTION.
8	2" CW LINE FROM BELOW. PROVIDE ISOLATION VALVE IN VERTICAL @ 7'-0" AFF. PROVIDE SYSTEM DRAIN VALVE AT 12 INCHES A.F.F. AND ROUTE DRAIN LINE OUT OF BUILDING AND SPILL OUT ONTO SPLASH BLOCK.
9	ROUTE 3/4" CW & HW LINE DOWN IN WALL TO MOP SINK. 3" SAN DOWN & 2" VENT UP.
10	ROUTE 3/4" CW LINE DOWN TO SINK AND UNDERCOUNTER ELECTRIC WATER HEATER. ROUTE 3/4" HW LINE FROM WATER HEATER TO SINK HOT WATER CONNECTION. CONNECT 1 1/2" P-TRAP TO SINK DRAIN. 2" SAN DOWN AND 2" VENT UP. SEE P6.01 FOR INSTANTANOUS WATER HEATER DETAIL.
11	2" VENT UP THROUGH ROOF.
12	ROUTE 1 1/4" CW LINE DOWN IN WALL TO WATER CLOSET AND CONNECT. 4" SAN DOWN AND 2" VENT UP.
13	2" VENT FROM BELOW.
14	ROUTE 3/4" CW & HW PIPING IN WALL TO SINK. ROUTE A 3/4" CW & HW LINE UNDER COUNTER TO AN ASSE 1070 THERMO STATIC MIXING VALVE & CONNECT. ROUTE 3/4" TEPID WATER LINE FROM FIXTURE TO HOT WATER SERVICE OF SINK AND CONNECT. CONNECT 1 1/2" P-TRAP TO DRAIN. 2" SAN DOWN AND 2" VENT UP.
15	3" VENT UP THROUGH ROOF.
16	RECIRCULATION PUMP SEE DETAIL 9/P6.01 FOR INSTILLATION.
17	WATER HEATER SEE 9/P601 FOR CONNECTIONS
18	ROUTE 3/4" CW & HW PIPING IN WALL TO SHOWER DIVERTER VALVE. PROVIDE ASSE 1070 THERMO STATIC MIXING VALVE & CONNECT. ROUTE 3/4" TEPID WATER LINE FROM FIXTURE TO HOT WATER SERVICE OF SINK AND CONNECT. CONNECT 1 1/2" P-TRAP TO DRAIN. 2" SAN DOWN AND 2" VENT UP.
19	INSTALL WATER HEATER UNDER COUNTER AT 18" A.F.F. SEE DETAIL 9/P601
20	ALL PIPING WITHIN MECHANICAL ROOM TO BE PLENUM RATED.

TEXAS PARKS & WILDLIFE

STATE OF TEXAS
JACOB FRITSCH
136264
LICENSED
PROFESSIONAL ENGINEER
04/27/2021

PDG ARCHITECTS
10000 RICHMOND
SUITE 100
HOUSTON, TX 77042
713-629-6100

MATHIS FISHERIES OFFICE
AT LAKE CORPUS CHRISTI, MATHIS, TEXAS
PROJECT NUMBER: 127144

DATE:	04-23-2021
DESIGNED BY:	JLF
DRAWN BY:	AC
REVIEWED BY:	JLF
REVISED:	
REVISED:	

SHEET TITLE
PLUMBING FLOOR PLAN

SHEET NUMBER
P2.01

PERCENTAGE: BID SET

PRESTIGE ENGINEERING SERVICES
TBPE Registration Number 18865
909 NE Loop 410, Suite 818
San Antonio, Texas 78209
210.686.0444
www.InfinityMEP.com

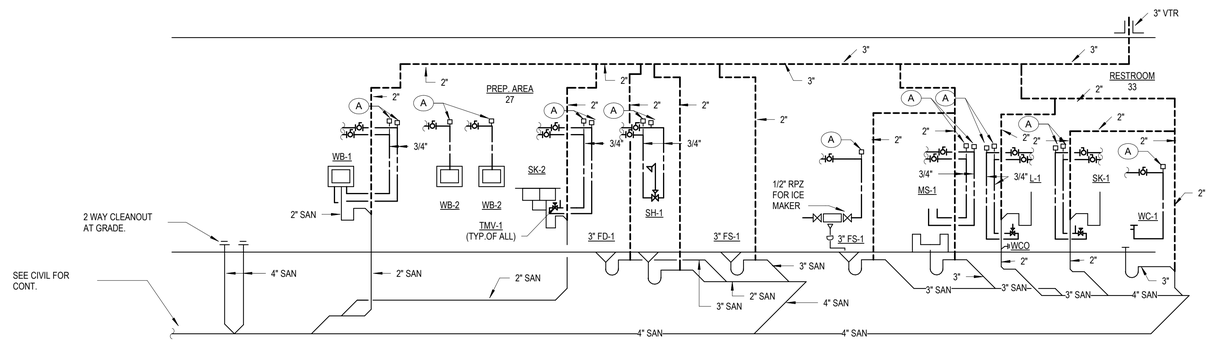

2 PLUMBING RISER DIAGRAM (EAST BLDG.)

NO SCALE

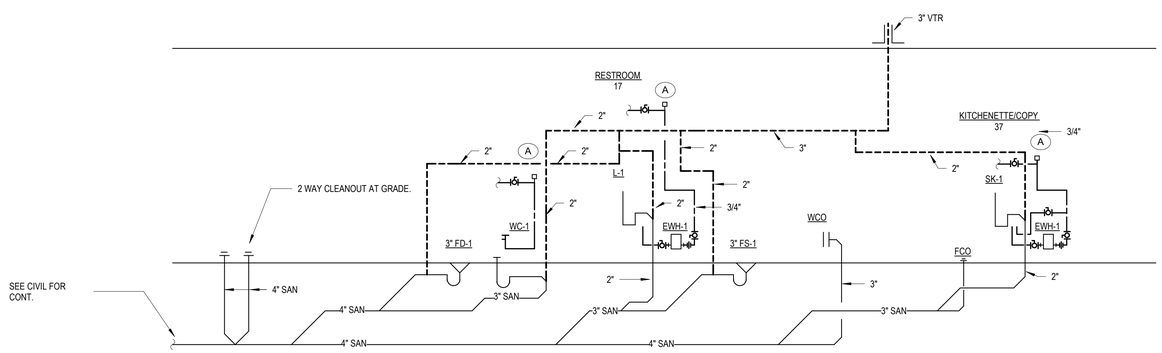

1 PLUMBING RISER DIAGRAM (WEST BLDG.)

NO SCALE

TEXAS PARKS & WILDLIFE

STATE OF TEXAS
JACOB FRITSCH
136264
LICENSED
PROFESSIONAL ENGINEER
04/23/2021

PDG ARCHITECTS

10000 RICHMOND
SUITE 100
HOUSTON, TX 77042
713-629-6100

MATHIS FISHERIES OFFICE

AT LAKE CORPUS CHRISTI, MATHIS, TEXAS

PROJECT NUMBER: 127144

DATE: 04-23-2021
DESIGNED BY: TA
DRAWN BY: Author
REVIEWED BY: Approver
REVISED:
REVISED:

SHEET TITLE
PLUMBING RISER DIAGRAM

SHEET NUMBER
P5.00

PERCENTAGE: BID SET

PRESTIGE ENGINEERING SERVICES

TBPE Registration Number 18865
909 NE Loop 410, Suite 818
San Antonio, Texas 78209
210.686.0444
www.InfinityMEP.com

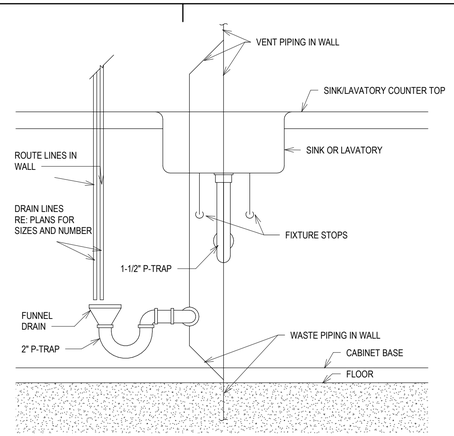

8 INDIRECT RECEPTOR DETAIL
NOT TO SCALE

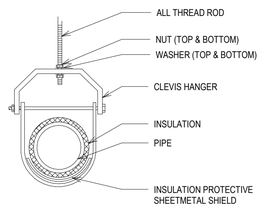

10 TYPICAL CLEVIS HANGER DETAIL
NOT TO SCALE

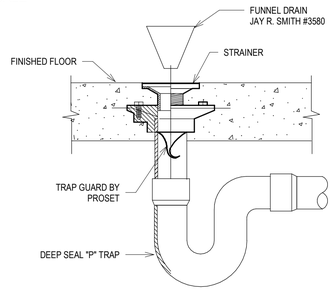

7 FLOOR DRAIN / FUNNEL DRAIN DETAIL
NOT TO SCALE

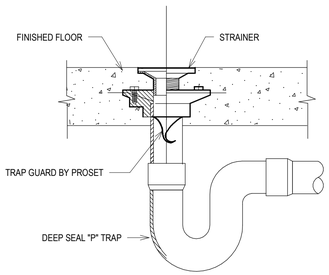

6 FLOOR DRAIN DETAIL
NOT TO SCALE

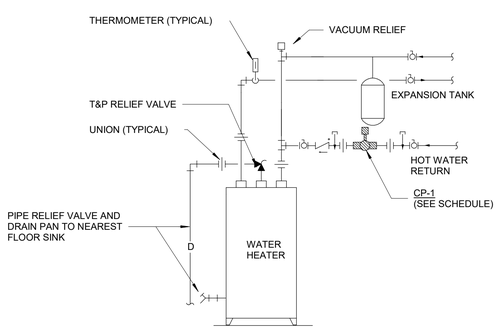

NOTES:
1. TEMPERATURE RISE OF WATER IS TO BE ABOUT 90 DEGREES
2. HEATERS SHALL BE UL OR FM LISTED AND SHALL MEET ALL ENERGY CONSERVATION CODE REQUIREMENTS OF THE AUTHORITY HAVING JURISDICTION
3. REFER TO FLOORPLANS AND RISER DIAGRAMS FOR PIPE SIZING.
4. INSULATE ALL HOT WATER PIPING PER THE SPECIFICATIONS.
5. INSULATE ALL COLD WATER PIPING FOR THE WATER HEATER PER MOST CURRENT IECC.

9 ELECTRIC WATER HEATER PIPING DIAGRAM-WITH CIRCULATING PUMP
NOT TO SCALE

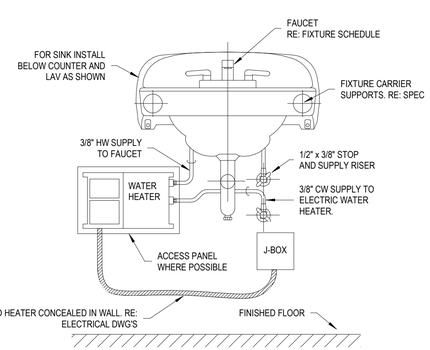

5 INSTANTANEOUS ELECTRIC WATER HEATER DETAIL
NOT TO SCALE

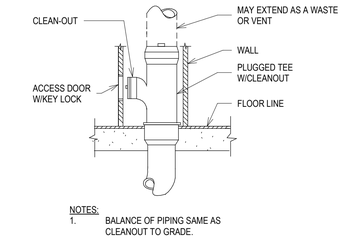

NOTES:
1. BALANCE OF PIPING SAME AS CLEANOUT TO GRADE.

4 WALL CLEANOUT DETAIL
NOT TO SCALE

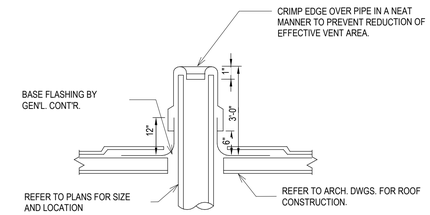

PLUMBING VENT THROUGH FLAT ROOF DETAIL

3 VENT THRU ROOF DETAIL
NOT TO SCALE

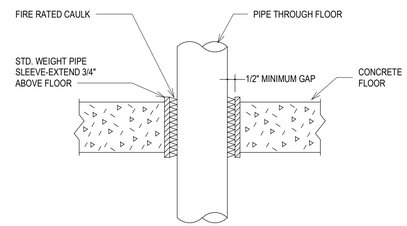

PIPE SLEEVE THROUGH FLOOR DETAIL

2 PIPE SLEEVE THROUGH FLOOR DETAIL
NOT TO SCALE

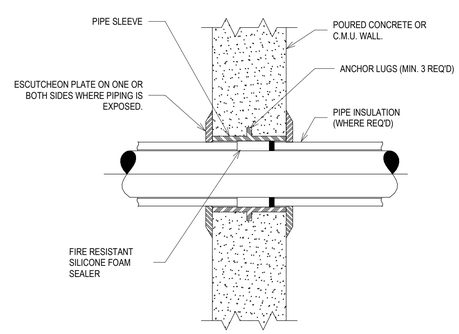

PIPE SLEEVE THROUGH WALL DETAIL

NOTES:
1. FOR INTERIOR WALLS AND BELOW GRADE GROUND TO GROUND WALLS.

1 PIPE SLEEVE THROUGH WALL DETAIL
NOT TO SCALE

PRESTIGE ENGINEERING SERVICES
TBPE Registration Number 18865
909 NE Loop 410, Suite 818
San Antonio, Texas 78209
210.686.0444
www.InfinityMEP.com

TEXAS PARKS & WILDLIFE

STATE OF TEXAS
JACOB FRITSCH
136264
LICENSED PROFESSIONAL ENGINEER
04/23/2021

PDG ARCHITECTS
10000 RICHMOND
SUITE 100
HOUSTON, TX 77042
713-629-6100

MATHIS FISHERIES OFFICE
AT LAKE CORPUS CHRISTI, MATHIS, TEXAS
PROJECT NUMBER: 127144

DATE:	04-23-2021
DESIGNED BY:	JLF
DRAWN BY:	AC
REVIEWED BY:	JLF
REVISED:	
REVISED:	

SHEET TITLE
PLUMBING DETAILS

SHEET NUMBER
P6.01

PERCENTAGE: BID SET

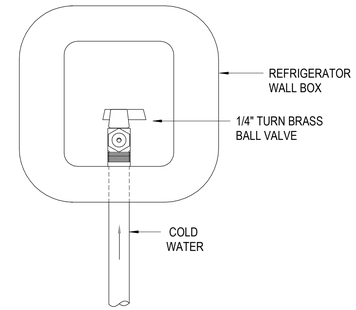

3 WALL BOX DETAIL
NOT TO SCALE

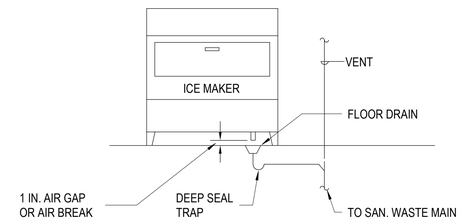

2 ICE MAKER DRAINAGE PIPING DETAIL
NOT TO SCALE

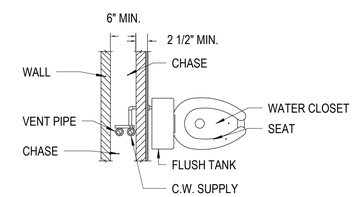

PLAN VIEW

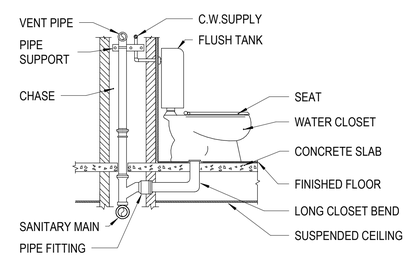

ELEVATION

NOTE:
1. FOR CONTINUATION OF PIPING SEE PLANS.
2. MINIMUM CHASE SPACE SHOWN MUST BE CLEAR SPACE. NO STEEL STUDS OR OTHER IMPEDIMENTS CAN BE INSTALLED IN THIS SPACE.

1 SINGLE FLOOR MOUNTED WATER CLOSET DETAIL
NOT TO SCALE

PRESTIGE
ENGINEERING SERVICES
TBPE Registration Number 18865
909 NE Loop 410, Suite 818
San Antonio, Texas 78209
210.686.0444
www.InfinityMEP.com

TEXAS PARKS & WILDLIFE

STATE OF TEXAS
JACOB FRITSCH
136264
LICENSED
PROFESSIONAL ENGINEER
04/23/2021

PDG ARCHITECTS
10000 RICHMOND
SUITE 100
HOUSTON, TX 77042
713-629-6100

MATHIS FISHERIES OFFICE
AT LAKE CORPUS CHRISTI, MATHIS, TEXAS
PROJECT NUMBER: 127144

DATE:	04-23-2021
DESIGNED BY:	TA
DRAWN BY:	Author
REVIEWED BY:	Approver
REVISED:	
REVISED:	

SHEET TITLE
PLUMBING DETAILS

SHEET NUMBER
P6.02

PERCENTAGE: BID SET