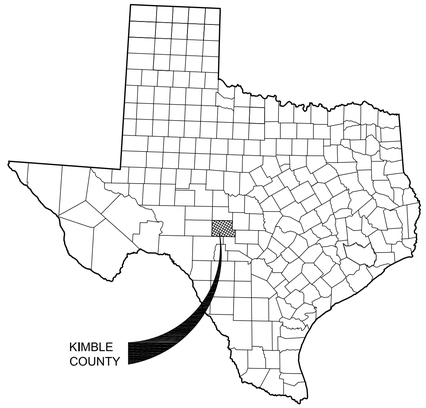


## COUNTY LOCATION MAP

NOT TO SCALE

NORTH

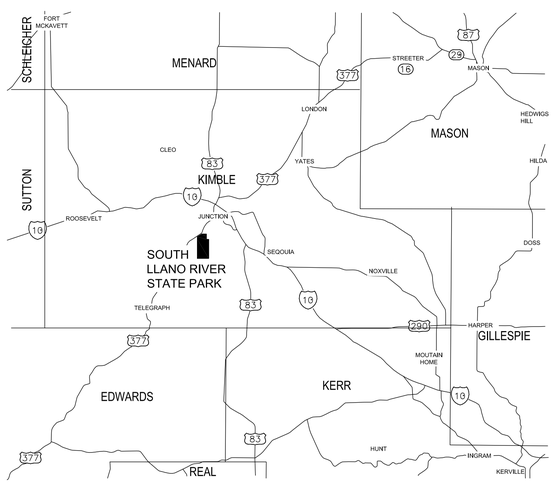


## VICINITY MAP

NOT TO SCALE

NORTH

## SOUTH LLANO RIVER STATE PARK

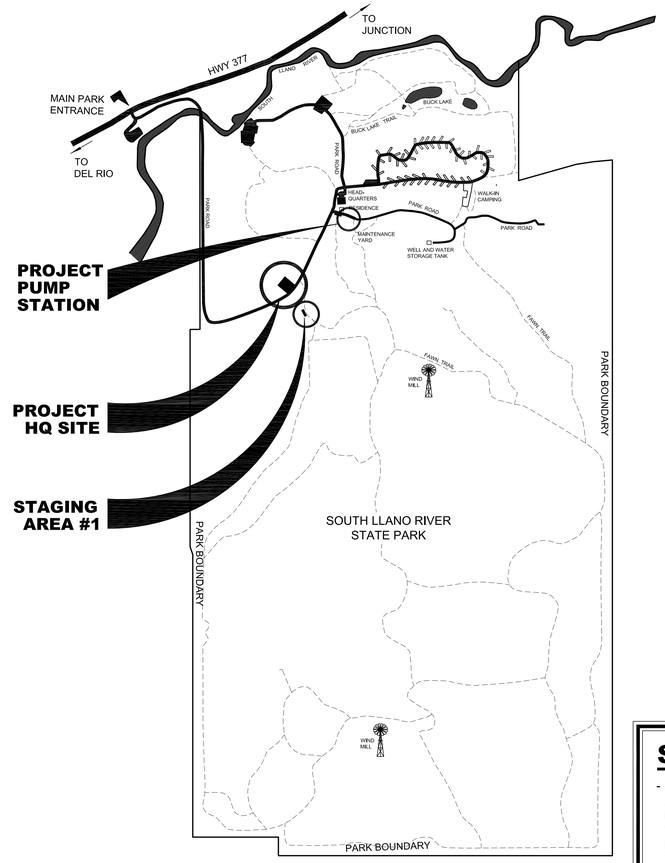


## SITE LOCATION MAP

NOT TO SCALE

NORTH

# PROJECT

## SOUTH LLANO RIVER STATE PARK

### HEADQUARTERS BUILDING RENOVATION AND EXPANSION

PROJECT NO: 134245 DATE: April 2021

## INDEX OF DRAWINGS


| SHEET NO. | DESCRIPTION |
|---|---|
| COVER SHEET | |
| LSP100 | LIFE SAFETY PLAN |
| C100 | EXISTING CONDITIONS AND DEMOLITION PLAN |
| C101 | EXISTING WATER TREATMENT PLANT CONDITIONS AND DEMOLITION PLAN |
| C200 | EROSION AND SEDIMENTATION CONTROL PLAN |
| C201 | EROSION AND SEDIMENTATION CONTROL PLAN 2 |
| C202 | EROSION AND SEDIMENTATION CONTROL PLAN 3 |
| C300 | OFFSITE DRAINAGE AREA MAP |
| C400 | OVERALL SITE PLAN |
| C401 | SITE PLAN |
| C500 | GRADING PLAN |
| C600 | UTILITY PLAN |
| C700 | DETAILS SHEET |
| C800 | SEPTIC SYSTEM DESIGN |
| C900 | PUMP STATION SITE PLAN |
| C901 | WATERLINE PLAN & PROFILE A |
| C902 | WATERLINE PLAN & PROFILE B |
| C903 | WATERLINE PLAN & PROFILE C |
| C904 | WATERLINE PLAN & PROFILE D |
| C905 | PROCESS DIAGRAM |
| C906 | PUMP STATION PLAN VIEW |
| C907 | PUMP STATION DETAILS |
| C908 | PUMP STATION DETAILS 2 |
| C909 | PUMP STATION DETAILS 3 |
| L300 | TREE PRESERVATION PLAN |
| L301 | TREE PRESERVATION AND LANDSCAPE DETAILS |
| L302 | LANDSCAPE PLAN |
| G101 | REFERENCE SYMBOLS AND ABBREVIATIONS |
| A201 | FLOOR PLAN |
| A202 | ROOF PLAN |
| A203 | TUBE STORAGE |
| A301 | EXTERIOR ELEVATIONS |
| A302 | BUILDING SECTIONS |
| A303 | BUILDING SECTIONS |
| A401 | ROOM & DOOR SCHEDULES |
| A402 | WINDOW SCHEDULE |
| A501 | REFLECTED CEILING PLAN |
| A502 | FURNITURE PLAN |
| A503 | FURNITURE SCHEDULE |
| A601 | INTERIOR ELEVATIONS |
| A602 | INTERIOR ELEVATIONS |
| A603 | INTERIOR ELEVATIONS |
| A701 | EXTERIOR WALL SECTIONS |
| A702 | EXTERIOR WALL SECTIONS |
| A703 | EXTERIOR WALL SECTIONS |
| A704 | INTERIOR WALL TYPES |
| A801 | PLAN DETAILS |
| A802 | SECTION DETAILS |
| A803 | SECTION DETAILS |
| A804 | CONSTRUCTION DETAILS |
| A805 | DOOR DETAILS |
| A806 | DOOR & WINDOW DETAILS |
| A901 | CASEWORK DETAILS |
| A902 | CASEWORK DETAILS |
| A903 | CASEWORK DETAILS |
| S100 | GENERAL NOTES |
| S101 | GENERAL NOTES |
| S102 | 3D VIEWS |
| S201 | FOUNDATION PLAN |
| S202 | ROOF FRAMING PLAN |
| S203 | AWNING FRAMING AND PUMP STATION FOUNDATION PLAN |
| S204 | TUBE STORAGE BLDG PLANS |
| S300 | CONCRETE TYPICAL DETAILS |
| S301 | CONCRETE TYPICAL DETAILS |
| S302 | CONCRETE TYPICAL DETAILS |
| S310 | CONCRETE DETAILS |
| S311 | CONCRETE DETAILS |
| S500 | STEEL TYPICAL DETAILS |
| S501 | STEEL TYPICAL DETAILS |
| S510 | STEEL DETAILS |
| S600 | WOOD TYPICAL DETAILS |
| S601 | WOOD TYPICAL DETAILS |
| S602 | WOOD TYPICAL DETAILS |
| S610 | WOOD DETAILS |
| S611 | WOOD DETAILS |
| S612 | WOOD DETAILS |
| S613 | WOOD DETAILS |
| S614 | WOOD DETAILS |
| M000 | MECHANICAL SYMBOLS AND ABBREVIATIONS |
| M101 | MECHANICAL FLOOR PLAN |
| M300 | MECHANICAL SCHEDULES |
| M500 | MECHANICAL DETAILS |
| M501 | MECHANICAL DETAILS |
| E000 | ELECTRICAL SYMBOLS AND ABBREVIATIONS |
| E001 | SITE PLAN |
| E002 | ENLARGED ELECTRICAL SITE PLAN |
| E101 | LIGHTING AND FIRE ALARM PLAN |
| E201 | POWER PLAN |
| E201M | MECHANICAL POWER FLOOR PLAN |
| E202 | PUMP STATION POWER PLAN |
| E203 | PUMP STATION POWER PLAN |
| E204 | TUBE SHED PLAN - ELECTRICAL |
| E401 | ELECTRICAL ONE-LINE HEADQUARTERS |
| E402 | ELECTRICAL ONE-LINE PUMPING STATION |
| E501 | ELECTRICAL SCHEDULES |
| E601 | ELECTRICAL DETAILS NO.1 |
| E602 | ELECTRICAL DETAILS NO.2 |
| P000 | PLUMBING SYMBOLS AND ABBREVIATIONS |
| P101 | PLUMBING OVERALL PLAN |
| P201 | ENLARGED UNDERFLOOR PLUMBING PLAN |
| P202 | TUBE SHED PLAN - PLUMBING |
| P300 | PLUMBING SCHEDULES |
| P500 | PLUMBING DETAILS |
| T000 | TECHNOLOGY SYM. AND ABRV. |
| T101 | TECHNOLOGY SITEPLAN |
| T201 | TECHNOLOGY FLOOR PLAN |
| T300 | TECHNOLOGY TYP. DETAILS |


## SCOPE OF WORK

- CONSTRUCT NEW HEADQUARTERS FACILITY WITH PEDESTRIAN ACCESS FROM PARKING AREAS (BY TXDOT). CONSTRUCT NEW UTILITIES TO THE HEADQUARTERS BUILDING INCLUDING WATER, WASTEWATER, AND ELECTRICAL UTILITY EXTENSIONS AND UPGRADES. FINAL ROADWAYS AND PARKING BY TXDOT UNDER SEPARATE TIMELINE.
- ALTERNATE #1 : CLOSED CELL ICYNENE BETWEEN RAFTERS WITH T&G DECKING SURFACE APPLIED TO BOTTOM OF PURLINS. 3/4" CDX SHEATHING W/ HIGH TEMP SELF ADHESIVE UNDERLAYMENT

## BUILDING CODE SUMMARY

A. INTERNATIONAL CODE COUNCIL

| | |
|---|---|
| i. BUILDING CODE | INTERNATIONAL BUILDING CODE 2015 |
| ii. RESIDENTIAL CODE | INTERNATIONAL RESIDENTIAL CODE 2015 |
| iii. EXISTING BUILDINGS | INTERNATIONAL EXISTING BUILDINGS CODE 2015 |
| iv. STRUCTURAL CODE | INTERNATIONAL BUILDING CODE 2015 |
| v. PLUMBING CODE | INTERNATIONAL PLUMBING CODE 2015 |
| vi. MECHANICAL CODE | INTERNATIONAL MECHANICAL CODE 2015 |
| vii. ENERGY CODE | INTERNATIONAL ENERGY CODE 2015 |
| viii. GAS CODE | INTERNATIONAL FUEL GAS CODE 2015 |

B. NATIONAL FIRE PROTECTION ASSOCIATION

| | |
|---|---|
| i. ELECTRICAL CODE | NATIONAL ELECTRICAL CODE NFPA-70 2020 |
| ii. FIRE CODE | NFPA-1 2015 |
| iii. LIFE SAFETY CODE | NFPA-101 2015 |

C. STATE ENERGY CONSERVATION OFFICE/TEXAS COMPTROLLERS OFFICE

i. ENERGY CODES FOR STATE BUILDINGS Title 34, Part 1, Ch. 19, Sb.C, Rule 19.31
1. COMPLIANCE WITH THE ENERGY CONSERVATION DESIGN STANDARD OF THE AMERICAN SOCIETY OF HEATING, REFRIGERATION AND AIR CONDITIONING ENGINEERS (ASHRAE) / ILLUMINATING ENGINEERING SOCIETY OF NORTH AMERICA (IESNA), ENERGY STANDARD FOR BUILDINGS, ASHRAE/IESNA STANDARD 90.1 (2013)

ii. WATER CONSERVATION STANDARDS FOR STATE BUILDINGS - Energy Conservation Design Standards: Texas Administrative Code, Title 34, Part 1,Ch.19, Subchapter C (link)
a. COMPLIANCE WITH THE WATER CONSERVATION DESIGN STANDARDS FOR STATE BUILDINGS AND INSTITUTIONS OF HIGHER EDUCATION FACILITIES, STATE ENERGY CONSERVATION OFFICE (SECO), 2016

D. ACCESSIBILITY CODE

i. U.S. DEPT. OF JUSTICE, 2010 ADA STANDARDS FOR ACCESSIBLE DESIGN
ii. U.S. DEPT. OF JUSTICE. ARCHITECTURAL BARRIERS ACT, ACCESSIBILITY GUIDELINES FOR OUTDOOR DEVELOPED AREAS ON FEDERAL LANDS, EFFECTIVE NOVEMBER-25-2013
iii. 2012 TEXAS ACCESSIBILITY STANDARDS, ELIMINATION OF ARCHITECTURAL BARRIERS, TEXAS GOVERNMENT CODE, CHAPTER 469

E. PLAYGROUND SAFETY CODE

i. ASTM F1487-17, STANDARD CONSUMER SAFETY PERFORMANCE SPECIFCATIONS FOR PLAYGROUND EQUIPMENT FOR PUBLIC USE
ii. ASTM F2223-15, STANDARD GUIDE FOR ASTM STANDARDS ON PLAYGROUND SURFACING

## TPWD TEAM


**PROJECT MANAGER**
Jenna Clayton
Texas Parks & Wildlife
512-389-8625
512-389-4757 (fax)
Jenna.Clayton@tpwd.texas.gov

**ARCHITECT/DESIGN MGR**
Andrea Kabala, Architect
Texas Parks & Wildlife
512-389-8730
512-389-4790 (fax)
Andrea.Kabala@tpwd.texas.gov

**PARK MANAGER**
Scott Whitener
Texas Parks & Wildlife
352-446-3994
325-446-4534 (fax)
scott.whitener@tpwd.texas.gov

**CONTRACT MANAGER**
Michael Polendo
Texas Parks & Wildlife
512-387-8728
512-389-4790 (fax)
Michael.Polendo@tpwd.texas.gov

**CONSTRUCTION MANAGER**
Don Hudson
Texas Parks & Wildlife
512-627-4190
don.hudson@tpwd.texas.gov

**INSPECTOR**
Earl Spurlock
Texas Parks & Wildlife
512-332-2262
512-332-2262 (fax)
earl.spurlock@tpwd.texas.gov


## DESIGN TEAM


**ARCHITECT :**
**Ford, Powell & Carson, Inc.**
Allison Chambers, AIA
210-226-1246
achambers@fpcarch.com

**CODE CONSULTANT :**
**Protection Development, Inc.**
David Emler
210-828-7533
demler@pdifire.com

**MEP :**
**Cleary Zimmermann Engineers, LLC**
Thomas Watson, PE
210-447-6100
thomasw@clearyzimmermann.com

**LANDSCAPE ARCHITECT :**
**CFZ Group, LLC**
Leticia Zavala, ASLA
210-366-1911
lazavala@cfzgroup.com

**CIVIL ENGINEER :**
**Garza EMC, LLC**
Julia Mrnak, PE
512-298-3284
jmrnak@garzaemc.com

**STRUCTURAL :**
**Architectural Engineers Collaborative, LLC**
Karina Tribble, PE
512-472-2111
ktribble@aecollab.com


# TEXAS PARKS AND WILDLIFE

## INFRASTRUCTURE DIVISION

4200 SMITH SCHOOL ROAD · AUSTIN, TEXAS 78744-3292

REGISTERED ARCHITECT RACHEL L.N. WRIGHT 20940 STATE OF TEXAS

skabala 04/27/2021 11:48:20 AM

TEXAS PARKS & WILDLIFE RELEASED FOR SOLICITATION INFRASTRUCTURE DIVISION

CONSTRUCTION DOCUMENTS

SET NO:

Path: \\FRENAS\Projects\92706_S_llano_SP\(17) Drawings\(8) CD's 100 Percent\(2) Headquarters\llano134245_cov.dwg

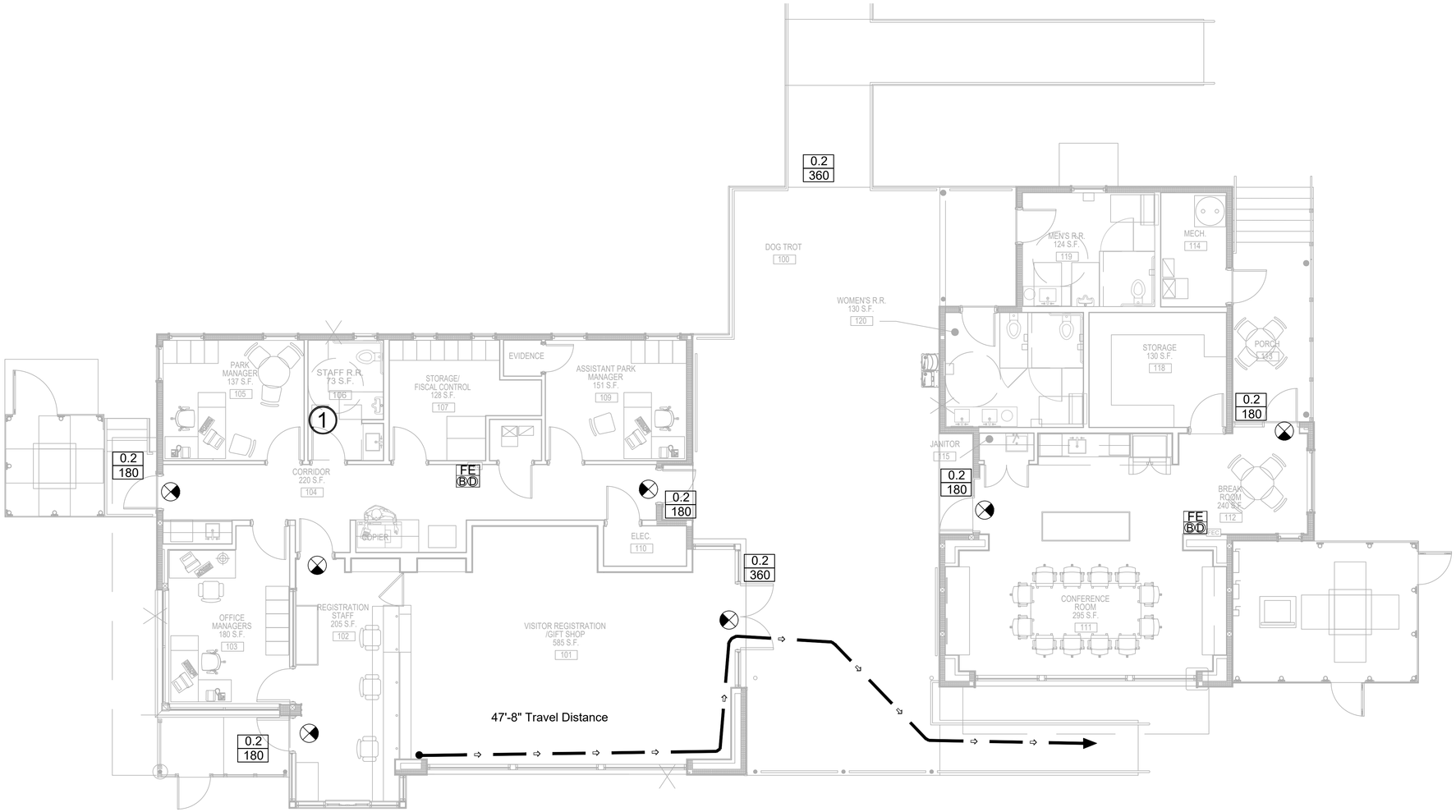


## 1 LIFE SAFETY PLAN

SCALE: 3/16"

16' 8' 0' 16'

PLAN NORTH

**General Notes - Portable Fire Extinguishers:**

FE — Portable Fire Extinguisher
#/# — Extinguisher Type and Mounting Detail

(A) Final location and quantity of portable fire extinguishers may be modified upon final field inspection of the Fire Inspector.
(B) All multi-purpose dry chemical portable fire extinguishers to have a UL Rating of 3A:40BC. Provide Potter Roemer Model 3005-3 or equal.
(C) Fire extinguisher placement in all other areas (light hazard) is based upon IBC Table 906.3(1) with a maximum distance of travel to extinguishers of 75 feet.
(D) Unless otherwise directed by the architect, provide a fire extinguisher cabinet, JL Products Model 99GT (Recessed).
(E) Fire extinguisher to be mounted on hook (no cabinet required).

**Portable Fire Extinguisher Inventory**

| Floor | Quantity | | Total |
|---|---|---|---|
| | Multi-Purpose Dry Chemical | Class K Wet Chemical | |
| First Floor | 2 | 0 | 2 |
| Total | 2 | 0 | 2 |

**Key Note(s)**

1. Corridor 104 will not be rated based on IBC 1020.1, Exception 4.

**Applicable Code:**

2015 International Building Code
2015 International Fire Code

**Basic Building Information**

| | |
|---|---|
| Primary Building Occupancy: | Group A3 (Museum) and Group B (Offices) |
| Building Construction: | Type VB |
| Building Height Classification: | Single Story |
| Automatic Sprinkler System: | No |
| Fire Alarm System: | No |
| Smoke Detection: | Yes, See MEP Drawings for Locations |

Per the State Fire Marshal, the building will not require a fire hydrant, a sprinkler system, or a fire alarm system. However, smoke detection will be required.

**Allowable Area (Group A3)**

| | |
|---|---|
| Basic Area per Floor: | 6,000 SF |
| Yard Increase (75%): | 4,500 SF |
| Total Allowable Area per Floor: | 10,500 SF |
| Actual Building Total Area: | 4,055 SF |
| Compliance: | YES |

**Egress Information**

| | |
|---|---|
| Floor Occupant Load: | 161 |
| # Exits Required: | 2 |
| # Exits Provided: | 5 |
| Door Exit Width Required: | 2.7' |
| Door Exit Width Provided: | 18.5' |
| Maximum Allowed Travel Distance: | 200' |

**Occupant Load Calculations**

| Room Number | Room Name | Area | Use | Factor | Occupant Load |
|---|---|---|---|---|---|
| 100 | Dog Trot | 1,123 | assembly | 15 | 75.0 |
| 101 | Visitor Registration/Gift Shop | 585 | museum | 30 | 20.0 |
| 102 | Registration Staff | 205 | office | 100 | 3.0 |
| 103 | Manager's Office | 180 | office | 100 | 2.0 |
| 104 | Corridor | 220 | corridor | 100 | 3.0 |
| 105 | Park Manager | 137 | office | 100 | 2.0 |
| 106 | Staff Restroom | 73 | restroom | 100 | 1.0 |
| 107 | Storage/Fiscal Control | 128 | storage | 300 | 1.0 |
| 108 | Mechanical | 9 | mechanical | 300 | 1.0 |
| 109 | Assistant Park Manager | 151 | office | 100 | 2.0 |
| 110 | Electrical | 29 | mechanical | 300 | 1.0 |
| 111 | Conference Room | 295 | assembly | 15 | 20.0 |
| 112 | Break Room | 240 | assembly | 15 | 16.0 |
| 113 | Porch | 93 | assembly | 15 | 7.0 |
| 114 | Mechanical | 62 | mechanical | 300 | 1.0 |
| 115 | Janitor | 15 | office | 100 | 1.0 |
| 118 | Storage | 130 | storage | 300 | 1.0 |
| 119 | Mens Restroom | 124 | restroom | 100 | 2.0 |
| 120 | Womens Restroom | 130 | restroom | 100 | 2.0 |
| | | | | TOTAL CALCULATED OCCUPANT LOAD | 161 |

**SYMBOLS & ABBREVIATIONS** (ALL MAY NOT APPLY)

0.2 / ### — Level egress width per person served (Inch, IBC 1005.1); Calculated number of persons served (Divide scaled clear egress width by 0.2" / person served)

0.3 / ### — Stair egress width per person served (Inch, IBC 1005.1); Calculated number of persons served (Divide scaled clear egress width by 0.3" / person served)

Exit Sign (See electrical drawings for details).

Denotes scaled travel distance to an exit.

FE / #/# — Portable Fire Extinguisher; Extinguisher Type and Mounting Detail

1-Hour Fire Partition
2-Hour Fire Wall
3-Hour Fire Wall
4-Hour Fire Wall
1-Hour Fire Barrier
2-Hour Fire Barrier
3-Hour Fire Barrier
Smoke Barrier
Smoke Partition


JAMES R. GRIFFITH, JR.
77757
REGISTERED PROFESSIONAL ENGINEER

Protection Development Incorporated
Fire Protection Engineering
8620 N. New Braunfels Ave., Suite 100
San Antonio, Texas 78217
Phone: 210.828.7533
www.PDIFire.com
Texas Registered Engineering Firm F-2816



© 1985-2021. Protection Development, Inc. (PDI). This document, being designed and saved on electronic media, shall not be altered or amended in any format or medium by any party other than PDI.



FORD POWELL & CARSON Architects & Planners, Inc.
Architecture Planning Preservation Interior Design
711 Navarro, Suite 400
San Antonio, Texas 78205
210/226-1246
92706


TEXAS PARKS & WILDLIFE

# SOUTH LLANO RIVER STATE PARK
## HEADQUARTERS BUILDING RENOVATION AND EXPANSION
PROJECT NUMBER: 134245

DATE: 04.09.2021
DESIGNED BY: ---
DRAWN BY: mme
REVIEWED BY: DRE
REVISED:
REVISED:
REVISED:

CONSTRUCTION DOCUMENTS

SHEET TITLE
LIFE SAFETY PLAN

SHEET NUMBER
LSP100


PATH: P:\2017 Projects\17-0095 South Llano State Park CC\DWG\17-0095 South Llano State Park HQ (for Construction).dwg

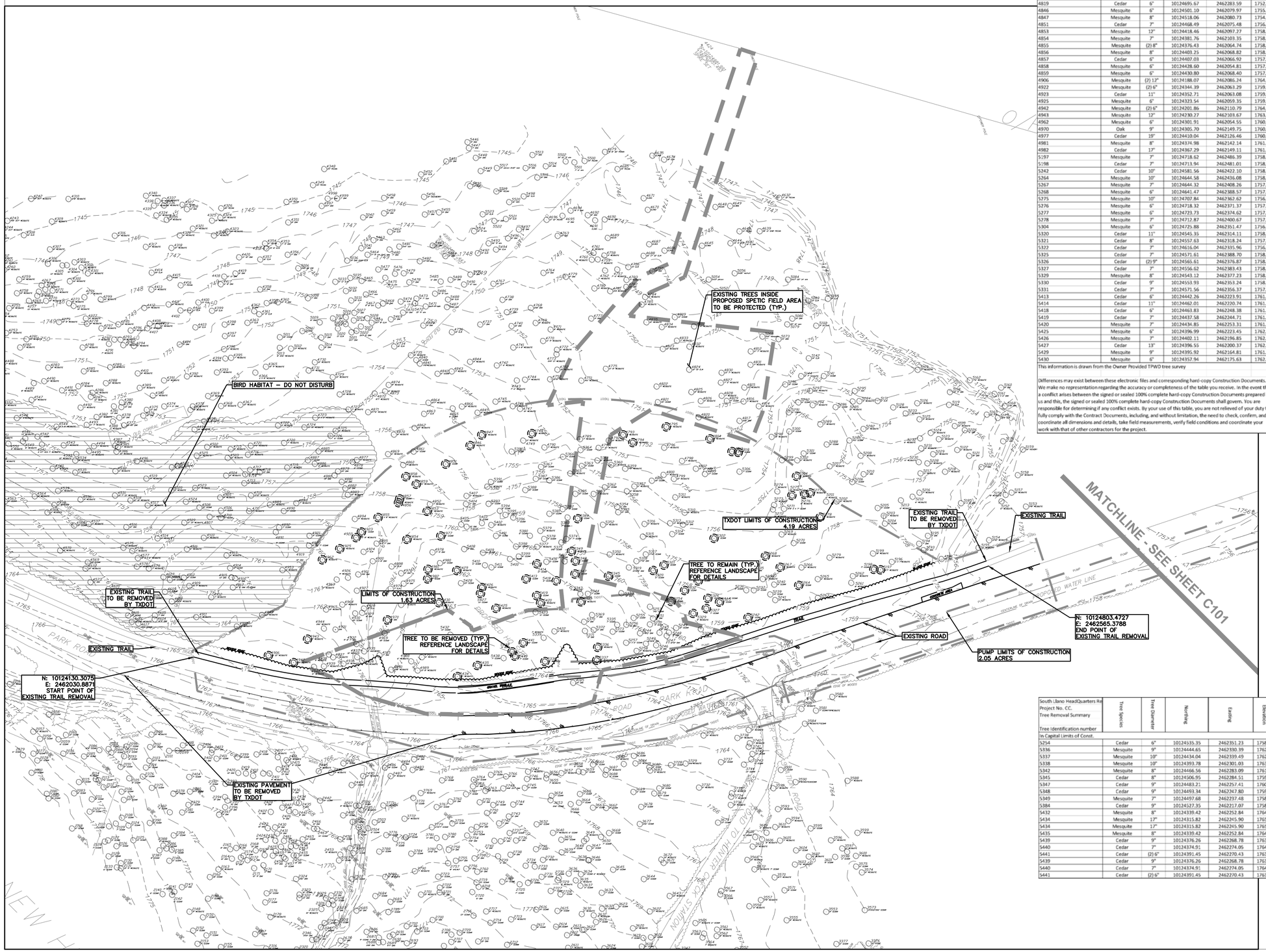


| South Llano HeadQuarters Re<br>Project No. CC.<br>Tree Removal Summary<br><br>Tree Identification number<br>in TxDOT limits of Const. | Tree Species | Tree Diameter | Northing | Easting | Elevation |
|---|---|---|---|---|---|
| 4748 | Mesquite | 10" | 10124557.16 | 2462117.71 | 1753.35 |
| 4793 | Mesquite | 7" | 10124625.57 | 2462188.09 | 1751.87 |
| 4794 | Mesquite | 6" | 10124627.04 | 2462201.38 | 1751.91 |
| 4795 | Mesquite | 10" | 10124664.43 | 2462214.89 | 1751.36 |
| 4804 | Mesquite | 6" | 10124688.50 | 2462257.21 | 1751.96 |
| 4818 | Cedar | 7" | 10124699.81 | 2462288.98 | 1752.68 |
| 4819 | Cedar | 6" | 10124695.67 | 2462283.59 | 1752.56 |
| 4846 | Mesquite | 6" | 10124501.10 | 2462079.97 | 1755.26 |
| 4847 | Mesquite | 8" | 10124518.06 | 2462080.73 | 1754.75 |
| 4851 | Cedar | 7" | 10124468.49 | 2462075.48 | 1756.33 |
| 4853 | Mesquite | 12" | 10124418.46 | 2462097.27 | 1758.74 |
| 4854 | Mesquite | 7" | 10124381.76 | 2462103.35 | 1758.97 |
| 4855 | Mesquite | (2) 8" | 10124376.43 | 2462064.74 | 1758.89 |
| 4856 | Mesquite | 8" | 10124403.25 | 2462068.82 | 1758.21 |
| 4857 | Cedar | 6" | 10124407.03 | 2462066.92 | 1757.87 |
| 4858 | Mesquite | 6" | 10124428.60 | 2462054.81 | 1757.40 |
| 4859 | Mesquite | 6" | 10124430.80 | 2462068.40 | 1757.37 |
| 4906 | Mesquite | (2) 12" | 10124188.07 | 2462086.24 | 1764.70 |
| 4922 | Mesquite | (2) 6" | 10124344.39 | 2462063.29 | 1759.24 |
| 4923 | Cedar | 11" | 10124352.71 | 2462063.08 | 1759.07 |
| 4925 | Mesquite | 6" | 10124323.54 | 2462059.35 | 1759.59 |
| 4942 | Mesquite | (2) 6" | 10124201.86 | 2462110.79 | 1764.45 |
| 4943 | Mesquite | 12" | 10124230.27 | 2462103.67 | 1763.48 |
| 4962 | Mesquite | 6" | 10124301.91 | 2462054.55 | 1760.13 |
| 4970 | Oak | 9" | 10124305.70 | 2462149.75 | 1760.79 |
| 4977 | Cedar | 19" | 10124410.04 | 2462126.46 | 1760.90 |
| 4981 | Mesquite | 8" | 10124374.98 | 2462142.14 | 1761.93 |
| 4982 | Cedar | 17" | 10124367.29 | 2462149.11 | 1761.97 |
| 5197 | Mesquite | 7" | 10124718.62 | 2462486.39 | 1758.60 |
| 5198 | Cedar | 7" | 10124713.94 | 2462481.01 | 1758.83 |
| 5242 | Cedar | 10" | 10124581.56 | 2462422.10 | 1758.88 |
| 5264 | Mesquite | 10" | 10124644.58 | 2462436.08 | 1758.91 |
| 5267 | Mesquite | 7" | 10124644.32 | 2462408.26 | 1757.84 |
| 5268 | Mesquite | 8" | 10124641.47 | 2462388.57 | 1757.00 |
| 5275 | Mesquite | 10" | 10124707.84 | 2462362.62 | 1756.15 |
| 5276 | Mesquite | 6" | 10124718.32 | 2462371.37 | 1757.23 |
| 5277 | Mesquite | 6" | 10124723.73 | 2462374.62 | 1757.54 |
| 5278 | Mesquite | 7" | 10124712.87 | 2462400.67 | 1757.77 |
| 5304 | Mesquite | 6" | 10124725.88 | 2462351.47 | 1756.90 |
| 5320 | Cedar | 11" | 10124545.35 | 2462314.11 | 1758.12 |
| 5321 | Cedar | 8" | 10124557.63 | 2462318.24 | 1757.25 |
| 5322 | Cedar | 7" | 10124616.04 | 2462335.96 | 1756.50 |
| 5325 | Cedar | 7" | 10124571.61 | 2462388.70 | 1758.29 |
| 5326 | Cedar | (2) 9" | 10124565.61 | 2462376.87 | 1758.25 |
| 5327 | Cedar | 7" | 10124556.62 | 2462383.43 | 1758.63 |
| 5329 | Mesquite | 8" | 10124543.12 | 2462377.23 | 1758.82 |
| 5330 | Cedar | 9" | 10124553.93 | 2462353.24 | 1758.31 |
| 5331 | Cedar | 7" | 10124571.56 | 2462356.37 | 1757.77 |
| 5413 | Cedar | 6" | 10124442.26 | 2462223.91 | 1761.32 |
| 5414 | Cedar | 11" | 10124462.01 | 2462220.74 | 1761.03 |
| 5418 | Cedar | 6" | 10124463.83 | 2462248.38 | 1761.19 |
| 5419 | Cedar | 7" | 10124437.58 | 2462244.71 | 1761.65 |
| 5420 | Mesquite | 7" | 10124434.85 | 2462253.31 | 1761.89 |
| 5425 | Mesquite | 6" | 10124396.99 | 2462223.45 | 1762.66 |
| 5426 | Mesquite | 7" | 10124402.11 | 2462196.85 | 1762.12 |
| 5427 | Cedar | 13" | 10124396.55 | 2462200.37 | 1762.64 |
| 5429 | Mesquite | 9" | 10124395.92 | 2462164.81 | 1761.80 |
| 5430 | Mesquite | 6" | 10124357.94 | 2462175.63 | 1762.89 |

This information is drawn from the Owner Provided TPWD tree survey

Differences may exist between these electronic files and corresponding hard-copy Construction Documents. We make no representation regarding the accuracy or completeness of the table you receive. In the event that a conflict arises between the signed or sealed 100% complete hard-copy Construction Documents prepared by us and this, the signed or sealed 100% complete hard-copy Construction Documents shall govern. You are responsible for determining if any conflict exists. By your use of this table, you are not relieved of your duty to fully comply with the Contract Documents, including, and without limitation, the need to check, confirm, and coordinate all dimensions and details, take field measurements, verify field conditions and coordinate your work with that of other contractors for the project.

| South Llano HeadQuarters Re<br>Project No. CC.<br>Tree Removal Summary<br><br>Tree Identification number<br>in Capital Limits of Const. | Tree Species | Tree Diameter | Northing | Easting | Elevation |
|---|---|---|---|---|---|
| 5254 | Cedar | 6" | 10124535.35 | 2462351.23 | 1758.57 |
| 5336 | Mesquite | 9" | 10124444.65 | 2462330.39 | 1762.56 |
| 5337 | Mesquite | 10" | 10124434.04 | 2462339.49 | 1762.84 |
| 5338 | Mesquite | 10" | 10124393.78 | 2462301.03 | 1763.78 |
| 5342 | Mesquite | 8" | 10124466.56 | 2462283.09 | 1761.32 |
| 5345 | Cedar | 8" | 10124506.95 | 2462284.51 | 1759.95 |
| 5347 | Cedar | 9" | 10124483.21 | 2462257.41 | 1760.37 |
| 5348 | Cedar | 9" | 10124493.34 | 2462247.80 | 1759.84 |
| 5349 | Mesquite | 7" | 10124497.68 | 2462237.48 | 1758.73 |
| 5384 | Cedar | 9" | 10124527.35 | 2462217.07 | 1758.59 |
| 5432 | Mesquite | 8" | 10124339.42 | 2462252.84 | 1764.68 |
| 5434 | Mesquite | 17" | 10124315.82 | 2462245.90 | 1765.32 |
| 5434 | Mesquite | 17" | 10124315.82 | 2462245.90 | 1765.32 |
| 5435 | Mesquite | 8" | 10124339.42 | 2462252.84 | 1764.68 |
| 5439 | Cedar | 9" | 10124376.26 | 2462268.78 | 1763.94 |
| 5440 | Cedar | 7" | 10124374.91 | 2462274.05 | 1764.24 |
| 5441 | Cedar | (2) 6" | 10124391.45 | 2462270.43 | 1763.59 |
| 5439 | Cedar | 9" | 10124376.26 | 2462268.78 | 1763.94 |
| 5440 | Cedar | 7" | 10124374.91 | 2462274.05 | 1764.24 |
| 5441 | Cedar | (2) 6" | 10124391.45 | 2462270.43 | 1763.59 |

50 0 25 50 100

1" = 50'

## LEGEND

| EXISTING | DESCRIPTION |
|---|---|
| | CONTROL POINT |
| | POWER POLE |
| | DOWN GUY |
| | FIRE HYDRANT |
| | WATER VALVE |
| | WATER METER |
| | SIGN |
| | WOOD FENCE |
| —W— | WATER LINE |
| —OE— | OVERHEAD ELECTRIC |
| —678— | CONTOUR |
| 100.0 x | SPOT ELEVATION |
| 8"X | TREE TO REMAIN |
| 8"X | TREE TO BE REMOVED |
| | EDGE OF WOODS |
| | BIRD HABITAT – DO NOT DISTURB |
| | EDGE OF ASPHALT |
| | WOOD FENCE |
| | EDGE OF TRAIL |
| | LIMITS OF CONSTRUCTION |
| | TXDOT LIMITS OF CONSTRUCTION |
| | PUMP LIMITS OF CONSTRUCTION |

**COORDINATE SYSTEM FOR THE PLANS BASED ON:**

SOUTH LLANO RIVER STATE PARK

NEW HEADQUARTERS SITE

TOPOGRAPHIC SURVEY

Surveyed December, 2015

Tom E, and Ricco A.

NOTE:

Coordinates shown hereon are NAD83 (2011) (EPOCH: 2010.0000) Texas State Plane Coordinate System Central Zone grid values, in U.S. Survey Feet.

Elevations are NAVD88 values using Geoid 12-A

Both coordinates and elevations were derived by static GPS observations and NGS OPUS solutions on November 20, 2012.

TEXAS PARKS & WILDLIFE

STATE OF TEXAS
CHRIS M. ALLEN
131852
LICENSED PROFESSIONAL ENGINEER
04/08/2021

# SOUTH LLANO RIVER STATE PARK
## HEADQUARTERS BUILDING RENOVATION AND EXPANSION
PROJECT NUMBER: 134245

DATE: 04.09.2021
DESIGNED BY:
DRAWN BY:
REVIEWED BY:
REVISED:
REVISED:
REVISED:

CONSTRUCTION DOCUMENTS

garza EMC
7708 Rialto Blvd., Suite 125
Austin, Texas 78735
Tel. (512) 298-3284 Fax (512) 298-2592
TBPE # F-14629
Garza EMC, LLC © Copyright 2021

FORD POWELL &CARSON
Architects & Planners, Inc.
Architecture
Planning
Preservation
Interior Design
711 Navarro, Suite 400
San Antonio, Texas 78205
210/226-1246
92706

SHEET TITLE
EXISTING CONDITIONS AND DEMOLITION PLAN

SHEET NUMBER
C100

PATH: V:\101345\00011\Civil\CAD\134245011DEM.dwg

## LEGEND

| EXISTING | DESCRIPTION |
|---|---|
| | CONTROL POINT |
| | POWER POLE |
| | DOWN GUY |
| | FIRE HYDRANT |
| | WATER VALVE |
| | WATER METER |
| | SIGN |
| | WOOD FENCE |
| —W— | WATER LINE |
| —OE— | OVERHEAD ELECTRIC |
| —678— | CONTOUR |
| 100.0 x | SPOT ELEVATION |
| | TREE TO REMAIN |
| | TREE TO BE REMOVED |
| | EDGE OF WOODS |
| | BIRD HABITAT – DO NOT DISTURB |
| | EDGE OF ASPHALT |
| | WOOD FENCE |
| | EDGE OF TRAIL |
| | LIMITS OF CONSTRUCTION |
| | TXDOT LIMITS OF CONSTRUCTION |
| | PUMP LIMITS OF CONSTRUCTION |

50 0 25 50 100

1" = 50'

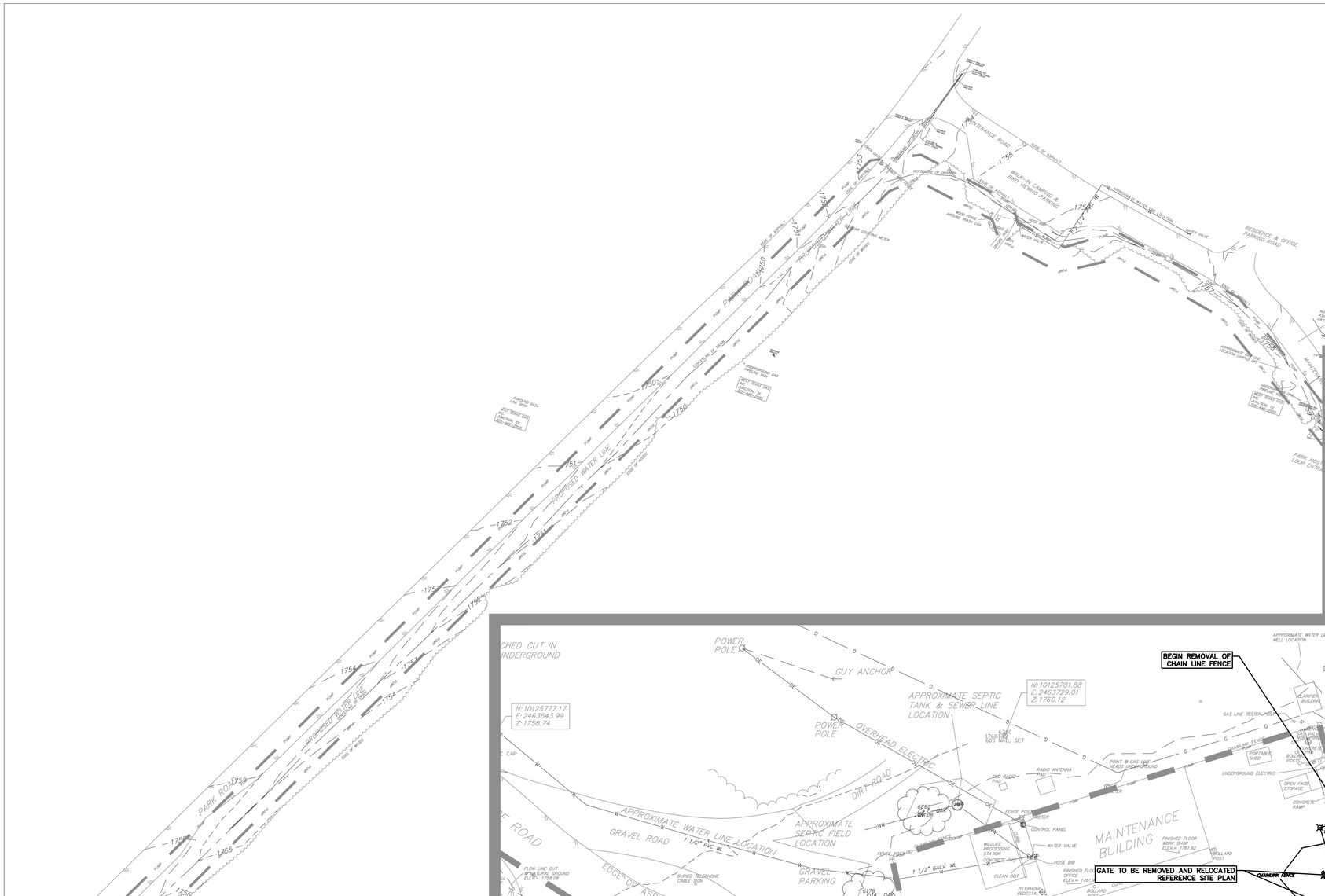


DETAIL A

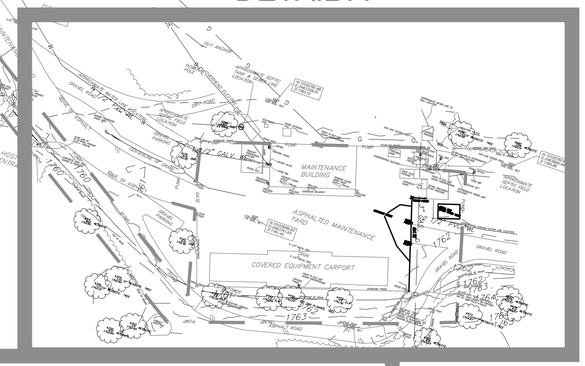


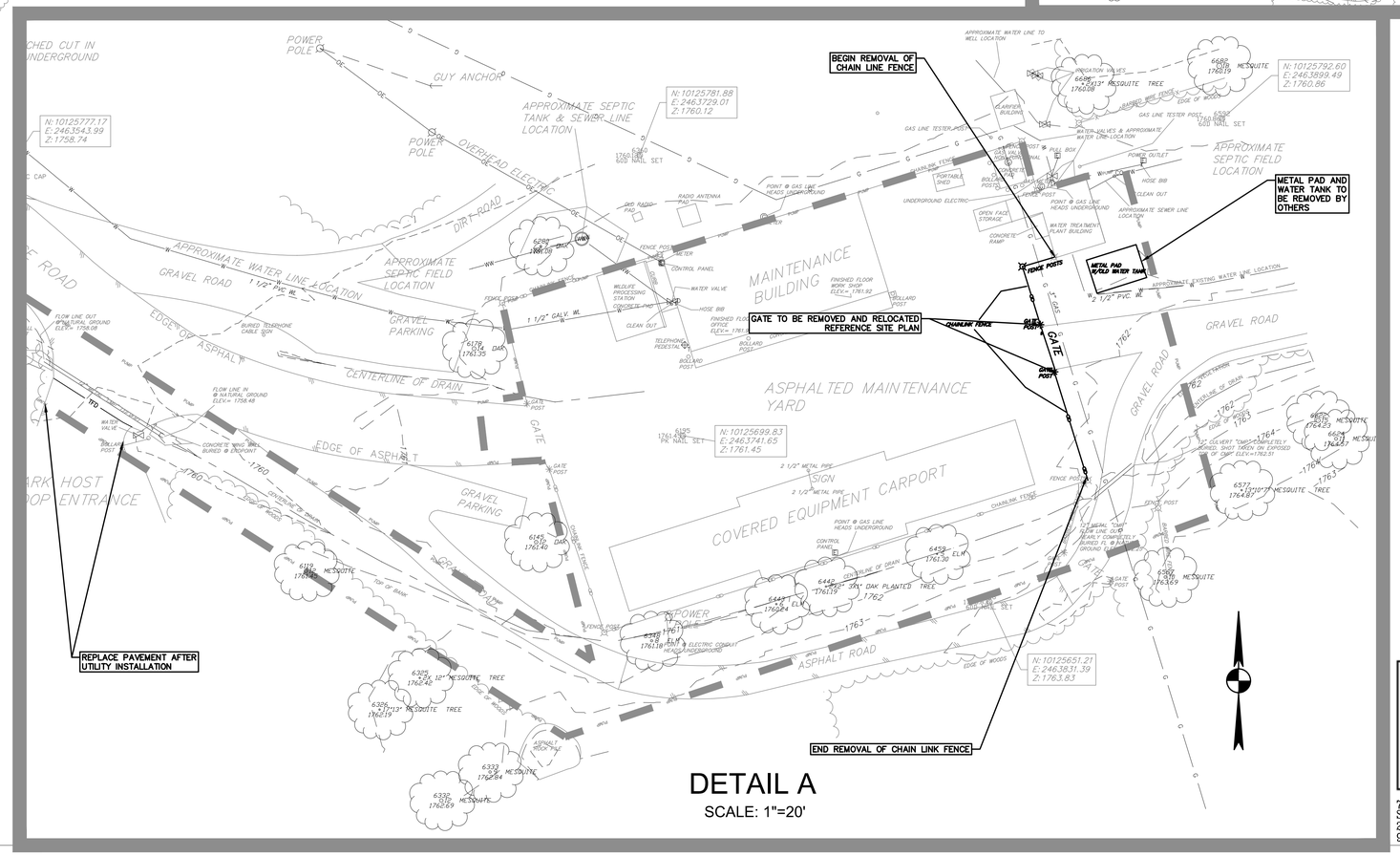


DETAIL A

SCALE: 1"=20'

garza EMC

7708 Rialto Blvd., Suite 125
Austin, Texas 78735
Tel. (512) 298-3284 Fax (512) 298-2592
TBPE # F-14629
Garza EMC, LLC © Copyright 2020

FORD POWELL &CARSON Architects & Planners, Inc.

Architecture
Planning
Preservation
Interior Design

711 Navarro, Suite 400
San Antonio, Texas 78205
210/226-1246
92706

TEXAS PARKS & WILDLIFE

STATE OF TEXAS
CHRIS M. ALLEN
131852
LICENSED
PROFESSIONAL ENGINEER
04/08/2021

# SOUTH LLANO RIVER STATE PARK
## HEADQUARTERS BUILDING RENOVATION AND EXPANSION
PROJECT NUMBER: 134245

DATE: 04.09.2021
DESIGNED BY:
DRAWN BY:
REVIEWED BY:
REVISED:
REVISED:
REVISED:

CONSTRUCTION DOCUMENTS

SHEET TITLE
EXISTING WATER TREATMENT PLANT CONDITIONS AND DEMOLITION PLAN

SHEET NUMBER
C101

PATH: V:\101345\00011\Civil\CAD\PUMP STATION\13425011DEM.dwg

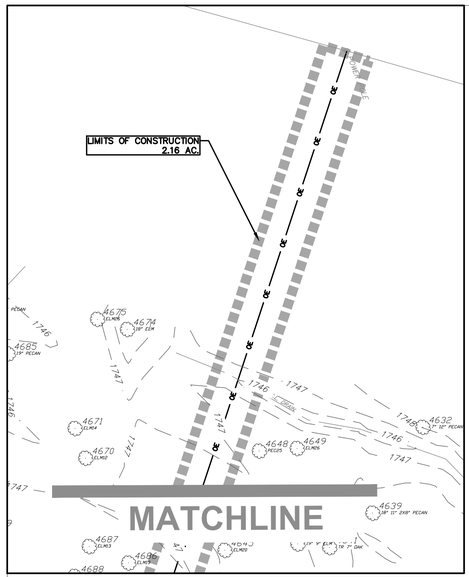


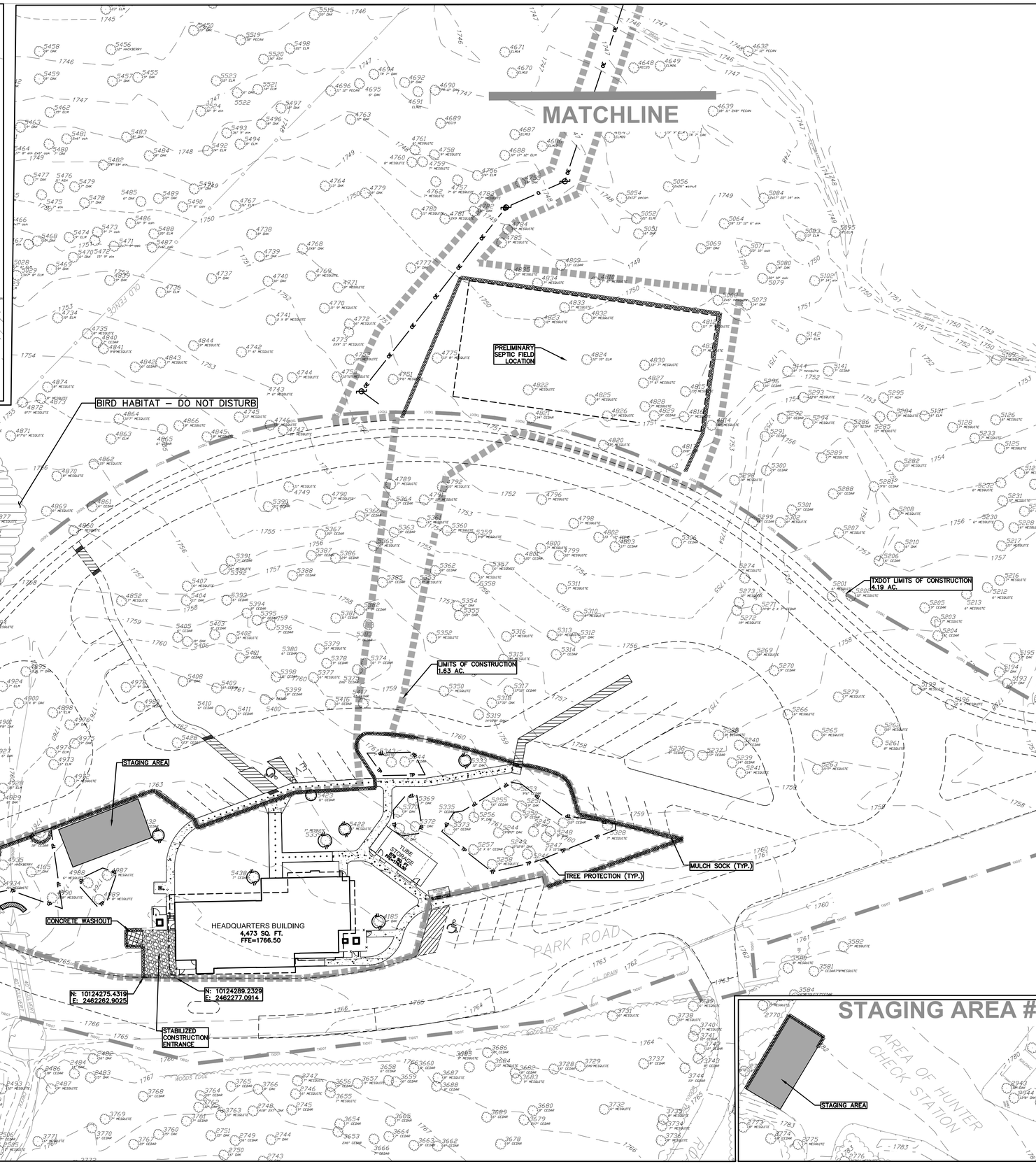


30 0 15 30 60

1" = 30'

## LEGEND

| EXISTING | PROPOSED | DESCRIPTION |
|---|---|---|
| | | CONTROL POINT |
| | | POWER POLE |
| | | DOWN GUY |
| | | FIRE HYDRANT |
| | | WATER VALVE |
| | | WATER METER |
| | | SIGN |
| | | WATER LINE |
| | OE | OVERHEAD ELECTRIC |
| | UE | UNDERGROUND ELECTRIC |
| | | TREE TO REMAIN |
| | | TREE TO BE REMOVED |
| | | EDGE OF WOODS |
| | | EDGE OF ASPHALT |
| | | WOOD FENCE |
| | | EDGE OF TRAIL |
| | | CONCRETE SIDEWALKS |
| | | MULCH SOCK |
| | | LIMITS OF CONSTRUCTION |
| | TXDOT | TXDOT LIMITS OF CONSTRUCTION |
| | PUMP | PUMP LIMITS OF CONSTRUCTION |
| | | TREE PROTECTION |
| | | ROCK BERM |
| | | STAGING AREA |
| 678 | 678 | CONTOUR |
| | | STABILIZED CONSTRUCTION ENTRANCE |
| | | CONSTRUCTION ACCESS |
| | | CONCRETE WASHOUT AREA |

NOTES:

1. REFERENCE SHEET C700 FOR DETAILS.
2. REFERENCE LANDSCAPE PLANS FOR TREE PROTECTION INFORMATION.
3. CONTRACTOR TO COORDINATE SITE ACCESS WITH TPWD AND TXDOT CONSTRUCTION PROJECT.
4. CONTRACTOR IS RESPONSIBLE FOR PREPARING SWPPP REPORT.
5. CONTRACTOR TO LOCATE EXCESS MATERIAL/SPOILS AREA PER DIRECTION FROM TPWD.
6. ALL DISTURBED AREAS OF THIS PROJECT SHALL BE REVEGETATED AND ALL PERMANENT EROSION AND SEDIMENTATION CONTROLS SHALL BE COMPLETED PRIOR TO CONTRACTOR EROSION AND SEDIMENTATION CONTROLS BEING RELEASED FROM SITE. TEMPORARY ESC MEASURES SHALL BE ADJUSTED AS NEEDED TO ENSURE THAT DISTURBED AREAS ARE ADEQUATELY PROTECTED. ADDITIONALLY, ANY AREA WITHIN THE LOC OF THE PROJECT THAT IS NOT ADEQUATELY REVEGETATED SHALL BE BROUGHT INTO COMPLIANCE PRIOR TO THE RELEASE OF THE CONTRACTOR FROM THE PROJECT.
7. TEMPORARY POWER FOR CONSTRUCTION SHALL BE DESIGNED AND COORDINATED BY THE CONTRACTOR AND TPWD.


garza emc
7708 Rialto Blvd., Suite 125
Austin, Texas 78735
Tel. (512) 298-3284 Fax (512) 298-2592
TBPE # F-14629


Garza EMC, LLC © Copyright 2021



FORD POWELL &CARSON
Architects & Planners, Inc.
711 Navarro, Suite 400
San Antonio, Texas 78205
210/226-1246
92706
Architecture
Planning
Preservation
Interior Design


TEXAS PARKS & WILDLIFE

STATE OF TEXAS
CHRIS M. ALLEN
131852
LICENSED
PROFESSIONAL ENGINEER
04/08/2021

# SOUTH LLANO RIVER PARK
## HEADQUARTERS BUILDING RENOVATION AND EXPANSION
PROJECT NUMBER: 134245

DATE: 04.09.2021
DESIGNED BY:
DRAWN BY:
REVIEWED BY:
REVISED:
REVISED:
REVISED:

CONSTRUCTION DOCUMENTS

SHEET TITLE
EROSION AND SEDIMENTATION CONTROL PLAN

SHEET NUMBER
C200

PATH: V:\101345\00011\Civil\CAD\134245011ESC.dwg

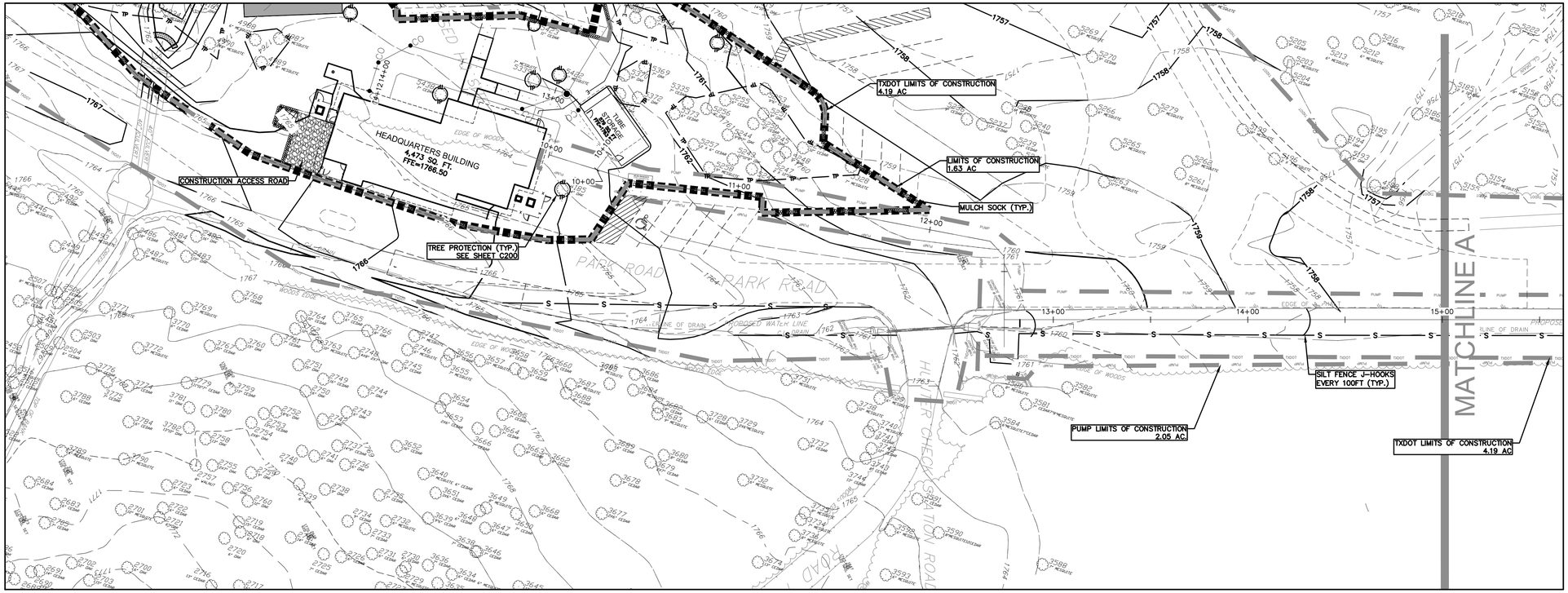


# PLAN A

SCALE: 1"=30'

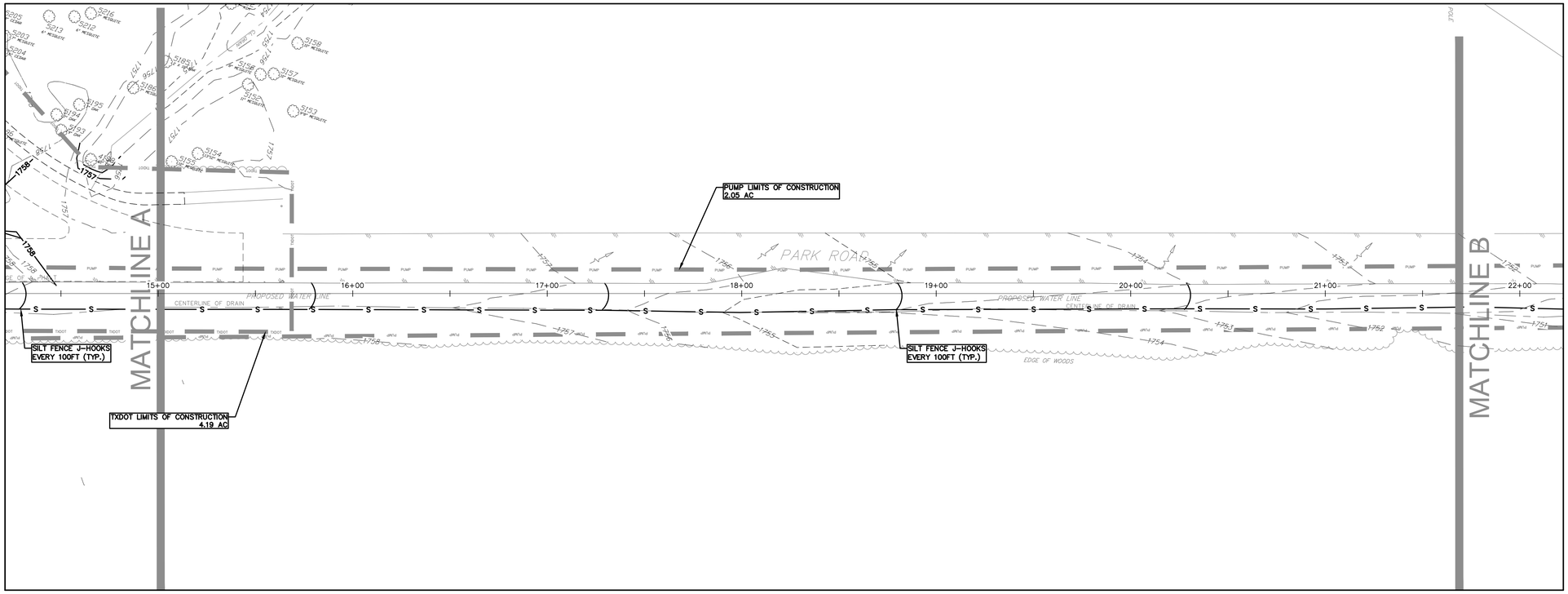


# PLAN B

SCALE: 1"=30'

30 0 15 30 60

1" = 30'

## LEGEND

| EXISTING | PROPOSED | DESCRIPTION |
|---|---|---|
| | | CONTROL POINT |
| | | POWER POLE |
| | | DOWN GUY |
| | | FIRE HYDRANT |
| | | WATER VALVE |
| | | WATER METER |
| | | SIGN |
| | | WATER LINE |
| | OE | OVERHEAD ELECTRIC |
| | UE | UNDERGROUND ELECTRIC |
| | | TREE TO REMAIN |
| | | TREE TO BE REMOVED |
| | | EDGE OF WOODS |
| | | EDGE OF ASPHALT |
| | | WOOD FENCE |
| | | EDGE OF TRAIL |
| | | CONCRETE SIDEWALKS |
| | | MULCH SOCK |
| | | LIMITS OF CONSTRUCTION |
| | TXDOT | TXDOT LIMITS OF CONSTRUCTION |
| | PUMP | PUMP LIMITS OF CONSTRUCTION |
| | | TREE PROTECTION |
| | | ROCK BERM |
| | | STAGING AREA |
| 678 | 678 | CONTOUR |
| | | STABILIZED CONSTRUCTION ENTRANCE |
| | | CONSTRUCTION ACCESS |
| | | CONCRETE WASHOUT AREA |

NOTES:

1. REFERENCE SHEET C700 FOR DETAILS.
2. REFERENCE LANDSCAPE PLANS FOR TREE PROTECTION INFORMATION.
3. CONTRACTOR TO COORDINATE SITE ACCESS WITH TPWD AND TXDOT CONSTRUCTION PROJECT.
4. CONTRACTOR IS RESPONSIBLE FOR PREPARING SWPPP REPORT.
5. CONTRACTOR TO LOCATE EXCESS MATERIAL/SPOILS AREA PER DIRECTION FROM TPWD.
6. ALL DISTURBED AREAS OF THIS PROJECT SHALL BE REVEGETATED AND ALL PERMANENT EROSION AND SEDIMENTATION CONTROLS SHALL BE COMPLETED PRIOR TO CONTRACTOR EROSION AND SEDIMENTATION CONTROLS BEING RELEASED FROM SITE. TEMPORARY ESC MEASURES SHALL BE ADJUSTED AS NEEDED TO ENSURE THAT DISTURBED AREAS ARE ADEQUATELY PROTECTED. ADDITIONALLY, ANY AREA WITHIN THE LOC OF THE PROJECT THAT IS NOT ADEQUATELY REVEGETATED SHALL BE BROUGHT INTO COMPLIANCE PRIOR TO THE RELEASE OF THE CONTRACTOR FROM THE PROJECT.
7. TEMPORARY POWER FOR CONSTRUCTION SHALL BE DESIGNED AND COORDINATED BY THE CONTRACTOR AND TPWD.


garza EMC
7708 Rialto Blvd., Suite 125
Austin, Texas 78735
Tel. (512) 298-3284 Fax (512) 298-2592
TBPE # F-14629

Garza EMC, LLC © Copyright 2021


FORD POWELL &CARSON Architects & Planners, Inc.
Architecture
Planning
Preservation
Interior Design
711 Navarro, Suite 400
San Antonio, Texas 78205
210/226-1246
92706


TEXAS PARKS & WILDLIFE

STATE OF TEXAS
CHRIS M. ALLEN
131852
LICENSED PROFESSIONAL ENGINEER
04/08/2021

# SOUTH LLANO RIVER STATE PARK
## HEADQUARTERS BUILDING RENOVATION AND EXPANSION
PROJECT NUMBER: 134245

CONSTRUCTION DOCUMENTS

DATE: 04.09.2021
DESIGNED BY:
DRAWN BY:
REVIEWED BY:
REVISED:
REVISED:
REVISED:

SHEET TITLE
EROSION AND SEDIMENTATION CONTROL PLAN 2

SHEET NUMBER
C201

PATH: V:\101345\00011\Civil\CAD\101345011ES-01.dwg

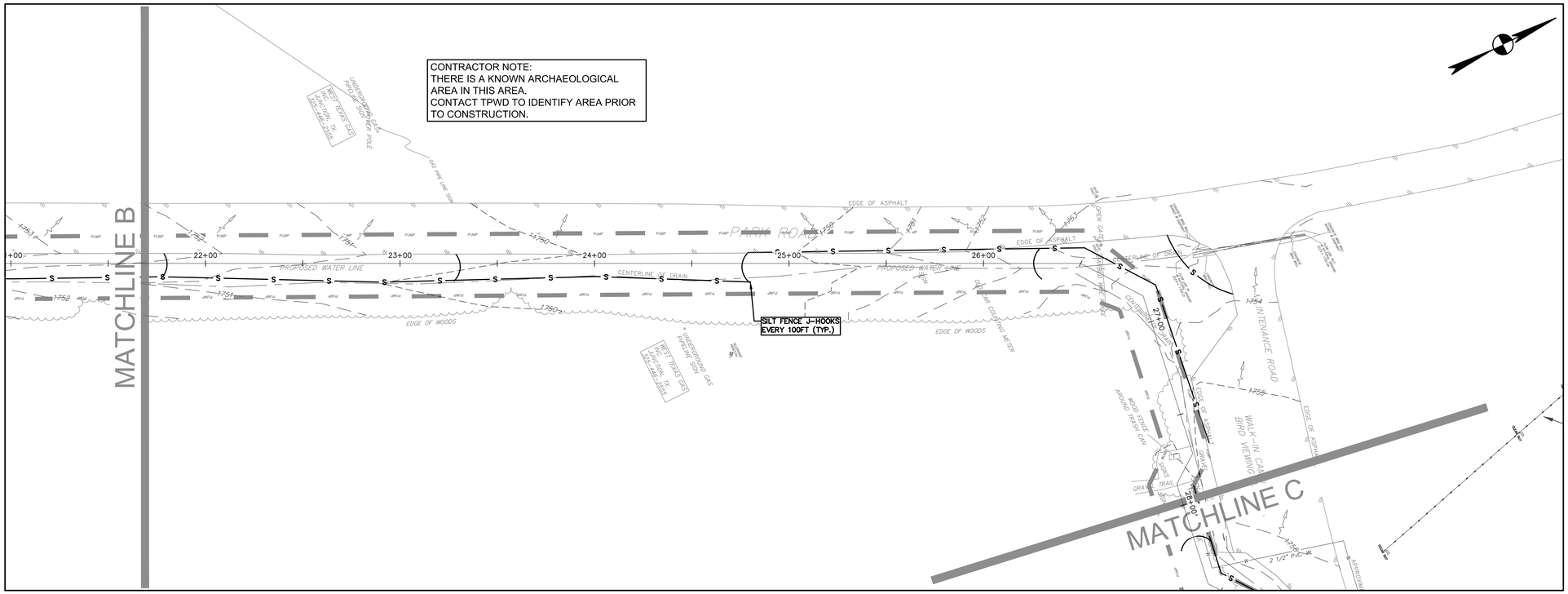


# PLAN C

SCALE: 1"=30'

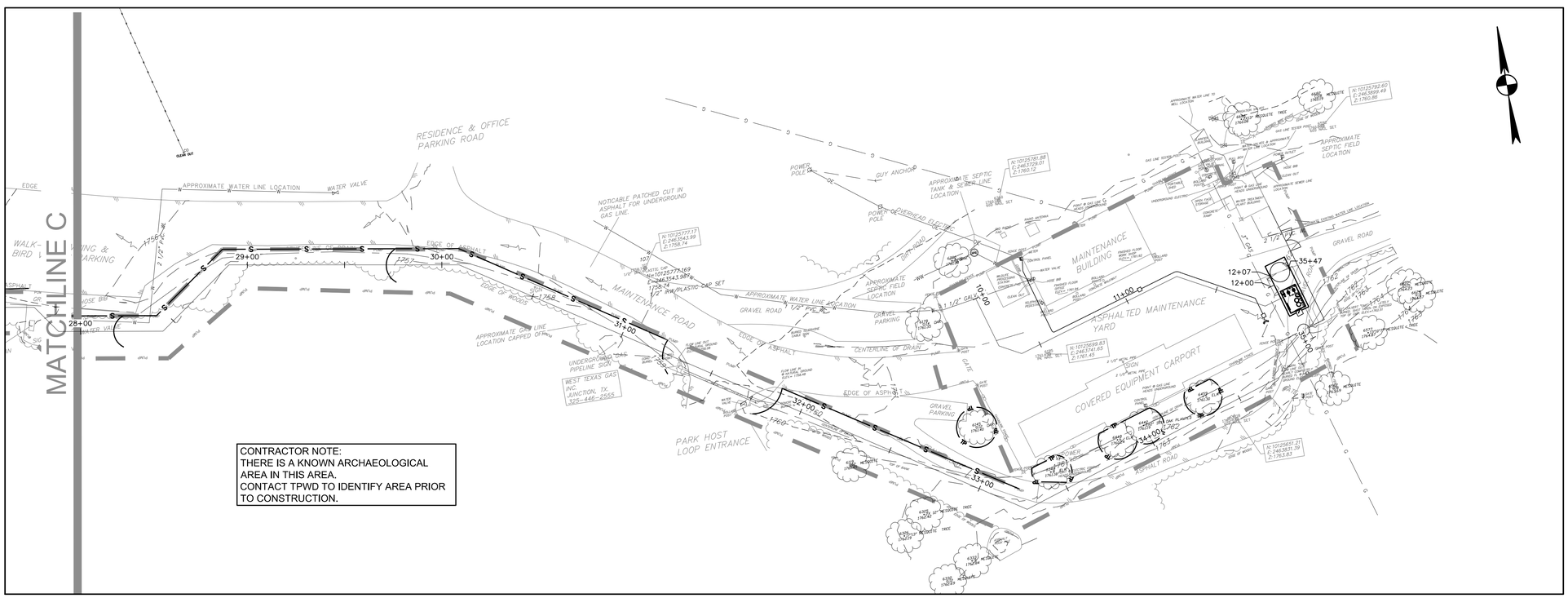


# PLAN D

SCALE: 1"=30'

30 0 15 30 60

1" = 30'

## LEGEND

| EXISTING | PROPOSED | DESCRIPTION |
|---|---|---|
| | | CONTROL POINT |
| | | POWER POLE |
| | | DOWN GUY |
| | | FIRE HYDRANT |
| | | WATER VALVE |
| | | WATER METER |
| | | SIGN |
| | | WATER LINE |
| | OE | OVERHEAD ELECTRIC |
| | UE | UNDERGROUND ELECTRIC |
| | | TREE TO REMAIN |
| | | TREE TO BE REMOVED |
| | | EDGE OF WOODS |
| | | EDGE OF ASPHALT |
| | | WOOD FENCE |
| | | EDGE OF TRAIL |
| | | CONCRETE SIDEWALKS |
| | | MULCH SOCK |
| | | LIMITS OF CONSTRUCTION |
| | TXDOT | TXDOT LIMITS OF CONSTRUCTION |
| | PUMP | PUMP LIMITS OF CONSTRUCTION |
| | | TREE PROTECTION |
| | | ROCK BERM |
| | | STAGING AREA |
| 678 | 678 | CONTOUR |
| | | STABILIZED CONSTRUCTION ENTRANCE |
| | | CONSTRUCTION ACCESS |
| | | CONCRETE WASHOUT AREA |

NOTES:

1. REFERENCE SHEET C700 FOR DETAILS.
2. REFERENCE LANDSCAPE PLANS FOR TREE PROTECTION INFORMATION.
3. CONTRACTOR TO COORDINATE SITE ACCESS WITH TPWD AND TXDOT CONSTRUCTION PROJECT.
4. CONTRACTOR IS RESPONSIBLE FOR PREPARING SWPPP REPORT.
5. CONTRACTOR TO LOCATE EXCESS MATERIAL/SPOILS AREA PER DIRECTION FROM TPWD.
6. ALL DISTURBED AREAS OF THIS PROJECT SHALL BE REVEGETATED AND ALL PERMANENT EROSION AND SEDIMENTATION CONTROLS SHALL BE COMPLETED PRIOR TO CONTRACTOR EROSION AND SEDIMENTATION CONTROLS BEING RELEASED FROM SITE. TEMPORARY ESC MEASURES SHALL BE ADJUSTED AS NEEDED TO ENSURE THAT DISTURBED AREAS ARE ADEQUATELY PROTECTED. ADDITIONALLY, ANY AREA WITHIN THE LOC OF THE PROJECT THAT IS NOT ADEQUATELY REVEGETATED SHALL BE BROUGHT INTO COMPLIANCE PRIOR TO THE RELEASE OF THE CONTRACTOR FROM THE PROJECT.
7. TEMPORARY POWER FOR CONSTRUCTION SHALL BE DESIGNED AND COORDINATED BY THE CONTRACTOR AND TPWD.


garza EMC
7708 Rialto Blvd., Suite 125
Austin, Texas 78735
Tel. (512) 298-3284 Fax (512) 298-2592
TBPE # F-14629

Garza EMC, LLC © Copyright 2021


FORD POWELL &CARSON
Architects & Planners, Inc.
Architecture
Planning
Preservation
Interior Design
711 Navarro, Suite 400
San Antonio, Texas 78205
210/226-1246
92706


TEXAS PARKS & WILDLIFE

STATE OF TEXAS
CHRIS M. ALLEN
131852
LICENSED
PROFESSIONAL ENGINEER
04/08/2021

# SOUTH LLANO RIVER STATE PARK
## HEADQUARTERS BUILDING RENOVATION AND EXPANSION
PROJECT NUMBER: 134245

DATE: 04.09.2021
DESIGNED BY:
DRAWN BY:
REVIEWED BY:
REVISED:
REVISED:
REVISED:

CONSTRUCTION DOCUMENTS

SHEET TITLE
EROSION AND SEDIMENTATION CONTROL PLAN 3

SHEET NUMBER
C202

PATH: V:\101345\D0011\Civil\CAD\101345011ES-02.dwg

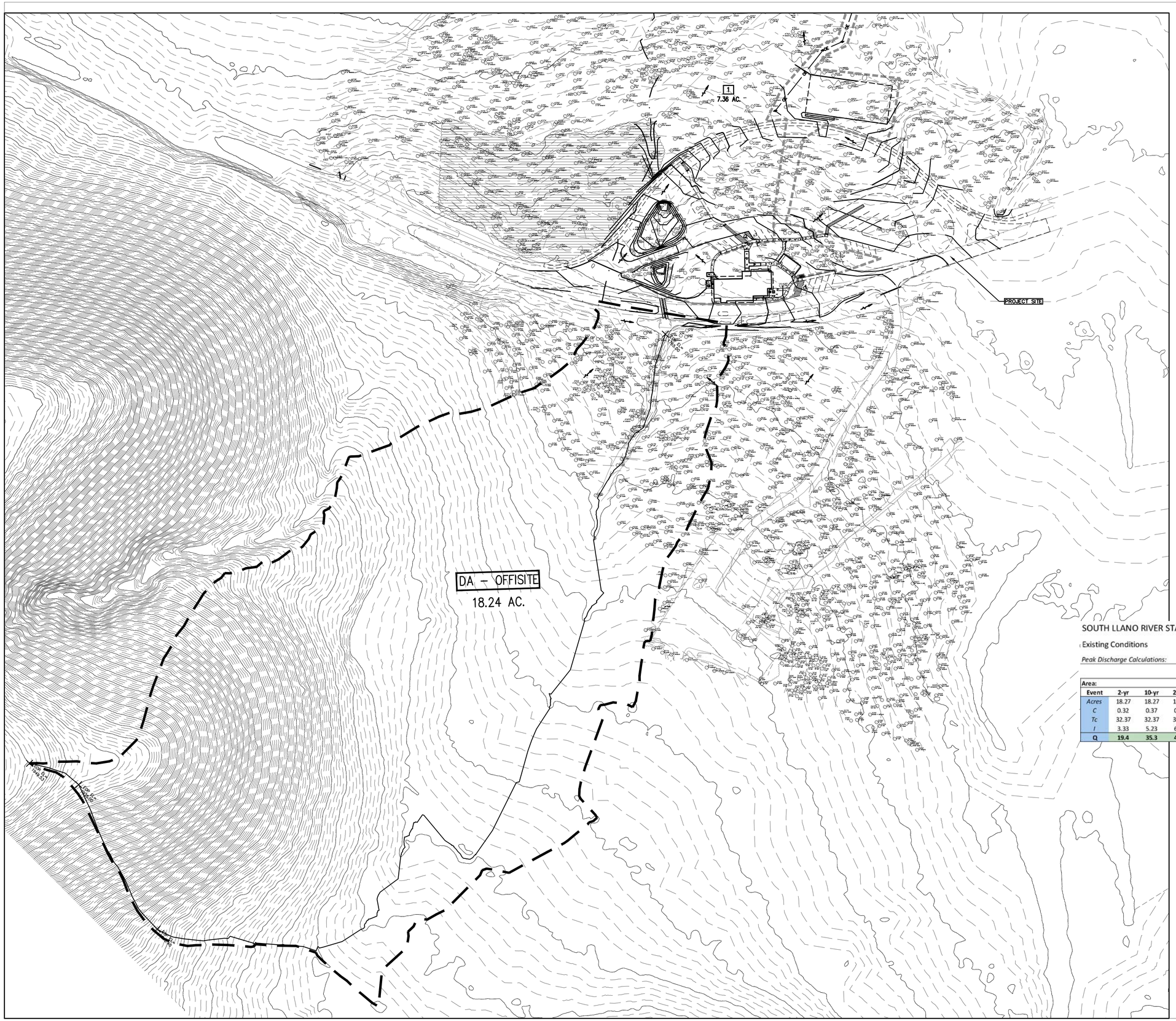


80 0 40 80 160
1" = 80'

## LEGEND

| EXISTING | PROPOSED | DESCRIPTION |
|---|---|---|
| | | POWER POLE |
| | | DOWN GUY |
| | | FIRE HYDRANT |
| | | WATER VALVE |
| | | WATER METER |
| | | SIGN |
| | | WATER LINE |
| OE | OE | OVERHEAD ELECTRIC |
| | UE | UNDERGROUND ELECTRIC |
| | | EDGE OF WOODS |
| | | EDGE OF ASPHALT |
| | | WOOD FENCE |
| | | EDGE OF TRAIL |
| | | CONCRETE SIDEWALKS |
| 678 | 678 | CONTOUR |
| | | DIRECTION OF FLOW |
| | E1 1.03 AC. | DRAINAGE AREA NUMBER AND ACREAGE |
| | | DRAINAGE DIVIDE |
| | | DRAINAGE CENTERLINE |
| | | LIMITS OF CONSTRUCTION |

**NOTES:**
1. CONSTRUCTION OF PROPOSED TRAIL SHALL NOT OCCUR PRIOR TO COMPLETION OF TXDOT ROAD AND PARKING LOT PROJECT (OR AT LEASE ROUGH GRADED).

SOUTH LLANO RIVER STATE PARK

Existing Conditions

*Peak Discharge Calculations:*

| Area: | DA - OFFSITE | | | | | | | | |
|---|---|---|---|---|---|---|---|---|---|
| Event | 2-yr | 10-yr | 25-yr | 100-yr | 500-yr | Surface | Acres | SF | % |
| *Acres* | 18.27 | 18.27 | 18.27 | 18.27 | 18.27 | *Asphalt* | 0.39 | 16,988 | 2.13 |
| *C* | 0.32 | 0.37 | 0.41 | 0.48 | 0.57 | *Forest/Woodlands, 2-7%* | 17.88 | 778,853 | 97.87 |
| *Tc* | 32.37 | 32.37 | 32.37 | 32.37 | 32.37 | | | | |
| *I* | 3.33 | 5.23 | 6.56 | 8.88 | 12.20 | | | | |
| **Q** | **19.4** | **35.3** | **49.1** | **77.9** | **126.9** | **Total** | **18.27** | **795,841** | **100** |

garza EMC
7708 Rialto Blvd., Suite 125
Austin, Texas 78735
Tel. (512) 298-3284 Fax (512) 298-2592
TBPE # F-14629
Garza EMC, LLC © Copyright 2021

FORD POWELL &CARSON
Architects & Planners, Inc.
Architecture
Planning
Preservation
Interior Design
711 Navarro, Suite 400
San Antonio, Texas 78205
210/226-1246
92706

TEXAS PARKS & WILDLIFE

STATE OF TEXAS
CHRIS M. ALLEN
131852
LICENSED
PROFESSIONAL ENGINEER
04/08/2021

# SOUTH LLANO RIVER STATE PARK
## HEADQUARTERS BUILDING RENOVATION AND EXPANSION
PROJECT NUMBER: 134245

DATE: 04.09.2021
DESIGNED BY:
DRAWN BY:
REVIEWED BY:
REVISED:
REVISED:
REVISED:

CONSTRUCTION DOCUMENTS

**SHEET TITLE**
OFFISTE DRAINAGE AREA MAP

SHEET NUMBER
C300

PATH: V:\101345\00011\Civil\CAD\134245011DAM01.dwg

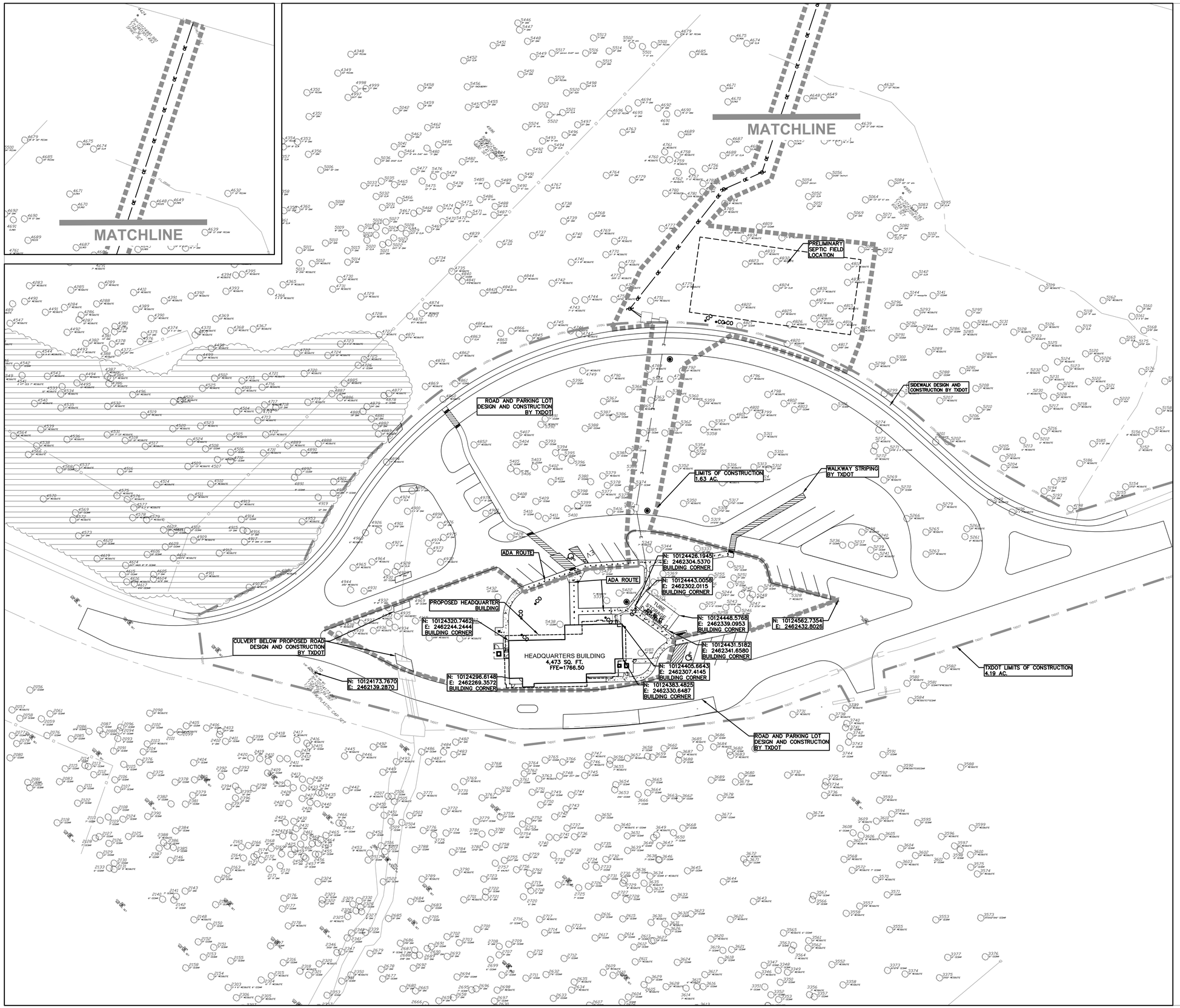


40 0 20 40 80

1" = 40'

## LEGEND

| EXISTING | PROPOSED | DESCRIPTION |
|---|---|---|
| | | PROPERTY LINE/ (R.O.W.) LINE |
| | | RECORD INFORMATION |
| | | CONTROL POINT |
| | | LIGHT POLE |
| | | GROUND LIGHT |
| | | POWER POLE |
| | | DOWN GUY |
| TMH | | TELEPHONE MANHOLE |
| WTRMH | | WATER MANHOLE |
| CMKR | | WATER LINE MARKER |
| CMKR | | UNDERGROUND CABLE MARKER |
| GMKR | | UNDERGROUND GAS LINE MARKER |
| UGTM | | UNDERGROUND TELEPHONE MARKER |
| GRSR | | GAS RISER |
| TRSR | | TELEPHONE RISER |
| SPC | | SPRINKLER CONTROL BOX |
| | SW | SWITCH GEAR & PAD |
| | T | TRANSFORMER (SIZE VARIES) |
| | | FIRE HYDRANT |
| | | WATER VALVE |
| | | WATER METER |
| | | WATER METER VAULT (SIZE VARIES) |
| | | CABLE TV RISER |
| | | ELECTRIC BOX |
| | | ELECTRIC METER |
| | | GAS METER |
| | | GAS VALVE |
| TCB | TCB | TRAFFIC CONTROL BOX |
| TSP | | TRAFFIC SIGNAL POST |
| | | GRATE INLET |
| | | CURB INLET (SIZE VARIES) |
| | | GREASE TRAP (SIZE VARIES) |
| OE | OE | OVERHEAD ELECTRIC |
| EMH | | ELECTRIC MANHOLE (SIZE VARIES) |
| WWMH | | WASTEWATER MANHOLE (SIZE VARIES) |
| SSMH | | STORMSEWER MANHOLE (SIZE VARIES) |
| TMH | TMH | TELEPHONE MANHOLE (SIZE VARIES) |
| CO | CO | WASTEWATER CLEANOUT |
| | | WIRE FENCE |
| | | WOOD FENCE |
| | | CHAIN LINK FENCE |
| | D | DUMPSTER |
| | | CURB & GUTTER |
| | | EDGE OF PAVEMENT |
| | | FIRE LANE DESIGNATION |
| | | HANDICAP ACCESS ROUTE |
| | | CONCRETE SIDEWALKS |
| | | DECOMPOSED GRANITE TRAIL |
| | | WALL |
| | | SIGN |
| | | WHEELSTOP |
| | | BOLLARD |
| | FFE | FINISH FLOOR ELEVATION |
| | R 9.0' | PARKING COUNT (REGULAR SPACES) |
| | HC 9.0' | PARKING COUNT (HANDICAP SPACES) |
| | P 9.0' | PARKING COUNT (PARALLEL SPACES) |
| | | HANDICAP SPACE |
| | | BIKE PARKING |
| | | BARRICADE |
| | | LIMITS OF CONSTRUCTION |
| TXDOT | | TXDOT LIMITS OF CONSTRUCTION |

TEXAS PARKS & WILDLIFE

STATE OF TEXAS
CHRIS M. ALLEN
131852
LICENSED
PROFESSIONAL ENGINEER
04/08/2021

# SOUTH LLANO RIVER STATE PARK
## HEADQUARTERS BUILDING RENOVATION AND EXPANSION
PROJECT NUMBER: 134245

DATE: 04.09.2021
DESIGNED BY:
DRAWN BY:
REVIEWED BY:
REVISED:
REVISED:
REVISED:

CONSTRUCTION DOCUMENTS

garza EMC
7708 Rialto Blvd., Suite 125
Austin, Texas 78735
Tel. (512) 298-3284 Fax (512) 298-2592
TBPE # F-14629
Garza EMC, LLC © Copyright 2021

FORD POWELL & CARSON
Architects & Planners, Inc.
Architecture
Planning
Preservation
Interior Design
711 Navarro, Suite 400
San Antonio, Texas 78205
210/226-1246
92706

SHEET TITLE
OVERALL SITE PLAN

SHEET NUMBER
C400

PATH: W:\101345\00011\Civil\CAD\134245011SPN.dwg

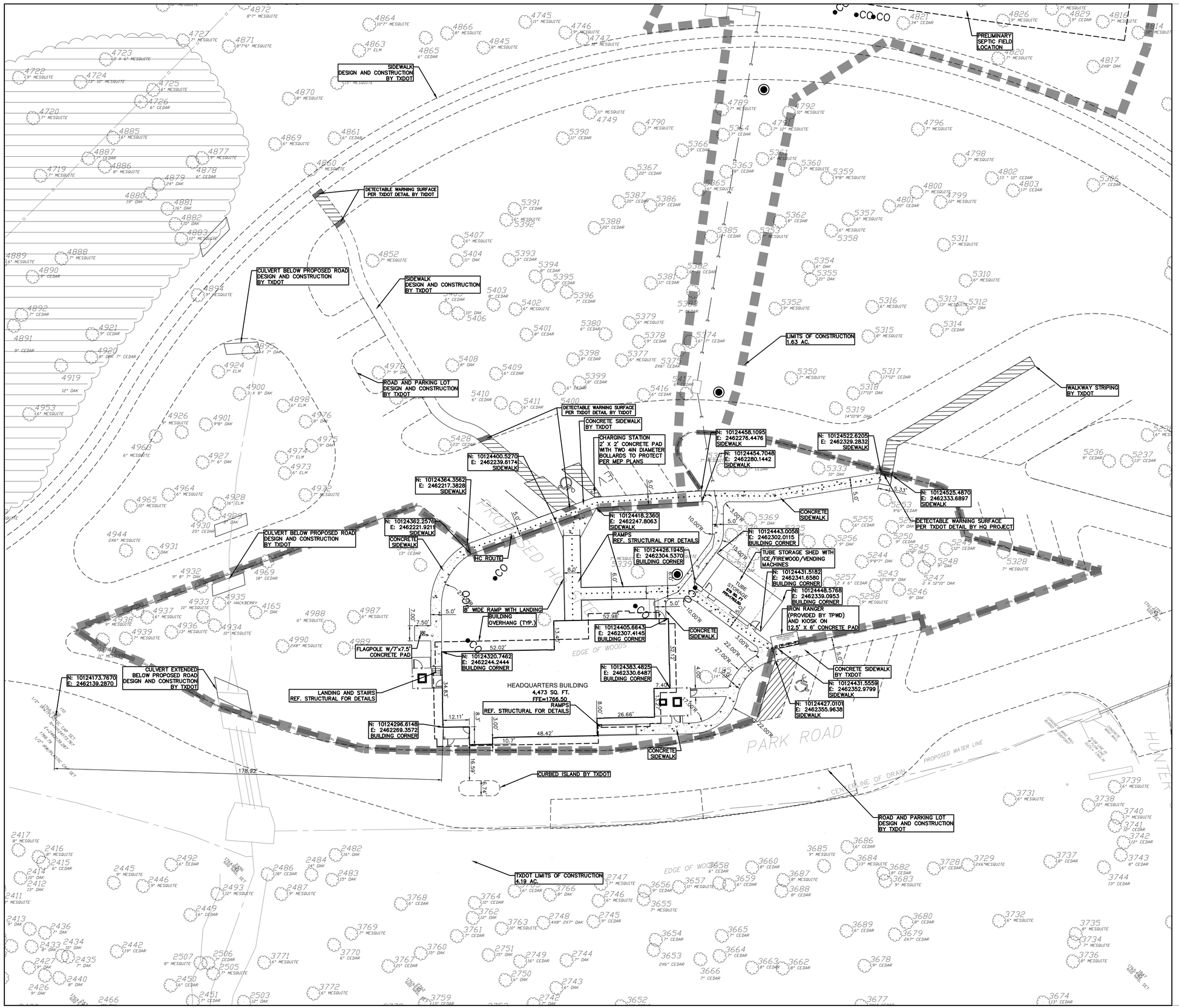


20 0 10 20 40

1" = 20'

## LEGEND

| EXISTING | PROPOSED | DESCRIPTION |
|---|---|---|
| | | PROPERTY LINE/ (R.O.W.) LINE |
| (XXX) | | RECORD INFORMATION |
| | | CONTROL POINT |
| | | LIGHT POLE |
| GL | | GROUND LIGHT |
| | | POWER POLE |
| | | DOWN GUY |
| TMH | | TELEPHONE MANHOLE |
| WTRMH | | WATER MANHOLE |
| | | WATER LINE MARKER |
| CMKR | | UNDERGROUND CABLE MARKER |
| GMKR | | UNDERGROUND GAS LINE MARKER |
| UGTM | | UNDERGROUND TELEPHONE MARKER |
| GRSR | | GAS RISER |
| TRSR | | TELEPHONE RISER |
| SPCB | | SPRINKLER CONTROL BOX |
| | | SWITCH GEAR & PAD |
| | T | TRANSFORMER (SIZE VARIES) |
| | | FIRE HYDRANT |
| | | WATER VALVE |
| | | WATER METER |
| | | WATER METER VAULT (SIZE VARIES) |
| | | CABLE TV RISER |
| | | ELECTRIC BOX |
| | | ELECTRIC METER |
| | | GAS METER |
| | | GAS VALVE |
| TCB | | TRAFFIC CONTROL BOX |
| TSP | | TRAFFIC SIGNAL POST |
| | | GRATE INLET |
| | | CURB INLET (SIZE VARIES) |
| | | GREASE TRAP (SIZE VARIES) |
| OE | OE | OVERHEAD ELECTRIC |
| EMH | | ELECTRIC MANHOLE (SIZE VARIES) |
| WWMH | | WASTEWATER MANHOLE (SIZE VARIES) |
| SSMH | | STORMSEWER MANHOLE (SIZE VARIES) |
| TMH | TMH | TELEPHONE MANHOLE (SIZE VARIES) |
| CO | CO | WASTEWATER CLEANOUT |
| | | WIRE FENCE |
| | | WOOD FENCE |
| | | CHAIN LINK FENCE |
| | D | DUMPSTER |
| | | CURB & GUTTER |
| | | EDGE OF PAVEMENT |
| | | FIRE LANE DESIGNATION |
| | | HANDICAP ACCESS ROUTE |
| | | CONCRETE SIDEWALKS |
| | | DECOMPOSED GRANITE TRAIL |
| | | WALL |
| | | SIGN |
| | | WHEELSTOP |
| | | BOLLARD |
| | FFE | FINISH FLOOR ELEVATION |
| | R 9.0' | PARKING COUNT (REGULAR SPACES) |
| | HC 9.0' | PARKING COUNT (HANDICAP SPACES) |
| | P 9.0' | PARKING COUNT (PARALLEL SPACES) |
| | | HANDICAP SPACE |
| | BIKE PARKING | BIKE PARKING |
| | | BARRICADE |

**SITE NOTES:**

1. CONTRACTOR IS RESPONSIBLE FOR VERIFYING LOCATION OF ALL EXISTING UTILITIES PRIOR TO CONSTRUCTION.
2. REFER TO ARCHITECTURAL PLANS FOR ACTUAL BUILDING DIMENSIONS. REFER TO ARCHITECTURAL DETAILS AND SPECIFICATIONS FOR REQUIREMENTS OF CONSTRUCTION AND JOINT SPACING OF SIDEWALKS ADJACENT TO BUILDING, SUBGRADE PREPARATION, AND CONSTRUCTION OF PAVEMENT AND EMBANKMENTS.
3. WALKWAY STRIPING IN PARKING LOT IS PART OF PATH FOR ACCESSIBLE EGRESS. STRIPING IN TXDOT SCOPE.
4. REFERENCE LANDSCAPE PLAN FOR HARDSCAPE JOINTS.

**ACCESSIBILITY NOTES:**

1. 2012 TEXAS ACCESSIBILITY STANDARDS, OR LATEST EDITION.
2. SLOPES ON ACCESSIBLE ROUTES MAY NOT EXCEED 1:20 UNLESS DESIGNED AS A RAMP. [TAS 403.3]
3. THE MAXIMUM SLOPE OF A RAMP IN NEW CONSTRUCTION IS 1:12. [405.2]
4. THE MAXIMUM RISE FOR ANY RAMP RUN IS 30 IN. [TAS 405.6]
3. ACCESSIBLE ROUTES MUST HAVE A CROSS-SLOPE NO GREATER THAN 1:48. [TAS 403.3]
4. GROUND SURFACES ALONG ACCESSIBLE ROUTES MUST BE STABLE, FIRM, AND SLIP RESISTANT. [TAS 302.1]

**LIGHTING NOTE:**

1. REFERENCE SITE LIGHTING PLAN (ELECTRICAL DRAWINGS) FOR ALL PROPOSED SITE LIGHTING LOCATIONS AND DETAILS.

garza EMC
7708 Rialto Blvd., Suite 125
Austin, Texas 78735
Tel. (512) 298-3284 Fax (512) 298-2592
TBPE # F-14629
Garza EMC, LLC © Copyright 2021

FORD POWELL &CARSON
Architects & Planners, Inc.
711 Navarro, Suite 400
San Antonio, Texas 78205
210/226-1246
92706

Architecture
Planning
Preservation
Interior Design

TEXAS PARKS & WILDLIFE

STATE OF TEXAS
CHRIS M. ALLEN
131852
LICENSED
PROFESSIONAL ENGINEER
04/08/2021

# SOUTH LLANO RIVER STATE PARK
## HEADQUARTERS BUILDING RENOVATION AND EXPANSION
PROJECT NUMBER: 134245

DATE: 04.09.2021
DESIGNED BY:
DRAWN BY:
REVIEWED BY:
REVISED:
REVISED:
REVISED:

CONSTRUCTION DOCUMENTS

SHEET TITLE
SITE PLAN

SHEET NUMBER
C401

PATH: V:\101345\00011\Civil\CAD\134245011SPN02.dwg

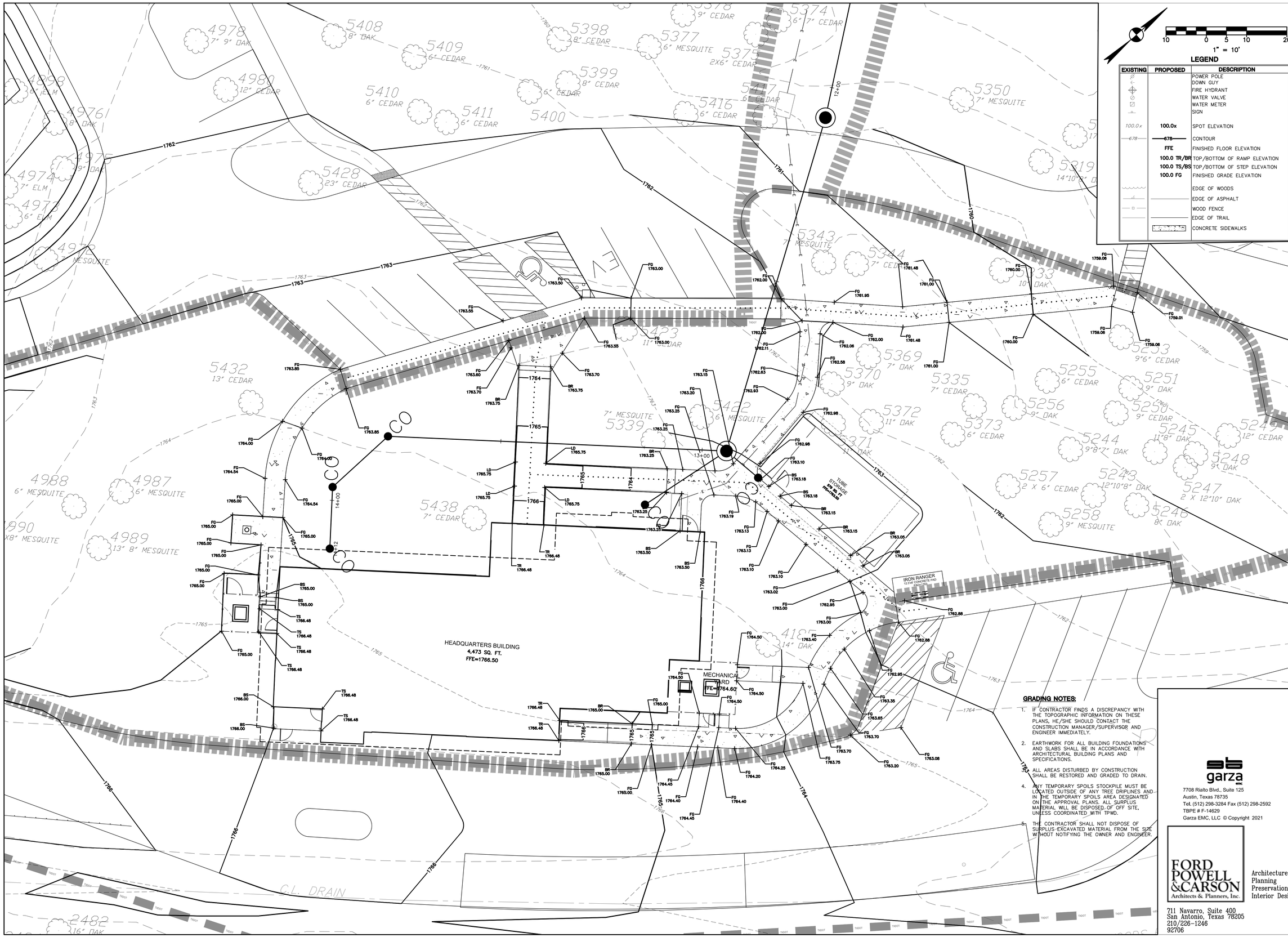


## LEGEND

| EXISTING | PROPOSED | DESCRIPTION |
|---|---|---|
| | | POWER POLE |
| | | DOWN GUY |
| | | FIRE HYDRANT |
| | | WATER VALVE |
| | | WATER METER |
| | | SIGN |
| 100.0x | 100.0x | SPOT ELEVATION |
| 678 | 678 | CONTOUR |
| | FFE | FINISHED FLOOR ELEVATION |
| | 100.0 TR/BR | TOP/BOTTOM OF RAMP ELEVATION |
| | 100.0 TS/BS | TOP/BOTTOM OF STEP ELEVATION |
| | 100.0 FG | FINISHED GRADE ELEVATION |
| | | EDGE OF WOODS |
| | | EDGE OF ASPHALT |
| | | WOOD FENCE |
| | | EDGE OF TRAIL |
| | | CONCRETE SIDEWALKS |

**GRADING NOTES:**

1. IF CONTRACTOR FINDS A DISCREPANCY WITH THE TOPOGRAPHIC INFORMATION ON THESE PLANS, HE/SHE SHOULD CONTACT THE CONSTRUCTION MANAGER/SUPERVISOR AND ENGINEER IMMEDIATELY.
2. EARTHWORK FOR ALL BUILDING FOUNDATIONS AND SLABS SHALL BE IN ACCORDANCE WITH ARCHITECTURAL BUILDING PLANS AND SPECIFICATIONS.
3. ALL AREAS DISTURBED BY CONSTRUCTION SHALL BE RESTORED AND GRADED TO DRAIN.
4. ANY TEMPORARY SPOILS STOCKPILE MUST BE LOCATED OUTSIDE OF ANY TREE DRIPLINES AND IN THE TEMPORARY SPOILS AREA DESIGNATED ON THE APPROVAL PLANS. ALL SURPLUS MATERIAL WILL BE DISPOSED OF OFF SITE, UNLESS COORDINATED WITH TPWD.
5. THE CONTRACTOR SHALL NOT DISPOSE OF SURPLUS EXCAVATED MATERIAL FROM THE SITE WITHOUT NOTIFYING THE OWNER AND ENGINEER.

garza EMC
7708 Rialto Blvd., Suite 125
Austin, Texas 78735
Tel. (512) 298-3284 Fax (512) 298-2592
TBPE # F-14629
Garza EMC, LLC © Copyright 2021

FORD POWELL &CARSON
Architects & Planners, Inc.
Architecture
Planning
Preservation
Interior Design
711 Navarro, Suite 400
San Antonio, Texas 78205
210/226-1246
92706

TEXAS PARKS & WILDLIFE

CHRIS M. ALLEN
STATE OF TEXAS
131852
LICENSED
PROFESSIONAL ENGINEER
04/08/2021

# SOUTH LLANO RIVER STATE PARK
## HEADQUARTERS BUILDING RENOVATION AND EXPANSION
PROJECT NUMBER: 134245

DATE: 04.09.2021
DESIGNED BY:
DRAWN BY:
REVIEWED BY:
REVISED:
REVISED:
REVISED:

CONSTRUCTION DOCUMENTS

SHEET TITLE
GRADING PLAN

SHEET NUMBER
C500

PATH: V:\101345\00011\civil\CAD\134245011GRP.dwg

SEE MATCHLINE THIS SHEET

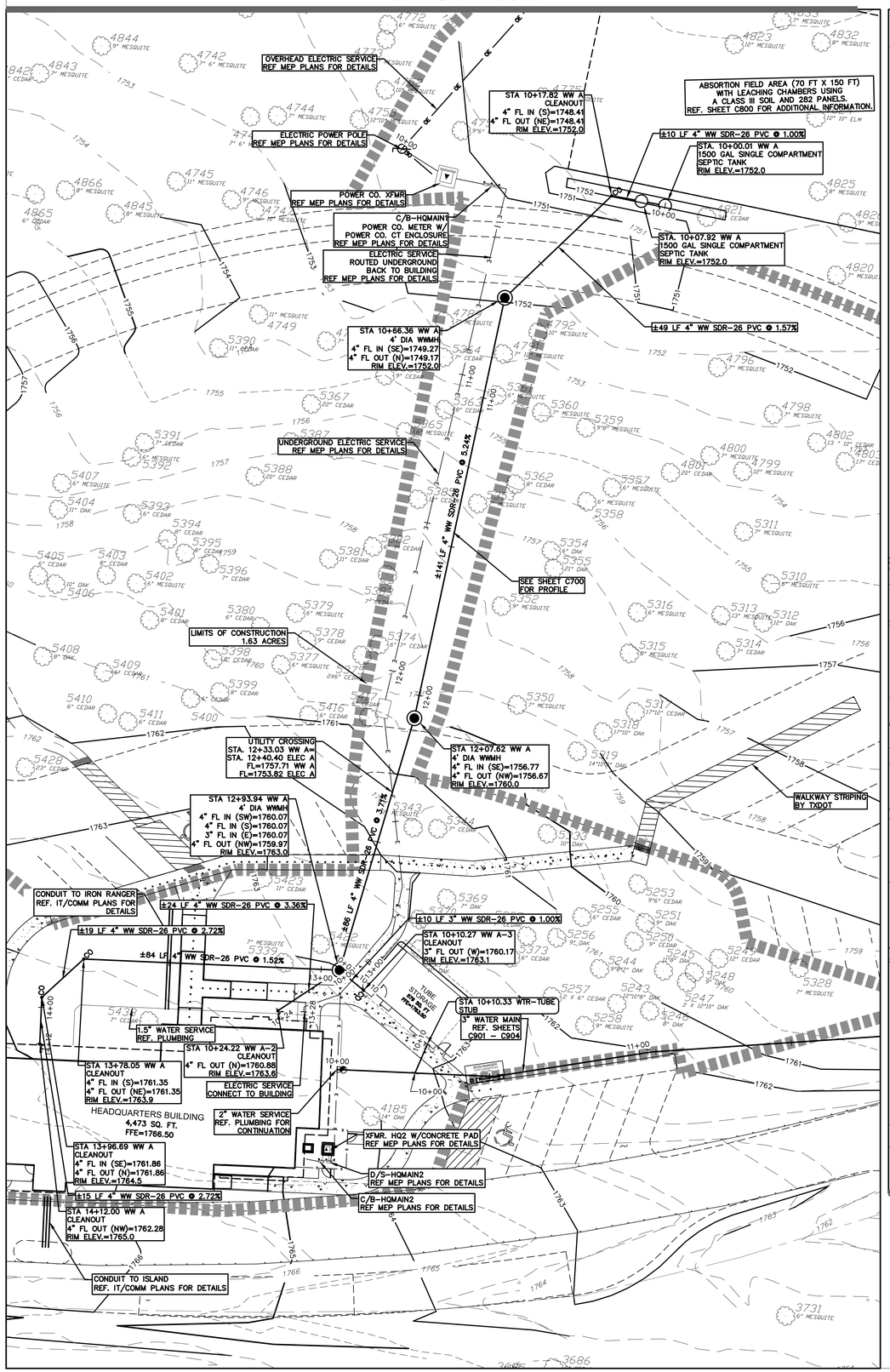


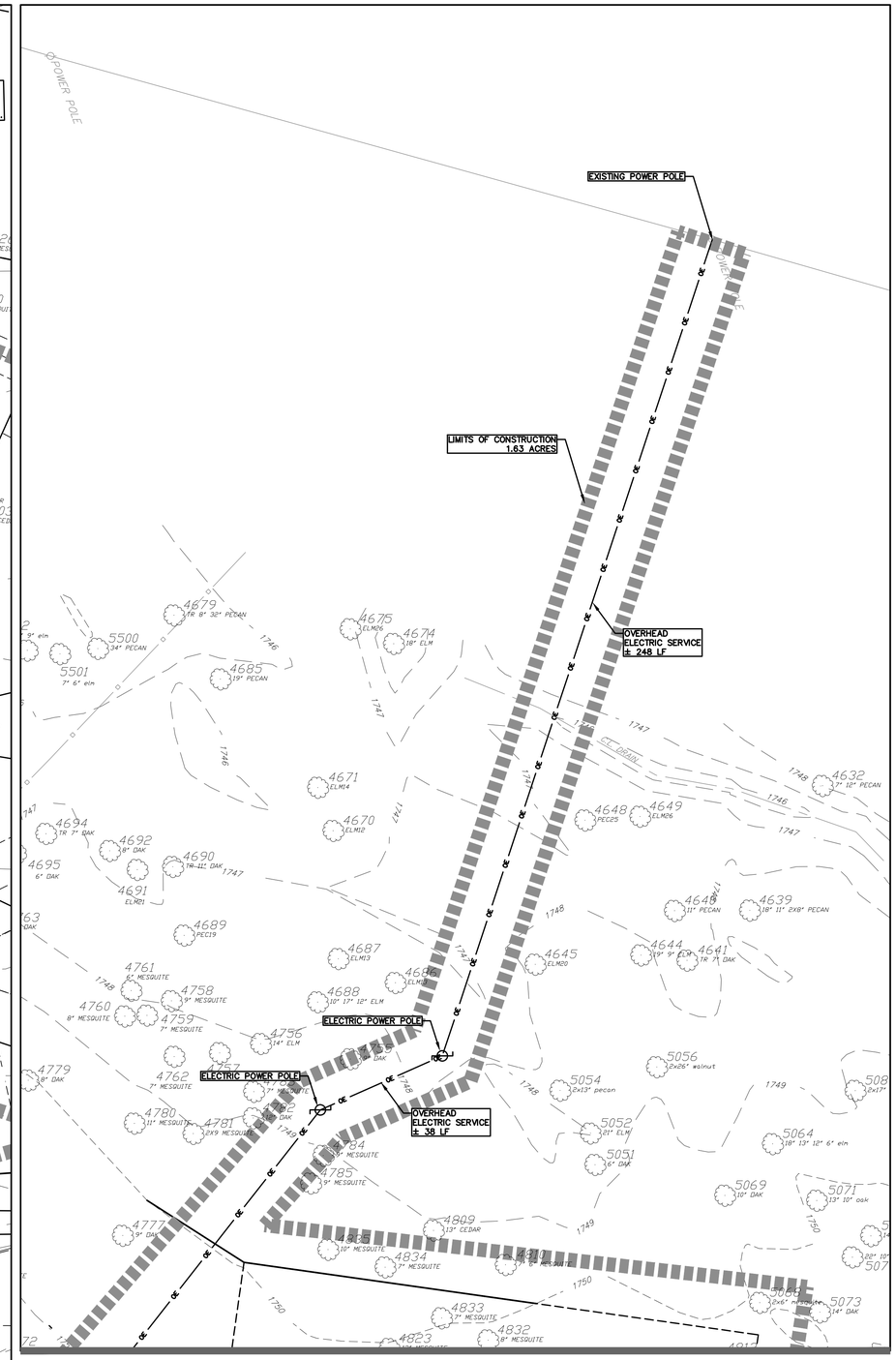


SEE MATCHLINE THIS SHEET

20 0 10 20 40

1" = 20'

## LEGEND

| EXISTING | PROPOSED | DESCRIPTION |
|---|---|---|
| | | POWER POLE |
| | | DOWN GUY |
| | | FIRE HYDRANT |
| | | WATER VALVE |
| | | WATER METER |
| | | WATER METER VAULT (SIZE VARIES) |
| CO | CO | WASTEWATER CLEANOUT |
| | | WASTEWATER MANHOLE (SIZE VARIES) |
| | | SIGN |
| W | XX"W | WATER LINE |
| | XX"WW | WASTEWATER LINE |
| OE | OE | OVERHEAD ELECTRIC |
| | UE | UNDERGROUND ELECTRIC |
| | | EDGE OF WOODS |
| | | EDGE OF ASPHALT |
| | | WOOD FENCE |
| | | EDGE OF TRAIL |
| | | CONCRETE SIDEWALKS |
| 678 | 678 | CONTOUR |
| | FFE | FINISH FLOOR ELEVATION |
| | | SEPTIC FIELD AREA |
| | | LIMITS OF CONSTRUCTION |

**GENERAL UTILITY NOTES:**

1. THE CONTRACTOR SHALL CONTACT THE LOCAL "ONE CALL" SYSTEM FOR EXISTING UTILITY LOCATIONS PRIOR TO ANY EXCAVATION.
2. THE CONTRACTOR IS RESPONSIBLE FOR ANY AND ALL DAMAGES WHICH OCCUR DUE TO FAILURE TO LOCATE AND PRESERVE ANY AND ALL UTILITIES.
3. THE ENGINEER, IN PREPARING THESE PLANS HAS ATTEMPTED TO LOCATE ALL EXISTING UTILITIES IN THE AREAS OF EXPANSION OR NEW CONSTRUCTION. HOWEVER, THERE MAY BE UTILITIES THAT COULD NOT BE OR WERE NOT LOCATED.
4. UNDERGROUND UTILITIES SHOWN ON THE PLANS ARE SHOWN IN APPROXIMATE LOCATIONS ONLY. CONTRACTOR SHALL DETERMINE THE EXACT LOCATIONS AND ELEVATIONS OF ALL EXISTING UTILITIES BEFORE COMMENCING WORK.
5. CONTRACTOR SHALL CALL APPROPRIATE UTILITY COMPANIES FOR LOCATIONS OF THEIR UTILITIES AT LEAST 48 HOURS BEFORE COMMENCING EXCAVATION. IN THE EVENT THAT A UTILITY IS SITUATED SUCH THAT CONSTRUCTION CANNOT PROCEED AS SHOWN ON THE PLANS, THE OWNER AND ENGINEER SHALL BE NOTIFIED IMMEDIATELY.
6. CONTRACTOR SHALL COORDINATE WITH APPROPRIATE UTILITY COMPANIES PRIOR TO CONSTRUCTION, ADJUSTMENT, OR RELOCATION OF EXISTING UTILITIES AS DESIGNATED ON PLANS.
7. CONTRACTOR SHALL COORDINATE INSTALLATION OF UTILITIES IN SUCH A MANNER AS TO AVOID CONFLICTS AND ASSURE PROPER DEPTHS ARE ACHIEVED AS WELL AS COORDINATING WITH LOCAL UTILITY REQUIREMENTS AS TO LOCATION AND SCHEDULING OF CONNECTIONS TO THEIR FACILITIES.
8. THE TOP ELEVATION OF MANHOLES IN UNPAVED AREAS SHALL BE 3" (MIN.) ABOVE FINISH GRADE.
9. CONTRACTOR SHALL COORDINATE INSPECTION OF UTILITY LINES WITH APPROPRIATE AUTHORITIES PRIOR TO BACKFILLING TRENCHES.
10. ALL PRIVATE WASTEWATER LINES WILL COMPLY WITH THE INTERNATIONAL PLUMBING CODE.
11. SEE MECHANICAL / PLUMBING PLANS FOR EXACT LOCATION AND ELEVATION OF WASTEWATER LINES AT THE BUILDING.
12. ALL BACKFLOW DEVICES WILL BE LOCATED WITHIN THE BUILDING SHELL, UNLESS SHOWN ELSEWHERE.
13. ALL ON-SITE WASTEWATER LINES WILL BE EXTENDED TO A MINIMUM OF 5 FEET FROM THE BUILDING.
14. PROVIDE CLEAN-OUTS ON WASTEWATER SERVICE LATERALS PER PLUMBING CODE REQUIREMENTS (MIN. 100' O.C.).
15. IN ADVANCE OF CONSTRUCTION, THE CONTRACTOR SHALL VERIFY THE LOCATIONS OF ALL UTILITIES TO BE EXTENDED, TIED TO, OR ALTERED, OR SUBJECT TO DAMAGE/INCONVENIENCE BY THE CONSTRUCTION OPERATIONS.
16. CONTRACTOR SHALL PROVIDE AN ENGINEERED TRENCH SAFETY PLAN TO THE OWNER / ENGINEER FOR REVIEW PRIOR TO BEGINNING WORK ON THE PROJECT.
17. CONTRACTOR SHALL COMPLY TO THE FULLEST EXTENT WITH THE LATEST OSHA STANDARDS OR DIRECTIVES OR ANY OTHER AGENCY HAVING JURISDICTION FOR EXCAVATION AND TRENCHING PROCEDURES. THE CONTRACTOR SHALL DESIGN AND MAINTAIN ALL SUPPORT SYSTEMS, SLOPING, BENCHING, AND OTHER MEANS OF PROTECTION.
18. CONTRACTOR IS RESPONSIBLE FOR ACQUIRING ALL NECESSARY PERMITS FOR THE OSSF.
19. METALLIC DETECTION TAPE MARKED FOR EACH UTILITY SHALL BE INSTALLED NO DEEPER THAN 18" BELOW SUBGRADE IN THE UTILITY TRENCH.


garza EMC
7708 Rialto Blvd., Suite 125
Austin, Texas 78735
Tel. (512) 298-3284 Fax (512) 298-2592
TBPE # F-14629

Garza EMC, LLC © Copyright 2021


FORD POWELL &CARSON
Architects & Planners, Inc.
Architecture
Planning
Preservation
Interior Design
711 Navarro, Suite 400
San Antonio, Texas 78205
210/226-1246
92706


TEXAS PARKS & WILDLIFE

STATE OF TEXAS
CHRIS M. ALLEN
131852
LICENSED
PROFESSIONAL ENGINEER
04/08/2021

# SOUTH LLANO RIVER STATE PARK
## HEADQUARTERS BUILDING RENOVATION AND EXPANSION
PROJECT NUMBER: 134245

DATE: 04.09.2021
DESIGNED BY:
DRAWN BY:
REVIEWED BY:
REVISED:
REVISED:
REVISED:

CONSTRUCTION DOCUMENTS

SHEET TITLE
UTILITY PLAN

SHEET NUMBER
C600

PATH: V:\101345\00011\Civil\CAD\134245011MUP.dwg

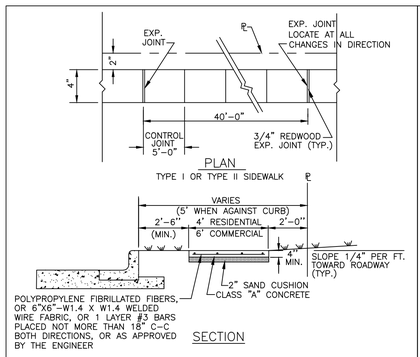


## STANDARD SIDEWALK DETAIL

N.T.S.

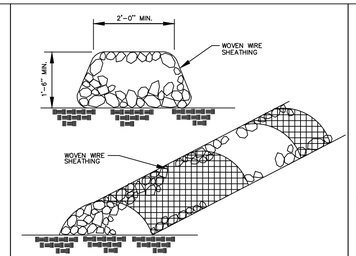


NOTES:

1. USE ONLY OPEN GRADED ROCK 4-8 INCH DIAMETER FOR STREAMFLOW CONDITION; USE OPEN GRADED ROCK 3-5 INCHES DIAMETER FOR OTHER CONDITIONS.
2. THE ROCK BERM SHALL BE SECURED WITH A WOVEN WIRE SHEATHING HAVING MAXIMUM 1 INCH OPENINGS AND MINIMUM WIRE DIAMETER OF 20 GAUGE.
3. THE ROCK BERM SHALL BE INSPECTED WEEKLY OR AFTER EACH RAIN, AND THE STONE AND/OR FABRIC CORE – WOVEN WIRE SHEATHING, SHALL BE REPLACED WHEN THE STRUCTURE CEASES TO FUNCTION AS INTENDED, DUE TO SILT ACCUMULATION AMONG THE ROCKS, WASHOUT, CONSTRUCTION TRAFFIC DAMAGE, ETC.
4. WHEN SILT REACHES A DEPTH EQUAL TO ONE-THIRD THE HEIGHT OF THE BERM OR ONE FOOT, WHICHEVER IS LESS, THE SILT SHALL BE REMOVED AND DISPOSED OF IN AN APPROVED SITE AND IN SUCH A MANNER AS TO NOT CREATE A SILTATION PROBLEM.
5. DAILY INSPECTION SHALL BE MADE ON SEVERE SERVICE ROCK BERMS; SILT SHALL BE REMOVED WHEN ACCUMULATION REACHES 6 INCHES.
6. WHEN THE SITE IS COMPLETELY STABILIZED, THE BERM AND ACCUMULATED SILT SHALL BE REMOVED AND DISPOSED OF IN AN APPROVED MANNER.

## ROCK BERM

N.T.S.

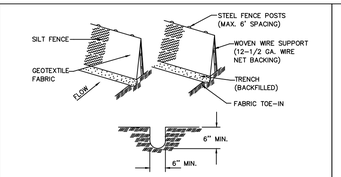


NOTES:

1. STEELPOSTS WHICH SUPPORT THE SILT FENCE SHALL BE INSTALLED ON A SLIGHT ANGLE TOWARD THE ANTICIPATED RUNOFF SOURCE. POST MUST BE EMBEDDED A MINIMUM OF ONE FOOT.
2. THE TOE OF THE SILT FENCE SHALL BE TRENCHED IN WITH A SPADE OR MECHANICAL TRENCHER, SO THAT THE DOWNSLOPE FACE OF THE TRENCH IS FLAT AND PERPENDICULAR TO THE LINE OF FLOW. WHERE FENCE CAN NOT BE TREATED (e.g. pavement), WEIGHT FABRIC FLAP WITH WASHED GRAVEL ON UPHILL SIDE TO PREVENT FLOW UNDER FENCE.
3. THE TRENCH MUST BE A MINIMUM OF 6 INCHES DEEP AND 6 INCHES WIDE TO ALLOW FOR THE SILT FENCE FABRIC TO BE LAID IN THE GROUND AND BACKFILLED WITH COMPACTED MATERIAL.
4. SILT FENCE SHOULD BE SECURELY FASTENED TO EACH STEEL SUPPORT POST OR TO WOVEN WIRE, WHICH IS IN TURN ATTACHED TO THE STEEL FENCE POST.
5. INSPECTION SHALL BE MADE WEEKLY OR AFTER EACH RAINFALL EVENT AND REPAIR OR REPLACEMENT SHALL BE MADE PROMPTLY AS NEEDED.
6. SILT FENCE SHALL BE REMOVED WHEN THE SITE IS COMPLETELY STABILIZED SO AS NOT TO BLOCK OR IMPEDE STORM FLOW OR DRAINAGE.
7. ACCUMULATED SILT SHALL BE REMOVED WHEN IT REACHES A DEPTH OF 6 INCHES. THE SILT SHALL BE DISPOSED OF IN AN APPROVED SITE AND IN SUCH A MANNER AS TO NOT CONTRIBUTE TO ADDITIONAL SILTATION.

## SILT FENCE

N.T.S.

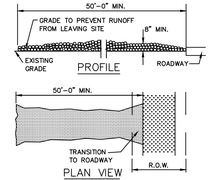


NOTES:

1. STONE SIZE– 3 TO 5 INCH OPEN GRADED ROCK.
2. LENGTH– AS EFFECTIVE, BUT NOT LESS THAN 50 FEET.
3. THICKNESS– NOT LESS THAN 8 INCHES.
4. WIDTH– NOT LESS THAN FULL WIDTH OF ALL POINTS OF INGRESS OR EGRESS.
5. WASHING– WHEN NECESSARY, WHEELS SHALL BE CLEANED TO REMOVE SEDIMENT PRIOR TO ENTRANCE ONTO PUBLIC ROADWAY. WHEN WASHING IS REQUIRED, IT SHALL BE DONE ON AN AREA STABILIZED WITH CRUSHED STONE WHICH DRAINS INTO AN APPROVED STRAP OR SEDIMENT BASIN. ALL SEDIMENT SHALL BE PREVENTED FROM ENTERING ANY STORM DRAIN, DITCH, OR WATERCOURSE USING APPROVED METHODS.
6. MAINTENANCE– THE ENTRANCE SHALL BE MAINTAINED IN A CONDITION WHICH WILL PREVENT TRACKING OR FLOWING OF SEDIMENT ONTO PUBLIC ROADWAYS. THIS MAY REQUIRE PERIODIC TOP DRESSING WITH ADDITIONAL STONE AS CONDITIONS DEMAND, AND REPAIR AND/OR CLEANOUT OF ANY MEASURES USED TO TRAP SEDIMENT. ALL SEDIMENT SPILLED, DROPPED, WASHED OR TRACKED ONTO PUBLIC ROADWAY MUST BE REMOVED IMMEDIATELY.
7. DRAINAGE– ENTRANCE MUST BE PROPERLY GRADED OR INCORPORATE A DRAINAGE SWALE TO PREVENT RUNOFF FROM LEAVING THE CONSTRUCTION SITE.

## STABILIZED CONSTRUCTION ENTRANCE

N.T.S.

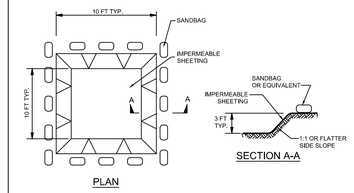


EXCAVATED WASHOUT STRUCTURE

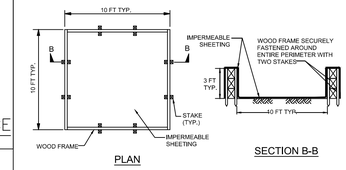


WASHOUT STRUCTURE WITH WOOD PLANKS

1 OF 2

**ONSITE CONCRETE WASHOUT STRUCTURE**

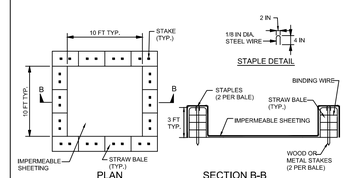


NOTE: CAN BE TWO STACKED BALES OR PARTIALLY EXCAVATED TO REACH 3 FT DEPTH

WASHOUT STRUCTURE WITH STRAW BALES

CONSTRUCTION SPECIFICATIONS

1. LOCATE WASHOUT STRUCTURE A MINIMUM OF 50 FEET AWAY FROM OPEN CHANNELS, STORM DRAIN INLETS, SENSITIVE AREAS, WETLANDS, BUFFERS AND WATER COURSES AND AWAY FROM CONSTRUCTION TRAFFIC.
2. SIZE WASHOUT STRUCTURE FOR VOLUME NECESSARY TO CONTAIN WASH WATER AND SOLIDS AND MAINTAIN AT LEAST 4 INCHES OF FREEBOARD. TYPICAL DIMENSIONS ARE 10 FEET X 10 FEET X 3 FEET DEEP.
3. PREPARE SOIL BASE FREE OF ROCKS OR OTHER DEBRIS THAT MAY CAUSE TEARS OR HOLES IN THE LINER. FOR LINER, USE 10 MIL OR THICKER UV RESISTANT, IMPERMEABLE SHEETING. FREE OF HOLES AND TEARS OR OTHER DEFECTS THAT COMPROMISE IMPERMEABILITY OF THE MATERIAL.
4. PROVIDE A SIGN FOR THE WASHOUT IN CLOSE PROXIMITY TO THE FACILITY.
5. KEEP CONCRETE WASHOUT STRUCTURE WATER TIGHT. REPLACE IMPERMEABLE LINER IF DAMAGED (E.G., RIPPED OR PUNCTURED). EMPTY OR REPLACE WASHOUT STRUCTURE THAT IS 75 PERCENT FULL. AND DISPOSE OF ACCUMULATED MATERIAL PROPERLY. DO NOT REUSE PLASTIC LINER. WET-VACUUM STORED LIQUIDS THAT HAVE NOT EVAPORATED AND DISPOSE OF IN AN APPROVED MANNER. PRIOR TO FORECASTED RAINSTORMS, REMOVE LIQUIDS OR COVER STRUCTURE TO PREVENT OVERFLOWS. REMOVE HARDENED SOLIDS. WHOLE OR BROKEN UP. FOR DISPOSAL OR RECYCLING. MAINTAIN RUNOFF DIVERSION AROUND EXCAVATED WASHOUT STRUCTURE UNTIL STRUCTURE IS REMOVED.

2 OF 2

**ONSITE CONCRETE WASHOUT STRUCTURE**

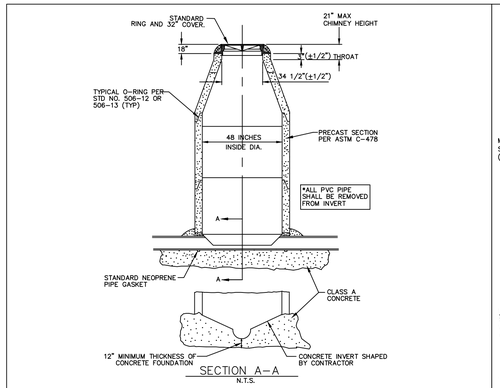


## PRECAST MANHOLE ON CAST-IN-PLACE FOUNDATION

N.T.S.

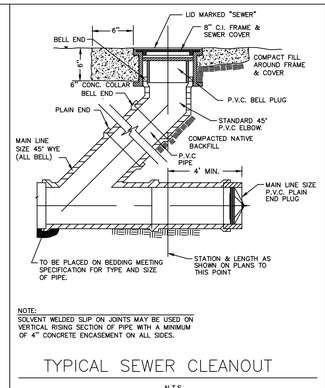


NOTE:
SOLVENT WELDED SLIP ON JOINTS MAY BE USED ON VERTICAL RISING SECTION OF PIPE WITH A MINIMUM OF 4" CONCRETE ENCASEMENT ON ALL SIDES.

## TYPICAL SEWER CLEANOUT

N.T.S.

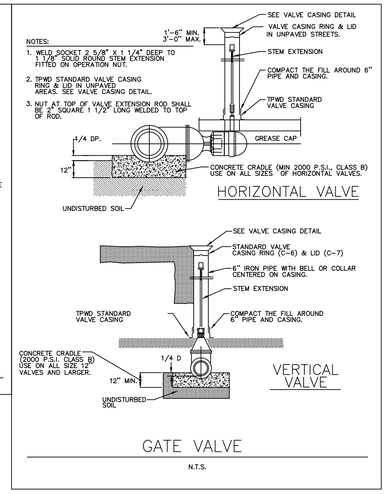


NOTES:

1. WELD SOCKET 2 5/8" X 1 1/4" DEEP TO 1 1/8" SOLID ROUND STEM EXTENSION FITTED ON OPERATION NUT.
2. TPWD STANDARD VALVE CASING RING & LID IN UNPAVED AREAS. SEE VALVE CASING DETAIL.
3. NUT AT TOP OF VALVE EXTENSION ROD SHALL BE 2" SQUARE 1 1/2" LONG WELDED TO TOP OF ROD.

## GATE VALVE

N.T.S.

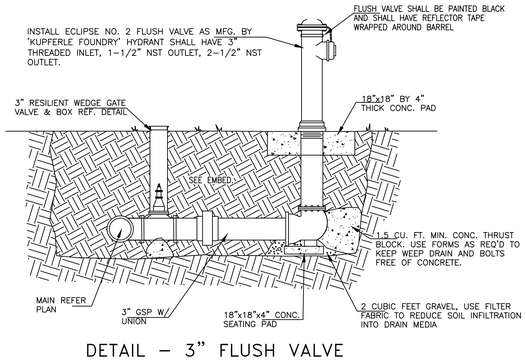


## DETAIL – 3" FLUSH VALVE

N.T.S.

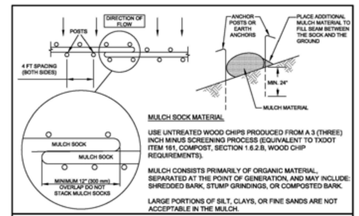


MULCH SOCK MATERIAL

USE UNTREATED WOOD CHIPS PRODUCED FROM A 3 (THREE) INCH MINUS SCREENING PROCESS (EQUIVALENT TO TXDOT ITEM 161, COMPOST, SECTION 1.6.2.B, WOOD CHIP REQUIREMENTS).

MULCH CONSISTS PRIMARILY OF ORGANIC MATERIAL; SEPARATED AT THE POINT OF GENERATION, AND MAY INCLUDE: SHREDDED BARK, STUMP GRINDINGS, OR COMPOSTED BARK.

LARGE PORTIONS OF SILT, CLAYS, OR FINE SANDS ARE NOT ACCEPTABLE IN THE MULCH.

NOTES:

1. STEEL OR WOOD POSTS WHICH SUPPORT THE MULCH SOCK SHALL BE INSTALLED ON A SLIGHT ANGLE TOWARD THE ANTICIPATED RUNOFF SOURCE. POST MUST BE EMBEDDED A MINIMUM OF 600mm (24 inches). IF WOOD POSTS CANNOT ACHIEVE 600mm (24 inches) DEPTH, USE STEEL POSTS. EARTH ANCHORS ARE ALSO ACCEPTABLE.
2. THE TOE OF THE MULCH SOCK SHALL BE PLACED SO THAT THE MULCH SOCK IS FLAT AND PERPENDICULAR TO THE LINE OF FLOW. IN ORDER TO PREVENT WATER FROM FLOWING BETWEEN THE JOINTS OF ADJACENT ENDS OFMULCH SOCKS, LAP THE ENDS OF ADJACENT MULCH SOCKS A MINIMUM OF 300mm (12 inches).
3. MULCH MATERIAL MUST BE FREE OF REFUSE, PHYSICAL CONTAMINANTS, AND MATERIAL TOXIC TO PLANT GROWTH. IT IS NOT ACCEPTABLE FOR THE MULCH MATERIAL TO CONTAIN GROUND CONSTRUCTION DEBRIS, BIOSOLIDS, OR MANURE.
4. SOCK MATERIAL WILL BE 100% BIODEGRADABLE, PHOTODEGRADABLE, OR RECYCLABLE SUCH AS BURLAP, TWINE, UV PHOTOBIODEGRADABLE PLASTIC, POLYESTER, OR ANY OTHER ACCEPTABLE MATERIAL.
5. MULCH SOCKS SHOULD BE USED AT THE BASE OF SLOPES NO STEEPER THAN 2:1 AND SHOULD NOT EXCEED THE MAXIMUM SPACING CRITERIA PROVIDED IN CITY OF AUSTIN ENVIRONMENTAL CRITERIA MANUAL TABLE 1.4.5.F.1 FOR A GIVEN SLOPE CATEGORY.
6. ACCUMULATED SILT SHALL BE REMOVED WHEN IT REACHES A DEPTH OF 150mm (6 inches). THE SILT SHALL BE DISPOSED OF ON AN APPROVED SITE AND IN SUCH A MANNER THAT WILL NOT CONTRIBUTE TO ADDITIONAL SILTATION.

| | | |
|---|---|---|
| XX/XX/10 ADOPTED | THE ARCHITECT/ENGINEER ASSUMES RESPONSIBILITY FOR ATTROPRIATE USE OF THIS STANDARD. | STANDARD NO. 646S-1 |

MULCH SOCK

WW A

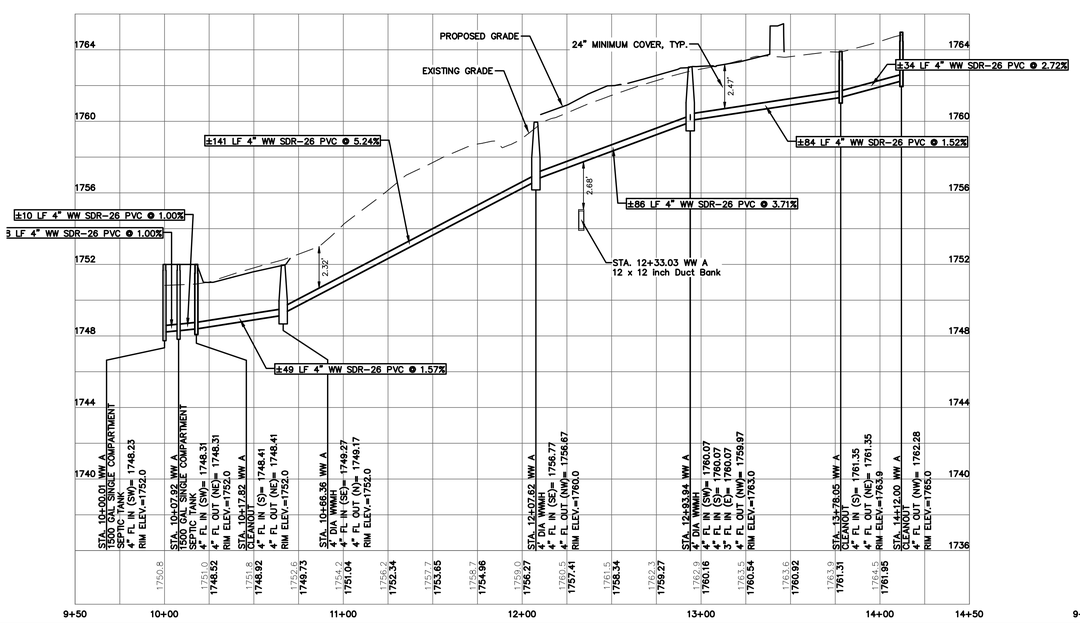


WW A-2

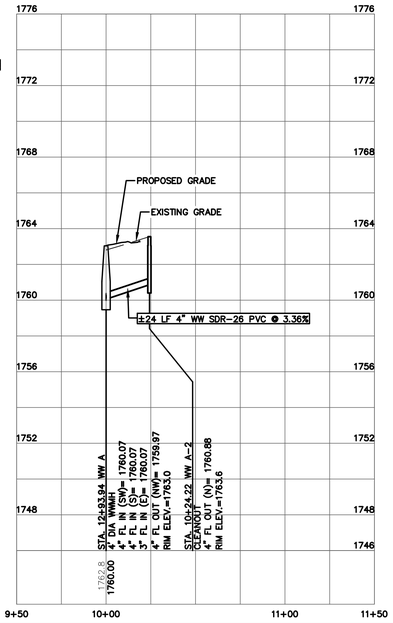


WW A-3

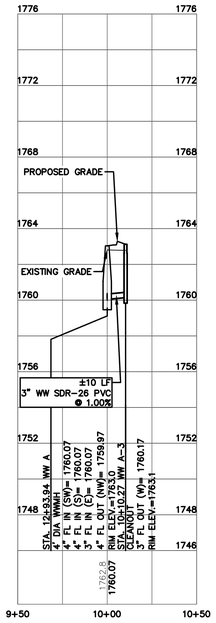


| PROFILE LEGEND | PROFILE SCALE |
|---|---|
| EXISTING GRADE<br>PROPOSED GRADE<br>PROPOSED PIPE<br>ELEVATION EXISTING GRADE 653.1<br>658.34 FL ELEVATION PROPOSED PIPE | 1" = 40' HORIZONTAL<br>1" = 4' VERTICAL |

garza EMC
7708 Rialto Blvd., Suite 125
Austin, Texas 78735
Tel. (512) 298-3284 Fax (512) 298-2592
TBPE # F-14629
Garza EMC, LLC © Copyright 2021

FORD POWELL &CARSON
Architects & Planners, Inc.
Architecture
Planning
Preservation
Interior Design
711 Navarro, Suite 400
San Antonio, Texas 78205
210/226-1246
92706

TEXAS PARKS & WILDLIFE

STATE OF TEXAS
CHRIS M. ALLEN
131852
LICENSED PROFESSIONAL ENGINEER
04/08/2021

# SOUTH LLANO RIVER STATE PARK
## HEADQUARTERS BUILDING RENOVATION AND EXPANSION
PROJECT NUMBER: 134245

DATE: 04.09.2021
DESIGNED BY:
DRAWN BY:
REVIEWED BY:
REVISED:
REVISED:
REVISED:

**SHEET TITLE**
DETAILS SHEET

SHEET NUMBER
C700

CONSTRUCTION DOCUMENTS

PATH: V:\101345\00011\Civil\CAD\134245011DET.dwg

**South Llano River State Park**
**Park Headquarters**
**1927 Park Rd**
**Junction, TX 76849**

**Proposed On-Site Sewage Facility**
**Designed by Pamela Weishuhn RS**

April 04, 2018

South Llano State Park

Junction TX

**SEPTIC SYSTEM & DRAINFIELD SIZING**

Water usage rates where based on the average per day number of visitors over a 10 year span. Between 2008 and 2017 the park averaged 121.46 visitors per day. The highest average was in 2009 with 150 visitors/day. The water usge used in this design is based on future growth of the park.

Daily waste water usage rate:

Park office with 7 employees and 180 visitors/day at 8 gpd ea= 1500 gpd

Total gallons per day GPD for this system = 1500 gpd

For Q = 1500 GPD: V= 2875 gallon septic tank.

Absorptive Area
A = Q/Ra
A= Absorptive Area
Q= The waste water usage rate in gallons per day.
Ra = The soil application rate in gallons per square feet per day.
A = 1500/.20
**A = 7500 SF**

Leaching Chamber Sizing:
L=.75 x A(W+2)
L= Length
A= minimum absorptive area
W= Width of Leaching Chambers
L=.75 x 7500/(3.0+2)
**L=1125 ft**

Panels:
# of panels = L/4
=1125/4
=281.25
**# of panels required = 282 will be used.**

## The design specifications:

1. The South Llano River State Park headquarters, utilizing 1500 GPD is located at 1927 Park Rd, Junction TX.

2. Effluent will be conveyed to the septic tank through a 4.0" Sch 40 solid wall PVC pipe at a minimum slope of 1/8 " per foot.

3. Two 1500 gallon single compartment septic tanks will be utilized.

4. All Tanks must be set in accordance with TCEQ regulations. All tanks must be water tight and must have an impervious seal. If the tank(s) are installed with more than 12" of ground cover then risers will be required.

5. "T" branches with downward extensions will be used inside of each tank on the inlets and outlets as required.

6. The effluent from the septic tanks(s) will be conveyed to the absorption field through a solid PVC pipe.

7. The absorption field will consist of leaching chambers using a class III soil. The number of panels utilized will be 282.

Final trench construction consists of covering the surface of the trench with vegetation having good transpiration properties and providing the most storm water diversion that is possible.

Maintenance

Septic tanks required occasional pumping to remove sludge and scum build up. It is the owners responsibility to maintain the system an make necessary repairs in order for it to perform properly.

Pamela Weishuhn
RS # 3592

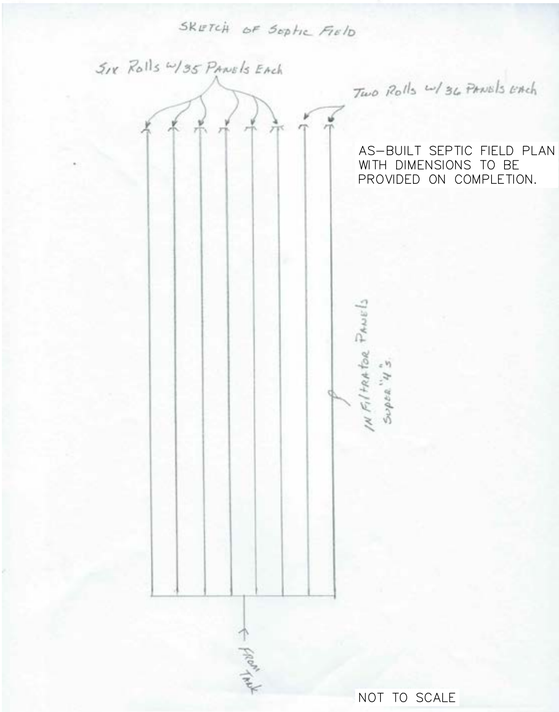



garza EMC
7708 Rialto Blvd., Suite 125
Austin, Texas 78735
Tel. (512) 298-3284 Fax (512) 298-2592
TBPE # F-14629

Garza EMC, LLC © Copyright 2021


FORD POWELL &CARSON
Architects & Planners, Inc.
Architecture
Planning
Preservation
Interior Design
711 Navarro, Suite 400
San Antonio, Texas 78205
210/226-1246
92706


TEXAS PARKS & WILDLIFE

SOUTH LLANO RIVER STATE PARK
HEADQUARTERS BUILDING RENOVATION AND EXPANSION
PROJECT NUMBER: 134245

DATE: 04.09.2021
DESIGNED BY:
DRAWN BY:
REVIEWED BY:
REVISED:
REVISED:
REVISED:

CONSTRUCTION DOCUMENTS

SHEET TITLE
SEPTIC SYSTEM DESIGN

SHEET NUMBER
C800

PATH: V:\101345\00011\Civil\CAD\134245011OSSF.dwg

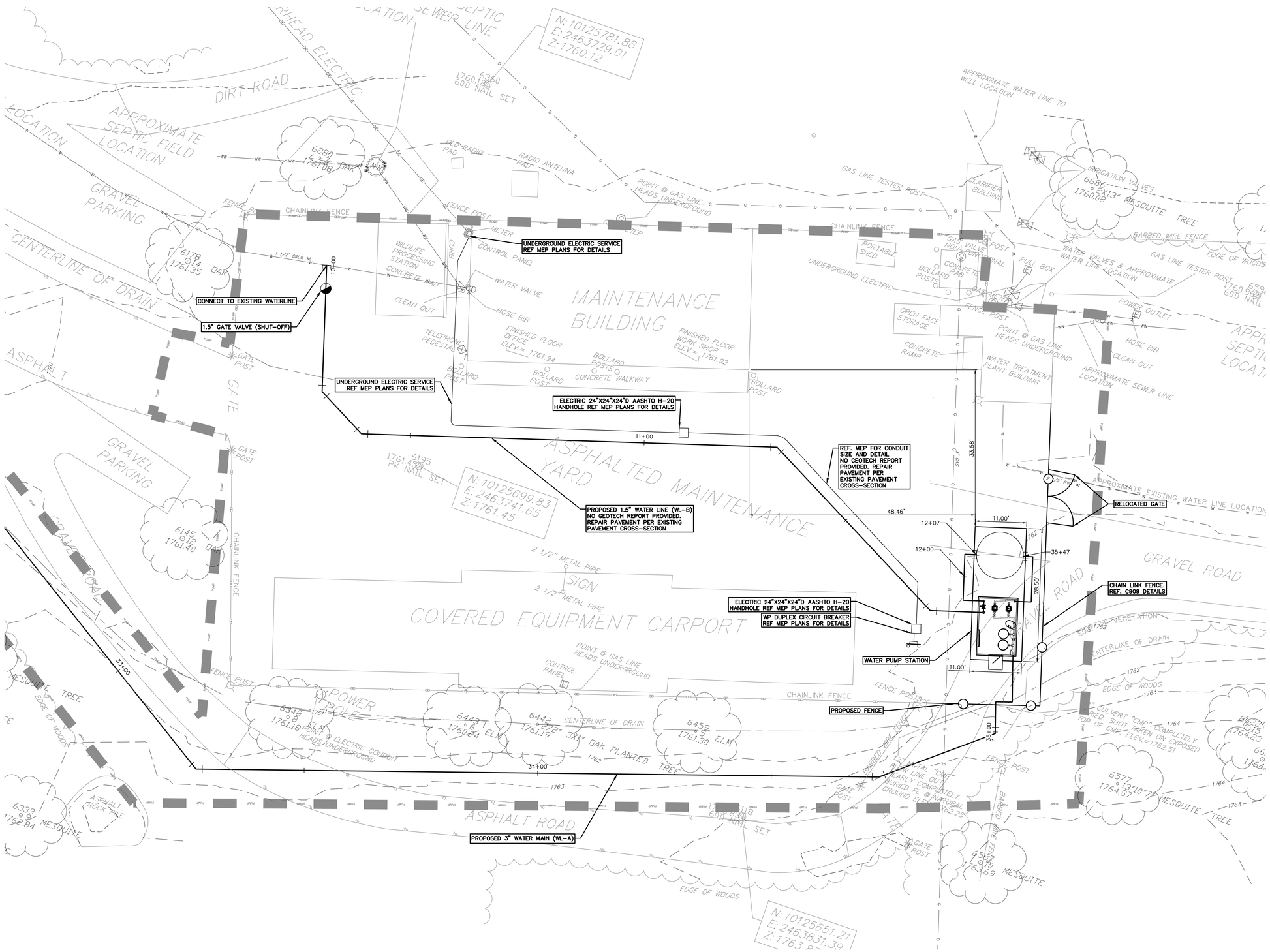


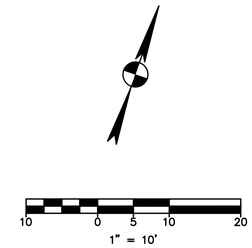


**NOTES:**

1. REFERENCE STRUCTURAL PLANS FOR CONCRETE PAD DETAILS.
2. REFERENCE MEP PLANS FOR POWER AND LIGHTING IMPROVEMENTS REQUIRED FOR PUMP STATION.
3. THIS PROJECT IS APPROXIMATELY LOCATED AT LATITUDE 30.4442926° & LONGITUDE -099.8024678°.

TEXAS PARKS & WILDLIFE

JULIA L. MRNAK 113030 04/09/2021

# SOUTH LLANO RIVER STATE PARK
## HEADQUARTERS BUILDING RENOVATION AND EXPANSION
PROJECT NUMBER: 134245

DATE: 04.09.2021
DESIGNED BY:
DRAWN BY:
REVIEWED BY:
REVISED:
REVISED:
REVISED:

**CONSTRUCTION DOCUMENTS** Apr 14, 21 11:01 AM

garza EMC
7708 Rialto Blvd., Suite 125
Austin, Texas 78735
Tel. (512) 298-3284 Fax (512) 298-2592
TBPE # F-14629
Garza EMC, LLC © Copyright 2021

FORD POWELL &CARSON Architects & Planners, Inc.
Architecture
Planning
Preservation
Interior Design
711 Navarro, Suite 400
San Antonio, Texas 78205
210/226-1246
92706

SHEET TITLE
PUMP STATION SITE PLAN

SHEET NUMBER
C900

PATH: V:\101345\00011\Civil\CAD\PUMP STATION\134250115PN.dwg

V:\101345\00011\Civil\CAD\PUMP STATION\134250115PN.dwg

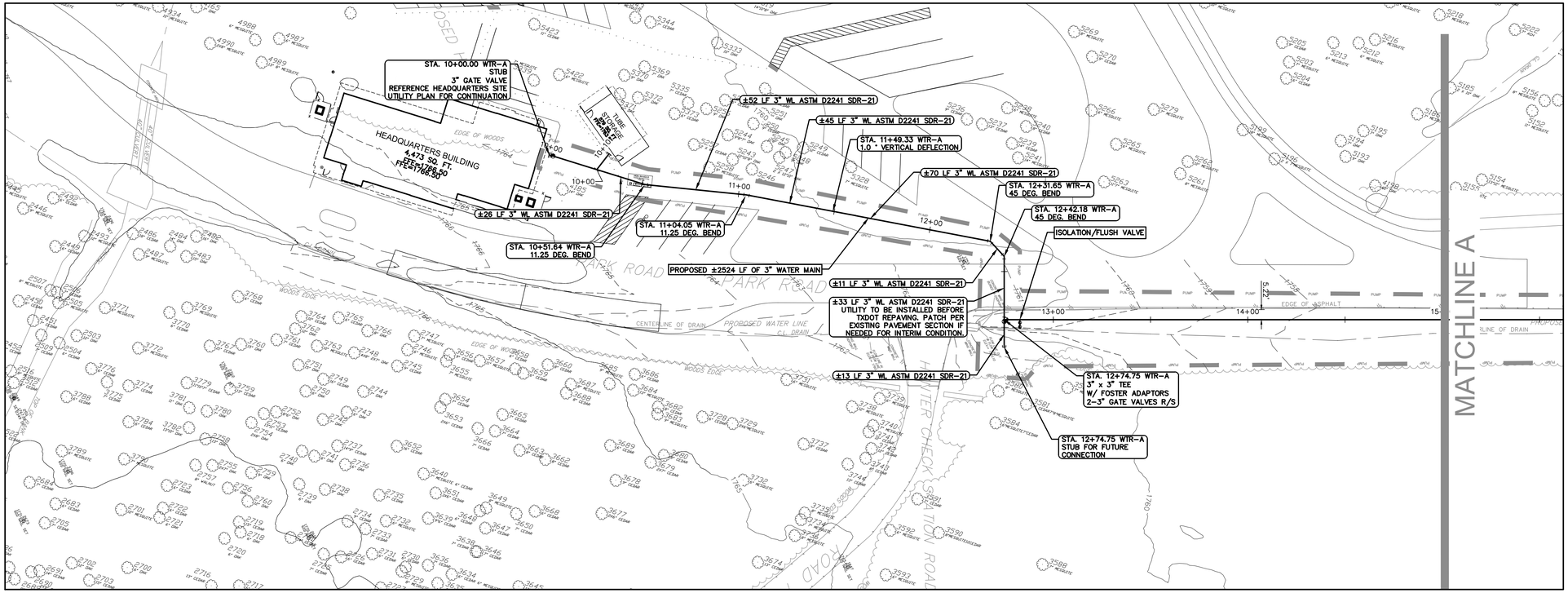


# WATERLINE ROUTING PLAN AND PROFILE A

SCALE: 1"=30'

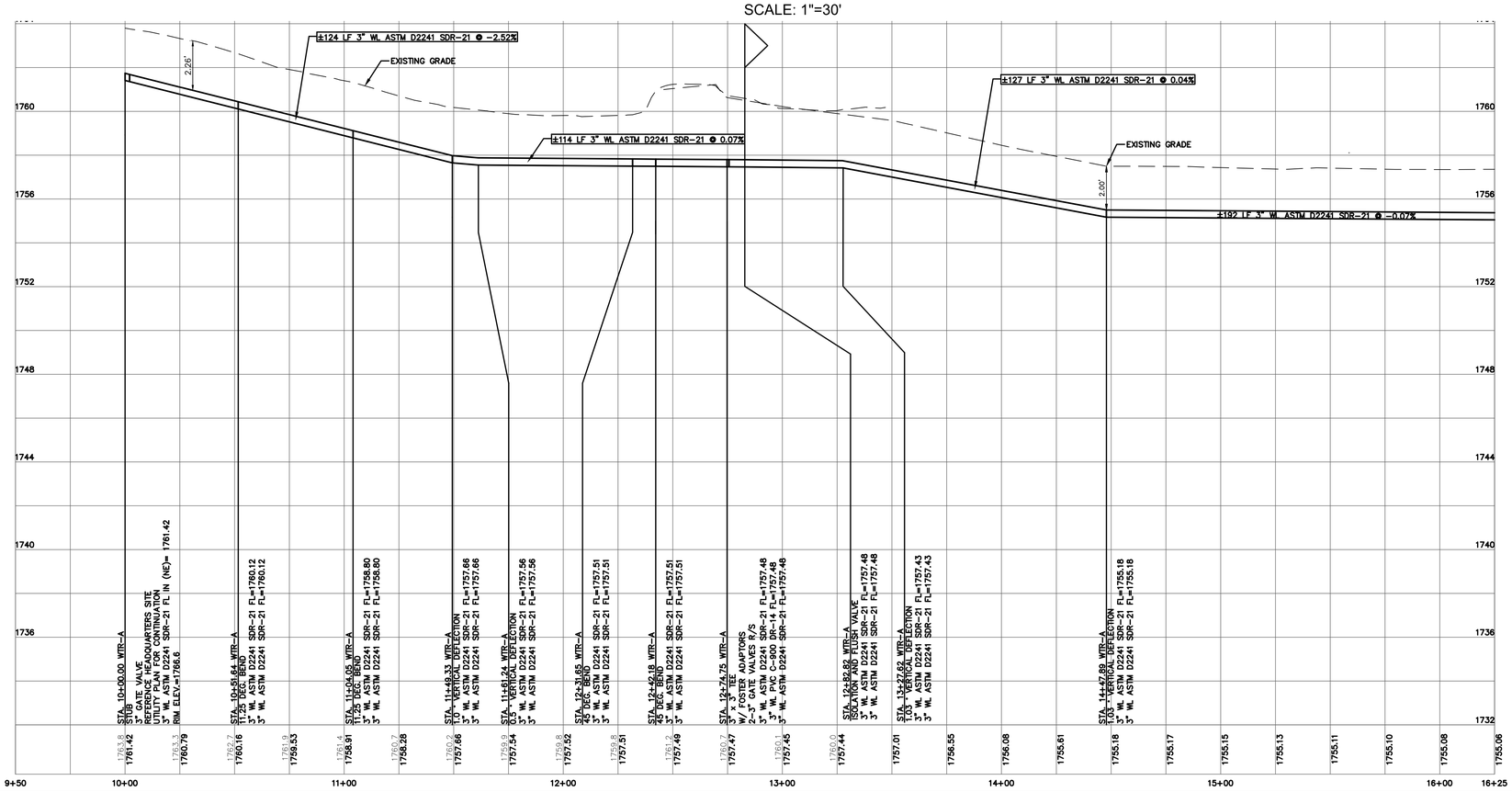


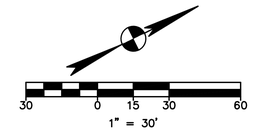


## LEGEND

| EXISTING | PROPOSED | DESCRIPTION |
|---|---|---|
| | | PROPERTY LINE / R.O.W. LINE |
| | | RECORD INFORMATION |
| | | LIGHT POLE |
| | | GROUND LIGHT |
| | | POWER POLE |
| | | DOWN GUY |
| WTRMH | | WATER MANHOLE |
| | | WATER LINE MARKER |
| CMKR | | UNDERGROUND CABLE MARKER |
| GMKR | | UNDERGROUND GAS LINE MARKER |
| UTM | | UNDERGROUND TELEPHONE MARKER |
| GSR | | GAS RISER |
| TSR | | TELEPHONE RISER |
| | | SPRINKLER CONTROL BOX |
| | SW | SWITCH GEAR & PAD |
| | T | TRANSFORMER (SIZE VARIES) |
| | | FIRE HYDRANT |
| | | WATER VALVE |
| | | WATER METER |
| | | WATER METER VAULT (SIZE VARIES) |
| | CATV | CABLE TV RISER |
| | E | ELECTRIC BOX |
| | EM | ELECTRIC METER |
| | GM | GAS METER |
| | | GAS VALVE |
| TCB | TCB | TRAFFIC CONTROL BOX |
| TSP | TSP | TRAFFIC SIGNAL POST |
| | | GRATE INLET |
| | | CURB INLET (SIZE VARIES) |
| | | GREASE TRAP (SIZE VARIES) |
| EMH | | ELECTRIC MANHOLE (SIZE VARIES) |
| WMH | | WASTEWATER MANHOLE (SIZE VARIES) |
| SSMH | | STORMSEWER MANHOLE (SIZE VARIES) |
| TMH | TMH | TELEPHONE MANHOLE (SIZE VARIES) |
| CO | CO | WASTEWATER CLEANOUT |
| X | X | WIRE FENCE |
| // | // | WOOD FENCE |
| | | CHAIN LINK FENCE |
| | | CURB & GUTTER |
| | | EDGE OF PAVEMENT |
| | | CONCRETE SIDEWALKS |
| | | WALL |
| | | LIMITS OF CONSTRUCTION |
| 678 | 678 | CONTOUR |
| SS | SS | STORMSEWER LINE |
| W | W | WATER LINE |
| | | FIRE LINE |
| WW | WW | WASTEWATER LINE |
| G | G | GAS LINE |
| UE | UE | UNDERGROUND ELECTRIC LINE |
| OE | OE | OVERHEAD ELECTRIC LINE |
| UT | UT | UNDERGROUND TELEPHONE LINE |
| UC | UC | UNDERGROUND CABLE AND INTERNET |
| U-COMM | U-COMM | UNDERGROUND TELECOMMUNICATIONS |
| | FFE | FINISH FLOOR ELEVATION |
| | | TREE TO BE SAVED |
| | | HERITAGE / MATURE TREE |

| PROFILE LEGEND | PROFILE SCALE |
|---|---|
| EXISTING GRADE<br>PROPOSED GRADE<br>PROPOSED PIPE | 1" = 30' HORIZONTAL<br>1" = 3' VERTICAL |
| ELEVATION EXISTING GRADE 653.1<br>FL ELEVATION PROPOSED PIPE 658.34 | |

RESTRAIN ALL JOINTS.

TEXAS PARKS & WILDLIFE

JULIA L. MRNAK 113030 04/09/2021

# SOUTH LLANO RIVER STATE PARK
## HEADQUARTERS BUILDING RENOVATION AND EXPANSION
PROJECT NUMBER: 134245

DATE: 04.09.2021
DESIGNED BY:
DRAWN BY:
REVIEWED BY:
REVISED:
REVISED:
REVISED:

CONSTRUCTION DOCUMENTS

garza EMC
7708 Rialto Blvd., Suite 125
Austin, Texas 78735
Tel. (512) 298-3284 Fax (512) 298-2592
TBPE # F-14629
Garza EMC, LLC © Copyright 2021

FORD POWELL &CARSON Architects & Planners, Inc.
Architecture
Planning
Preservation
Interior Design
711 Navarro, Suite 400
San Antonio, Texas 78205
210/226-1246
92706

SHEET TITLE
WATERLINE PLAN AND PROFILE A

SHEET NUMBER
C901

PATH: V:\101345\00011\Civil\CAD\101345011WTR-01.dwg

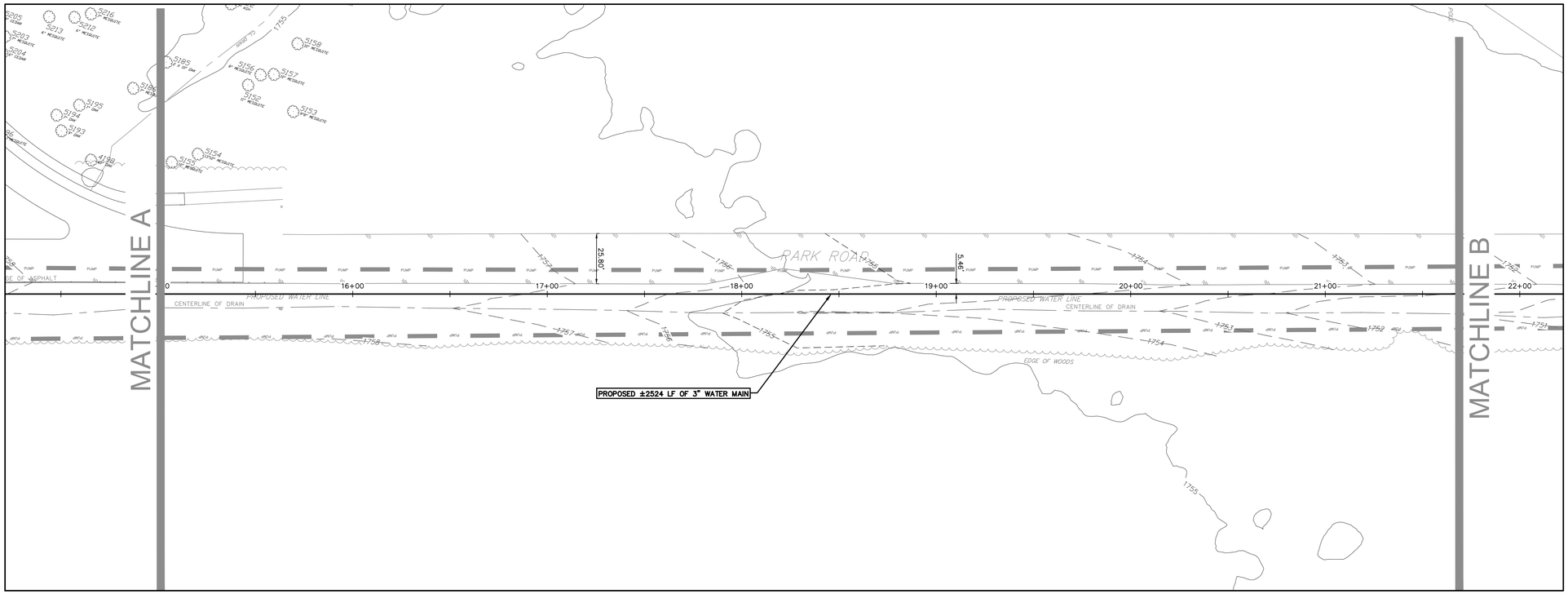


# WATERLINE ROUTING PLAN AND PROFILE B

SCALE: 1"=30'

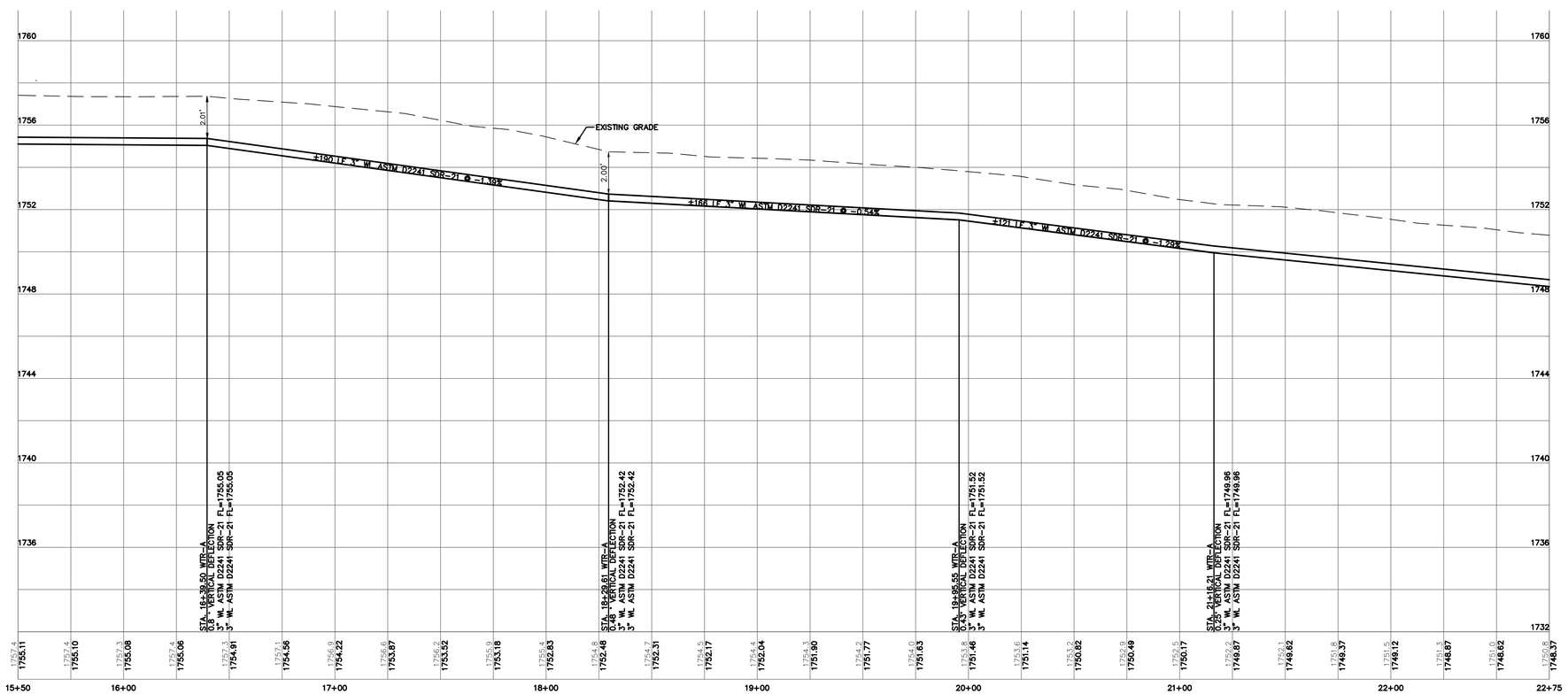


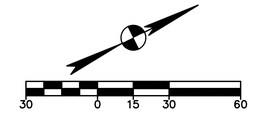


## LEGEND

| EXISTING | PROPOSED | DESCRIPTION |
|---|---|---|
| | | PROPERTY LINE / R.O.W. LINE |
| | | RECORD INFORMATION |
| | | LIGHT POLE |
| | | GROUND LIGHT |
| | | POWER POLE |
| | | DOWN GUY |
| WTRMH | | WATER MANHOLE |
| | | WATER LINE MARKER |
| CMKR | | UNDERGROUND CABLE MARKER |
| GMKR | | UNDERGROUND GAS LINE MARKER |
| UTM | | UNDERGROUND TELEPHONE MARKER |
| GRSR | | GAS RISER |
| TRSR | | TELEPHONE RISER |
| SPK | | SPRINKLER CONTROL BOX |
| | SW | SWITCH GEAR & PAD |
| | T | TRANSFORMER (SIZE VARIES) |
| | | FIRE HYDRANT |
| | | WATER VALVE |
| | | WATER METER |
| | | WATER METER VAULT (SIZE VARIES) |
| | | CABLE TV RISER |
| | E | ELECTRIC BOX |
| EM | EM | ELECTRIC METER |
| GM | GM | GAS METER |
| | | GAS VALVE |
| TCB | TCB | TRAFFIC CONTROL BOX |
| TSP | TSP | TRAFFIC SIGNAL POST |
| | | GRATE INLET |
| | | CURB INLET (SIZE VARIES) |
| | | GREASE TRAP (SIZE VARIES) |
| EMH | | ELECTRIC MANHOLE (SIZE VARIES) |
| WWMH | | WASTEWATER MANHOLE (SIZE VARIES) |
| SSMH | | STORMSEWER MANHOLE (SIZE VARIES) |
| TMH | TMH | TELEPHONE MANHOLE (SIZE VARIES) |
| CO | CO | WASTEWATER CLEANOUT |
| X | X | WIRE FENCE |
| // | // | WOOD FENCE |
| | | CHAIN LINK FENCE |
| | | CURB & GUTTER |
| | | EDGE OF PAVEMENT |
| | | CONCRETE SIDEWALKS |
| | | WALL |
| | | LIMITS OF CONSTRUCTION |
| 678 | 678 | CONTOUR |
| SS | | STORMSEWER LINE |
| W | | WATER LINE |
| | | FIRE LINE |
| WW | | WASTEWATER LINE |
| G | | GAS LINE |
| UE | UE | UNDERGROUND ELECTRIC LINE |
| OE | OE | OVERHEAD ELECTRIC LINE |
| OE | UT | UNDERGROUND TELEPHONE LINE |
| UC | UC | UNDERGROUND CABLE AND INTERNET |
| U-COMM | U-COMM | UNDERGROUND TELECOMMUNICATIONS |
| | FFE | FINISH FLOOR ELEVATION |
| | | TREE TO BE SAVED |
| | | HERITAGE / MATURE TREE |

| PROFILE LEGEND | PROFILE SCALE |
|---|---|
| EXISTING GRADE<br>PROPOSED GRADE<br>PROPOSED PIPE | 1" = 30' HORIZONTAL<br>1" = 3' VERTICAL |
| ELEVATION EXISTING GRADE 653.1 / FL ELEVATION PROPOSED PIPE 658.34 | |

RESTRAIN ALL JOINTS.

garza EMC
7708 Rialto Blvd., Suite 125
Austin, Texas 78735
Tel. (512) 298-3284 Fax (512) 298-2592
TBPE # F-14629
Garza EMC, LLC © Copyright 2021

FORD POWELL & CARSON
Architects & Planners, Inc.
Architecture
Planning
Preservation
Interior Design
711 Navarro, Suite 400
San Antonio, Texas 78205
210/226-1246
92706

TEXAS PARKS & WILDLIFE

JULIA L. MRNAK 113030 04/09/2021

# SOUTH LLANO RIVER STATE PARK
## HEADQUARTERS BUILDING RENOVATION AND EXPANSION
PROJECT NUMBER: 134245

DATE: 04.09.2021
DESIGNED BY:
DRAWN BY:
REVIEWED BY:
REVISED:
REVISED:
REVISED:

CONSTRUCTION DOCUMENTS

SHEET TITLE
WATERLINE PLAN AND PROFILE B

SHEET NUMBER
C902

PATH: V:\101345\00011\Civil\CAD\101345011WTR-03.dwg

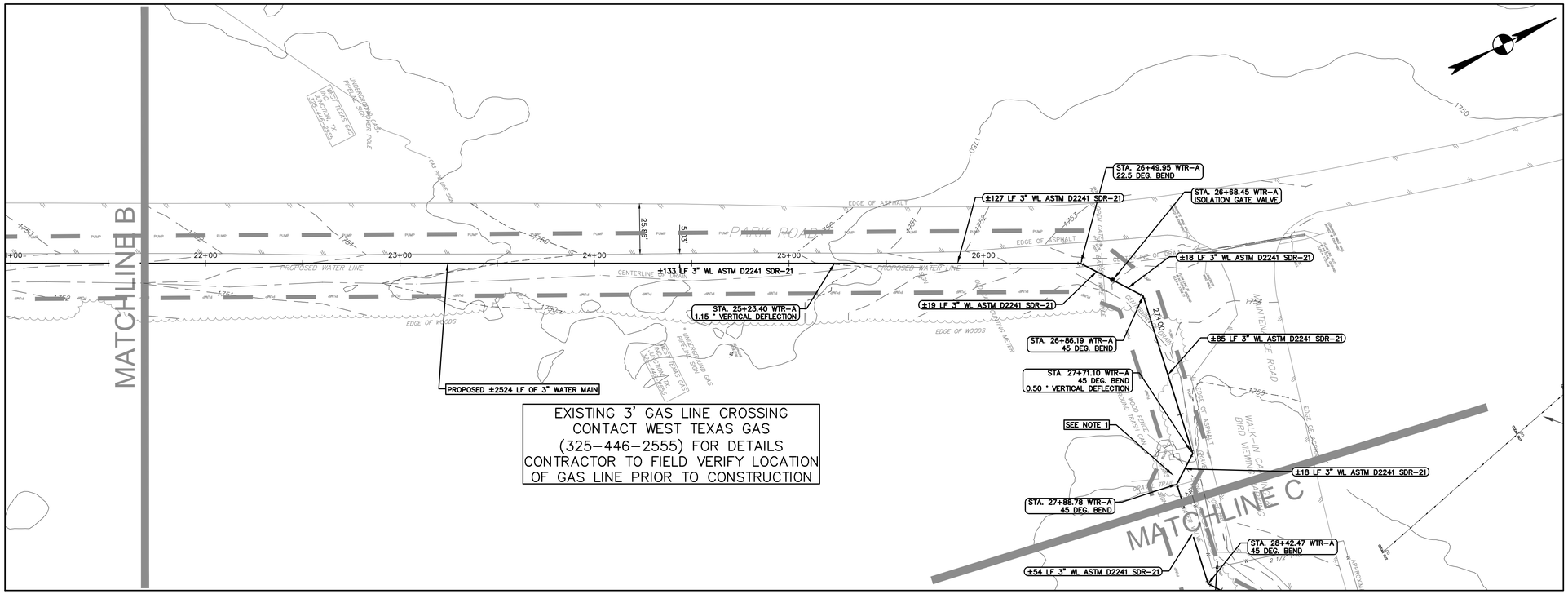


EXISTING 3' GAS LINE CROSSING
CONTACT WEST TEXAS GAS
(325-446-2555) FOR DETAILS
CONTRACTOR TO FIELD VERIFY LOCATION
OF GAS LINE PRIOR TO CONSTRUCTION

# WATERLINE ROUTING PLAN AND PROFILE C

SCALE: 1"=30'

30 0 15 30 60

1" = 30'

## LEGEND

| EXISTING | PROPOSED | DESCRIPTION |
|---|---|---|
| | | PROPERTY LINE / R.O.W. LINE |
| | | RECORD INFORMATION |
| | | LIGHT POLE |
| | | GROUND LIGHT |
| | | POWER POLE |
| | | DOWN GUY |
| WTRMH | | WATER MANHOLE |
| | | WATER LINE MARKER |
| CMCR | | UNDERGROUND CABLE MARKER |
| GMCR | | UNDERGROUND GAS LINE MARKER |
| UGTM | | UNDERGROUND TELEPHONE MARKER |
| GRSR | | GAS RISER |
| TRSR | | TELEPHONE RISER |
| SPCB | | SPRINKLER CONTROL BOX |
| | SW | SWITCH GEAR & PAD |
| | T | TRANSFORMER (SIZE VARIES) |
| | | FIRE HYDRANT |
| | | WATER VALVE |
| | | WATER METER |
| | WV | WATER METER VAULT (SIZE VARIES) |
| | | CABLE TV RISER |
| | | ELECTRIC BOX |
| | | ELECTRIC METER |
| | | GAS METER |
| | | GAS VALVE |
| TCB | TCB | TRAFFIC CONTROL BOX |
| TSP | TSP | TRAFFIC SIGNAL POST |
| | | GRATE INLET |
| | | CURB INLET (SIZE VARIES) |
| | | GREASE TRAP (SIZE VARIES) |
| EMH | | ELECTRIC MANHOLE (SIZE VARIES) |
| WWMH | | WASTEWATER MANHOLE (SIZE VARIES) |
| SSMH | | STORMSEWER MANHOLE (SIZE VARIES) |
| TMH | TMH | TELEPHONE MANHOLE (SIZE VARIES) |
| CO | CO | WASTEWATER CLEANOUT |
| X | X | WIRE FENCE |
| // | // | WOOD FENCE |
| | | CHAIN LINK FENCE |
| | | CURB & GUTTER |
| | | EDGE OF PAVEMENT |
| | | CONCRETE SIDEWALKS |
| | | WALL |
| | | LIMITS OF CONSTRUCTION |
| 678 | 678 | CONTOUR |
| SS | SS | STORMSEWER LINE |
| W | W | WATER LINE |
| | FL | FIRE LINE |
| WW | WW | WASTEWATER LINE |
| G | G | GAS LINE |
| UE | UE | UNDERGROUND ELECTRIC LINE |
| OE | OE | OVERHEAD ELECTRIC LINE |
| OE | UT | UNDERGROUND TELEPHONE LINE |
| UC | UC | UNDERGROUND CABLE AND INTERNET |
| U-COMM | U-COMM | UNDERGROUND TELECOMMUNICATIONS |
| | FFE | FINISH FLOOR ELEVATION |
| 1111 | | TREE TO BE SAVED |
| 1111 | | HERITAGE / MATURE TREE |

| PROFILE LEGEND | PROFILE SCALE |
|---|---|
| EXISTING GRADE<br>PROPOSED GRADE<br>PROPOSED PIPE | 1" = 30' HORIZONTAL<br>1" = 3' VERTICAL |
| ELEVATION EXISTING GRADE 658.51 / FL ELEVATION PROPOSED PIPE 658.34 | |

RESTRAIN ALL JOINTS.

NOTES:

1. CONTRACTOR SHALL REPAIR/REPLACE EXISTING GRAVEL TRAIL HEAD AFTER CONSTRUCTION OF WATERLINE (IF DAMAGED DURING CONSTRUCTION).

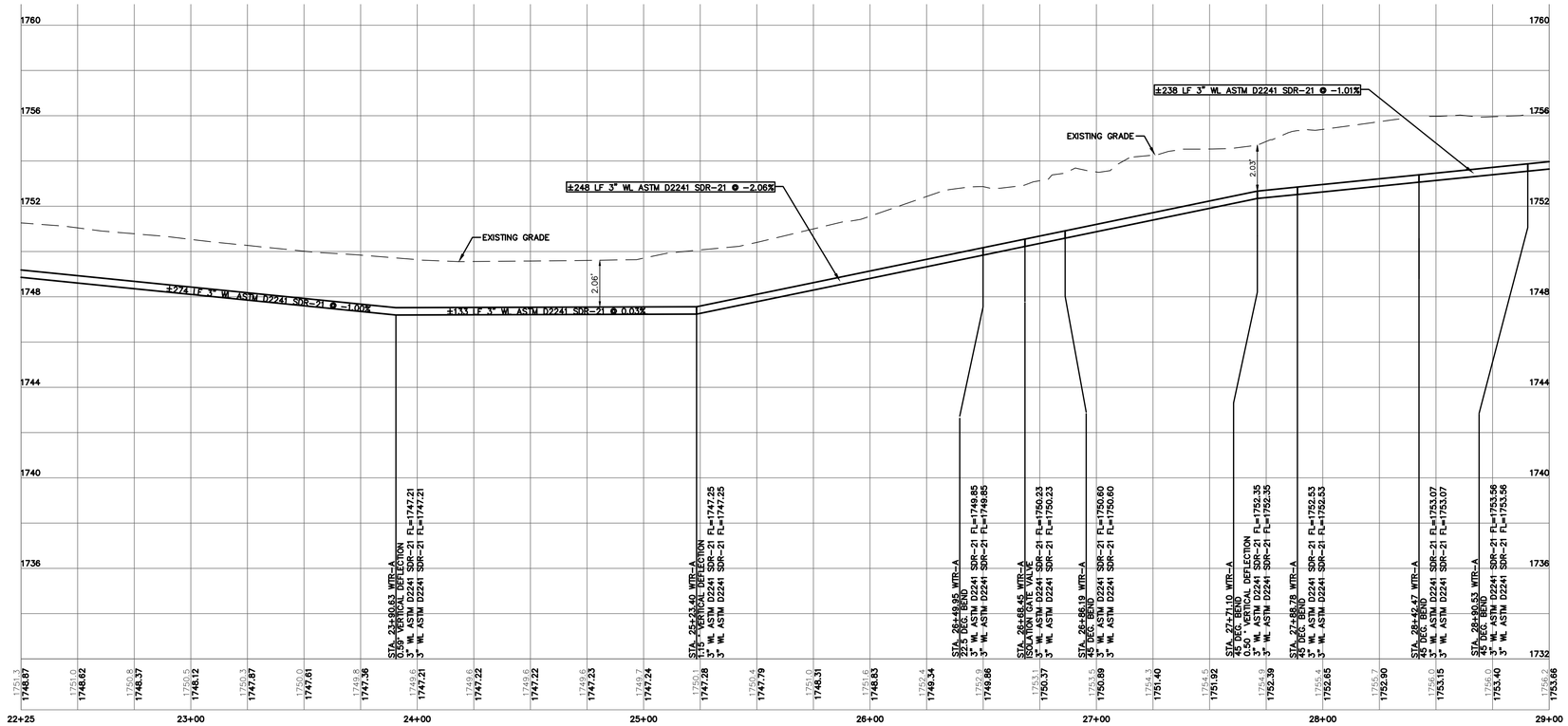



garza EMC
7708 Rialto Blvd., Suite 125
Austin, Texas 78735
Tel. (512) 298-3284 Fax (512) 298-2592
TBPE # F-14629

Garza EMC, LLC © Copyright 2021


FORD POWELL &CARSON
Architects & Planners, Inc.
711 Navarro, Suite 400
San Antonio, Texas 78205
210/226-1246
92706
Architecture
Planning
Preservation
Interior Design


TEXAS PARKS & WILDLIFE

JULIA L. MRNAK 113030 STATE OF TEXAS
04/09/2021

# SOUTH LLANO RIVER STATE PARK
## HEADQUARTERS BUILDING RENOVATION AND EXPANSION
PROJECT NUMBER: 134245

DATE: 04.09.2021
DESIGNED BY:
DRAWN BY:
REVIEWED BY:
REVISED:
REVISED:
REVISED:

CONSTRUCTION DOCUMENTS

SHEET TITLE
WATERLINE PLAN AND PROFILE C

SHEET NUMBER
C903

PATH: V:\101345\00011\Civil\CAD\101345011WTR-02.dwg

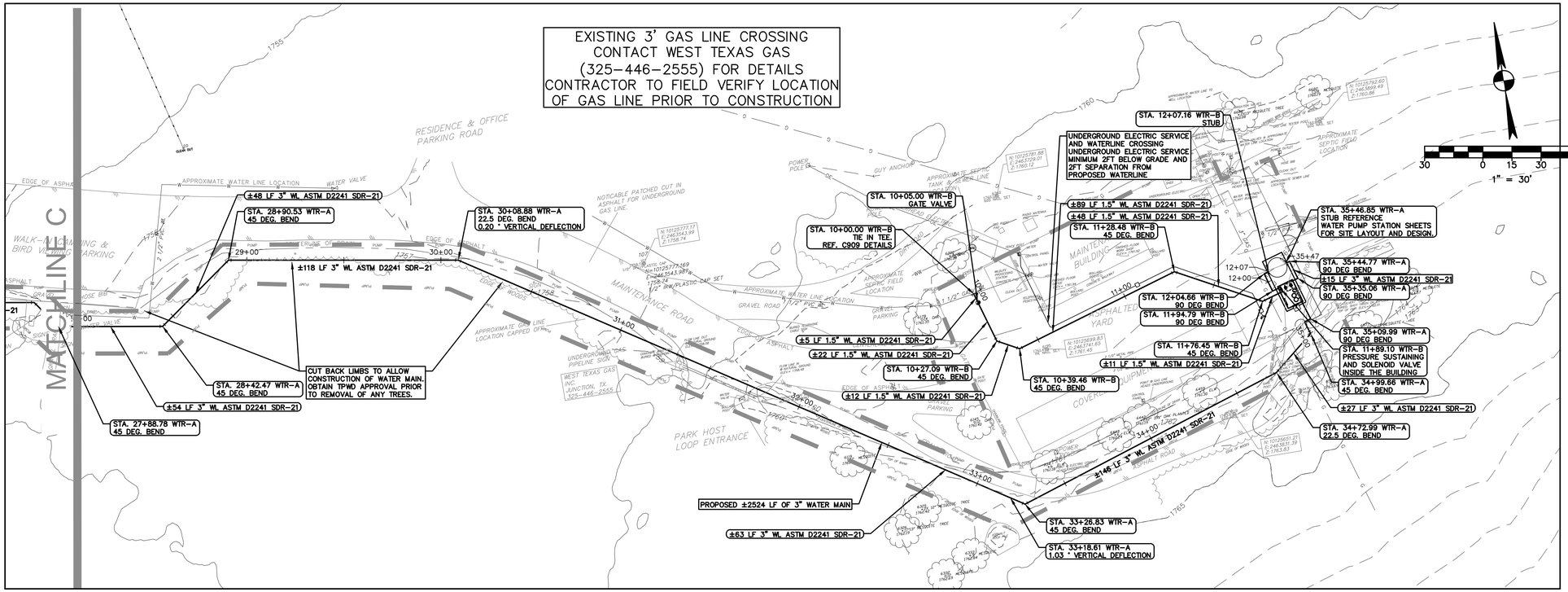


# WATERLINE ROUTING PLAN AND PROFILE D

SCALE: 1"=30'

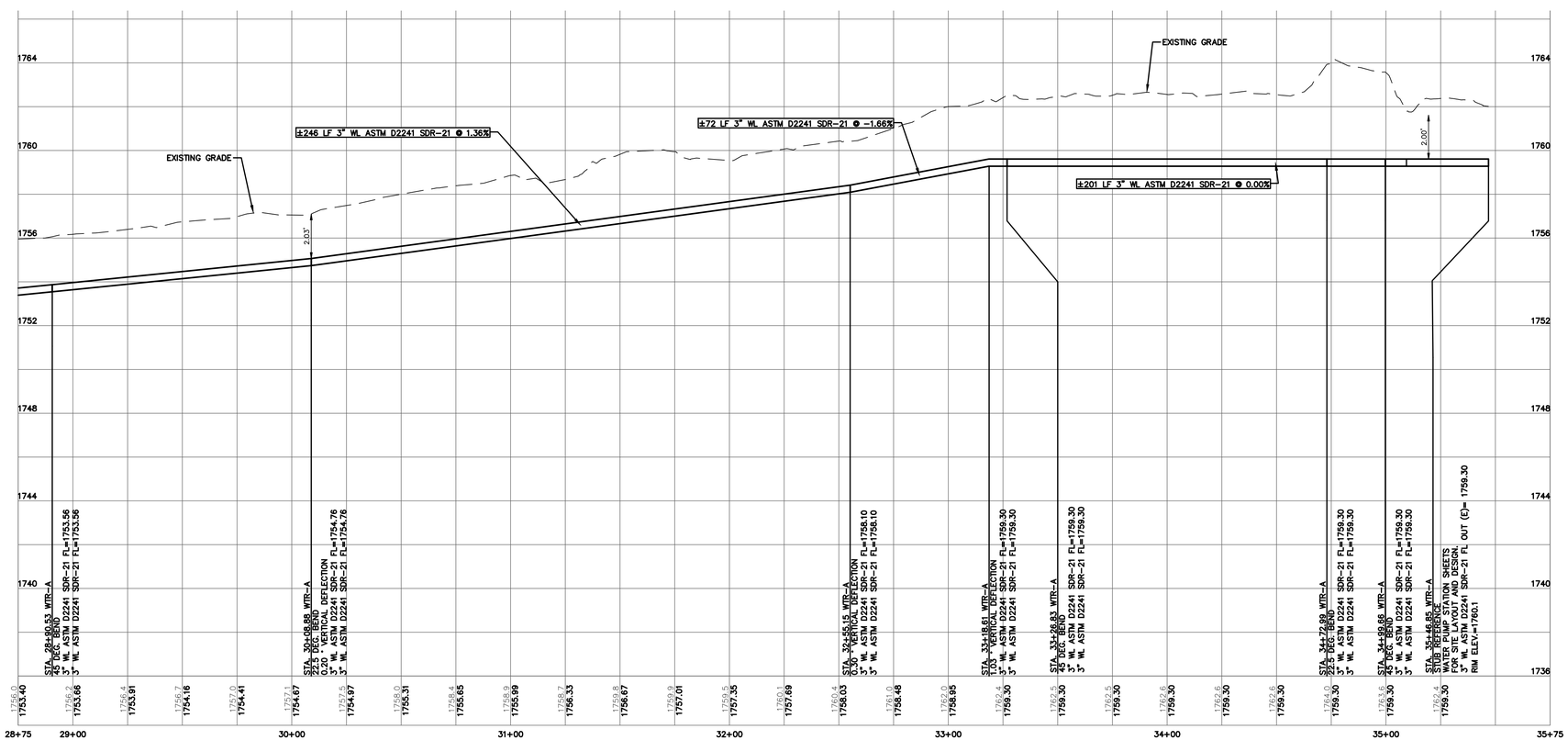


## LEGEND

| EXISTING | PROPOSED | DESCRIPTION |
|---|---|---|
| | | PROPERTY LINE / R.O.W. LINE |
| | | RECORD INFORMATION |
| | | LIGHT POLE |
| | | GROUND LIGHT |
| | | POWER POLE |
| | | DOWN GUY |
| WTRMKR | | WATER MANHOLE |
| | | WATER LINE MARKER |
| CMKR | | UNDERGROUND CABLE MARKER |
| GMKR | | UNDERGROUND GAS LINE MARKER |
| UGTM | | UNDERGROUND TELEPHONE MARKER |
| GRSR | | GAS RISER |
| TRSR | | TELEPHONE RISER |
| SPK | | SPRINKLER CONTROL BOX |
| | SW | SWITCH GEAR & PAD |
| | | TRANSFORMER (SIZE VARIES) |
| | | FIRE HYDRANT |
| | | WATER VALVE |
| | | WATER METER |
| | | WATER METER VAULT (SIZE VARIES) |
| | | CABLE TV RISER |
| | | ELECTRIC BOX |
| | | ELECTRIC METER |
| | | GAS METER |
| | | GAS VALVE |
| TCB | TCB | TRAFFIC CONTROL BOX |
| TSP | TSP | TRAFFIC SIGNAL POST |
| | | GRATE INLET |
| | | CURB INLET (SIZE VARIES) |
| | | GREASE TRAP (SIZE VARIES) |
| EMH | | ELECTRIC MANHOLE (SIZE VARIES) |
| WWMH | | WASTEWATER MANHOLE (SIZE VARIES) |
| SSMH | | STORMSEWER MANHOLE (SIZE VARIES) |
| TMH | TMH | TELEPHONE MANHOLE (SIZE VARIES) |
| CO | CO | WASTEWATER CLEANOUT |
| X | X | WIRE FENCE |
| // | // | WOOD FENCE |
| | | CHAIN LINK FENCE |
| | | CURB & GUTTER |
| | | EDGE OF PAVEMENT |
| | | CONCRETE SIDEWALKS |
| | | WALL |
| | | LIMITS OF CONSTRUCTION |
| 678 | 678 | CONTOUR |
| SS | SS | STORMSEWER LINE |
| W | W | WATER LINE |
| | | FIRE LINE |
| WW | WW | WASTEWATER LINE |
| G | G | GAS LINE |
| UE | UE | UNDERGROUND ELECTRIC LINE |
| OE | OE | OVERHEAD ELECTRIC LINE |
| UT | UT | UNDERGROUND TELEPHONE LINE |
| UC | UC | UNDERGROUND CABLE AND INTERNET |
| U-COMM | U-COMM | UNDERGROUND TELECOMMUNICATIONS |
| | FFE | FINISH FLOOR ELEVATION |
| 1717 | | TREE TO BE SAVED |
| 1747 | | HERITAGE / MATURE TREE |

| PROFILE LEGEND | PROFILE SCALE |
|---|---|
| EXISTING GRADE<br>PROPOSED GRADE<br>PROPOSED PIPE | 1" = 30' HORIZONTAL<br>1" = 3' VERTICAL |
| ELEVATION: EXISTING GRADE 653.31<br>FL-ELEVATION: PROPOSED PIPE 658.34 | |

RESTRAIN ALL JOINTS.

NOTES:

1. CONTRACTOR SHALL REPAIR/REPLACE EXISTING GRAVEL TRAIL HEAD AFTER CONSTRUCTION OF WATERLINE (IF DAMAGED DURING CONSTRUCTION).

TEXAS PARKS & WILDLIFE

JULIA L. MRNAK 113030 LICENSED PROFESSIONAL ENGINEER 04/09/2021

SOUTH LLANO RIVER STATE PARK
HEADQUARTERS BUILDING RENOVATION AND EXPANSION
PROJECT NUMBER: 134245

DATE: 04.09.2021
DESIGNED BY:
DRAWN BY:
REVIEWED BY:
REVISED:
REVISED:
REVISED:

CONSTRUCTION DOCUMENTS

SHEET TITLE
WATERLINE PLAN AND PROFILE D

SHEET NUMBER
C904

garza EMC
7708 Rialto Blvd., Suite 125
Austin, Texas 78735
Tel. (512) 298-3284 Fax (512) 298-2592
TBPE # F-14629
Garza EMC, LLC © Copyright 2021

FORD POWELL & CARSON
Architects & Planners, Inc.
Architecture
Planning
Preservation
Interior Design
711 Navarro, Suite 400
San Antonio, Texas 78205
210/226-1246
92706

PATH: V:\101345\00011\Civil\CAD\101345011WTR-04.dwg

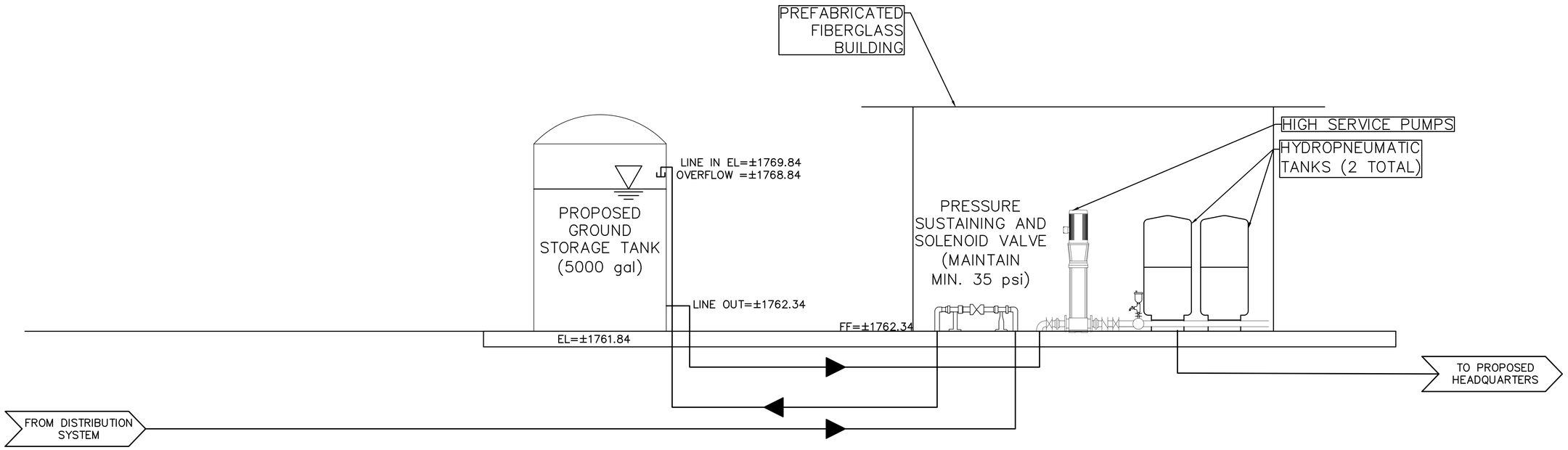


TEXAS PARKS & WILDLIFE

JULIA L. MRNAK 113030
04/09/2021

# SOUTH LLANO RIVER STATE PARK
## HEADQUARTERS BUILDING RENOVATION AND EXPANSION
PROJECT NUMBER: 134245

DATE: 04.09.2021
DESIGNED BY:
DRAWN BY:
REVIEWED BY:
REVISED:
REVISED:
REVISED:

CONSTRUCTION DOCUMENTS

SHEET TITLE
PROCESS DIAGRAM

SHEET NUMBER
C905

garza EMC
7708 Rialto Blvd., Suite 125
Austin, Texas 78735
Tel. (512) 298-3284 Fax (512) 298-2592
TBPE # F-14629
Garza EMC, LLC © Copyright 2021

FORD POWELL &CARSON Architects & Planners, Inc.
Architecture
Planning
Preservation
Interior Design
711 Navarro, Suite 400
San Antonio, Texas 78205
210/226-1246
92706

PATH: V:\101345\00011\Civil\CAD\PUMP STATION\13425011PD.dwg

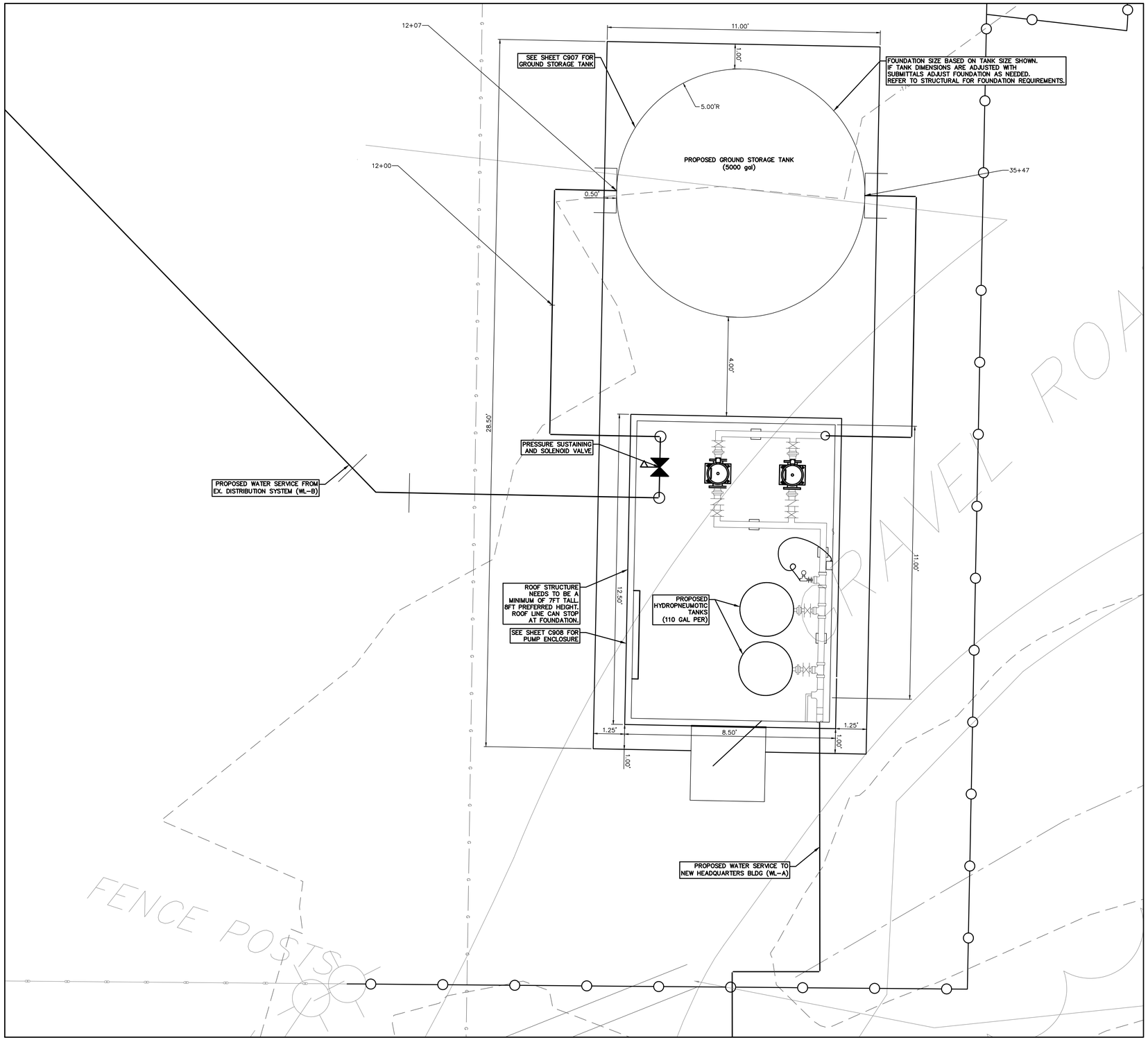


TEXAS PARKS & WILDLIFE

JULIA L. MRNAK 113030
04/09/2021

# SOUTH LLANO RIVER STATE PARK
## HEADQUARTERS BUILDING RENOVATION AND EXPANSION
PROJECT NUMBER: 134245

DATE: 04.09.2021
DESIGNED BY:
DRAWN BY:
REVIEWED BY:
REVISED:
REVISED:
REVISED:

CONSTRUCTION DOCUMENTS

SHEET TITLE
PUMP STATION PLAN VIEW

SHEET NUMBER
C906

garza EMC
7708 Rialto Blvd., Suite 125
Austin, Texas 78735
Tel. (512) 298-3284 Fax (512) 298-2592
TBPE # F-14629
Garza EMC, LLC © Copyright 2021

FORD POWELL &CARSON Architects & Planners, Inc.
Architecture
Planning
Preservation
Interior Design
711 Navarro, Suite 400
San Antonio, Texas 78205
210/226-1246
92706

PATH: V:\101345\00011\Civil\CAD\PUMP STATION\13425011MEC.dwg

## TEXAS COMMISSION ON ENVIRONMENTAL QUALITY HYDROPNEUMATIC PRESSURE TANK GENERAL CONSTRUCTION NOTES

1. THESE HYDROPNEUMATIC PRESSURE FACILITIES MUST BE CONSTRUCTED IN ACCORDANCE WITH THE TEXAS COMMISSION ON ENVIRONMENTAL QUALITY (TCEQ) RULES AND REGULATIONS FOR PUBLIC WATER SYSTEMS 30 TEXAS ADMINISTRATIVE CODE (TAC) CHAPTER 290 SUBCHAPTER D. WHEN CONFLICTS ARE NOTED WITH LOCAL STANDARDS, THE MORE STRINGENT REQUIREMENT SHALL BE APPLIED. AT A MINIMUM, CONSTRUCTION FOR PUBLIC WATER SYSTEMS MUST ALWAYS MEET TCEQ'S "RULES AND REGULATIONS FOR PUBLIC WATER SYSTEMS."

2. ALL HYDROPNEUMATIC TANKS MUST BE LOCATED WHOLLY ABOVE GRADE AND MUST BE OF STEEL CONSTRUCTION WITH WELDED SEAMS EXCEPT AS PROVIDING IN NOTE № 12 OF THESE CONSTRUCTION NOTES.

3. METAL THICKNESS FOR PRESSURE TANKS SHALL BE SUFFICIENT TO WITHSTAND THE HIGHEST EXPECTED WORKING PRESSURES WITH A FOUR TO ONE FACTOR OF SAFETY. TANKS FOR 1000 GALLON CAPACITY OR LARGER MUST MEET THE STANDARDS OF THE AMERICAN SOCIETY OF MECHANICAL ENGINEERS (ASME) SECTION VIII, DIVISION 1 CODES AND CONSTRUCTION REGULATIONS AND MUST HAVE AN ACCESS PORT OF PERIODIC INSPECTIONS. AN ASME NAME PLATE MUST BE PERMANENTLY ATTACHED TO THOSE TANKS. TANKS INSTALLED BEFORE JULY 1, 1988, ARE EXEMPT FROM THE ASME CODING REQUIREMENT, BUT ALL NEW INSTALLATIONS MUST MEET THIS REGULATION. EXEMPT TANKS CAN BE RELOCATED WITHIN A SYSTEM, BUT CANNOT BE RELOCATED TO ANOTHER SYSTEM.

4. ALL PRESSURE TANKS SHALL BE PROVIDED WITH A PRESSURE RELEASE DEVICE AND AN EASILY READABLE PRESSURE GAUGE.

5. FACILITIES SHALL BE PROVIDED FOR MAINTAINING THE AIR-WATER-VOLUME AT THE DESIGN WATER LEVEL AND WORKING PRESSURE. AIR INJECTION LINES MUST BE EQUIPPED WITH FILTERS OR OTHER DEVICES TO PREVENT COMPRESSOR LUBRICANT AND OTHER CONTAMINANTS FROM ENTERING THE PRESSURE TANK. A DEVICE TO READILY DETERMINE AIR-WATER-VOLUME MUST BE PROVIDED FOR ALL TANKS GREATER THAN 1000 GALLON CAPACITY. GALVANIZED TANKS WHICH ARE NOT PROVIDED WITH THE NECESSARY FITTINGS AND WERE INSTALLED BEFORE JULY 1, 1988, SHALL BE EXEMPT FROM THIS REQUIREMENT.

6. HYDROPNEUMATIC PRESSURE TANKS SHALL BE PAINTED, DISINFECTED AND MAINTAINED IN STRICT ACCORDANCE WITH CURRENT AMERICAN WATER WORKS ASSOCIATION (AWWA) STANDARDS. PROTECTIVE PAINT OR COATING SHALL BE APPLIED TO THE INSIDE PORTION OF ANY PRESSURE TANK. HOWEVER, NO TEMPORARY COATING, WAX, GREASE COATING OR COATING MATERIALS CONTAINING LEAD WILL BE ALLOWED. NO OTHER COATING WILL BE ALLOWED WHICH ARE NOT APPROVED FOR USE (AS A CONTACT SURFACE WITH POTABLE WATER BY THE UNITED SATES ENVIRONMENTAL PROTECTION AGENCY (EPA), NSF INTERNATIONAL, THE UNITED STATES FOOD AND DRUG ADMINISTRATION (FDA). ALL NEWLY INSTALLED COATINGS MUST CONFORM TO ANSI/NSF INTERNATIONAL STANDARD 61 AND MUST BE CERTIFIED BY AN ORGANIZATION ACCREDITED BY ANSI.

7. NO PRESSURE TANK THAT HAS BEEN USED TO STORE ANY MATERIAL OTHER THAN POTABLE WATER MAY BE USED IN A PUBLIC WATER SYSTEM. A LETTER FROM THE PREVIOUS OWNER OR OWNERS MUST BE PROVIDED.
8. PRESSURE TANK INSTALLATIONS SHOULD BE EQUIPPED WITH SLOW CLOSING VALVES AND TIME DELAY PUMP CONTROLS TO ELIMINATE WATER HAMMER TO REDUCE THE CHANCE OF TANK FAILURE.

9. ASSOCIATED APPURTENANCES INCLUDING VALVES PIPES AND FITTINGS CONNECTED TO PRESSURE TANKS MUST CONFORM TO ANSI/NSF INTERNATIONAL STANDARD 61 AND SHALL BE THOROUGHLY TIGHT AGAINST LEAKAGE. PURSUANT TO 30 TAC §290.44(B)(1), THE MAXIMUM ALLOWABLE LEAD CONTENT OF PIPES, PIPE FITTINGS, PLUMBING FITTINGS, AND FIXTURES IS 0.25 PERCENT.
10. DISINFECTION OF WATER STORAGE FACILITIES SHALL BE IN STRICT ACCORDANCE WITH CURRENT AWWA STANDARD C652-11 OR MOST RECENT.
11. DECHLORINATION OF DISINFECTING WATER SHALL BE IN STRICT ACCORDANCE WITH CURRENT AWWA STANDARD C655-09 OR MOST RECENT.
12. WHERE SEAMLESS FIBERGLASS TANKS ARE UTILIZED, THEY SHALL NOT EXCEED 300 GALLONS IN CAPACITY.

13. NO MORE THAN THREE PRESSURE TANKS SHALL BE INSTALLED AT ANY ONE SITE WITHOUT THE PRIOR APPROVAL OF THE EXECUTIVE DIRECTOR.

14. ALL POTABLE WATER STORAGE TANKS AND PRESSURE MAINTENANCE FACILITIES MUST BE ENCLOSED BY AN INTRUDER RESISTANT FENCE WITH LOCKABLE GATES. PEDESTAL TYPE ELEVATED STORAGE TANKS WITH LOCKABLE DOORS AND WITHOUT EXTERNAL LADDERS ARE EXEMPT FROM THIS REQUIREMENT. THE GATES AND DOORS MUST BE KEPT LOCKED WHENEVER THE FACILITY IS UNATTENDED.

## TEXAS COMMISSION ON ENVIRONMENTAL QUALITY WATER STORAGE TANK GENERAL CONSTRUCTION NOTES

1. THE WATER STORAGE TANK MUST BE CONSTRUCTED IN ACCORDANCE WITH THE CURRENT TEXAS COMMISSION ON ENVIRONMENTAL QUALITY (TCEQ) RULES AND REGULATIONS FOR PUBLIC WATER SYSTEMS 30 TEXAS ADMINISTRATIVE CODE (TAC) CHAPTER 290 SUBCHAPTER D. WHEN CONFLICTS ARE NOTED WITH LOCAL STANDARDS, THE MORE STRINGENT REQUIREMENT SHALL BE APPLIED. AT A MINIMUM, CONSTRUCTION FOR PUBLIC WATER SYSTEMS MUST ALWAYS MEET TCEQ'S "RULES AND REGULATIONS FOR PUBLIC WATER SYSTEMS."

2. ALL FACILITIES FOR POTABLE WATER STORAGE SHALL BE COVERED AND DESIGNED, FABRICATED, ERECTED, TESTED AND DISINFECTED IN STRICT ACCORDANCE WITH CURRENT AMERICAN WATER WORKS ASSOCIATION (AWWA) STANDARDS AND SHALL BE PROVIDED WITH THE MINIMUM NUMBER, SIZE AND TYPE OF ROOF VENTS, MAN WAYS, DRAINS, SAMPLE CONNECTIONS, ACCESS LADDERS, OVERFLOWS, LIQUID LEVEL INDICATORS ON-SITE, AND OTHER APPURTENANCES AS SPECIFIED IN THESE RULES.
3. DISINFECTION OF WATER STORAGE FACILITIES SHALL BE IN STRICT ACCORDANCE WITH CURRENT AWWA STANDARD C652-11 OR MOST RECENT.
4. DECHLORINATION OF DISINFECTING WATER SHALL BE IN STRICT ACCORDANCE WITH CURRENT AWWA STANDARD C655-09 OR MOST RECENT.
5. BOLTED TANKS SHALL BE DESIGNED, FABRICATED, ERECTED AND TESTED IN STRICT ACCORDANCE WITH CURRENT AWWA STANDARD D103. WELDED TANKS SHALL BE DESIGNED, FABRICATED, ERECTED AND TESTED IN STRICT ACCORDANCE WITH CURRENT AWWA STANDARD D100. THE ROOF OF ALL METAL TANKS SHALL BE DESIGNED AND ERECTED SO THAT NO WATER PONDS AT ANY POINT ON THE ROOF AND, IN ADDITION, NO AREA OF THE ROOF SHALL HAVE A SLOPE OF LESS THAN 0.75 INCH PER FOOT. CONCRETE TANK ROOFS SHALL BE CONSTRUCTED IN STRICT COMPLIANCE WITH THEIR RESPECTIVE AWWA STANDARD.
6. ROOF VENTS SHALL BE INSTALLED IN STRICT ACCORDANCE WITH CURRENT AWWA STANDARDS AND SHALL BE EQUIPPED WITH APPROVED SCREENS TO PREVENT ENTRY OF ANIMALS, BIRDS, INSECTS AND HEAVY AIR CONTAMINANTS. SCREENS SHALL BE FABRICATED OF CORROSION RESISTANT MATERIAL AND SHALL BE 16 MESH OR FINER. SCREENS SHALL BE SECURELY CLAMPED IN PLACE WITH STAINLESS OR GALVANIZED BANDS OR WIRES AND SHALL BE DESIGNED TO WITHSTAND WINDS OF NOT LESS THAN TANK DESIGN CRITERIA (UNLESS SPECIFIED OTHERWISE BY THE ENGINEER).
7. ALL ROOF OPENINGS SHALL BE DESIGNED IN ACCORDANCE WITH CURRENT AWWA STANDARDS. IF AN ALTERNATE 30 INCH DIAMETER ACCESS OPENING IS NOT PROVIDED IN A STORAGE TANK, THE PRIMARY ROOF ACCESS OPENING SHALL NOT BE LESS THAN 30 INCHES IN DIAMETER. OTHER ROOF OPENINGS REQUIRED ONLY FOR VENTILATING PURPOSES DURING CLEANING, REPAIRING OR PAINTING OPERATIONS SHALL BE NOT LESS THAN 24 INCHES IN DIAMETER OR AS SPECIFIED BY THE LICENSED PROFESSIONAL ENGINEER. AN EXISTING TANK WITHOUT A 30-INCH IN DIAMETER ACCESS OPENING MUST BE MODIFIED TO MEET THIS REQUIREMENT WHEN MAJOR REPAIR OR MAINTENANCE IS PERFORMED ON THE TANK. EACH ACCESS OPENING SHALL HAVE A RAISED CURBING AT LEAST FOUR INCHES IN HEIGHT WITH A LOCKABLE COVER THAT OVERLAPS THE CURBING AT LEAST TWO INCHES IN A DOWNWARD DIRECTION. WHERE NECESSARY, A GASKET SHALL BE USED TO MAKE A POSITIVE SEAL WHEN THE HATCH IS CLOSED. ALL HATCHES SHALL REMAIN LOCKED EXCEPT DURING INSPECTIONS AND MAINTENANCE.
8. OVERFLOWS SHALL BE DESIGNED IN STRICT ACCORDANCE WITH CURRENT AWWA STANDARDS AND SHALL TERMINATE WITH A GRAVITY-HINGED AND WEIGHTED COVER, AN ELASTOMERIC DUCKBILL VALVE, OR OTHER APPROVED DEVICE TO PREVENT THE ENTRANCE OF INSECTS AND OTHER NUISANCES. THE COVER SHALL FIT TIGHTLY WITH NO GAP OVER 1/16 INCHES. IF THE OVERFLOW TERMINATES AT ANY POINT OTHER THAN THE GROUND LEVEL, IT SHALL BE LOCATED NEAR ENOUGH AND AT A POSITION ACCESSIBLE FROM A LADDER OR THE BALCONY FOR INSPECTION PURPOSES. THE OVERFLOW(S) SHALL BE SIZED TO HANDLE THE MAXIMUM POSSIBLE FILL RATE WITHOUT EXCEEDING THE CAPACITY OF THE OVERFLOW(S). THE DISCHARGE OPENING OF THE OVERFLOW(S) SHALL BE ABOVE THE SURFACE OF THE GROUND AND SHALL NOT BE SUBJECT TO SUBMERGENCE.
9. ALL CLEARWELLS AND WATER STORAGE TANKS SHALL HAVE A LIQUID LEVEL INDICATOR LOCATED AT THE TANK SITE. THE INDICATOR CAN BE A FLOAT WITH A MOVING TARGET, AN ULTRASONIC LEVEL INDICATOR, OR A PRESSURE GAUGE CALIBRATED IN FEET OF WATER. IF AN ELEVATED TANK OR STANDPIPE HAS A FLOAT WITH MOVING TARGET INDICATOR, IT MUST ALSO HAVE A PRESSURE INDICATOR LOCATED AT GROUND LEVEL. PRESSURE GAUGES MUST NOT BE LESS THAN THREE INCHES IN DIAMETER AND CALIBRATED AT NOT MORE THAN TWO-FOOT INTERVALS. REMOTE READING GAUGES AT THE OWNER'S TREATMENT PLANT OR PUMPING STATION WILL NOT ELIMINATE THE REQUIREMENT FOR A GAUGE AT THE TANK SITE UNLESS THE TANK IS LOCATED AT THE PLANT OR STATION.
10. INLET AND OUTLET CONNECTIONS SHALL BE LOCATED SO AS TO PREVENT SHORT CIRCUITING OR STAGNATION OF WATER. CLEARWELLS USED FOR DISINFECTANT CONTACT TIME SHALL BE APPROPRIATELY BAFFLED.
11. CLEARWELLS AND POTABLE WATER STORAGE TANKS SHALL BE THOROUGHLY TIGHT AGAINST LEAKAGE, SHALL BE LOCATED ABOVE THE GROUND WATER TABLE AND SHALL HAVE NO WALLS IN COMMON WITH ANY OTHER PLANT UNITS CONTAINING WATER IN THE PROCESS OF TREATMENT. ALL ASSOCIATED APPURTENANCES INCLUDING VALVES, PIPES AND FITTINGS SHALL BE TIGHT AGAINST LEAKAGE.
12. EACH CLEARWELL OR POTABLE WATER STORAGE TANK SHALL BE PROVIDED WITH A MEANS OF REMOVING ACCUMULATED SILT AND DEPOSITS AT ALL LOW POINTS IN THE BOTTOM OF THE TANK. DRAINS SHALL NOT BE CONNECTED TO ANY WASTE OR SEWAGE DISPOSAL SYSTEM AND SHALL BE CONSTRUCTED SO THAT THEY ARE NOT A POTENTIAL AGENT IN THE CONTAMINATION OF THE STORED WATER.
13. ALL CLEAR WELLS, GROUND STORAGE TANKS, STANDPIPES, AND ELEVATED TANKS SHALL BE PAINTED, DISINFECTED, AND MAINTAINED IN STRICT ACCORDANCE WITH CURRENT AWWA STANDARDS. HOWEVER, NO TEMPORARY COATINGS, WAX GREASE COATINGS, OR COATING MATERIALS CONTAINING LEAD WILL BE ALLOWED. NO OTHER COATINGS WILL BE ALLOWED WHICH ARE NOT APPROVED FOR USE (AS A CONTACT SURFACE WITH POTABLE WATER) BY THE UNITED STATES ENVIRONMENTAL PROTECTION AGENCY (EPA), NSF INTERNATIONAL, OR THE UNITED STATES FOOD AND DRUG ADMINISTRATION (FDA). ALL NEWLY INSTALLED COATINGS MUST CONFORM TO ANSI/NSF INTERNATIONAL STANDARD 61 AND MUST BE CERTIFIED BY AN ORGANIZATION ACCREDITED BY ANSI.
14. NO TANKS OR CONTAINERS SHALL BE USED TO STORE POTABLE WATER THAT HAS PREVIOUSLY BEEN USED FOR ANY NON-POTABLE PURPOSE. WHERE A USED TANK IS PROPOSED FOR USE, A LETTER FROM THE PREVIOUS OWNER OR OWNERS MUST BE SUBMITTED TO THE COMMISSION WHICH STATES THE USE OF THE TANK.
15. ACCESS MANWAYS IN THE RISER PIPE, SHELL AREA, ACCESS TUBE, BOWL AREA OR ANY OTHER LOCATION OPENING DIRECTLY INTO THE WATER COMPARTMENT SHALL BE LOCATED IN STRICT ACCORDANCE WITH CURRENT AWWA STANDARDS. THESE OPENINGS SHALL NOT BE LESS THAN 24 INCHES IN DIAMETER. HOWEVER, IN THE CASE OF A RISER PIPE OR ACCESS TUBE OF 36 INCHES IN DIAMETER OR SMALLER, THE ACCESS MANWAY MAY BE 18 INCHES TIMES 24 INCHES WITH THE VERTICAL DIMENSION NOT LESS THAN 24 INCHES. THE PRIMARY ACCESS MANWAY IN THE LOWER RING OR SECTION OF A GROUND STORAGE TANK SHALL BE NOT LESS THAN 30 INCHES IN DIAMETER. WHERE NECESSARY, FOR ANY ACCESS MANWAY WHICH ALLOWS DIRECT ACCESS TO THE WATER COMPARTMENT, A GASKET SHALL BE USED TO MAKE A POSITIVE SEAL WHEN THE ACCESS MANWAY IS CLOSED.
16. SERVICE PUMP INSTALLATION TAKING SUCTION FROM STORAGE TANKS SHALL PROVIDE AUTOMATIC LOW WATER LEVEL CUTOFF DEVICES TO PREVENT DAMAGE TO THE PUMPS. THE SERVICE PUMP CIRCUITRY SHALL ALSO RESUME PUMPING AUTOMATICALLY ONCE THE MINIMUM WATER LEVEL IS REACHED IN THE TANK.

17. PURSUANT TO 30 TAC §290.44(B)(1), THE MAXIMUM ALLOWABLE LEAD CONTENT OF PIPES, PIPE FITTINGS, PLUMBING FITTINGS, AND FIXTURES IS 0.25 PERCENT.

## TCEQ WATER DISTRIBUTION SYSTEM GENERAL CONSTRUCTION NOTES

1. THIS WATER DISTRIBUTION SYSTEM MUST BE CONSTRUCTED IN ACCORDANCE WITH THE CURRENT TEXAS COMMISSION ON ENVIRONMENTAL QUALITY (TCEQ) RULES AND REGULATIONS FOR PUBLIC WATER SYSTEMS 30 TEXAS ADMINISTRATIVE CODE (TAC) CHAPTER 290 SUBCHAPTER D. WHEN CONFLICTS ARE NOTED WITH LOCAL STANDARDS, THE MORE STRINGENT REQUIREMENT SHALL BE APPLIED. AT A MINIMUM, CONSTRUCTION FOR PUBLIC WATER SYSTEMS MUST ALWAYS MEET TCEQ'S "RULES AND REGULATIONS FOR PUBLIC WATER SYSTEMS."

2. ALL NEWLY INSTALLED PIPES AND RELATED PRODUCTS MUST CONFORM TO AMERICAN NATIONAL STANDARDS INSTITUTE (ANSI)/NSF INTERNATIONAL STANDARD 61 AND MUST BE CERTIFIED BY AN ORGANIZATION ACCREDITED BY ANSI [§290.44(A)(1)].

3. PLASTIC PIPE FOR USE IN PUBLIC WATER SYSTEMS MUST BEAR THE NSF INTERNATIONAL SEAL OF APPROVAL (NSF-PW) AND HAVE AN ASTM DESIGN PRESSURE RATING OF AT LEAST 150 PSI OR A STANDARD DIMENSION RATIO OF 26 OR LESS [§290.44(A)(2)].

4. NO PIPE WHICH HAS BEEN USED FOR ANY PURPOSE OTHER THAN THE CONVEYANCE OF DRINKING WATER SHALL BE ACCEPTED OR RELOCATED FOR USE IN ANY PUBLIC DRINKING WATER SUPPLY [§290.44(A)(3)].

5. ALL WATER LINE CROSSINGS OF WASTEWATER MAINS SHALL BE PERPENDICULAR [§290.44(E)(4)(B)].

6. WATER TRANSMISSION AND DISTRIBUTION LINES SHALL BE INSTALLED IN ACCORDANCE WITH THE MANUFACTURER'S INSTRUCTIONS. HOWEVER, THE TOP OF THE WATER LINE MUST BE LOCATED BELOW THE FROST LINE AND IN NO CASE SHALL THE TOP OF THE WATER LINE BE LESS THAN 24 INCHES BELOW GROUND SURFACE [§290.44(A)(4)].

7. THE MAXIMUM ALLOWABLE LEAD CONTENT OF PIPES, PIPE FITTINGS, PLUMBING FITTINGS, AND FIXTURES IS 0.25 PERCENT [§290.44(B)].

8. THE CONTRACTOR SHALL INSTALL APPROPRIATE AIR RELEASE DEVICES WITH VENT OPENINGS TO THE ATMOSPHERE COVERED WITH 16-MESH OR FINER, CORROSION RESISTANT SCREENING MATERIAL OR AN ACCEPTABLE EQUIVALENT [§290.44(D)(1)].

9. THE CONTRACTOR SHALL NOT PLACE THE PIPE IN WATER OR WHERE IT CAN BE FLOODED WITH WATER OR SEWAGE DURING ITS STORAGE OR INSTALLATION [§290.44(F)(1)].

10. WHEN WATERLINES ARE LAID UNDER ANY FLOWING OR INTERMITTENT STREAM OR SEMI-PERMANENT BODY OF WATER THE WATERLINE SHALL BE INSTALLED IN A SEPARATE WATERTIGHT PIPE ENCASEMENT. VALVES MUST BE PROVIDED ON EACH SIDE OF THE CROSSING WITH FACILITIES TO ALLOW THE UNDERWATER PORTION OF THE SYSTEM TO BE ISOLATED AND TESTED [§290.44(F)(2)].
11. PURSUANT TO 30 TAC §290.44(A)(5), THE HYDROSTATIC LEAKAGE RATE SHALL NOT EXCEED THE AMOUNT ALLOWED OR RECOMMENDED BY THE MOST CURRENT AWWA FORMULAS FOR PVC PIPE, CAST IRON AND DUCTILE IRON PIPE. INCLUDE THE FORMULAS IN THE NOTES ON THE PLANS.
   - O THE HYDROSTATIC LEAKAGE RATE FOR POLYVINYL CHLORIDE (PVC) PIPE AND APPURTENANCES SHALL NOT EXCEED THE AMOUNT ALLOWED OR RECOMMENDED BY FORMULAS IN AMERICA WATER WORKS ASSOCIATION (AWWA) C-605 AS REQUIRED IN 30 TAC §290.44(A)(5). PLEASE ENSURE THAT THE FORMULA FOR THIS CALCULATION IS CORRECT AND MOST CURRENT FORMULA IS IN USE;

$$Q = LD\sqrt{P}/148{,}000$$

WHERE:

- Q = THE QUANTITY OF MAKEUP WATER IN GALLONS PER HOUR,
- L = THE LENGTH OF THE PIPE SECTION BEING TESTED, IN FEET,
- D = THE NOMINAL DIAMETER OF THE PIPE IN INCHES, AND
- P = THE AVERAGE TEST PRESSURE DURING THE HYDROSTATIC TEST IN POUNDS PER SQUARE INCH (PSI).

   - O THE HYDROSTATIC LEAKAGE RATE FOR DUCTILE IRON (DI) PIPE AND APPURTENANCES SHALL NOT EXCEED THE AMOUNT ALLOWED OR RECOMMENDED BY FORMULAS IN AMERICA WATER WORKS ASSOCIATION (AWWA) C-600 AS REQUIRED IN 30 TAC §290.44(A)(5). PLEASE ENSURE THAT THE FORMULA FOR THIS CALCULATION IS CORRECT AND MOST CURRENT FORMULA IS IN USE;

$$L = SD\sqrt{P}/148{,}000$$

WHERE:

- L = THE QUANTITY OF MAKEUP WATER IN GALLONS PER HOUR,
- S = THE LENGTH OF THE PIPE SECTION BEING TESTED, IN FEET,
- D = THE NOMINAL DIAMETER OF THE PIPE IN INCHES, AND
- P = THE AVERAGE TEST PRESSURE DURING THE HYDROSTATIC TEST IN POUNDS PER SQUARE INCH (PSI).

12. THE CONTRACTOR SHALL MAINTAIN A MINIMUM SEPARATION DISTANCE IN ALL DIRECTIONS OF NINE FEET BETWEEN THE PROPOSED WATERLINE AND WASTEWATER COLLECTION FACILITIES INCLUDING MANHOLES. IF THIS DISTANCE CANNOT BE MAINTAINED, THE CONTRACTOR MUST IMMEDIATELY NOTIFY THE PROJECT ENGINEER FOR FURTHER DIRECTION. SEPARATION DISTANCES, INSTALLATION METHODS, AND MATERIALS UTILIZED MUST MEET §290.44(E)(1)-(4).

13. THE SEPARATION DISTANCE FROM A POTABLE WATERLINE TO A WASTEWATER MAIN OR LATERAL MANHOLE OR CLEANOUT SHALL BE A MINIMUM OF NINE FEET. WHERE THE NINE-FOOT SEPARATION DISTANCE CANNOT BE ACHIEVED, THE POTABLE WATERLINE SHALL BE ENCASED IN A JOINT OF AT LEAST 150 PSI PRESSURE CLASS PIPE AT LEAST 18 FEET LONG AND TWO NOMINAL SIZES LARGER THAN THE NEW CONVEYANCE. THE SPACE AROUND THE CARRIER PIPE SHALL BE SUPPORTED AT FIVE-FOOT INTERVALS WITH SPACERS OR BE FILLED TO THE SPRINGLINE WITH WASHED SAND. THE ENCASEMENT PIPE SHALL BE CENTERED ON THE CROSSING AND BOTH ENDS SEALED WITH CEMENT GROUT OR MANUFACTURED SEALANT [§290.44(E)(5)].
14. FIRE HYDRANTS SHALL NOT BE INSTALLED WITHIN NINE FEET VERTICALLY OR HORIZONTALLY OF ANY WASTEWATER LINE, WASTEWATER LATERAL, OR WASTEWATER SERVICE LINE REGARDLESS OF CONSTRUCTION [§290.44(E)(6)].

15. SUCTION MAINS TO PUMPING EQUIPMENT SHALL NOT CROSS WASTEWATER MAINS, WASTEWATER LATERALS, OR WASTEWATER SERVICE LINES. RAW WATER SUPPLY LINES SHALL NOT BE INSTALLED WITHIN FIVE FEET OF ANY TILE OR CONCRETE WASTEWATER MAIN, WASTEWATER LATERAL, OR WASTEWATER SERVICE LINE [§290.44(E)(7)].

16. WATERLINES SHALL NOT BE INSTALLED CLOSER THAN TEN FEET TO SEPTIC TANK DRAINFIELDS [§290.44(E)(8)].

17. THE CONTRACTOR SHALL DISINFECT THE NEW WATERLINES IN ACCORDANCE WITH AWWA STANDARD C- 651-14 OR MOST RECENT, THEN FLUSH AND SAMPLE THE LINES BEFORE BEING PLACED INTO SERVICE. SAMPLES SHALL BE COLLECTED FOR MICROBIOLOGICAL ANALYSIS TO CHECK THE EFFECTIVENESS OF THE DISINFECTION PROCEDURE WHICH SHALL BE REPEATED IF CONTAMINATION PERSISTS. A MINIMUM OF ONE SAMPLE FOR EACH 1,000 FEET OF COMPLETED WATERLINE WILL BE REQUIRED OR AT THE NEXT AVAILABLE SAMPLING POINT BEYOND 1,000 FEET AS DESIGNATED BY THE DESIGN ENGINEER [§290.44(F)(3)].

18. DECHLORINATION OF DISINFECTING WATER SHALL BE IN STRICT ACCORDANCE WITH CURRENT AWWA STANDARD C655-09 OR MOST RECENT.

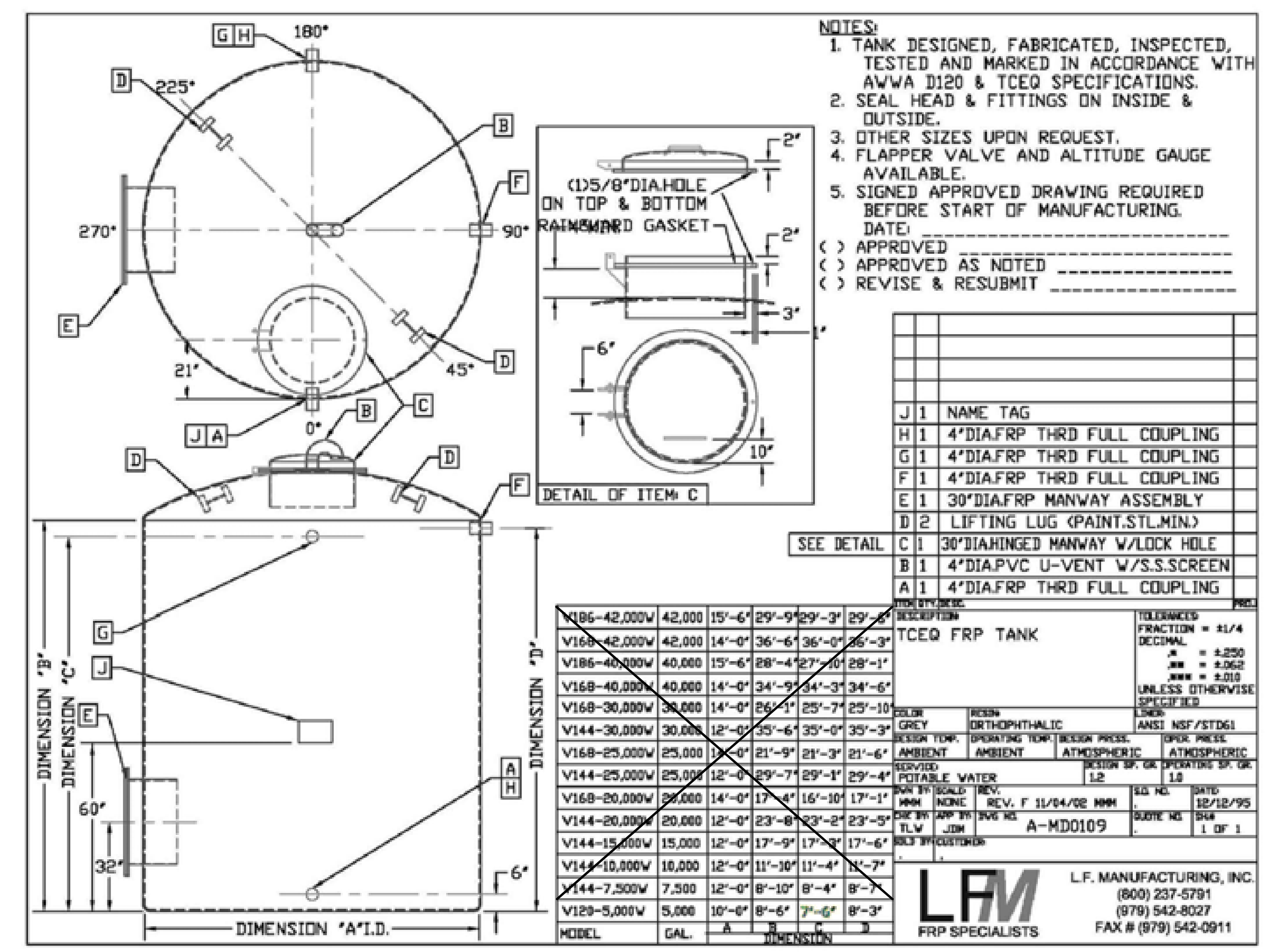


GROUND STORAGE TANK
N.T.S.

NOTE:
1. THIS PROJECT WILL USE THE V120–5,000W MODEL OR APPROVED EQUAL.
2. OVERFLOW SHALL BE PROVIDED WITH FLAPPER VALVE

| | |
|---|---|
| H | OVERFLOW LINE |
| G | FILL LINE |
| E | 30" MANWAY |
| C | 30" MANWAY |
| B | ROOF VENT |
| A | DISCHARGE LINE |

TEXAS PARKS & WILDLIFE

JULIA L. MRNAK 113030 LICENSED PROFESSIONAL ENGINEER 04/09/2021

SOUTH LLANO RIVER STATE PARK
HEADQUARTERS BUILDING RENOVATION AND EXPANSION
PROJECT NUMBER: 134245

DATE: 04.09.2021
DESIGNED BY:
DRAWN BY:
REVIEWED BY:
REVISED:
REVISED:
REVISED:


garza
7708 Rialto Blvd., Suite 125
Austin, Texas 78735
Tel. (512) 298-3284 Fax (512) 298-2592
TBPE # F-14629

Garza EMC, LLC © Copyright 2020


FORD POWELL &CARSON Architects & Planners, Inc.
Architecture Planning Preservation Interior Design
711 Navarro, Suite 400
San Antonio, Texas 78205
210/226-1246
92706


SHEET TITLE
PUMP STATION DETAILS

SHEET NUMBER
C907

CONSTRUCTION DOCUMENTS

PATH: V:\101345\00011\Civil\CAD\PUMP STATION\134250111DTL.dwg

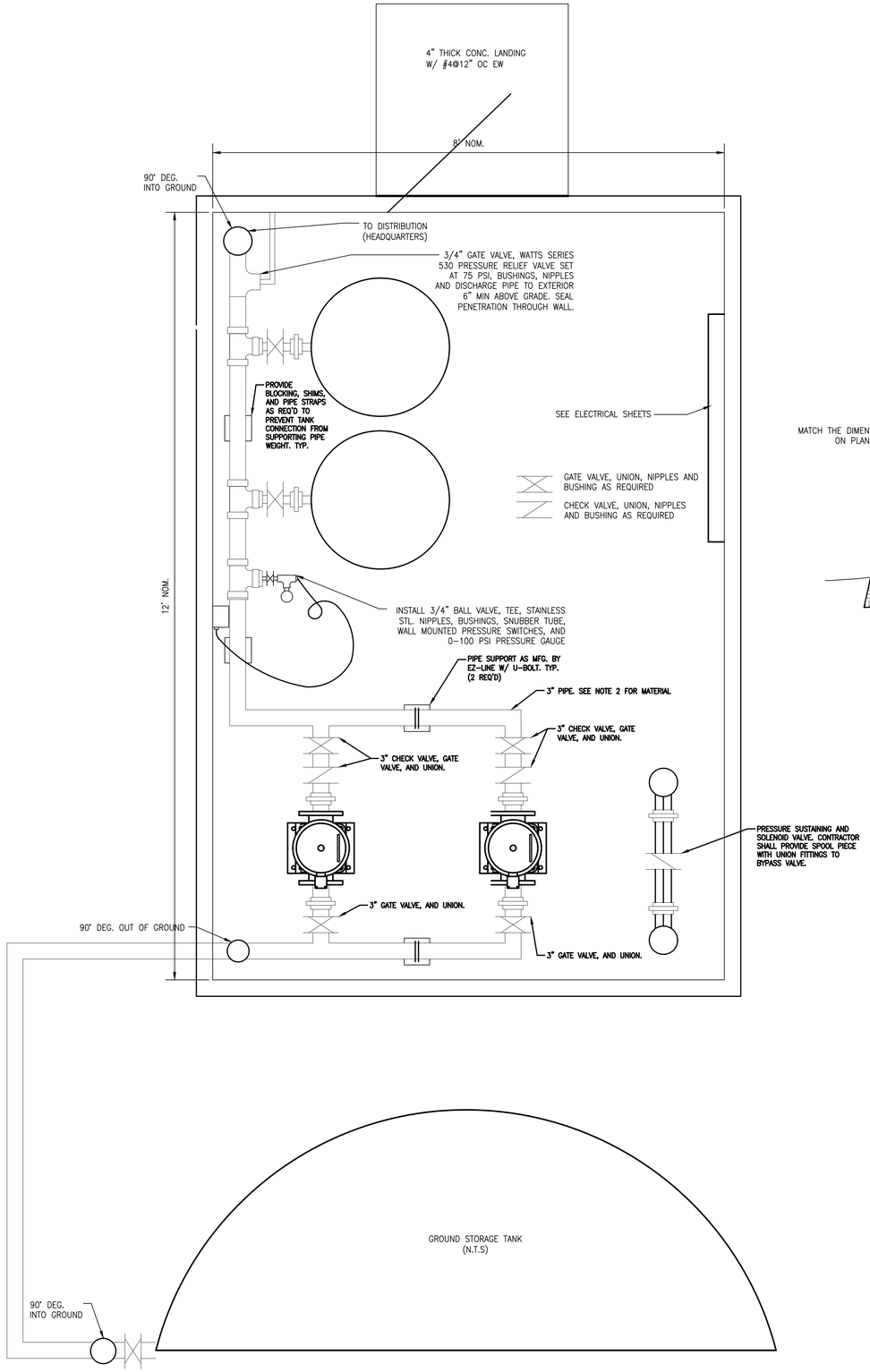


1 PLAN – PUMP BUILDING

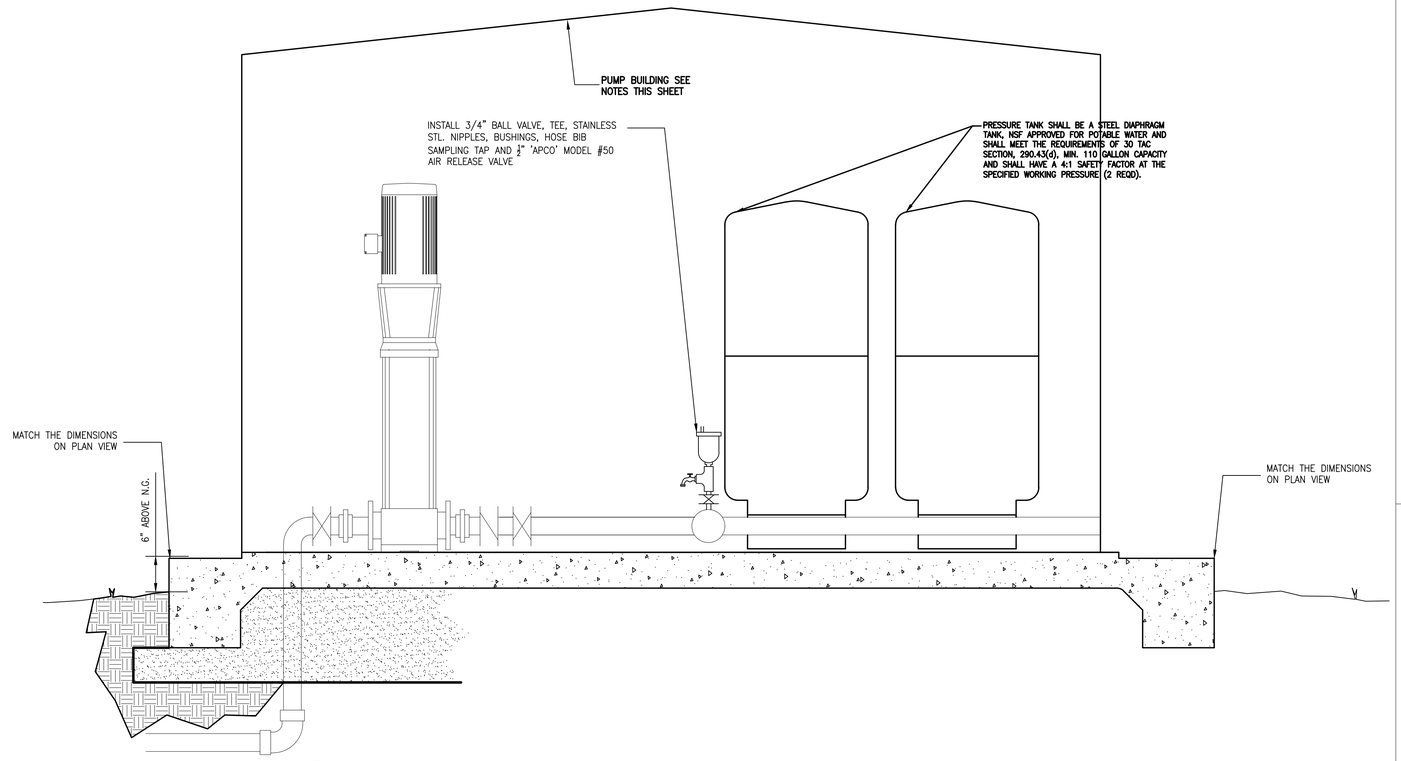


2 SECTION – PUMP BUILDING

N.T.S.

REF. STRUCTURAL PLANS FOR PUMP STATION SLAB DESIGN

NOTES:

1) PUMP BUILDING SHALL BE AS MFG. BY 'ASSOCIATED FIBERGLASS ENTERPRISES' 1-800-798-6561 MODEL NUMBER 96144 OR PRE-APROVED EQUAL.

2) ALL ABOVE GRADE PIPING SHALL BE GALVANIZED STEEL PIPE OR SCH-80 PVC. EXTERIOR ABOVE GRADE PIPING SHALL BE INSULATED AS SPECIFIED.

3) SEE ELECTRICAL FOR ADDITIONAL DETAILS. SERVICE PUMPS SHALL ALTERNATE AND SHALL BE ACTIVATED BY THE PRESSURE SWITCH(S). A LOW PRESSURE LOCKOUT SHALL BE PROVIDED TO PREVENT PUMPS FROM COMING ON IF THE GROUND STORAGE TANK IS EMPTY. CONTROLS SHALL ACHIEVE THE FOLLOWING PRESSURE SETTINGS:
PUMP OFF – 155 FT (67 PSI)
PUMP ON – 120 FT (52 PSI)

4) HIGH SERVICE PUMPS SHALL BE AS MFG. BY GOULDS MULTISTAGE MODEL 33SV60GH7L20 (7.5 HP RATING) OR APPROVED EQUAL. PUMP SHALL INCLUDE CAST IRON MOUNTING BASE SECURED TO THE CONCRETE FOUNDATION WITH ANCHOR BOLTS IN ACCORDANCE WITH THE MFG. RECOMMENDATIONS. PUMPS SHALL BE CAPABLE OF APPROXIMATELY 65 GPM @ 155' TDH.

garza emc
7708 Rialto Blvd., Suite 125
Austin, Texas 78735
Tel. (512) 298-3284 Fax (512) 298-2592
TBPE # F-14629
Garza EMC, LLC © Copyright 2021

FORD POWELL &CARSON
Architects & Planners, Inc.
Architecture
Planning
Preservation
Interior Design
711 Navarro, Suite 400
San Antonio, Texas 78205
210/226-1246
92706

TEXAS PARKS & WILDLIFE

JULIA L. MRNAK
113030
04/09/2021

SOUTH LLANO RIVER STATE PARK
HEADQUARTERS BUILDING RENOVATION AND EXPANSION
PROJECT NUMBER: 134245

DATE: 04.09.2021
DESIGNED BY:
DRAWN BY:
REVIEWED BY:
REVISED:
REVISED:
REVISED:

CONSTRUCTION DOCUMENTS

SHEET TITLE
PUMP STATION DETAILS 2

SHEET NUMBER
C908

PATH: V:\101345\00011\Civil\CAD\PUMP STATION\1342501110TL03.dwg

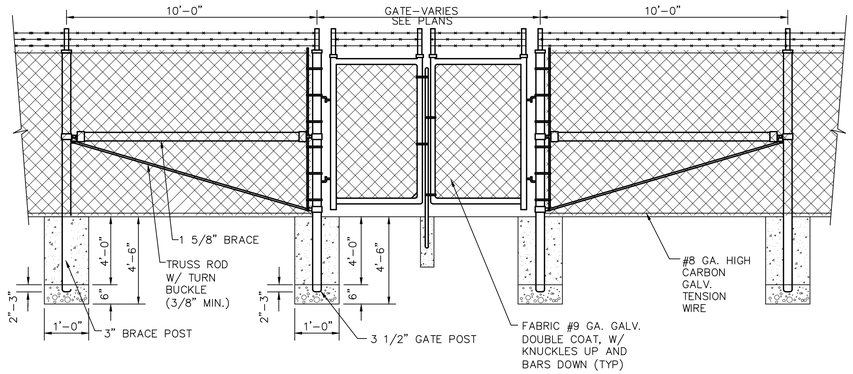


3 DOUBLE DOOR GATE ENTRY
SCALE:N.T.S.

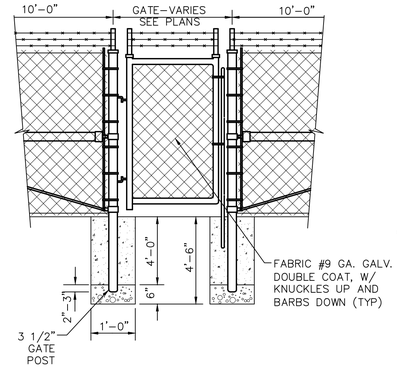


2 SINGLE DOOR GATE ENTRY
SCALE:N.T.S.

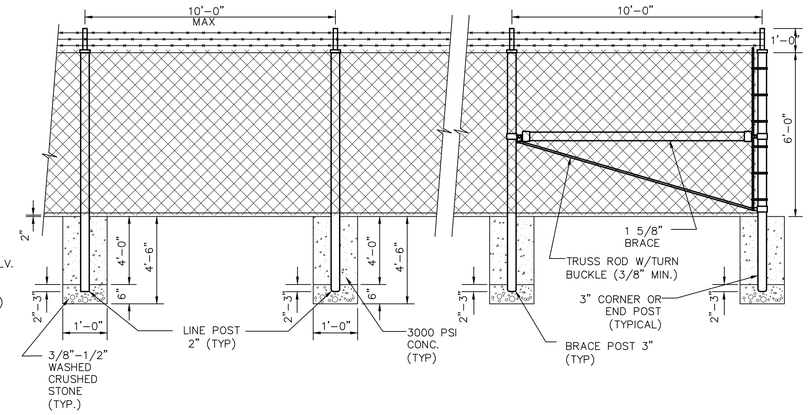


1 TYPICAL GATE ELEVATION
SCALE:N.T.S.

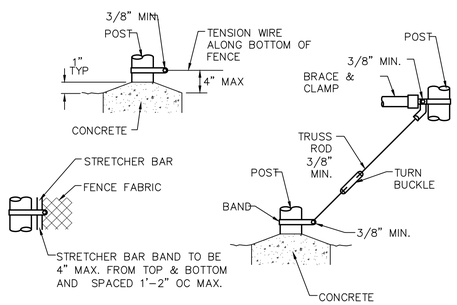


4 FASTENING DETAIL
SCALE:N.T.S.

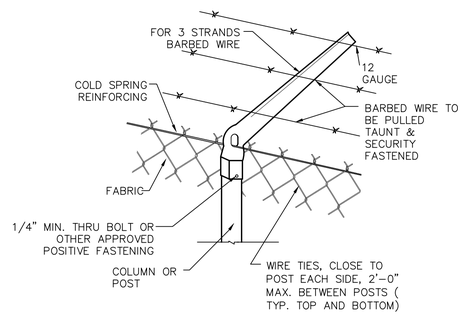


5 EXTENSION ARM FOR BARBED WIRE
SCALE:N.T.S.

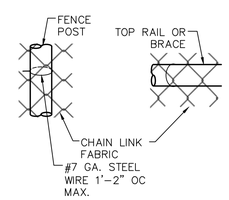


6 WIRE TIES FOR CHAIN LINK
SCALE:N.T.S.

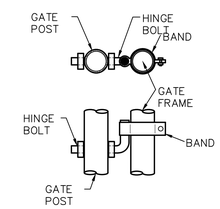


7 GATE HINGE DETAIL
SCALE:N.T.S.

NOTES:

1. ALL POLES, BRACES, FABRIC AND HARDWARE SHALL BE GALVANIZED
2. BOTTOM OF FABRIC SHALL BE NO MORE THAN 4 INCHES ABOVE FINAL GRADE AT ANY POINT ALONG THE FENCE.
3. INSERT FENCE 2'-0" INSIDE PROPERTY BOUNDARY.

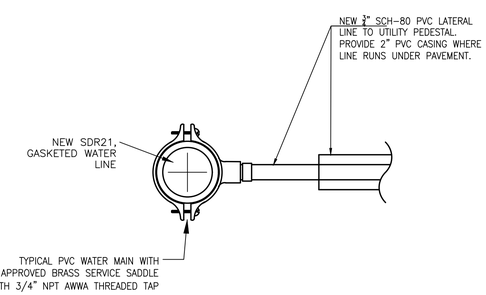


6 TYPICAL DETAIL WATER SERVICE LINE TAP
NOT TO SCALE

garza EMC
7708 Rialto Blvd., Suite 125
Austin, Texas 78735
Tel. (512) 298-3284 Fax (512) 298-2592
TBPE # F-14629
Garza EMC, LLC © Copyright 2021

FORD POWELL &CARSON Architects & Planners, Inc.
Architecture
Planning
Preservation
Interior Design
711 Navarro, Suite 400
San Antonio, Texas 78205
210/226-1246
92706

TEXAS PARKS & WILDLIFE

JULIA L. MRNAK 113030
04/09/2021

SOUTH LLANO RIVER STATE PARK
HEADQUARTERS BUILDING RENOVATION AND EXPANSION
PROJECT NUMBER: 134245

DATE: 04.09.2021
DESIGNED BY:
DRAWN BY:
REVIEWED BY:
REVISED:
REVISED:
REVISED:

CONSTRUCTION DOCUMENTS

SHEET TITLE
PUMP STATION DETAILS 3

SHEET NUMBER
C909

PATH: W:\101345\00011\Civil\CAD\PUMP STATION\134250110TL03.dwg

## LEGEND

EXISTING TREES TO BE REMOVED BY TEXAS CAPITAL IMPROVEMENTS.

EXISTING TREES TO BE REMOVED BY TXDoT

EXISTING TREES TO REMAIN

EXISTING TREES TO REMAIN

TP — TP — TREE PRESERVATION FENCING

— — — L.O.C. — — — LIMITS OF CONSTRUCTION

TREE REMOVAL SCHEDULE BY TEXAS CAPITAL IMPROVEMENTS

52 TOTAL TREES TO BE REMOVED PER IMPROVEMENTS

NOTE: ALL EXISTING TREES ARE ON TPWD PROVIDED SURVEY. SEE CIVIL DRAWINGS FOR TREES SCHEDULED TO BE REMOVED.

+329 MESQUITE INCHES
+37 LIVE OAK INCHES
+152 JUNIPER CEDAR INCHES
+6 HACKBERRY INCHES

6 PROPOSED TREES TO BE MITIGATED

TREE REMOVAL SCHEDULE BY TX DOT

107 TOTAL TREES TO BE REMOVED PER IMPROVEMENTS

NOTE: ALL EXISTING TREES ARE ON TPWD PROVIDED SURVEY. SEE CIVIL DRAWINGS FOR TREES SCHEDULED TO BE REMOVED.

+431 MESQUITE INCHES
+118 LIVE OAK INCHES
+166 JUNIPER CEDAR INCHES
+42 CEDAR ELM INCHES

## TREE PRESERVATION NOTE(S) ( # Keyed Notes)

1. Existing trees are to be selectively retained as directed by Landscape Architect. Trees that are dead standing shall be removed regardless of size.
2. Root Protection Zone (RPZ): RPZ requirements are defined as 12" diameter per 1" caliper of trunk at 42" height (Diameter Breast Height, DBH). Minimum RPZ requirements are 6" to each 1" caliper at DBH or 5' to trunk whichever is greater.
3. Erect temporary fencing before commencing site preparation work. Maintain fencing during full construction period. Remove fencing only when all hardscape construction work is completed. Refer to detail 3/L301.
4. Protect all existing trees from disposal or storage of construction materials or vehicle parking. Protect trees from spreading of spoiled soil over RPZ. Reference 1/L301 for RPZ information.
5. Repair preserved trees damaged by construction operations per arborist industry standards. All broken branches and exposed roots of existing trees shall be cut cleanly. All oak species must be painted with tree wound dressing within 30 minutes. Reference 2/L301.
6. Replace trees scheduled to remain that are removed or damaged beyond repair by construction operations, as determined by Landscape Architect, with tree(s) of similar size and species. Cost for tree replacement shall be determined in accordance with the Tree Evaluation Formula as described in "A Guide to the Professional Evaluation of Landscape Trees, Specimen Shrubs, and Evergreens" as published by the International Society of Arboriculture.
7. All costs for repair and replacement of preserved trees damaged by construction operations due to lack of required tree protection as described in the drawings, shall be borne by contractor. Tree replacement shall be based upon 200.00 dollars per inch damaged and shall be deducted from the Contractor's Final Payment.
8. Roots or branches in conflict with construction shall be pruned to a height of 15 feet according to proper pruning methods. Ref. 2/L301.
9. All pruning to be coordinated with TPWD Natural Resource Coordinator prior to commencing with the work. No pruning shall occur prior to approval.
10. Exposed roots shall be covered at the end of the work day using techniques such as covering with soil, mulch or wet burlap.
11. Trees to remain, which are damaged or lost due to contractor's negligence during construction shall be replaced at a ratio of inch per inch.
12. Contractor is responsible for providing a licensed tree maintenance professional throughout the project.

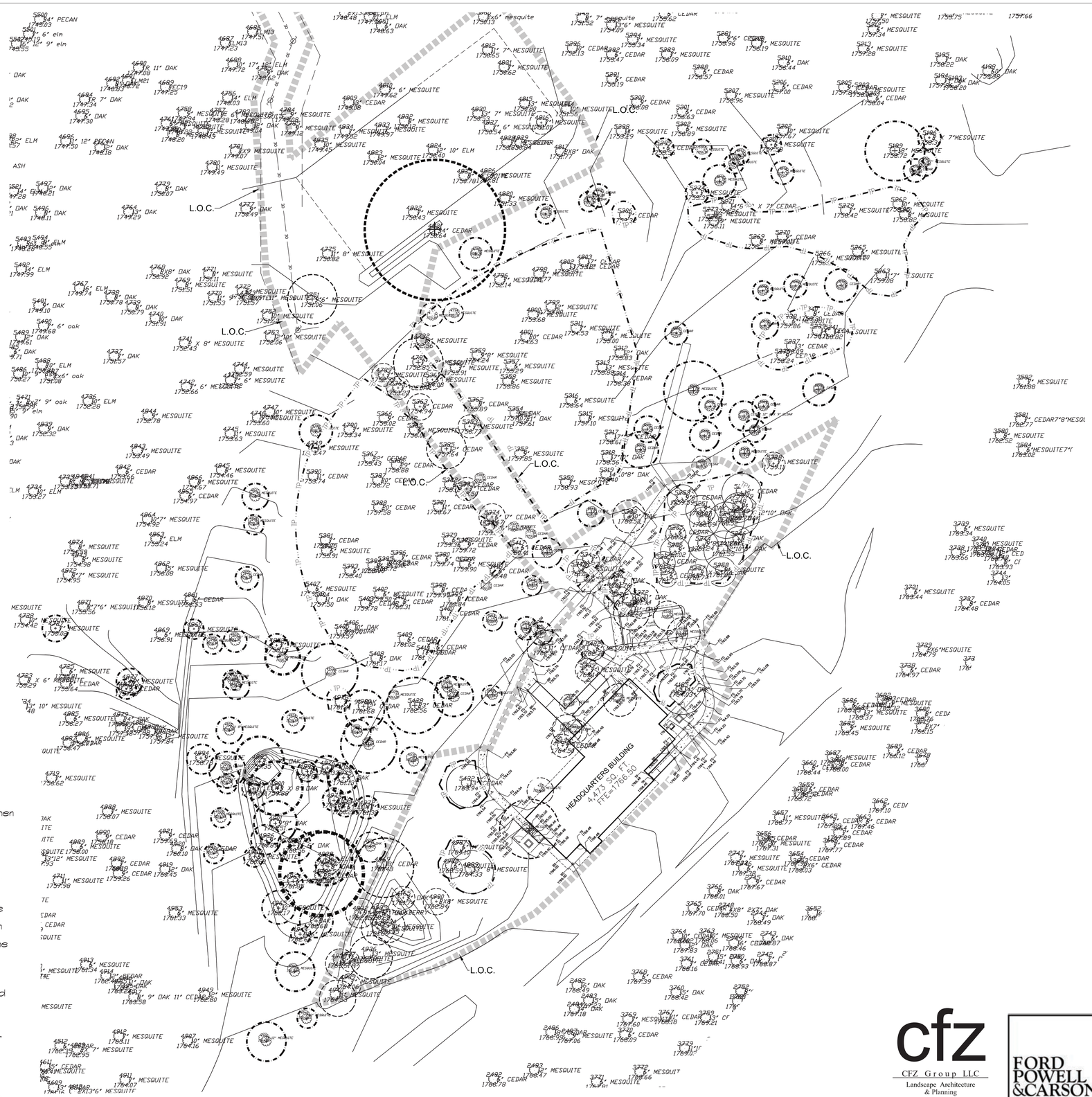


1 TREE PRESERVATION PLAN
SCALE: 1"= 30'-0"

TEXAS PARKS & WILDLIFE

STATE OF TEXAS
LETICIA E. VAVALA
1457
REGISTERED
LANDSCAPE ARCHITECT
04.09.2021

# SOUTH LLANO RIVER STATE PARK
## HEADQUARTERS BUILDING RENOVATION AND EXPANSION
PROJECT NUMBER: 134245

DATE: 04.09.2021
DESIGNED BY: LZ
DRAWN BY: BPF
REVIEWED BY: LZ
REVISED:
REVISED:
REVISED:

CONSTRUCTION DOCUMENTS

SHEET TITLE
TREE PRESERVATION PLAN

SHEET NUMBER
L300


cfz
CFZ Group LLC
Landscape Architecture & Planning
7410 John Smith Drive, Suite 208
San Antonio, Texas 78229
210-366-1911/210-366-0044 fax

FORD POWELL & CARSON
Architects & Planners, Inc.
711 Navarro, Suite 400
San Antonio, Texas 78205
210/226-1246
92706
Architecture
Planning
Preservation
Interior Design


S:\17-1107\DWGS\CAD\71107L3.DWG

PATH: S:\17-1107\Dwgs\CAD\71107L3.dwg

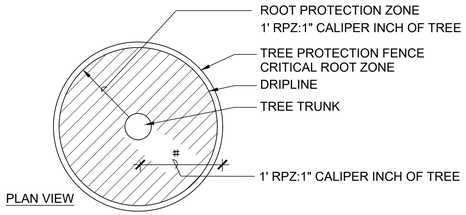


## TREE PROTECTION NOTES:

1. All trees to be preserved shall be protected against injury or damage, including soil compaction, breaking or skinning of roots, trunks, or branches during construction operations. A minimum of 50% of the RPZ shall be preserved at natural grade. No cutting, filling, trenching, root disturbance, soil disturbance, or construction impacts shall occur closer to the trunk than 1/2 the RPZ radius.
2. Unless otherwise noted, install a temporary min. 4' ht fencing. See Detail 4/L301.
3. The proposed finished grade and elevation within the RPZ of any existing tree shall not be raised or lowered more than three (3) inches. Finished grade and elevation above or below 3" shall included tree wells/retaining walls outside the RPZ.

## 1 ROOT PROTECTION ZONE (RPZ)
NTS

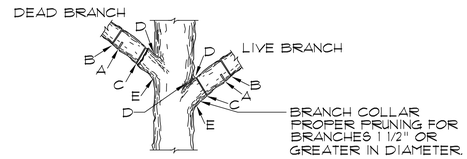


NOTE: DO NOT CUT FROM D to E.

A. FIRST CUT - TO PREVENT THE BARK FROM BEING PEELED WHEN THE BRANCH FALLS.

B. SECOND CUT - TO REDUCE THE WEIGHT OF BRANCH.

C. FINAL CUT - ALLOW FOR HEALING COLLAR BUT NO STUBS

D. BRANCH RIDGES - INDENT PROPERLY BRANCH RIDGES WHICH ARE SITE FOR DECAY.

FOR OAKS ONLY: PAINT ALL WOUNDS OR CUTS GREATER THAN 1" DIAMETER WITH PRUNING PAINT WITHIN 30 MIN TO PREVENT THE SPREAD OF OAK WILT.

## 2 BRANCH PRUNING
NTS

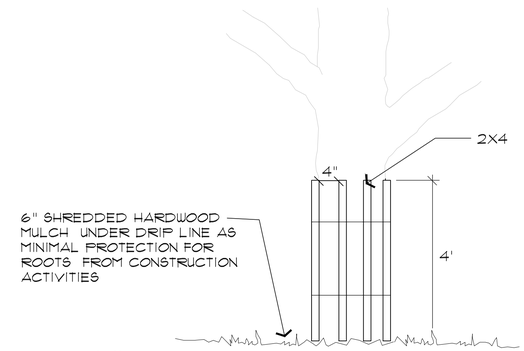


NOTE:
1. WRAP TREE TRUNK WITH 2"X4" WOOD STUDS AND ROPE OR BAND IN PLACE AS NEEDED TO PROTECT TREES IN WORK AREAS.
2. ALL TREES WITHIN LIMITS OF CONSTRUCTION SHALL HAVE TREE ARMOR.

## 3 TREE ARMOR
NTS

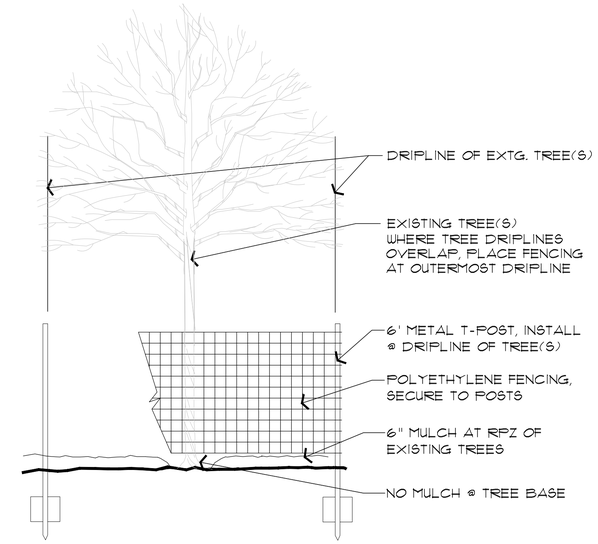


## 4 TREE BARRICADE FENCING
NTS

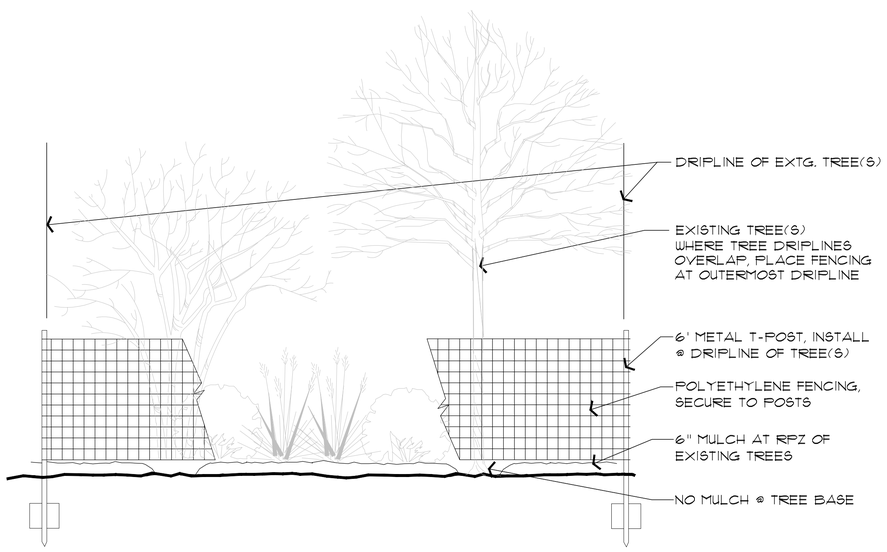


## 5 TREE BARRICADE FENCING (MULTIPLE TREES)
NTS

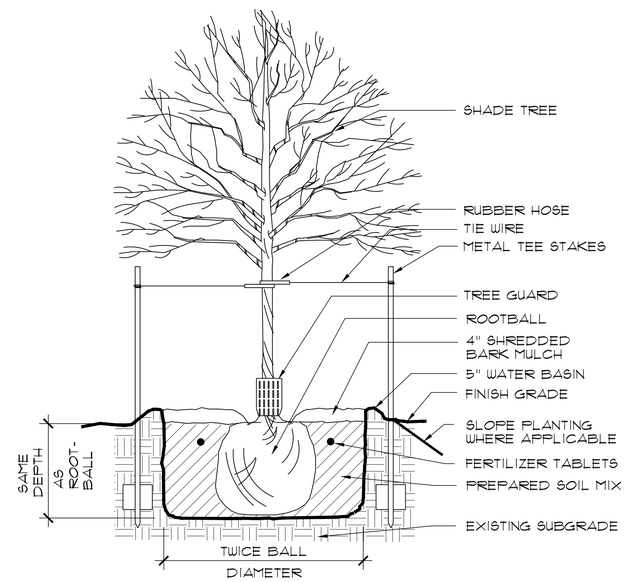


## 6 SHADE TREE PLANTING
NTS

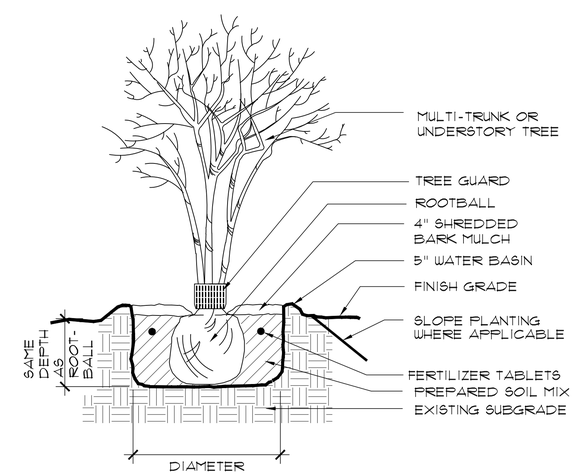


## 7 MULTI-TRUNK TREE PLANTING
NTS


cfz
CFZ Group LLC
Landscape Architecture
& Planning
7410 John Smith Drive, Suite 208
San Antonio, Texas 78229
210-366-1911/210-366-0044 fax

FORD POWELL &CARSON
Architects & Planners, Inc.
711 Navarro, Suite 400
San Antonio, Texas 78205
210/226-1246
92706

Architecture
Planning
Preservation
Interior Design


TEXAS PARKS & WILDLIFE

STATE OF TEXAS
LETICIA ZAVALA
1457
REGISTERED
LANDSCAPE ARCHITECT
04.09.2021

SOUTH LLANO RIVER STATE PARK
HEADQUARTERS BUILDING RENOVATION AND EXPANSION
PROJECT NUMBER: 134245

DATE: 04.09.2021
DESIGNED BY: LZ
DRAWN BY: BPF
REVIEWED BY: LZ
REVISED:
REVISED:
REVISED:

CONSTRUCTION DOCUMENTS

SHEET TITLE
TREE PRESERVATION AND LANDSCAPE DETAILS

SHEET NUMBER
L301

S:\17-1107\DWGS\CAD\71107L3.DWG

PATH: S:\17-1107\Dwgs\CAD\71107L3.dwg

## LEGEND

- EXISTING TREES
- EXISTING TREES TO REMAIN
- LIVE OAKS 4" CALIPER
- CEDAR ELMS 4" CALIPER
- LACEY OAKS 4" CALIPER
- MOUNTAIN LAUREL 3' HT.
- THUNDER TURF SEED MIX (A)
- SOLID SOD 609 BUFFALO GRASS (B)

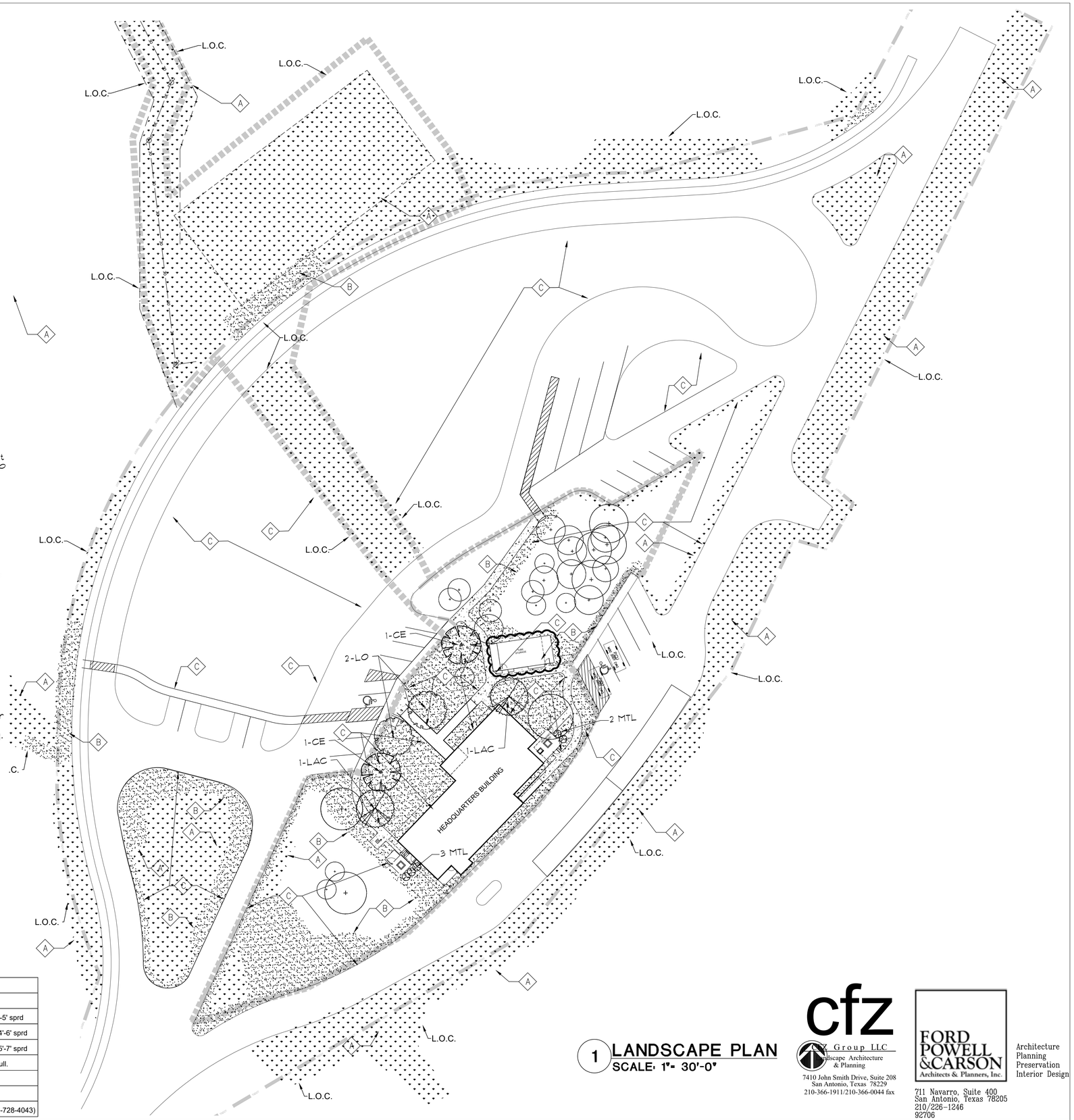


## GENERAL LANDSCAPE NOTES:

1. Landscape contractor shall be responsible for making himself familiar with the specifications and all submittal requirements. It is the responsibility of the Landscape contractor to notify the Landscape Architect for site observations as specified in the specifications. Failure to notify the Landscape Architect does not relieve the contractor from observation approval and will require the contractor to install/repair work as required for approval at the cost of the contractor.
2. Landscape contractor is to contact Landscape Architect for a pre-construction meeting prior to commencing landscape work.
3. The landscape contractor is to notify all local utilities agencies 72 hours prior to any excavation. Landscape contractor shall be responsible for making himself familiar with all underground utilities, pipes and structures. The Landscape Contractor and Irrigation contractor shall take sole responsibility for any cost incurred due to damage of said utilities whether or not all local utilities agencies are notified.
4. Do not willingly proceed with construction as designed when it is obvious that unknown obstruction and/or grade differences exist that may not have been known during design. Such conditions shall be immediately brought to the attention of the Landscape Architect. The Contractor shall assume full responsibility for all necessary revisions due to failure to give such notification.
5. The Contractor shall be responsible for any coordination with subcontractors as required to accomplish planting operations.
6. If conflicts arise between size of areas and plans, Contractor is to contact Landscape Architect for resolution. Failure to make such conflicts known will result in Contractor's liability to relocate the materials.
7. Contractor shall be responsible for final plant material quantities.
8. All plant material will be of highest quality, fully leaved and rooted yet not root bound. Any material not meeting this specification will be rejected.
9. Plant materials shall be installed the same day of delivery.
10. All construction debris and rocks/stones over 1/4" dia. (in any direction) shall be removed prior to fine grading.
11. All trees shall be staked and approved by Landscape Architect or Architect prior to installation.
12. Clear all existing understory brush within the fire defensible zone with hand tools only. Remove all dead, standing trees. Prune tree limbs of trees to remain to 15' above ground.
13. Seed all disturbed areas, except where solid sod is indicated. Refer to landscape specifications for seeding mixture.
14. All seeded areas shall receive Cereal Rye Grain (Secale cereale) as a temporary grass after September 15th. Reseed area with Thunder Turf seed mix as supplied by the Native American Seed Company in the spring.
15. All seeded areas shall be established by temporary above ground irrigation system. See specifications.
16. **In the event that migratory birds are encountered onsite during project construction, every effort will be made to avoid adverse impacts to protect birds, active nests, eggs, and/or young.**

## ( # Keyed Notes)

(A) Seed to limits of grading and construction damage, except where solid sod is indicated on landscape plan. See Civil Dwgs. for grading. Contractor is responsible for quantities needed to cover all seeded areas.

(B) Solid sod 609 Buffalo Grass to limits shown on landscape plans. See Civil Dwgs. for grading. Contractor is responsible for quantities needed to cover all sodded areas.

(C) Fire Defensible Zone. See Note 12.

**PLANT SCHEDULE:**

| KEY | SCIENTIFIC NAME | COMMON NAME | | CONDITION | REMARKS |
|---|---|---|---|---|---|
| | **TREES** | | | | |
| LAC | Quercus laceyi | Lacey Oak | | Container | 4" cal. Single trunk, 9'-11' ht; 3'-5' sprd |
| LO | Quercus virginiana | Live Oak | | Container | 4" cal. Single trunk, 10'-12' ht; 4'-6' sprd |
| CE | Ulmus crassifolia | Cedar Elm | | Container | 4" cal. Single trunk, 11'-13' ht; 5'-7' sprd |
| MTL | Secora secundiflora | Texas Mountain Laurel | | Container | 3' ht, min. 3 trunks, 3'-4' sprd, full. |
| | **LAWN** | | **QUANTITY** | | |
| | Buchloe dactyloides '609' | 609 Buffalo Grass | 2,750 | S.Y. | solid sod |
| | | Thunder Turf Seed Mix | 71,318 | S.F. | Native American Seed Co (800-728-4043) |

## 1 LANDSCAPE PLAN
SCALE: 1"= 30'-0"


cfz
CFZ Group LLC
Landscape Architecture & Planning
7410 John Smith Drive, Suite 208
San Antonio, Texas 78229
210-366-1911/210-366-0044 fax

FORD POWELL &CARSON
Architects & Planners, Inc.
711 Navarro, Suite 400
San Antonio, Texas 78205
210/226-1246
92706
Architecture
Planning
Preservation
Interior Design


TEXAS PARKS & WILDLIFE

STATE OF TEXAS
JETTON & WALLACE
1457
REGISTERED
LANDSCAPE ARCHITECT
04.09.2021

# SOUTH LLANO RIVER STATE PARK
## HEADQUARTERS BUILDING RENOVATION AND EXPANSION
PROJECT NUMBER: 134245

DATE: 04.09.2021
DESIGNED BY: LZ
DRAWN BY: BPF
REVIEWED BY: LZ
REVISED:
REVISED:
REVISED:

CONSTRUCTION DOCUMENTS

SHEET TITLE
LANDSCAPE PLAN

SHEET NUMBER
L302

S:\17-1107\DWGS\CAD\71107L302.DWG

PATH: S:\17-1107\Dwgs\CAD\71107L302.dwg

# ARCHITECTURAL ABBREVIATIONS

| ABBREVIATION | TERM | KIT | KITCHEN |
|---|---|---|---|
| AFF | ABOVE FINISHED FLOOR | LBL | LABEL |
| ACOUS | ACOUSTICAL | LAM | LAMINATION |
| ACOUS INSUL | ACOUSTICAL INSULATION | LAV | LAVATORY |
| ACOUS PNL | ACOUSTICAL PANEL | LH | LEFT HAND |
| AGGR | AGGREGATE | LHR | LEFT HAND REVERSE |
| AC | AIR CONDITIONING | LIB | LIBRARY |
| AHU | AIR HANDLING UNIT | LLH | LONG LEG HORIZONTAL |
| ALT | ALTERNATE | LLV | LONG LEG VERTICAL |
| ANOD | ANODIZED | LVR | LOUVER |
| ARCH | ARCHITECT/ARCHITECTURAL | | |
| A/E | ARCHITECT/ENGINEER | MAX | MAXIMUM |
| AD | AREA DRAIN | MECH | MECHANICAL |
| ASPH | ASPHALT | MEMB | MEMBRANE |
| AV | AUDIO VISUAL | MC | MEDICINE CABINET |
| APPROX | APPROXIMATE | MH | MAN HOLE |
| | | MO | MASONRY OPENING |
| BAL | BALANCE | MIN | MINIMUM |
| BM | BEAM | MTD | MOUNTED |
| BITUM | BITUMONOUS | MTG | MOUNTING |
| BLDG | BUILDING | MTL | METAL |
| BLK | BLOCK | | |
| BD | BOARD | NA | NOT APPLICABLE |
| BOT | BOTTOM | NIC | NOT IN CONTRACT |
| BLVD | BOULEVARD | NTS | NOT TO SCALE |
| BTU | BRITISH THERMAL UNIT | NO | NUMBER |
| | | NOM | NOMINAL |
| CAB | CABINET | | |
| CO | CASED OPENING | OC | ON CENTER |
| CI | CAST IRON | OD | OUTSIDE DIAMETER |
| CLG | CEILING | OPP | OPPOSITE |
| CL | CENTER LINE | | |
| C/C | CENTER TO CENTER | PTD | PAINTED |
| CER TILE | CERAMIC TILE | PR | PAIR |
| CCTV | CLOSED CIRCUIT TELEVISION | PNL | PANEL |
| CLO | CLOSET | PLAM | PLASTIC LAMINATE |
| COAX | COAXIAL CABLE | PLYWD | PLYWOOD |
| COL | COLUMN | LB | POUND |
| COMM | COMMUNICATION | PWR | POWER |
| CONC | CONCRETE | PRELIM | PRELIMINARY |
| CMU | CONCRETE MASONRY UNIT | PREP | PREPARATION |
| CONN | CONNECTION | PROJ | PROJECTION |
| CONSTR | CONSTRUCTION | PA | PUBLIC ADDRESS |
| CJ | CONTROL JOINT | | |
| CONT | CONTINUOUS/CONTINUATION | RR | RAILROAD |
| CONTR | CONTRACT/CONTRACTOR | REF | REFERENCE |
| COORD | COORDINATE | RE | REFER TO |
| CORR | CORRUGATED | REG | REGISTER |
| CU FT | CUBIC FOOT | RESIL | RESILIENT |
| | | RA | RETURN AIR |
| DET | DETAIL | RHR | RIGHT HAND REVERSE |
| DIFF | DIFFUSER | RH | RIGHT HAND |
| DIM | DIMENSION | RD | ROAD |
| DC | DIRECT CURRENT | RM | ROOM |
| DW | DISHWASHER | RO | ROUGH OPENING |
| DISTR | DISTRIBUTION | | |
| DO | DITTO | SALV | SALVAGE |
| DH | DOUBLE HUNG | SS | SANITARY SEWER |
| DN | DOWN | SCHED | SCHEDULE |
| DS | DOWNSPOUT | SECT | SECTION |
| DR | DRAIN | SHT | SHEET |
| DWR | DRAWER | SIM | SIMILAR |
| DF | DRINK FOUNTAIN | SK | SINK |
| | | SJ | SLIP JOINT |
| EL | ELEVATION | SPEC | SPECIFICATION |
| ELEC | ELECTRIC | SB | SPLASH BLOCK |
| ELEV | ELEVATOR | SQ FT | SQUARE FOOT |
| EMER | EMERGENCY | SQ IN | SQUARE INCH |
| ENG | ENGINE | SS | STAINLESS STEEL |
| ENGR | ENGINEER | STL | STEEL |
| ENTR | ENTRANCE | STL JST | STEEL JOIST |
| EST | ESTIMATE | STOR | STORAGE |
| EXH | EXHAUST | SD | STORM DRAIN |
| EXP | EXPANSION | STRUCT | STRUCTURAL |
| EXP JT | EXPANSION JOINT | SUPPL | SUPPLEMENT |
| EXT | EXTERIOR | SUSP | SUSPEND |
| | | SYM | SYMBOL |
| FOC | FACE OF CONCRETE | SYMM | SYMMETRICAL |
| FOF | FACE OF FINISH | SYS | SYSTEM |
| FOM | FACE OF MASONRY | | |
| FOS | FACE OF STUD | TK BD | TACKBOARD |
| FEC | FIRE EXTINGUISHER CABINET | TEL | TELEPHONE |
| FHC | FIRE HOSE CABINET | TV | TELEVISION |
| FD | FLOOR DRAIN | TEMP | TEMPORARY |
| FIN FLR | FINISHED FLOOR | THK | THICKNESS |
| FLUOR | FLUORESCENT | THRU | THROUGH |
| FR | FRAME | T&G | TONGUE AND GROOVE |
| FURN | FURNITURE | TC | TOP OF CONCRETE/CURB |
| FURR | FURRING | TOS | TOP OF SLAB |
| | | TYP | TYPICAL |
| GA | GAGE | | |
| GAL | GALLON | UPS | UNINTERRUPTIBLE POWER SUPPLY |
| GALV | GALVANIZED | | |
| GENL CONTR | GENERAL CONTRACTOR | VAC | VACUUM |
| GEN | GENERATOR | VAV | VARIABLE AIR VOLUME |
| GL | GLASS/GLAZING | VERT | VERTICAL |
| GYP | GYPSUM | VIN | VINYL |
| | | VCT | VINYL COMPOSITION TILE |
| HDWR | HARDWARE | VWC | VINYL WALL COVERING |
| HM | HOLLOW METAL | | |
| HORIZ | HORIZONTAL | W/W | WALL TO WALL |
| HB | HOSE BIBB | WC | WATER CLOSET |
| HR | HOUR | WS | WEATHERSTRIPPING |
| HT | HEIGHT | WT | WEIGHT |
| | | WWF | WELDED WIRE FABRIC |
| ID | IDENTIFICATION | W/ | WITH |
| ID | INSIDE DIAMETER | W/O | WITHOUT |
| INSUL | INSULATION | WD | WOOD |
| INV | INVERT | WP | WORK POINT |
| | | WP | WATERPROOFING |
| JAN | JANITOR | | |
| JT | JOINT | YCO | YARD CLEANOUT |
| | | YD | YARD DRAIN |

# REFERENCE SYMBOLS

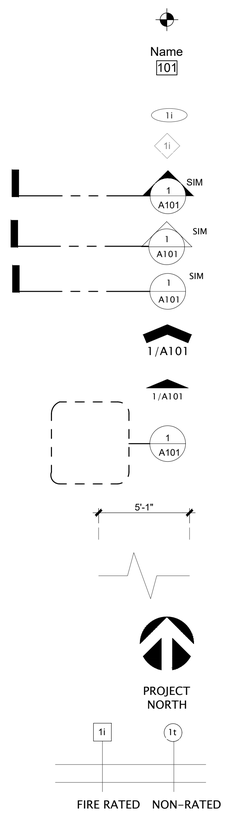


EXISTING SPOT ELEVATION

ROOM SPACE NAME, NUMBER, AND SIZE (SF)

DOOR NUMBER

WINDOW OR CURTAINWALL TYPE

BUILDING SECTION

EXTERIOR WALL SECTION

DETAIL SECTION

EXTERIOR ELEVATION

INTERIOR ELEVATION

ENLARGED PLAN OR ELEVATION

DIMENSION

TO BREAK OFF PARTS OF DRAWINGS

NORTH ARROW

PARTITION TYPE

1 View Name
SCALE: 1/8" = 1'-0"

KEYED DETAIL SYMBOL

9' - 0"

CEILING OR FLOOR ELEVATION

REVISION NUMBER
LAST REVISION ENCLOSED WITH CLOUD

0

REFERENCE GRID: REFER TO STRUCTURAL FOR DIMENSIONING AND COORDINATION

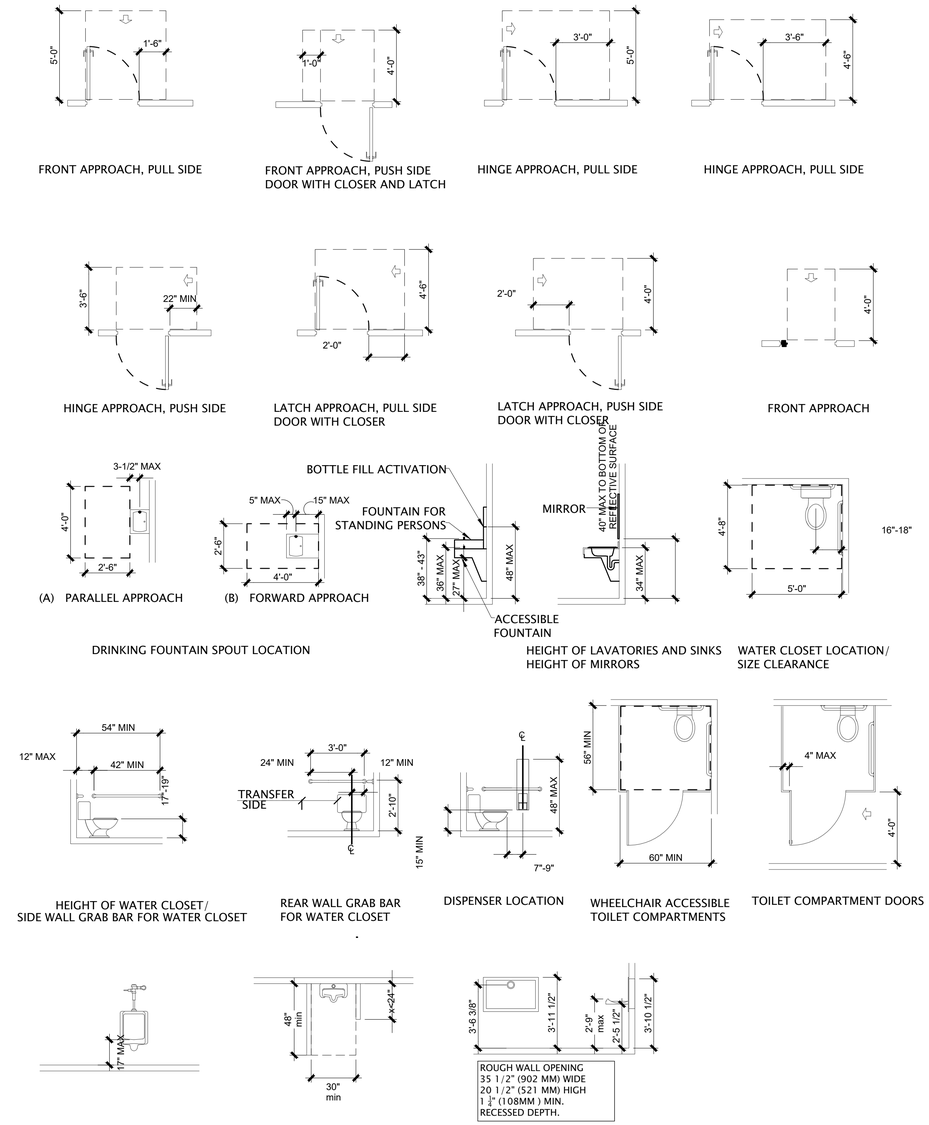


FRONT APPROACH, PULL SIDE

FRONT APPROACH, PUSH SIDE DOOR WITH CLOSER AND LATCH

HINGE APPROACH, PULL SIDE

HINGE APPROACH, PULL SIDE

HINGE APPROACH, PUSH SIDE

LATCH APPROACH, PULL SIDE DOOR WITH CLOSER

LATCH APPROACH, PUSH SIDE DOOR WITH CLOSER

FRONT APPROACH

DRINKING FOUNTAIN SPOUT LOCATION

HEIGHT OF LAVATORIES AND SINKS
HEIGHT OF MIRRORS

WATER CLOSET LOCATION/ SIZE CLEARANCE

HEIGHT OF WATER CLOSET/ SIDE WALL GRAB BAR FOR WATER CLOSET

REAR WALL GRAB BAR FOR WATER CLOSET

DISPENSER LOCATION

WHEELCHAIR ACCESSIBLE TOILET COMPARTMENTS

TOILET COMPARTMENT DOORS

URINAL MOUNTING HEIGHT

URINAL CLEAR FLOOR SPACE

BABY CHANGING STATION MOUNTING SPACE

1 TAS DETAILS
SCALE: 1/4" = 1'-0"

FORD POWELL &CARSON
Architects & Planners, Inc.

Architecture
Planning
Preservation
Interior Design

711 Navarro, Suite 400
San Antonio, Texas 78205
210/226-1246
92706

TEXAS PARKS & WILDLIFE

REGISTERED ARCHITECT
RACHEL L. H. WRIGHT
20948
STATE OF TEXAS

SOUTH LLANO RIVER STATE PARK
HEADQUARTERS BUILDING RENOVATION AND EXPANSION
PROJECT NUMBER: 134245

DATE: 04.09.2021
DESIGNED BY: NP
DRAWN BY: JK,RF
REVIEWED BY: GC/AC
REVISED:
REVISED:
REVISED:

CONSTRUCTION DOCUMENTS

SHEET TITLE
REFERENCE SYMBOLS, AND ABBREVIATIONS

SHEET NUMBER
G101

PATH: P:\92706_S_llano_SP\(17) Drawings\(8) CD's 100 Percent\(2) Headquarters\G101-REFERENCESYMBOLS,ABBREVIATIONS,AND TASDETAILS.dwg

TOTAL CONDITIONED SPACE: 2,738 S.F.
COVERED, NON-CONDITIONED SPACE: 1,235 S.F.

NOTE:

1. ALL EXTERIOR WALLS SHALL HAVE SPRAY -IN INSULATION, AS SHOWN IN DRAWING WITH SHADING PATTERN
2. ALL INTERIOR WALLS AND CEILINGS IN RESTROOMS AND MECH. ROOMS, SHALL BE INSTALLED WITH ACOUSTICAL BATT INSULATION.

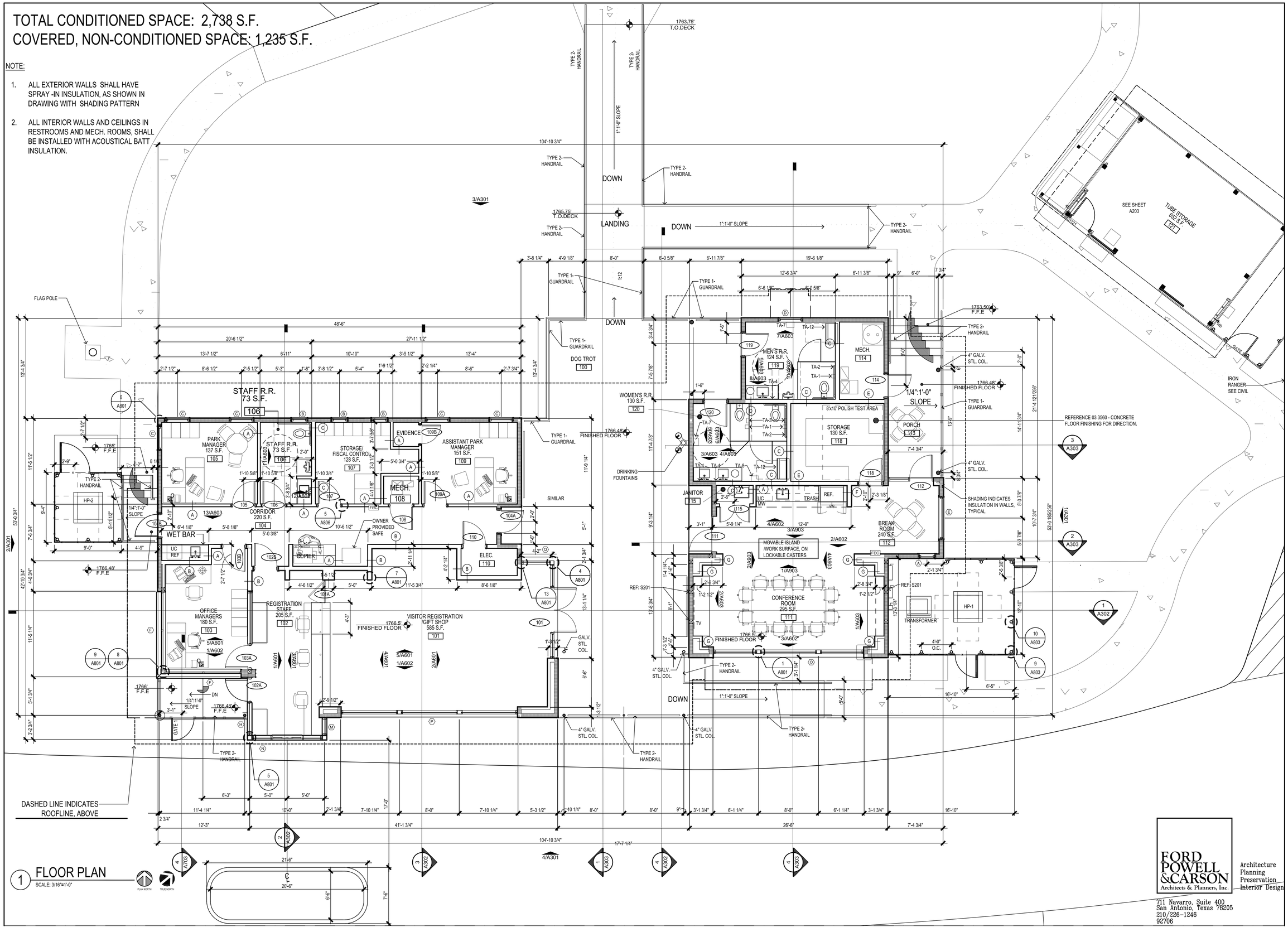


1 FLOOR PLAN
SCALE: 3/16"=1'-0"

FORD POWELL &CARSON
Architects & Planners, Inc.
Architecture
Planning
Preservation
Interior Design
711 Navarro, Suite 400
San Antonio, Texas 78205
210/226-1246
92706

TEXAS PARKS & WILDLIFE

REGISTERED ARCHITECT
RACHEL L. H. WRIGHT
20948
STATE OF TEXAS

# SOUTH LLANO RIVER STATE PARK
## HEADQUARTERS BUILDING RENOVATION AND EXPANSION
PROJECT NUMBER: 134245

DATE: 04.09.2021
DESIGNED BY: NP
DRAWN BY: JK,RF
REVIEWED BY: GC/AC
REVISED:
REVISED:
REVISED:

CONSTRUCTION DOCUMENTS

SHEET TITLE
FLOOR PLAN

SHEET NUMBER
A201

PATH: \\FREENAS\Projects\92706_S_llano_SP\(17) Drawings\(8) CD's 100 Percent\(2) Headquarters\A201.dwg

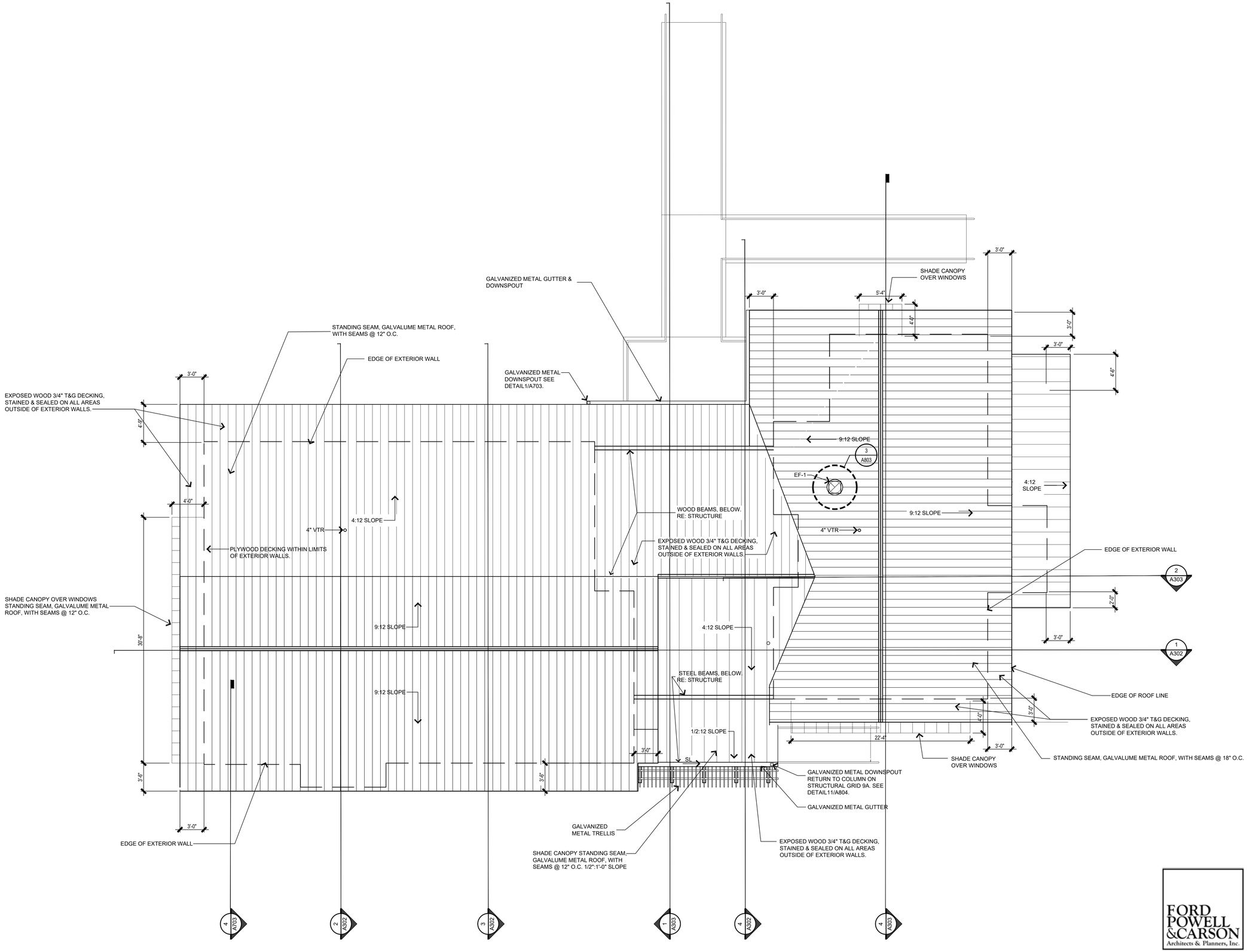


1 ROOF PLAN
1/8"=1'-0"

PLAN NORTH TRUE NORTH

TEXAS PARKS & WILDLIFE

REGISTERED ARCHITECT RACHEL L. H. WRIGHT 20948 STATE OF TEXAS

# SOUTH LLANO RIVER STATE PARK
## HEADQUARTERS BUILDING RENOVATION AND EXPANSION
PROJECT NUMBER: 134245

DATE: 04.09.2021
DESIGNED BY: NP
DRAWN BY: JK,RF
REVIEWED BY: GC/AC
REVISED:
REVISED:
REVISED:

CONSTRUCTION DOCUMENTS

SHEET TITLE
ROOF PLAN

SHEET NUMBER
A202

FORD POWELL & CARSON Architects & Planners, Inc.
Architecture
Planning
Preservation
Interior Design
711 Navarro, Suite 400
San Antonio, Texas 78205
210/226-1246
92706

PATH: P:\92706_S_llano_SP\(17) Drawings\(B) CD's 100 Percent\(2) Headquarters\A202.dwg

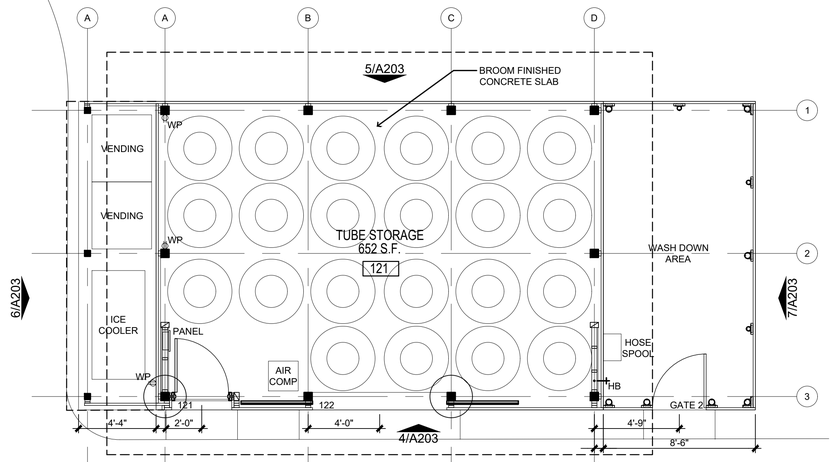


1 TUBE STORAGE FLOOR PLAN
SCALE: 1/4" = 1'-0"

PLAN NORTH TRUE NORTH

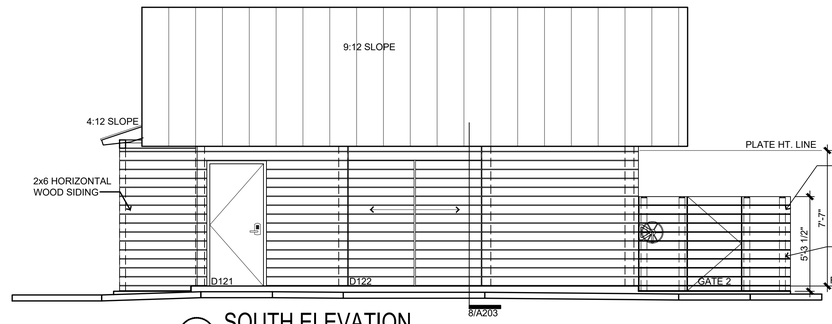


4 SOUTH ELEVATION
SCALE: 1/4" = 1'-0"

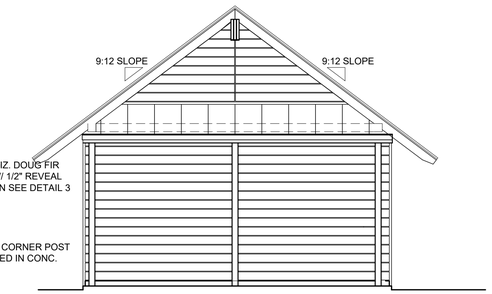


6 WEST ELEVATION
SCALE: 1/4" = 1'-0"

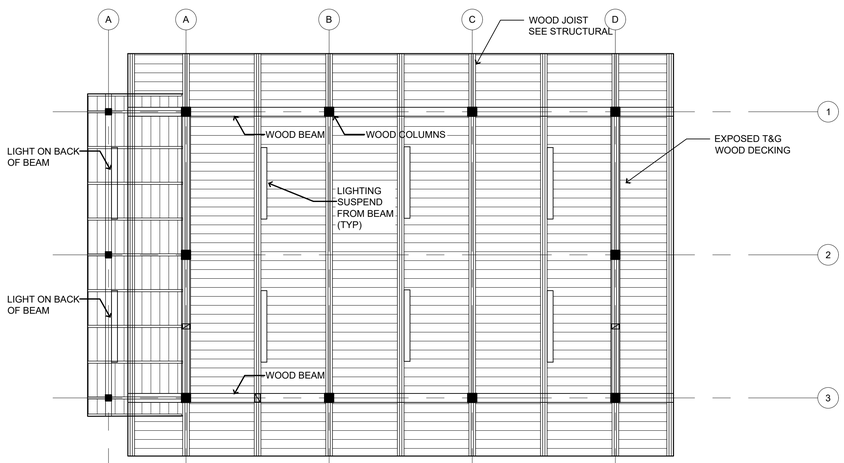


2 TUBE STORAGE RCP
SCALE: 1/4" = 1'-0"

PLAN NORTH TRUE NORTH

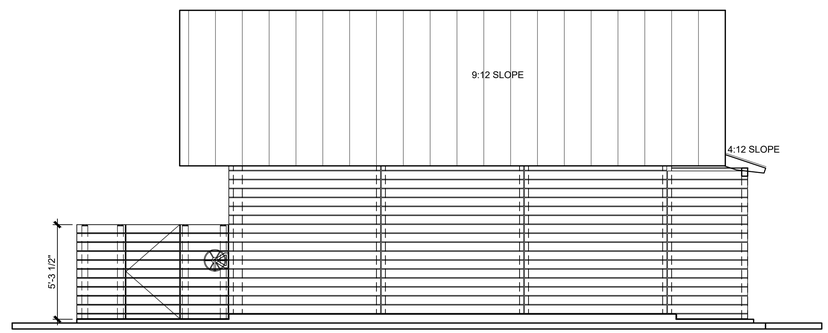


5 NORTH ELEVATION
SCALE: 1/4" = 1'-0"

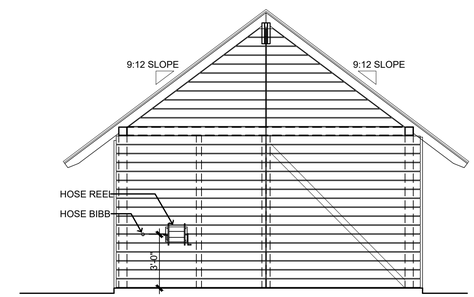


7 EAST ELEVATION
SCALE: 1/4" = 1'-0"

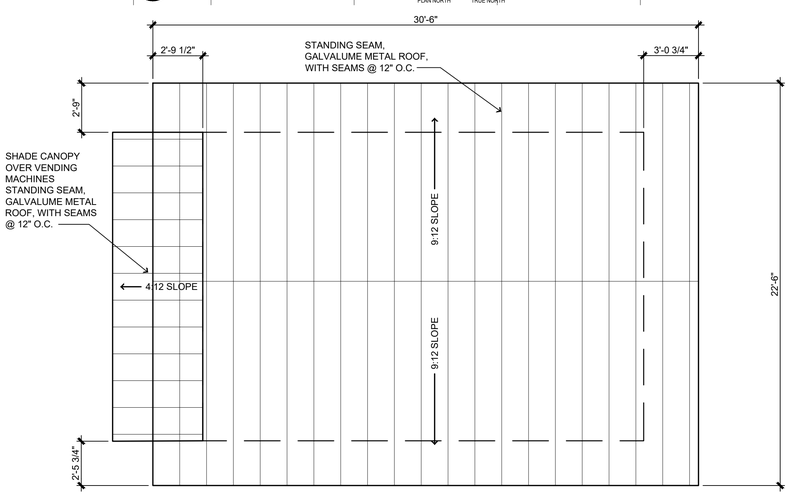


3 TUBE STORAGE ROOF PLAN
SCALE: 1/4" = 1'-0"

PLAN NORTH TRUE NORTH

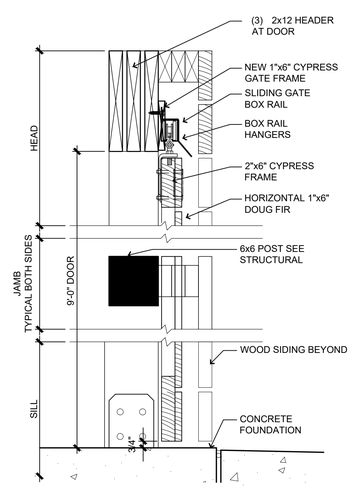


8 DOOR 122 SECTION
SCALE: 1-1/2"=1'-0"

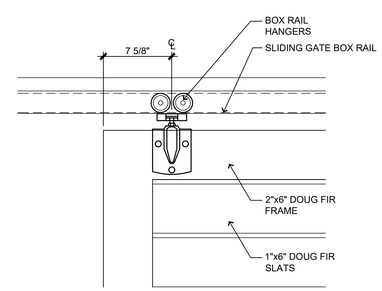


9 HARDWARE DETAIL @ DOOR 122
SCALE: 1-1/2"=1'-0"

FORD POWELL &CARSON
Architects & Planners, Inc.

Architecture
Planning
Preservation
Interior Design

711 Navarro, Suite 400
San Antonio, Texas 78205
210/226-1246
92706

TEXAS PARKS & WILDLIFE

REGISTERED ARCHITECT
RACHEL L. H. WRIGHT
20948
STATE OF TEXAS

# SOUTH LLANO RIVER STATE PARK
## HEADQUARTERS BUILDING RENOVATION AND EXPANSION
PROJECT NUMBER: 134245

DATE: 04.09.2021
DESIGNED BY: NP
DRAWN BY: JK,RF
REVIEWED BY: GC/AC
REVISED:
REVISED:
REVISED:

CONSTRUCTION DOCUMENTS

SHEET TITLE
TUBE STORAGE

SHEET NUMBER
A203

PATH: P:\92706_S_llano_SP\(17) Drawings\(8) CD's 100 Percent\(2) Headquarters\A203.dwg

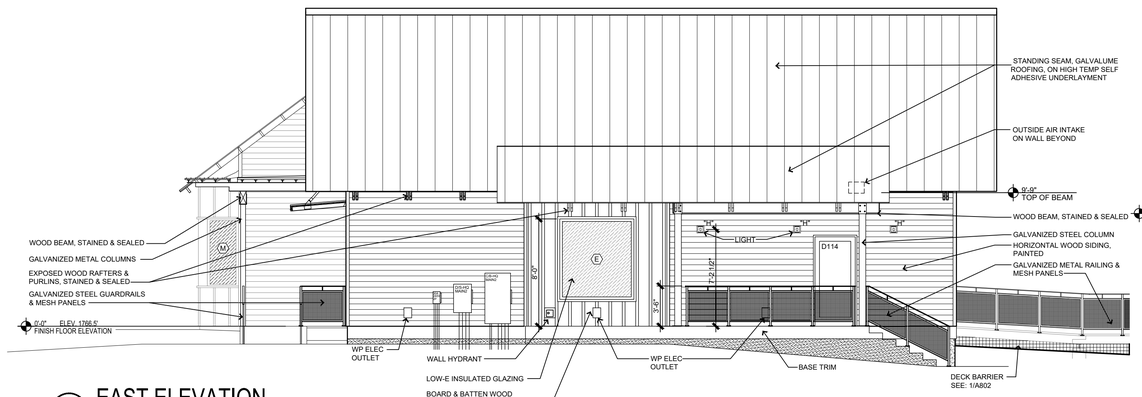


1 EAST ELEVATION
SCALE: 3/16"=1'-0"

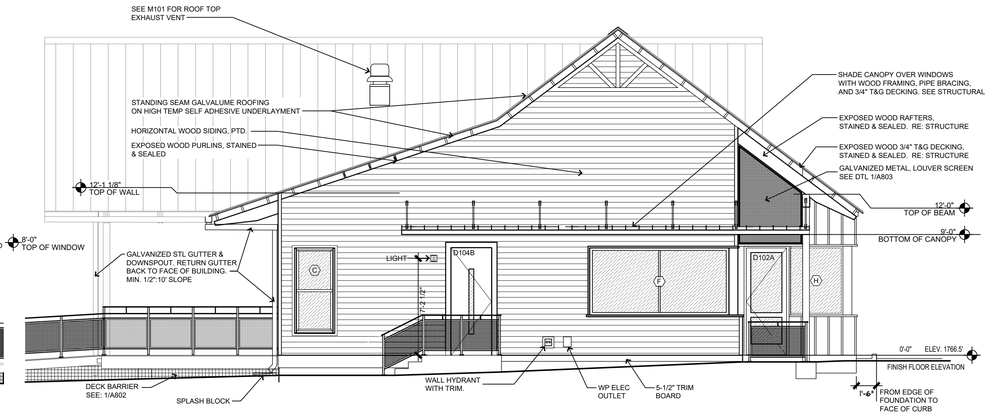


2 WEST ELEVATION
SCALE: 3/16"=1'-0"

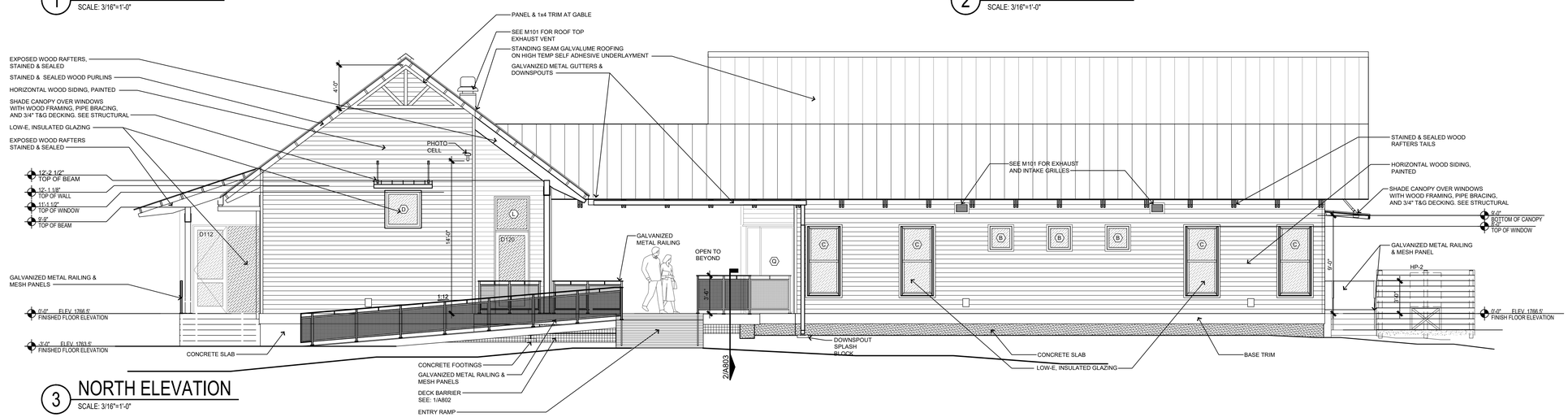


3 NORTH ELEVATION
SCALE: 3/16"=1'-0"

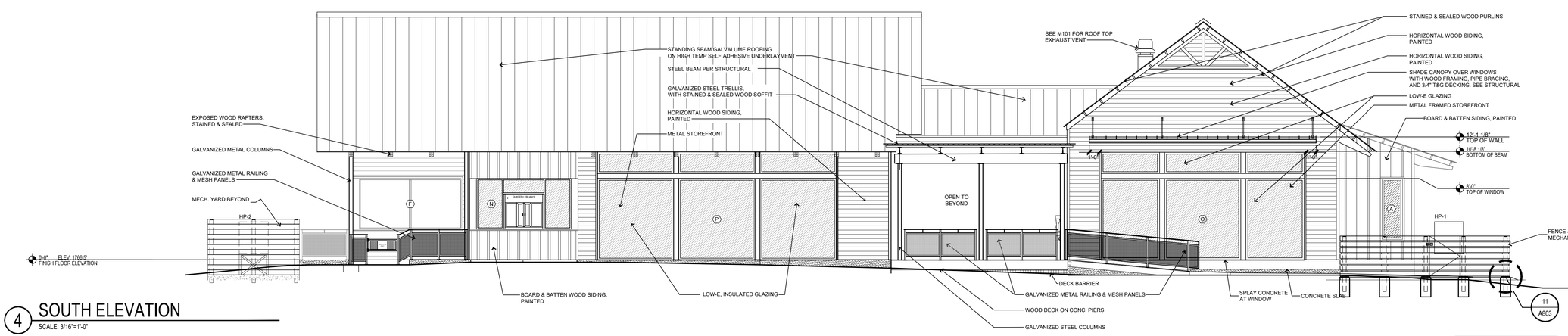


4 SOUTH ELEVATION
SCALE: 3/16"=1'-0"

FORD POWELL &CARSON
Architects & Planners, Inc.
Architecture
Planning
Preservation
Interior Design
711 Navarro, Suite 400
San Antonio, Texas 78205
210/226-1246
92706

TEXAS PARKS & WILDLIFE

REGISTERED ARCHITECT RACHEL L. WRIGHT 20948 STATE OF TEXAS

# SOUTH LLANO RIVER STATE PARK
## HEADQUARTERS BUILDING RENOVATION AND EXPANSION
PROJECT NUMBER: 134245

DATE: 04.09.2021
DESIGNED BY: NP
DRAWN BY: JK,RF
REVIEWED BY: GC/AC
REVISED:
REVISED:
REVISED:

CONSTRUCTION DOCUMENTS

SHEET TITLE
EXTERIOR ELEVATIONS

SHEET NUMBER
A301

PATH: P:\92706_S_llano_SP\(17) Drawings\(8) CD's 100 Percent\(2) Headquarters\A301.dwg

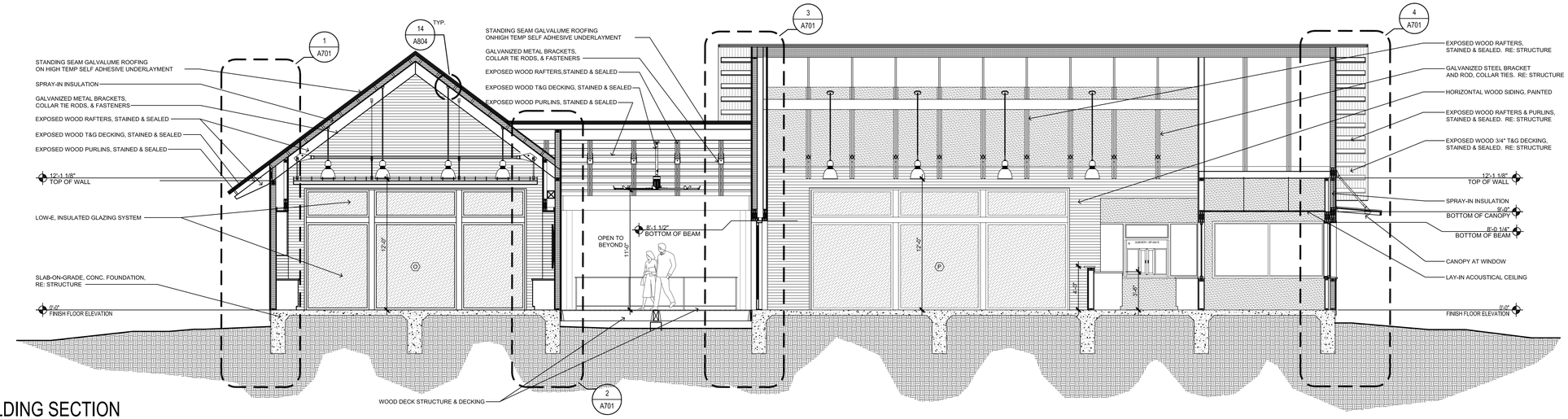


## 1 BUILDING SECTION
SCALE: 3/16"=1'-0"

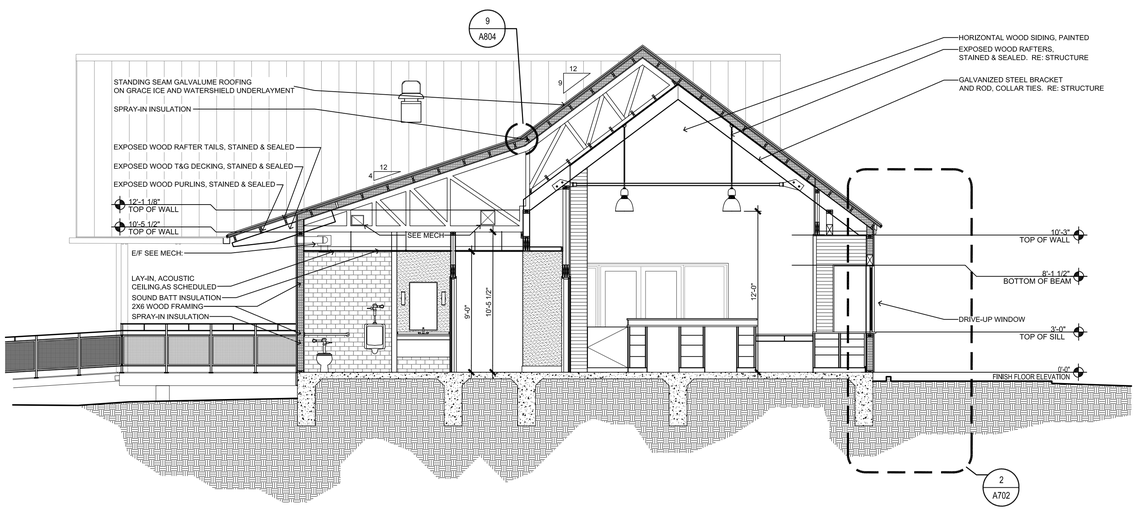


## 2 BUILDING SECTION
SCALE: 3/16"=1'-0"

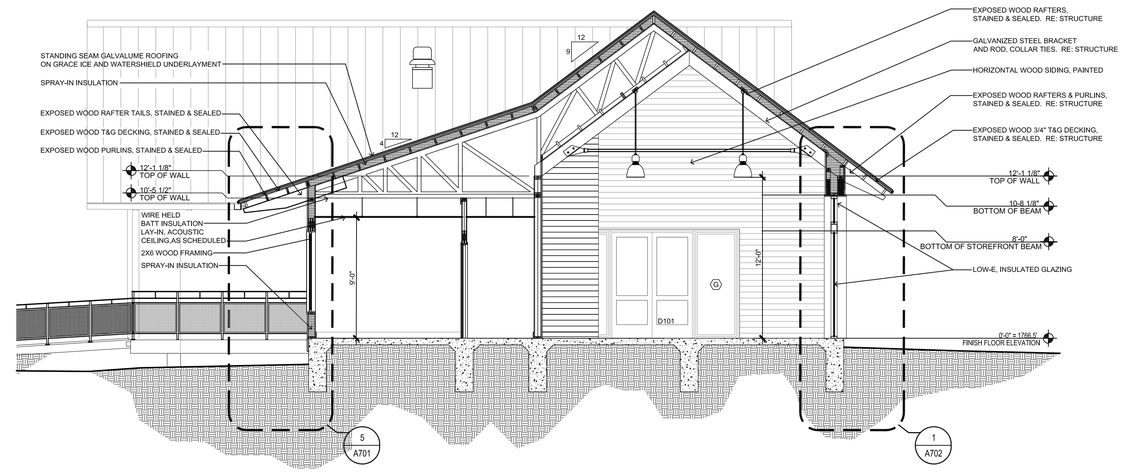


## 3 BUILDING SECTION
SCALE: 3/16"=1'-0"

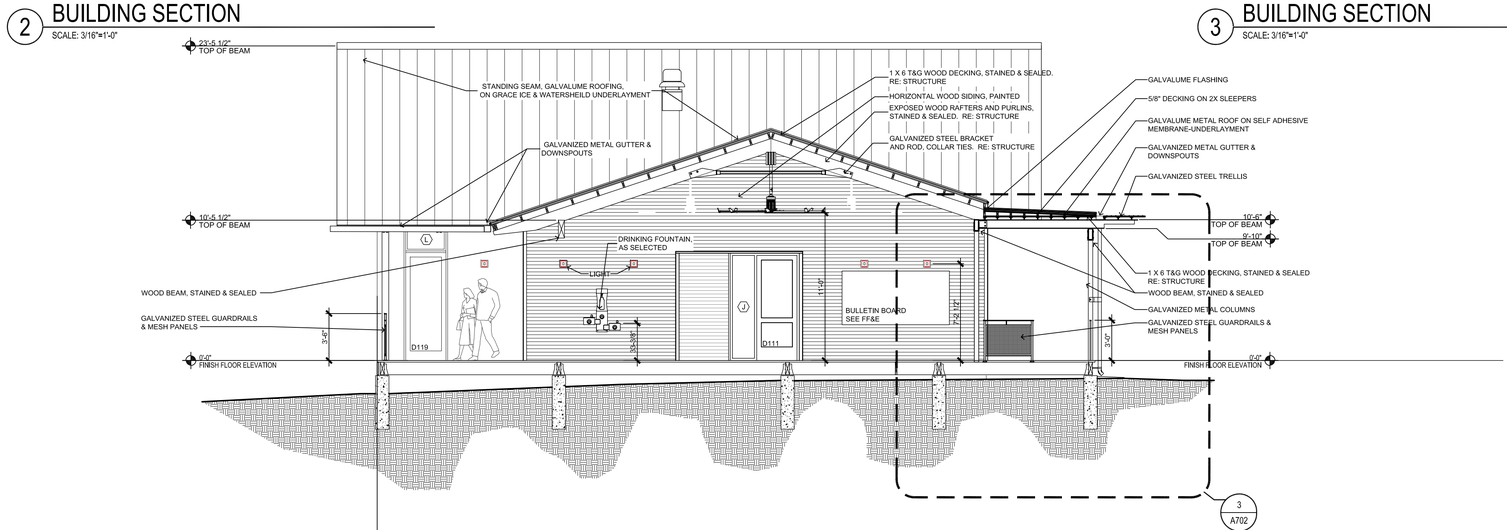


## 4 BUILDING SECTION
SCALE: 3/16"=1'-0"

FORD POWELL & CARSON Architects & Planners, Inc.
Architecture
Planning
Preservation
Interior Design
711 Navarro, Suite 400
San Antonio, Texas 78205
210/226-1246
92706

TEXAS PARKS & WILDLIFE

REGISTERED ARCHITECT RACHEL H. WRIGHT 20948 STATE OF TEXAS

# SOUTH LLANO RIVER STATE PARK
## HEADQUARTERS BUILDING RENOVATION AND EXPANSION
PROJECT NUMBER: 134245

DATE: 04.09.2021
DESIGNED BY: NP
DRAWN BY: JK,RF
REVIEWED BY: GC/AC
REVISED:
REVISED:
REVISED:

CONSTRUCTION DOCUMENTS

SHEET TITLE
BUILDING SECTIONS

SHEET NUMBER
A302

PATH: \\FREENAS\Projects\92706_S_llano_SP\(17) Drawings\(8) CD's 100 Percent\(2) Headquarters\A301.dwg

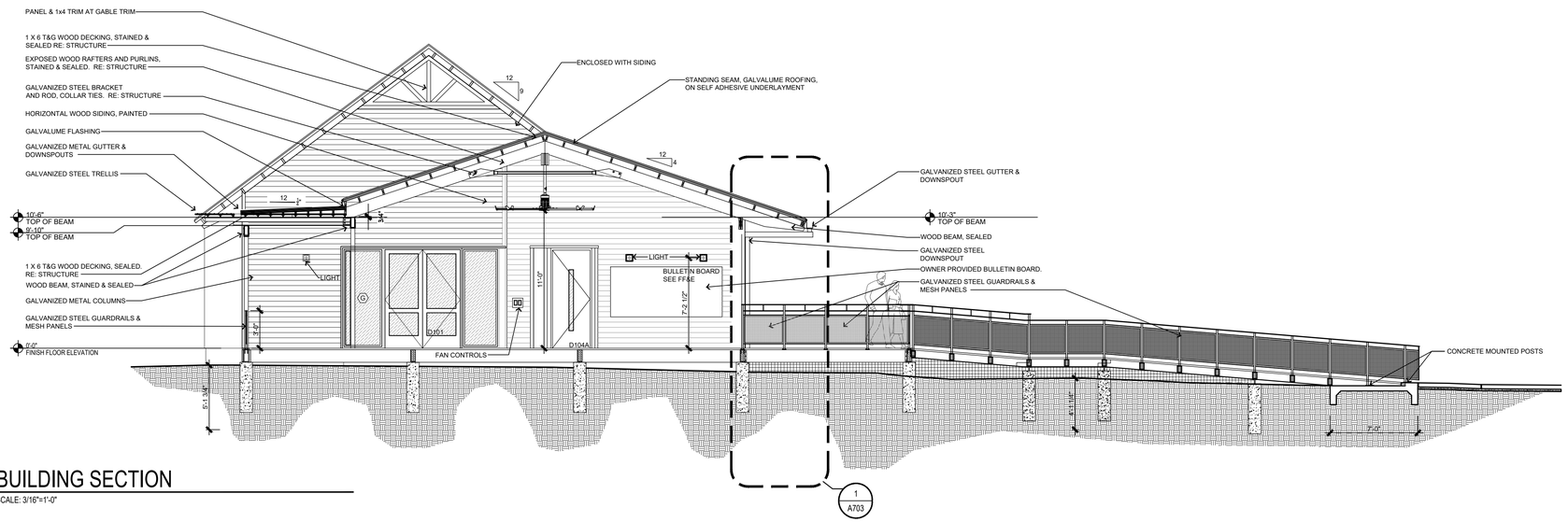


1 BUILDING SECTION
SCALE: 3/16"=1'-0"

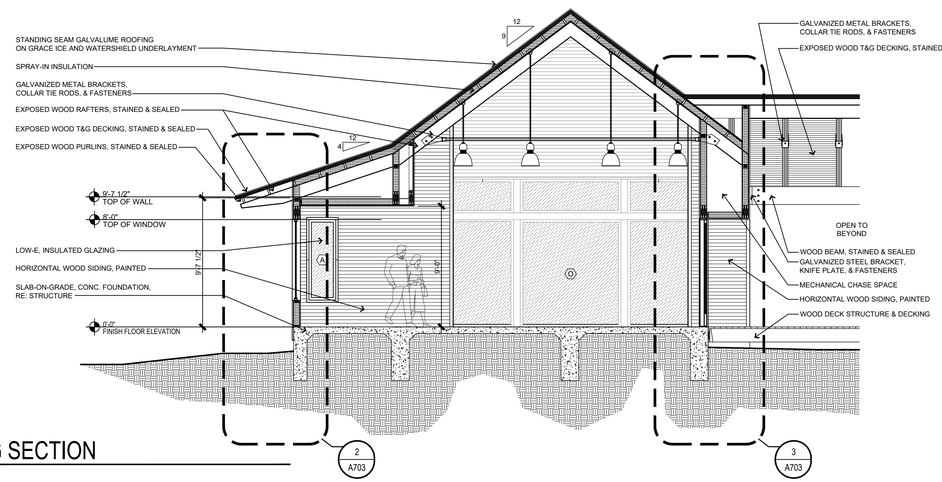


2 BUILDING SECTION
SCALE: 3/16"=1'-0"

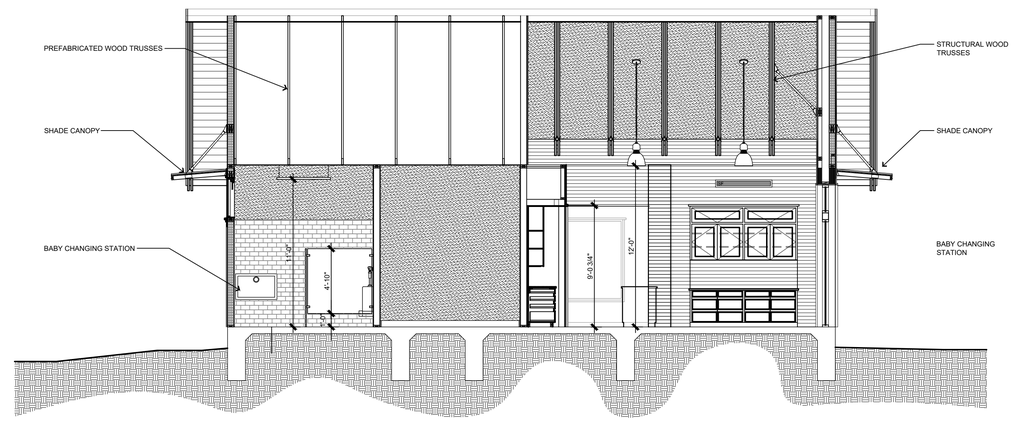


4 BUILDING SECTION
SCALE: 3/16"=1'-0"

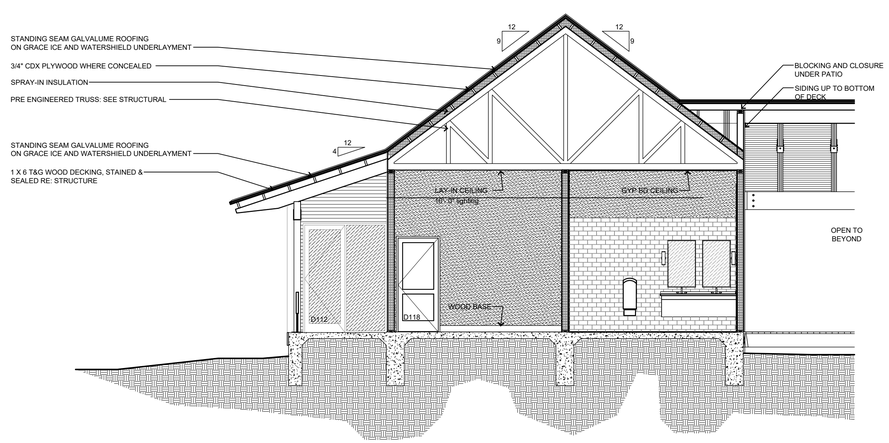


3 BUILDING SECTION
SCALE: 3/16"=1'-0"

TEXAS PARKS & WILDLIFE

REGISTERED ARCHITECT RACHEL L. H. WRIGHT 20948 STATE OF TEXAS

# SOUTH LLANO RIVER STATE PARK
## HEADQUARTERS BUILDING RENOVATION AND EXPANSION
PROJECT NUMBER: 134245

DATE: 04.09.2021
DESIGNED BY: NP
DRAWN BY: JK,RF
REVIEWED BY: GC/AC
REVISED:
REVISED:
REVISED:

CONSTRUCTION DOCUMENTS

SHEET TITLE
BUILDING SECTIONS

SHEET NUMBER
A303

FORD POWELL &CARSON Architects & Planners, Inc.
Architecture
Planning
Preservation
Interior Design
711 Navarro, Suite 400
San Antonio, Texas 78205
210/226-1246
92706

PATH: P:\92706_S_llano_SP\(17) Drawings\(8) CD's 100 Percent\(2) Headquarters\A301.dwg

| ROOM SCHEDULE | | | | | |
|---|---|---|---|---|---|
| NUMBER | NAME | BASE FINISH | FLOOR FINISH | WALL FINISH | CEILING FINISH |
| 100 | DOG TROT | WOOD | WOOD | WOOD | OPEN TO STRUC. |
| 101 | ENTRANCE - INTERPRETIVE EXHIBIT - GIFT SHOP | WOOD | POLISHED CONCRETE | WOOD | PTD. GWB. |
| 102 | STAFF AREA & RECEPTION | WOOD | POLISHED CONCRETE | PTD. GWB. | PTD. GWB. |
| 103 | OFFICE MANAGERS | WOOD | POLISHED CONCRETE | PTD. GWB. | ACT |
| 104 | HALL | WOOD | POLISHED CONCRETE | PTD. GWB./TILE | ACT |
| 105 | PARK MANAGER | WOOD | POLISHED CONCRETE | PTD. GWB. | ACT |
| 106 | STAFF UNISEX RESTROOM | TILE | POLISHED CONCRETEE | TILE/PTD. GWB | ACT |
| 107 | FISCAL CONTROL & STORAGE | WOOD | POLISHED CONCRETE | PTD. GWB. | PTD. GWB. |
| 108 | MECHANICAL | WOOD | POLISHED CONCRETE | PTD. GWB. | PTD. GWB. |
| 109 | ASSISTANT PARK MANAGERS | WOOD | POLISHED CONCRETE | PTD. GWB. | ACT |
| 110 | ELECTRICAL - DATA | WOOD | POLISHED CONCRETE | PTD. GWB. | PTD. GWB. |
| 111 | CONFERENCE ROOM | WOOD | CARPET | PTD. GWB. | PTD. GWB. |
| 112 | BREAK ROOM | WOOD | POLISHED CONCRETE | TILE/PTD. GWB. | PTD. GWB. |
| 113 | PATIO | WOOD | BROOM CONCRETE | WOOD | OPEN TO STRUC. |
| 114 | MECHANICAL | WOOD | BROOM CONCRETE | PTD. GWB. | PTD. GWB. |
| 115 | JANITOR CLOSET | WOOD | POLISHED CONCRETE | FRP PANEL | PTD. GWB. |
| 118 | STORAGE | WOOD | BROOM CONCRETE | PTD. GWB. | ACT |
| 119 | MEN'S RESTROOM | TILE | POLISHED CONCRETE | TILE/PTD. GWB | PTD. GWB. |
| 120 | WOMEN'S RESTROOM | TILE | POLISHED CONCRETE | TILE/PTD. GWB | PTD. GWB. |

| DOOR SCHEDULE | | | | | | | | | |
|---|---|---|---|---|---|---|---|---|---|
| DOOR NUMBER | TYPE | DOOR MATERIAL | FRAME MATERIAL | WIDTH | HEIGHT | THICKNESS | Head | Jamb | Sill |
| 101 | D (Pair) | WOOD/GLASS | ALUM | 6'-0" | 8'-0" | 0'-2" | 1/A805 | 5/A805 | 6/A805 |
| 101A | G | WOOD | WOOD | 3'-0" | 3'-0" | 0'-3" | | | |
| 102A | C | ALUM/GLASS | ALUM | 3'-0" | 8'-0" | 0'-2" | 2/A805 | 6&10/A805 | 15/A805 |
| 102B | A | WD/GLASS | HM | 3'-0" | 8'-0" | 0'-1 3/4" | 3/A805 | 7&11/A805 | NONE |
| 103A | C | ALUM/GLASS | ALUM | 3'-0" | 8'-0" | 0'-2" | 4/A805 | 8&12/A805 | NONE |
| 103B | A | WD/GLASS | HM | 3'-0" | 7'-0" | 0'-1 3/4" | 1/A806 | 5/A806 | NONE |
| 104A | E | HM/GLASS | HM | 3'-0" | 8'-0" | 0'-1 3/4" | 13/A805 | 14/A805 | 16/A805 |
| 104B | E | HM/GLASS | HM | 3'-0" | 8'-0" | 0'-1 3/4" | 13/A805 | 14/A805 | 16/A805 |
| 105 | A | WD/GLASS | HM | 3'-0" | 7'-0" | 0'-1 3/4" | 1/A806 | 5&9/A806 | NONE |
| 106 | B | WD | HM | 3'-0" | 7'-0" | 0'-1 3/4" | 1/A806 | 5&9/A806 | NONE |
| 107 | B | WD | HM | 3'-0" | 7'-0" | 0'-1 3/4" | 1/A806 | 5&9/A806 | NONE |
| 108 | B | WD | HM | 3'-0" | 7'-0" | 0'-1 3/4" | 1/A806 | 5/A806 | NONE |
| 109A | A | WD/GLASS | HM | 3'-0" | 7'-0" | 0'-1 3/4" | 1/A806 | 5&9/A806 | NONE |
| 109B | B | WD | HM | 2'-6" | 7'-0" | 0'-1 3/4" | 1/A806 | 5&9/A806 | NONE |
| 110 | B | WD/LVR | HM | 3'-0" | 7'-0" | 0'-1 3/4" | 1/A806 | 5/A806 | NONE |
| 111 | A | WD/GLASS | HM | 3'-0" | 8'-0" | 0'-2" | 4/A806 | 8/A806 | 16/A805 |
| 112 | C | ALUM/GLASS | ALUM | 3'-0" | 8'-0" | 0'-2" | 2/A806 | 6&10/A806 | 15/A805 |
| 113 | - | - | - | - | - | - | | | |
| 114 | H | HM | HM | 3'-0" | 7'-0" | 0'-1 3/4" | 13/A805 | 14/A805 | 16/A805 |
| 115 | F (Pair) | WOOD PANEL | HM | 4'-0" | 7'-0" | 0'-1 3/4" | 3/A806 | 7/A806 | NONE |
| 116 | - | - | - | - | - | - | | | |
| 118 | B | WD | HM | 3'-0" | 7'-0" | 0'-1 3/4" | 1/A806 | 5&9/A806 | NONE |
| 119 | J | HM | HM | 3'-0" | 7'-6" | 0'-1 3/4" | 13/A805 | 14/A805 | 16/A805 |
| 120 | J | HM | HM | 3'-0" | 7'-6" | 0'-1 3/4" | 13/A805 | 14/A805 | 16/A805 |
| 121 | H | HM | HM | 3'-0" | 7'-0" | 0'-1 3/4" | 13/A805 | 14/A805 | NONE |
| 122 | K (Pair) | WOOD | STEEL | 7'-6" | 7'-0" | 0'-1 3/4" | 8/A203 | 8/A203 | 8/A203 |
| GATE 1 | M | GALV STEEL | GALV STEEL | 3'-0" | 1'-1 1/2" | 0'-1 1/2" | | | |
| GATE 2 | L | WOOD | WOOD | 3'-0" | 5'-3 1/2" | 0'-3" | | | |

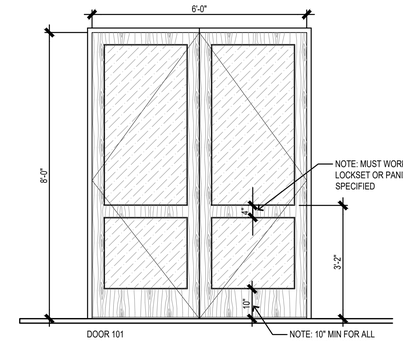


DOOR 101
TYPE "D"

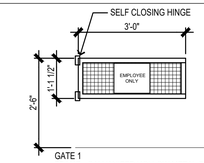


GATE 1
FRAME - GALVANIZED HOLLOW METAL STEEL
GATE - GALVANIZED HOLLOW METAL STEEL
TYPE "M"

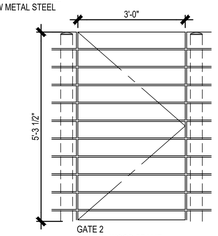


GATE 2
FRAME - WOOD FRAME
GATE - WOOD W/ SLATS
TYPE - "L"

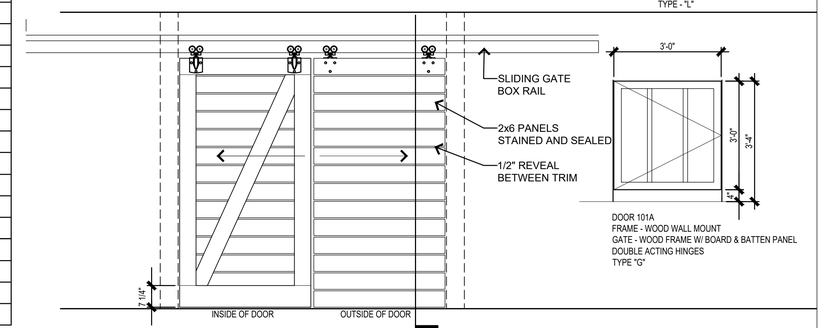


DOOR 122
TYPE - K




DOOR 101A
FRAME - WOOD WALL MOUNT
GATE - WOOD FRAME W/ BOARD & BATTEN PANEL
DOUBLE ACTING HINGES
TYPE "G"

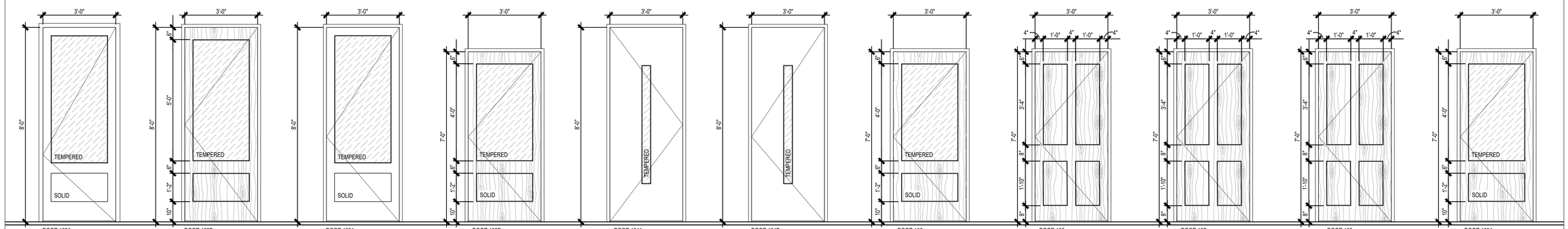


DOOR 102A
TYPE "C"
- ALUMINUM FRAME
- ALUMINUM DOOR
- HALF GLASS LIGHT

DOOR 102B
TYPE "A"
- HOLLOW METAL FRAME
- WOOD DOOR
- HALF GLASS LIGHT

DOOR 103A
TYPE "C"
- ALUMINUM FRAME
- ALUMINUM DOOR
- HALF GLASS LIGHT

DOOR 103B
TYPE "A"
- HOLLOW METAL FRAME
- WOOD DOOR
- HALF GLASS LIGHT

DOOR 104A
TYPE "E"
- HOLLOW METAL FRAME
- HOLLOW METAL DOOR
- NARROW LIGHT

DOOR 104B
TYPE "E"
- HOLLOW METAL FRAME
- HOLLOW METAL DOOR
- NARROW LIGHT

DOOR 105
TYPE "A"
- HOLLOW METAL FRAME
- WOOD DOOR
- HALF GLASS LIGHT

DOOR 106
TYPE "B"
- HOLLOW METAL FRAME
- WOOD DOOR
- 4-PANEL

DOOR 107
TYPE "B"
- HOLLOW METAL FRAME
- WOOD DOOR
- 4-PANEL

DOOR 108
TYPE "B"
- HOLLOW METAL FRAME
- WOOD DOOR
- 4-PANEL

DOOR 109A
TYPE "A"
- HOLLOW METAL FRAME
- WOOD DOOR
- HALF GLASS LIGHT

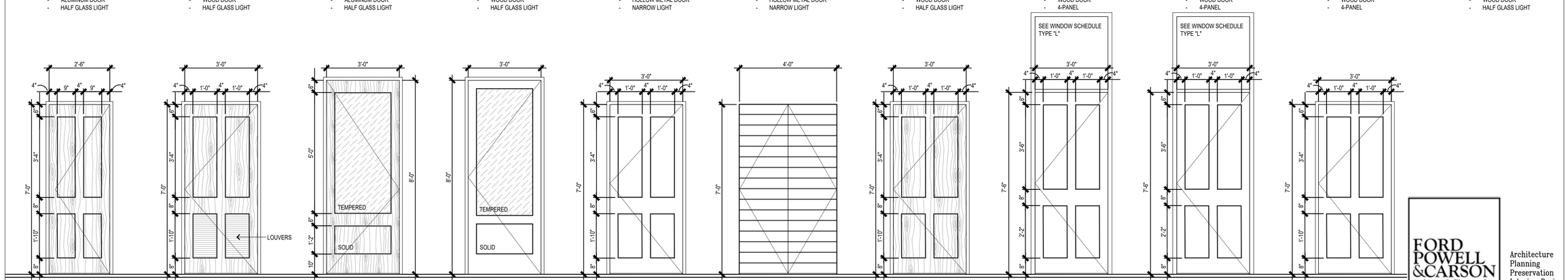


DOOR 109B
TYPE "B"
- HOLLOW METAL FRAME
- WOOD DOOR
- 4-PANEL

DOOR 110
TYPE "B"
- HOLLOW METAL FRAME
- WOOD DOOR
- 4-PANEL
- LOUVERS IN LOWER PANELS

DOOR 111
TYPE "A"
- HOLLOW METAL FRAME
- WOOD DOOR
- HALF GLASS LIGHT

DOOR 112
TYPE "C"
- ALUMINUM FRAME
- ALUMINUM DOOR
- HALF GLASS LIGHT

DOOR 114
TYPE "H" - EXTERIOR
- HOLLOW METAL FRAME
- HOLLOW METAL DOOR
- 4 - PANEL

DOOR 115
TYPE "F"
- HOLLOW METAL FRAME
- WOOD SHIPLAP DOOR
- PAIR OF 2'-0" DOORS

DOOR 118
TYPE "B"
- HOLLOW METAL FRAME
- WOOD DOOR
- 4-PANEL

DOOR 119
TYPE "J" - EXTERIOR
- HOLLOW METAL FRAME
- HOLLOW METAL DOOR
- 4 - PANEL

DOOR 120
TYPE "J" - EXTERIOR
- HOLLOW METAL FRAME
- HOLLOW METAL DOOR
- 4 - PANEL

DOOR 121
TYPE "H" - EXTERIOR
- HOLLOW METAL FRAME
- HOLLOW METAL DOOR
- 4 - PANEL


FORD POWELL &CARSON
Architects & Planners, Inc.
711 Navarro, Suite 400
San Antonio, Texas 78205
210/226-1246
92706


Architecture
Planning
Preservation
Interior Design

TEXAS PARKS & WILDLIFE

REGISTERED ARCHITECT RACHEL H. WRIGHT 20948 STATE OF TEXAS

# SOUTH LLANO RIVER STATE PARK
## HEADQUARTERS BUILDING RENOVATION AND EXPANSION
PROJECT NUMBER: 134245

DATE: 04.09.2021
DESIGNED BY: NP
DRAWN BY: JK,RF
REVIEWED BY: GC/AC
REVISED:
REVISED:
REVISED:

CONSTRUCTION DOCUMENTS

SHEET TITLE
ROOM & DOOR SCHEDULES

SHEET NUMBER
A401

PATH: P:\92706_S_llano_SP\(17) Drawings\(8) CD's 100 Percent\(2) Headquarters\A401.dwg

| WINDOW SCHEDULE | | | | | | | | | |
|---|---|---|---|---|---|---|---|---|---|
| TAG | TYPE | WIDTH | HEIGHT | HEAD | JAMB | SILL | MULLION | U-VALUE | SHGC |
| A | FIXED | 2' - 0" | 6' - 0" | 11/A806 | 14/A806 | 15/A806 | | 0.6496 BTU / (h · ft2 · °H) | 0.78 |
| B | FIXED | 2' - 0" | 2' - 0" | 11/A801 | 12/A801 | 15/A801 | | 0.6496 BTU / (h · ft2 · °H) | 0.78 |
| B | FIXED | 2' - 0" | 2' - 0" | 11/A801 | 12/A801 | 15/A801 | | 0.6496 BTU / (h · ft2 · °H) | 0.78 |
| B | FIXED | 2' - 0" | 2' - 0" | 11/A801 | 12/A801 | 15/A801 | | 0.6496 BTU / (h · ft2 · °H) | 0.78 |
| C | OPERABLE | 3' - 0" | 6' - 0" | 10/A803 | 9/A803 | 12/A803 | 11/A803 | 0.6496 BTU / (h · ft2 · °H) | 0.78 |
| C | OPERABLE | 3' - 0" | 6' - 0" | 10/A803 | 9/A803 | 12/A803 | 11/A803 | 0.6496 BTU / (h · ft2 · °H) | 0.78 |
| C | OPERABLE | 3' - 0" | 6' - 0" | 10/A803 | 9/A803 | 12/A803 | 11/A803 | 0.6496 BTU / (h · ft2 · °H) | 0.78 |
| C | OPERABLE | 3' - 0" | 6' - 0" | 10/A803 | 9/A803 | 12/A803 | 11/A803 | 0.6496 BTU / (h · ft2 · °H) | 0.78 |
| C | OPERABLE | 3' - 0" | 6' - 0" | 10/A803 | 9/A803 | 12/A803 | 11/A803 | 0.6496 BTU / (h · ft2 · °H) | 0.78 |
| D | FIXED | 3' - 0" | 3' - 0" | 11/A801 | 12/A801 | 15/A801 | | 0.6496 BTU / (h · ft2 · °H) | 0.78 |
| E | FIXED | 6' - 0" | 5' - 6" | 11/A806 | 14/A806 | 15/A806 | | 0.6496 BTU / (h · ft2 · °H) | 0.78 |
| F | FIXED | 10' - 4 1/2" | 5' - 0" | 12/A802 | 9/A801 | 13/A802 | | 0.6496 BTU / (h · ft2 · °H) | 0.78 |
| F | FIXED | 10' - 5 3/4" | 5' - 0" | 12/A802 | 9/A801 | 13/A802 | | 0.6496 BTU / (h · ft2 · °H) | 0.78 |
| G | FIXED | 12' - 3" | 8' - 2" | 1/A805 | 4/A801 | 9/A802 | 5/A805 | 0.6496 BTU / (h · ft2 · °H) | 0.78 |
| H | FIXED/DOOR | 7' - 4 1/4" | 8' - 2" | 2/A805 | 9/A801 | 12/A806 | | 0.6496 BTU / (h · ft2 · °H) | 0.78 |
| I | FIXED/DOOR | 10' - 3" | 8' - 2" | 4/A805 | 8/A805 | 12/A806 | | 0.6496 BTU / (h · ft2 · °H) | 0.78 |
| J | FIXED/DOOR | 5' - 0" | 8' - 2" | 4/A806 | 8/A806 | | | 0.6496 BTU / (h · ft2 · °H) | 0.78 |
| K | FIXED/DOOR | 6' - 0" | 8' - 2" | 2/A806 | 10/A806 | | | 0.6496 BTU / (h · ft2 · °H) | 0.78 |
| L | FIXED/DOOR | 3' - 4" | 10' - 7 1/2" | 10/A801 | 14/A801 | | | 0.6496 BTU / (h · ft2 · °H) | 0.78 |
| L | FIXED/DOOR | 3' - 4" | 10' - 7 1/2" | 10/A801 | 14/A801 | | | 0.6496 BTU / (h · ft2 · °H) | 0.78 |
| M | FIXED | 2' - 0" | 5' - 0" | 2/A805 | 2/A801 | 12/A806 | 9/A801 | 0.6496 BTU / (h · ft2 · °H) | 0.78 |
| N | FIXED/SERV DOOR | 9' - 6" | 5' - 0" | 2/A805 | 9/A801 | 13/A806 | | 0.6496 BTU / (h · ft2 · °H) | 0.78 |
| O | FIXED | 20' - 0" | 11' - 0" | 5/A802 | 15/A802 | 9/A802 | 1/A801 | 0.6496 BTU / (h · ft2 · °H) | 0.78 |
| P | FIXED | 23' - 6" | 11' - 0" | 5/A802 | 15/A802 | 9/A802 | 1/A801 | 0.6496 BTU / (h · ft2 · °H) | 0.78 |
| Q | FIXED | 3' - 9 3/4" | 8' - 0" | | | | | 0.6496 BTU / (h · ft2 · °H) | 0.78 |

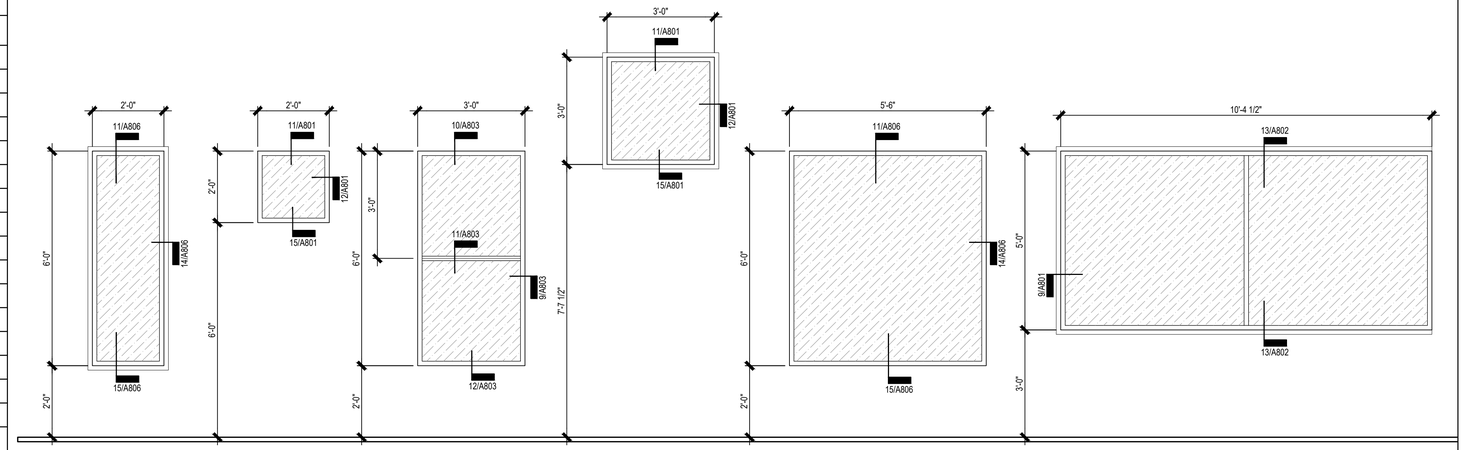


TYPE A
FRAME - ALUMINUM
FIXED
GLASS TYPE 1

TYPE B
FRAME - ALUMINUM
FIXED
GLASS TYPE 1

TYPE C
FRAME - ALUMINUM
OPERABLE
GLASS TYPE 1

TYPE D
FRAME - ALUMINUM
FIXED
GLASS TYPE 1

TYPE E
FRAME - ALUMINUM
FIXED
GLASS TYPE 1

TYPE F
FRAME - ALUMINUM
FIXED
GLASS TYPE 1

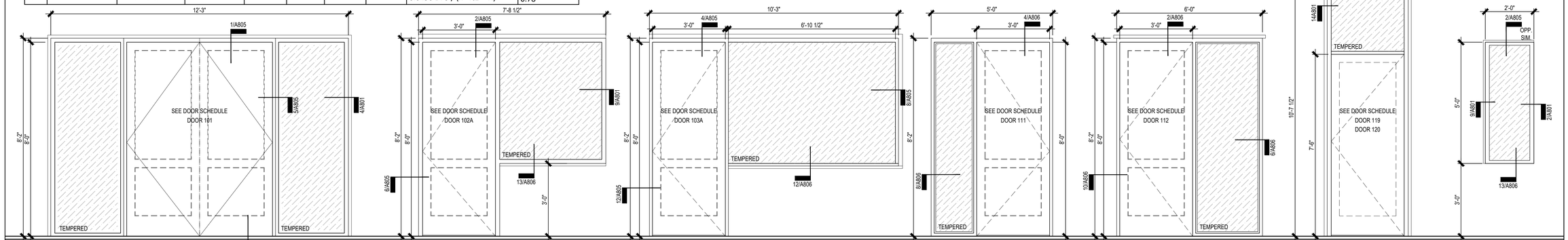


TYPE G
FRAME - ALUMINUM
FIXED
STOREFRONT
GLASS TYPE 2

TYPE H
FRAME - ALUMINUM
FIXED
STOREFRONT
GLASS TYPE 2

TYPE I
FRAME - ALUMINUM
FIXED
STOREFRONT
GLASS TYPE 2

TYPE J
FRAME - ALUMINUM
FIXED
STOREFRONT
GLASS TYPE 2

TYPE K
FRAME - ALUMINUM
FIXED
STOREFRONT
GLASS TYPE 2

TYPE L
FRAME - ALUMINUM
FIXED
STOREFRONT
GLASS TYPE 2

TYPE M
FRAME - ALUMINUM
FIXED
GLASS TYPE 1

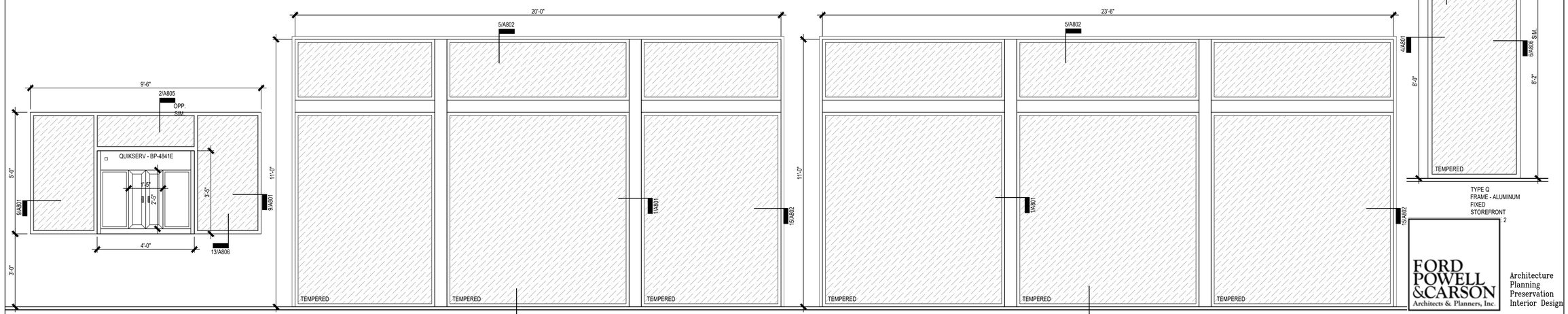


TYPE N
FRAME - ALUMINUM
FIXED
GLASS TYPE 1

TYPE O
FRAME - ALUMINUM
FIXED
GLASS TYPE 1 & 2

TYPE P
FRAME - ALUMINUM
FIXED
GLASS TYPE 1 & 2

TYPE Q
FRAME - ALUMINUM
FIXED
STOREFRONT
GLASS TYPE 2


FORD POWELL &CARSON
Architects & Planners, Inc.

Architecture
Planning
Preservation
Interior Design

711 Navarro, Suite 400
San Antonio, Texas 78205
210/226-1246
92706


TEXAS PARKS & WILDLIFE

REGISTERED ARCHITECT
RACHEL H. WRIGHT
20948
STATE OF TEXAS

# SOUTH LLANO RIVER STATE PARK
## HEADQUARTERS BUILDING RENOVATION AND EXPANSION
PROJECT NUMBER: 134245

DATE: 04.09.2021
DESIGNED BY: NP
DRAWN BY: JK,RF
REVIEWED BY: GC/AC
REVISED:
REVISED:
REVISED:

CONSTRUCTION DOCUMENTS

SHEET TITLE
WINDOW SCHEDULE

SHEET NUMBER
A402

PATH: P:\92706_S_llano_SP\(17) Drawings\(8) CD's 100 Percent\(2) Headquarters\A402.dwg

## CEILING FINISH LEGEND

- CEILING TILES
- GYP. BOARD FINISH
- WOOD PLANK FINISH
- HVAC SUPPLY
- HVAC RETURN

## LIGHT FIXTURE LEGEND

- RECESSED LINEAR FIXTURE
- SURFACE MOUNT LINEAR FIXTURE
- LARGE PENDENT
- PENDENT
- ADJUSTABLE SURACE MOUNT MONOPOINT
- RECESSED LIGHT FIXTURE
- WALL MOUNT FIXTURE
- FAN

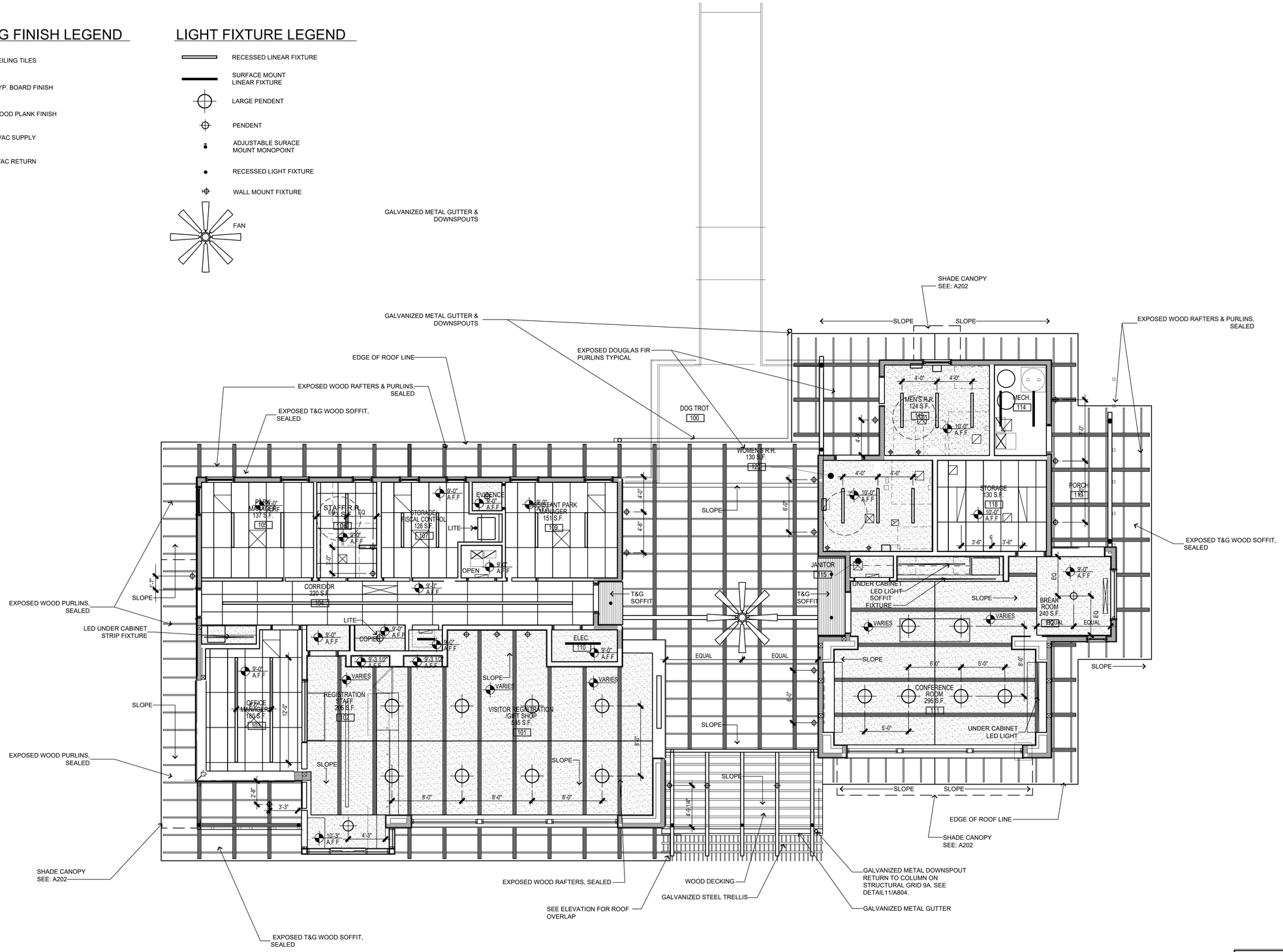


1 REFLECTED CEILING PLAN

SCALE: 3/16"=1'-0"

PLAN NORTH TRUE NORTH

TEXAS PARKS & WILDLIFE

REGISTERED ARCHITECT RACHEL L. H. WRIGHT 20948 STATE OF TEXAS

# SOUTH LLANO RIVER STATE PARK
## HEADQUARTERS BUILDING RENOVATION AND EXPANSION
PROJECT NUMBER: 134245

DATE: 04.09.2021
DESIGNED BY: NP
DRAWN BY: JK,RF
REVIEWED BY: GC/AC
REVISED:
REVISED:
REVISED:

CONSTRUCTION DOCUMENTS

SHEET TITLE
REFLECTED CEILING PLAN

SHEET NUMBER
A501


FORD POWELL &CARSON Architects & Planners, Inc.
Architecture
Planning
Preservation
Interior Design
711 Navarro, Suite 400
San Antonio, Texas 78205
210/226-1246
92706


PATH: P:\92706_S_llano_SP\(17) Drawings\(8) CD's 100 Percent\(2) Headquarters\A501.dwg

## RM - 100 DOG TROTT

| | |
|---|---|
| BB1: BULLETIN BOARD | QUANTITY: 2 |
| B1:BENCH | QUANTITY: 2 |

## RM - 101 VISITOR REGISTRATION / GIFT SHOP

| | |
|---|---|
| WS4: 96 x 132 WINDOW SHADE | QUANTITY: 1 |
| WS5: 93 x 132 WINDOW SHADE | QUANTITY: 2 |

## RM - 102 REGISTRATION STAFF

| | |
|---|---|
| C1: ROLLING CHAIR | QUANTITY: 3 |

## RM - 103 OFFICE MANAGERS

| | |
|---|---|
| C1: ROLLING CHAIR | QUANTITY: 2 |
| D1: RIGHT HAND DESK | QUANTITY: 1 |
| D2: LEFT HAND DESK | QUANTITY: 1 |
| D4: LEFT DESK RETURN | QUANTITY: 1 |
| WS3: 122 x 60 WINDOW SHADE | QUANTITY: 2 |

## RM - 104 WET BAR

| | |
|---|---|
| UCF1: UNDER COUNTER FRIDGE | QUANTITY: 1 |

## RM - 105 PARK MANAGER

| | |
|---|---|
| C1: ROLLING CHAIR | QUANTITY: 1 |
| C2: GUEST CHAIR | QUANTITY: 4 |
| D2: LEFT HAND DESK | QUANTITY: 1 |
| D3: RIGHT DESK RETURN | QUANTITY: 1 |
| F2: FILING CABINET | QUANTITY: 4 |
| T2: TABLE TOP | QUANTITY: 1 |
| WS1: 36 x 76.5 WINDOW SHADE | QUANTITY: 3 |

## RM - 107 FISCAL CONTROL

| | |
|---|---|
| WS1: 36 x 76.5 WINDOW SHADE | QUANTITY: 2 |

## RM - 109 ASSIST. PARK MANAGER

| | |
|---|---|
| C1: ROLLING CHAIR | QUANTITY: 1 |
| C2: GUEST CHAIR | QUANTITY: 1 |
| D1: RIGHT HAND DESK | QUANTITY: 1 |
| D4: LEFT DESK RETURN | QUANTITY: 1 |
| F2: FILING CABINET | QUANTITY: 4 |
| WS1: 36 x 76.5 WINDOW SHADE | QUANTITY: 2 |

## RM - 111 CONFERENCE ROOM

| | |
|---|---|
| T1: CONFERENCE TABLE | QUANTITY: 1 |
| C3: EXECUTIVE CHAIR | QUANTITY: 12 |
| M1: MICROWAVE | QUANTITY: 1 |
| REF: REFRIGERATOR | QUANTITY: 1 |
| TV1: TELEVISION | QUANTITY: 1 |
| TV2: SOUNDBAR | QUANTITY: 1 |
| WS4: 96 x 132 WINDOW SHADE | QUANTITY: 1 |
| WS6: 72 x 132 WINDOW SHADE | QUANTITY: 2 |

## RM - 112 BREAK ROOM

| | |
|---|---|
| C2: GUEST CHAIR | QUANTITY: 4 |
| T2: TABLE TOP | QUANTITY: 1 |
| WS2: 66 x 72 WINDOW SHADE | QUANTITY: 1 |

## RM - 113 PORCH

| | |
|---|---|
| C4: EXTERIOR CHAIR | QUANTITY: 4 |
| T3: EXTERIOR TABLE TOP | QUANTITY: 1 |

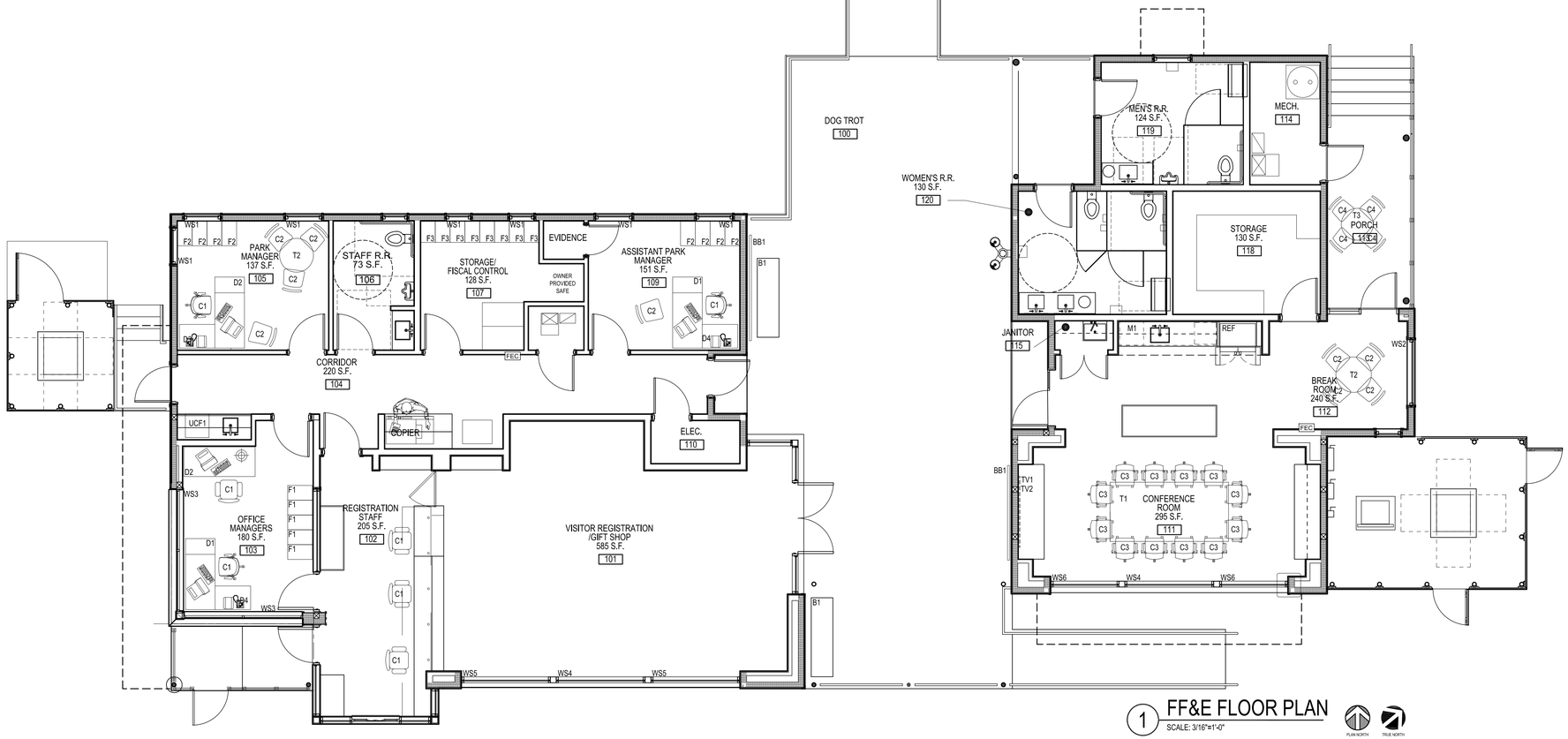


1 FF&E FLOOR PLAN
SCALE: 3/16"=1'-0"

PLAN NORTH TRUE NORTH


FORD POWELL &CARSON
Architects & Planners, Inc.
Architecture
Planning
Preservation
Interior Design
711 Navarro, Suite 400
San Antonio, Texas 78205
210/226-1246
92706


TEXAS PARKS & WILDLIFE

REGISTERED ARCHITECT RACHEL L. H. WRIGHT 20948 STATE OF TEXAS

# SOUTH LLANO RIVER STATE PARK
## HEADQUARTERS BUILDING RENOVATION AND EXPANSION
PROJECT NUMBER: 134245

DATE: 04.09.2021
DESIGNED BY: NP
DRAWN BY: JK,RF
REVIEWED BY: GC/AC
REVISED:
REVISED:
REVISED:

CONSTRUCTION DOCUMENTS

SHEET TITLE
FURNITURE PLAN

SHEET NUMBER
A502

PATH: \\FREENAS\Projects\92706_S_llano_SP\(17) Drawings\(8) CD's 100 Percent\(2) Headquarters\A502 - FFE.dwg

| Line | Model | | Qty. |
|---|---|---|---|
| **Tag 1: Room 102** | | | |
| 1.1 | DN5B11 | Doni Task Cantilever Armchair,Uph Seat,Two-Tone | 3 |

| | | |
|---|---|---|
| **Two-Tone Poly Color** | **To Be Determined** | **TBD<<** |
| Base Color | Black | /BL |
| Caster Option | Hard floor casters | /CHC |
| Seat Upholstery | Compliance to TB 117-2013 | /NFR |
| Doni Upholstery NFR | Fabric Grade 1 | GRD1 |
| G1 Fabric | 1S STREETSCAP | 1SUPHSTREET SCAP |
| 1S STREETSCAP | TUXEDO | /1STO |

**MK: C1**
**Price Description: Delivered/Open Market**
**Lead Time: 5 - 7 Weeks; Ships from GREEN BAY, WI**
**Please Note: Leadtime calculated on 12/11/2020 and is subject to change.**

Tag 1: Room 102

| Line | Model | | Qty. |
|---|---|---|---|
| **Tag 1: Room 103** | | | |
| 2.1 | DN5B11 | Doni Task Cantilever Armchair,Uph Seat,Two-Tone | 2 |

| | | |
|---|---|---|
| **Two-Tone Poly Color** | **To Be Determined** | **TBD<<** |
| Base Color | Black | /BL |
| Caster Option | Hard floor casters | /CHC |
| Seat Upholstery | Compliance to TB 117-2013 | /NFR |
| Doni Upholstery NFR | Fabric Grade 1 | GRD1 |
| G1 Fabric | 1S STREETSCAP | 1SUPHSTREET SCAP |
| 1S STREETSCAP | TUXEDO | /1STO |

**MK: C1**
**Price Description: Delivered/Open Market**
**Lead Time: 5 - 7 Weeks; Ships from GREEN BAY, WI**
**Please Note: Leadtime calculated on 12/11/2020 and is subject to change.**

2.2 **KSPR7230A.H** Aristotle Single Ped Desk,Full MP,BF Ped RT,72x30" 1

| | | |
|---|---|---|
| Laminate (Horizontal) | White | /LWT |
| Laminate Base (Vertical) | Light Grey | /LBLG |
| End Panel Option | Full end panel both sides | /FULL |
| File Pull | Standard integral pull | /NP |
| Key Option | Key standard - 1 lock | /KS |

**MK: D2**
**Price Description: Delivered/Open Market**
**Lead Time: 2 - 4 Weeks; Ships from BRAMPTON, ON**
**Please Note: Leadtime calculated on 12/11/2020 and is subject to change.**

2.3 **KSPL8436A.H** Aristotle Single Ped Desk,Full MP,BF Ped LT,84x36" 1

| | | |
|---|---|---|
| Laminate (Horizontal) | White | /LWT |
| Laminate Base (Vertical) | Light Grey | /LBLG |
| End Panel Option | Full end panel both sides | /FULL |
| File Pull | Standard integral pull | /NP |
| Key Option | Key standard - 1 lock | /KS |

**MK: D1**
**Price Description: Delivered/Open Market**
**Lead Time: 2 - 4 Weeks; Ships from BRAMPTON, ON**
**Please Note: Leadtime calculated on 12/11/2020 and is subject to change.**

2.4 **KRAL4824.H** Aristotle Return,Alum Wave Profile,48x24" 1

| | | |
|---|---|---|
| Laminate (Horizontal) | White | /LWT |

**MK: D3**
**Price Description: Delivered/Open Market**
**Lead Time: 2 - 4 Weeks; Ships from BRAMPTON, ON**
**Please Note: Leadtime calculated on 12/11/2020 and is subject to change.**

Tag 1: Room 103

| Line | Model | | Qty. |
|---|---|---|---|
| **Tag 1: Room 105** | | | |
| 3.1 | DN5B11 | Doni Task Cantilever Armchair,Uph Seat,Two-Tone | 1 |

| | | |
|---|---|---|
| **Two-Tone Poly Color** | **To Be Determined** | **TBD<<** |
| Base Color | Black | /BL |
| Caster Option | Hard floor casters | /CHC |
| Seat Upholstery | Compliance to TB 117-2013 | /NFR |
| Doni Upholstery NFR | Fabric Grade 1 | GRD1 |
| G1 Fabric | 1S STREETSCAP | 1SUPHSTREET SCAP |
| 1S STREETSCAP | TUXEDO | /1STO |

**MK: C1**
**Price Description: Delivered/Open Market**
**Lead Time: 5 - 7 Weeks; Ships from GREEN BAY, WI**
**Please Note: Leadtime calculated on 12/11/2020 and is subject to change.**

3.2 **DNWB00** Doni Tapered Wood Leg Armless Chair,Uph Seat,Two-Tone 4

| | | |
|---|---|---|
| **Two-Tone Poly Color** | **To Be Determined** | **TBD<<** |
| Wood Finish | Florence Walnut on Beech | /BFC |
| Glide Option | Plastic glides | /GPL |
| Seat Upholstery | Compliance to TB 117-2013 | /NFR |
| Doni Upholstery NFR | Fabric Grade 1 | GRD1 |
| G1 Fabric | 1S STREETSCAP | 1SUPHSTREET SCAP |
| 1S STREETSCAP | CACTUS SAND | /1SCD |

**MK: C2**
**Price Description: Delivered/Open Market**
**Lead Time: 5 - 7 Weeks; Ships from GREEN BAY, WI**
**Please Note: Leadtime calculated on 12/11/2020 and is subject to change.**

3.3 **KSPL7230A.H** Aristotle Single Ped Desk,Full MP,BF Ped LT,72x30" 1

| | | |
|---|---|---|
| Laminate (Horizontal) | White | /LWT |
| Laminate Base (Vertical) | Light Grey | /LBLG |
| End Panel Option | Full end panel both sides | /FULL |
| File Pull | Standard integral pull | /NP |
| Key Option | Key standard - 1 lock | /KS |

**MK: D2**
**Price Description: Delivered/Open Market**
**Lead Time: 2 - 4 Weeks; Ships from BRAMPTON, ON**
**Please Note: Leadtime calculated on 12/11/2020 and is subject to change.**

3.4 **KRAL4824.H** Aristotle Return,Alum Wave Profile,48x24" 1

| | | |
|---|---|---|
| Laminate (Horizontal) | White | /LWT |

**MK: D3**
**Price Description: Delivered/Open Market**
**Lead Time: 2 - 4 Weeks; Ships from BRAMPTON, ON**
**Please Note: Leadtime calculated on 12/11/2020 and is subject to change.**

3.5 **BR3FX-74P** Barron Fixed Leg,Round,X Base,74P Edge,36"Dia 1

| | | |
|---|---|---|
| Edge Color | Zesty Lime edge | /EZL |
| Surface Finish | KI Laminates | Standard |
| KI Laminates | FLORENCE WALNUT 7993-38 | /LFC |
| Base Finish | Chocolate | /CT |
| Base Options | No casters | -NCST |
| Table Height Other Than 29" | Standard height (29") | -NO |

**MK: T2**
**Price Description: Delivered/Open Market**
**Lead Time: 2 - 4 Weeks; Ships from GREEN BAY, WI**

| Line | Model | | Qty. |
|---|---|---|---|
| **Tag 1: Room 109** | | | |
| 4.1 | DN5B11 | Doni Task Cantilever Armchair,Uph Seat,Two-Tone | 1 |

| | | |
|---|---|---|
| **Two-Tone Poly Color** | **To Be Determined** | **TBD<<** |
| Base Color | Black | /BL |
| Caster Option | Hard floor casters | /CHC |
| Seat Upholstery | Compliance to TB 117-2013 | /NFR |
| Doni Upholstery NFR | Fabric Grade 1 | GRD1 |
| G1 Fabric | 1S STREETSCAP | 1SUPHSTREET SCAP |
| 1S STREETSCAP | TUXEDO | /1STO |

**MK: C1**
**Price Description: Delivered/Open Market**
**Lead Time: 5 - 7 Weeks; Ships from GREEN BAY, WI**
**Please Note: Leadtime calculated on 12/11/2020 and is subject to change.**

4.2 **DNWB00** Doni Tapered Wood Leg Armless Chair,Uph Seat,Two-Tone 4

| | | |
|---|---|---|
| **Two-Tone Poly Color** | **To Be Determined** | **TBD<<** |
| Wood Finish | Florence Walnut on Beech | /BFC |
| Glide Option | Plastic glides | /GPL |
| Seat Upholstery | Compliance to TB 117-2013 | /NFR |
| Doni Upholstery NFR | Fabric Grade 1 | GRD1 |
| G1 Fabric | 1S STREETSCAP | 1SUPHSTREET SCAP |
| 1S STREETSCAP | CACTUS SAND | /1SCD |

**MK: C2**
**Price Description: Delivered/Open Market**
**Lead Time: 5 - 7 Weeks; Ships from GREEN BAY, WI**
**Please Note: Leadtime calculated on 12/11/2020 and is subject to change.**

4.3 **KSPR7230A.H** Aristotle Single Ped Desk,Full MP,BF Ped RT,72x30" 1

| | | |
|---|---|---|
| Laminate (Horizontal) | White | /LWT |
| Laminate Base (Vertical) | Light Grey | /LBLG |
| End Panel Option | Full end panel both sides | /FULL |
| File Pull | Standard integral pull | /NP |
| Key Option | Key standard - 1 lock | /KS |

**MK: D1**
**Price Description: Delivered/Open Market**
**Lead Time: 2 - 4 Weeks; Ships from BRAMPTON, ON**
**Please Note: Leadtime calculated on 12/11/2020 and is subject to change.**

4.4 **KRAL4824.H** Aristotle Return,Alum Wave Profile,48x24" 1

| | | |
|---|---|---|
| Laminate (Horizontal) | White | /LWT |

**MK: D3**
**Price Description: Delivered/Open Market**
**Lead Time: 2 - 4 Weeks; Ships from BRAMPTON, ON**
**Please Note: Leadtime calculated on 12/11/2020 and is subject to change.**

Tag 1: Room 109

| Line | Model | | Qty. |
|---|---|---|---|
| **Tag 1: Room 111** | | | |
| 5.1 | SIFTUNA | Sift Task Armless Chair,Upholstered Seat | 12 |

| | | |
|---|---|---|
| Base Finish | Black plastic base | /P |
| Casters | Hard floor casters | /S |
| Upholstery Grade/Color | Compliance to TB 117-2013 | /NFR |
| Sift Upholstery NFR | Pallas Fabric Group P1 | GRPP1 |
| P1 Pallas Fabric | CHITRA | CHITRA |
| CHITRA | LAVA | /27.178.048.P |

**MK: C3**
**Price Description: Delivered/Open Market**
**Lead Time: 4 - 6 Weeks; Ships from TUPELO, MS**
**Please Note: Leadtime calculated on 12/11/2020 and is subject to change.**

Tag 1: Room 111

| Line | Model | | Qty. |
|---|---|---|---|
| **Tag 1: Room 112** | | | |
| 6.1 | DNWB00 | Doni Tapered Wood Leg Armless Chair,Uph Seat,Two-Tone | 4 |

| | | |
|---|---|---|
| **Two-Tone Poly Color** | **To Be Determined** | **TBD<<** |
| Wood Finish | Florence Walnut on Beech | /BFC |
| Glide Option | Plastic glides | /GPL |
| Seat Upholstery | Compliance to TB 117-2013 | /NFR |
| Doni Upholstery NFR | Fabric Grade 1 | GRD1 |
| G1 Fabric | 1S STREETSCAP | 1SUPHSTREET SCAP |
| 1S STREETSCAP | CACTUS SAND | /1SCD |

**MK: C2**
**Price Description: Delivered/Open Market**
**Lead Time: 5 - 7 Weeks; Ships from GREEN BAY, WI**
**Please Note: Leadtime calculated on 12/11/2020 and is subject to change.**

6.2 **BR3FX-74P** Barron Fixed Leg,Round,X Base,74P Edge,36"Dia 1

| | | |
|---|---|---|
| Edge Color | Zesty Lime edge | /EZL |
| Surface Finish | KI Laminates | Standard |
| **KI Laminates** | **To Be Determined** | **TBD<<** |
| Base Finish | Chocolate | /CT |
| Base Options | No casters | -NCST |
| Table Height Other Than 29" | Standard height (29") | -NO |

**MK: T2**
**Price Description: Delivered/Open Market**
**Lead Time: 2 - 4 Weeks; Ships from GREEN BAY, WI**
**Please Note: Leadtime calculated on 12/11/2020 and is subject to change.**

Tag 1: Room 112

**NOTES:**

- Images shown above are intended for approximate visual reference only and may not represent the exact models, numbers, descriptions or options selected. Refer to the model number/description/options shown for full product specifications.
- Sales Tax (For Shipment within the United States Only): Estimated sales/use tax will be calculated when order is entered. It is the customer's responsibility to pay any applicable sales/use tax due upon invoicing. A customer will not be charged sales tax if (1) a Resale Certificate, (2) an Exempt Organization Certificate, or (3) a Direct Pay permit is on file with KI's Finance Department. If no certificate is on file, the appropriate sales/use tax rate in effect at shipment will be applied and tax will be added to the customer's invoice.

**PROJECT LEAD TIME SUMMARY:**

- Manufacturing lead time begins once the order is complete and acknowledged. Delivery dates are determined per order based on the longest lead time per shipping location and are confirmed on the order acknowledgement.

| Shipping Location | MFG Lead Time Range |
|---|---|
| BRAMPTON, ON | 2 - 4 Weeks |
| TUPELO, MS | 4 - 6 Weeks |
| GREEN BAY, WI | 5 - 7 Weeks |

- Lead times are subject to change based on quantities, manufacturing capacity and surface material selections. Laminate and/or fabrics outside the standard KI Ingrade program may have extended lead time.
- For more information or questions regarding delivery consolidation, contact KI Customer Service.

## BB-1 BULLETIN BOARD

| Manufacturer | Model | Room: Number | Room: Name | QTY |
|---|---|---|---|---|
| ALLEN DISPLAY | GH-PB34896VX | 100 | DOG TROTT | 2 |

Grand total: 6

MOUNTING LOCATION AS SELECTED BY OWNER IN FIELD.
PROVIDE BLOCKING IN WALL

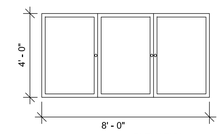


ELEVATION

DESCRIPTION
3 DOOR ENCLOSED BULLETIN BOARD, OUT DOOR USAGE, DARK BRONZE ALUMINUM FRAME. HINGED, SHATTER RESISTANT ACRYLIC DOOR WITH LOCK. WEATHER RESISTANT BACKING, INTERIOR TACKABLE VINYL (CARAMEL), INTERIOR CASE DEPTH 1-15/16

DIMENSIONS (APPROX.)
48"H, 96"W , 2.25"D

FINISH
DARK BRONZE

## UCF-1 UNDER COUNTER REFRIG.

| Manufacturer | Model | Room: Number | Room: Name | QTY |
|---|---|---|---|---|
| SUMMIT | SCR600BGLHVADA | 104 | COORIDOR | 1 |

Grand total: 1

DESCRIPTION
ADA COMPLIANT UNDERCOUNTER REFRIGERATOR

DIMENSIONS (APPROX.)
32.38" H , 23.63" W , 23.5" D

FINISH
BRUSHED ALUMINUM DOOR WITH DOUBLE PANE TEMPERED GLASS, WITH BLACK CABINET.

## REF - REFRIGERATOR

| Manufacturer | Model | Room: Number | Room: Name | QTY |
|---|---|---|---|---|
| SAMSUNG | RS25 | 111 | CONFERENCE ROOM | 1 |

Grand total: 1

DESCRIPTION
REFRIGERATOR

DIMENSIONS (APPROX.)
70"H, 35.75"W , 36"D

FINISH

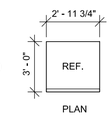


PLAN

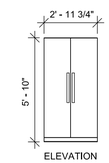


ELEVATION

## M-1 MICROWAVE

| Manufacturer | Model | Room: Number | Room: Name | QTY |
|---|---|---|---|---|
| SUMMIT | OTR24 | 111 | CONFERENCE ROOM | 1 |

Grand total: 1

DESCRIPTION
BUILT IN MICOROWAVE

DIMENSIONS (APPROX.)
15.13" H, 23.38" W, 13.75" D

MICRO DIMS (APPROX.)
12.125" H, 19" W, 13.75" D

FINISH
BRUSHED ALUMINUM

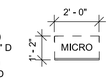


PLAN

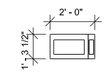


ELEVATION

## TV-1 TELEVISION

| Manufacturer | Model | Room: Number | Room: Name | QTY |
|---|---|---|---|---|
| LG | 86UM8070AUB 22 | 111 | CONFERENCE | 1 |

Grand total: 1

PLAN

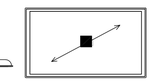

ELEVATION

DESCRIPTION
86" WALL MOUNTED TELEVISION, 4K SMART TV W/ WIDE VIEWING ANGLE

DIMENSIONS (APPROX.)
86" DIAG.

FINISH
STANDARD

## TV-2 SOUND BAR

| Manufacturer | Model | Room: Number | Room: Name | QTY |
|---|---|---|---|---|
| LG | SL7Y | 111 | CONFERENCE | 1 |

Grand total: 1

DESCRIPTION
3.1 CHANNEL 420W SOUND BAR

DIMENSIONS (APPROX.)
2.2" x 41.7" X 3.4" (H ", W ", D ")

FINISH
STANDARD

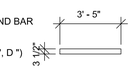


PLAN

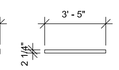


ELEVATION

## B-1 BENCH

| Manufacturer: | Model: | Room: Number | Room: Name | QTY |
|---|---|---|---|---|
| LANDSCAPE FORMS | STRATA | 100 | DOG TROTT | 2 |

Grand total: 2

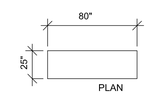


PLAN

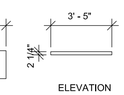


ELEVATION

DESCRIPTION
3.1 CHANNEL 420W SOUND BAR

DIMENSIONS (APPROX.)
2.2" x 41.7" X 3.4" (H ", W ", D ")

FINISH
STANDARD

## WINDOW SHADES

| Manufacturer: | Model: | | | |
|---|---|---|---|---|
| MECHO SHADES | SEE SPECS | | | |
| MARK | DIMENSION | DESCRIPTION | | QTY |
| WS1 | 36 x 76.5 | WINDOW SHADE | | 7 |
| WS2 | 66 x 72 | WINDOW SHADE | | 1 |
| WS3 | 122 x 60 | WINDOW SHADE | | 2 |
| WS4 | 96 x 132 | WINDOW SHADE | | 2 |
| WS5 | 93 x 132 | WINDOW SHADE | | 2 |
| WS6 | 72 x 132 | WINDOW SHADE | | 2 |

Grand total: 16


FORD POWELL &CARSON
Architects & Planners, Inc.
Architecture
Planning
Preservation
Interior Design
711 Navarro, Suite 400
San Antonio, Texas 78205
210/226-1246
92706


TEXAS PARKS & WILDLIFE

REGISTERED ARCHITECT RACHEL L. H. WRIGHT 20948 STATE OF TEXAS

SOUTH LLANO RIVER STATE PARK
HEADQUARTERS BUILDING RENOVATION AND EXPANSION
PROJECT NUMBER: 134245

DATE: 04.09.2021
DESIGNED BY: NP
DRAWN BY: JK,RF
REVIEWED BY: GC/AC
REVISED:
REVISED:
REVISED:

CONSTRUCTION DOCUMENTS

SHEET TITLE
FURNITURE SCHEDULE

SHEET NUMBER
A503

PATH: \\FREENAS\Projects\92706_S_llano_SP\(17) Drawings\(B) CD's 100 Percent\(2) Headquarters\A502 - FFE.dwg

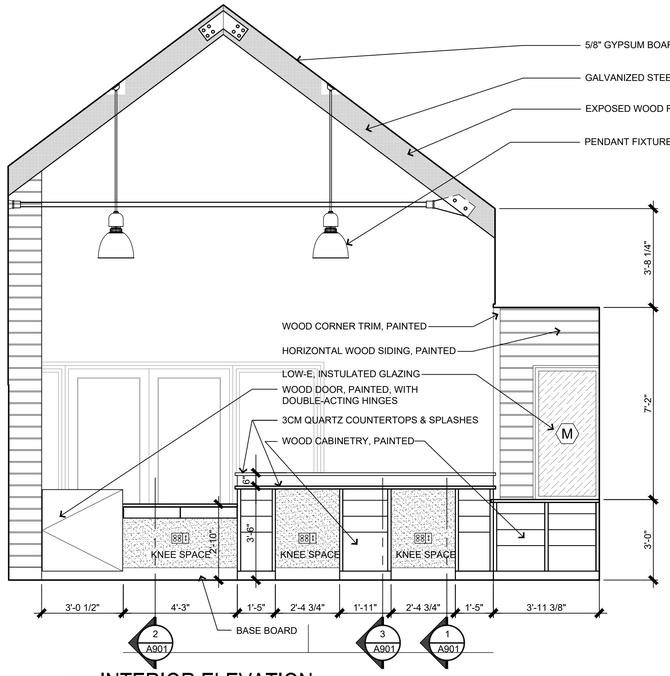


1 INTERIOR ELEVATION
SCALE: 3/8"=1'-0"

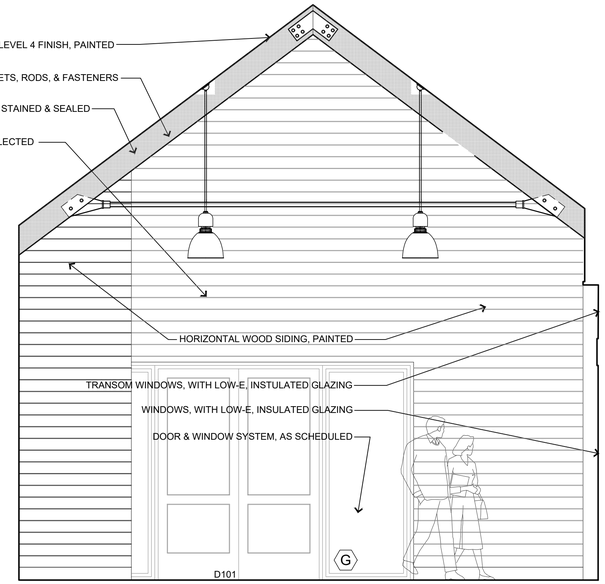


2 INTERIOR ELEVATION
SCALE: 3/8"=1'-0"

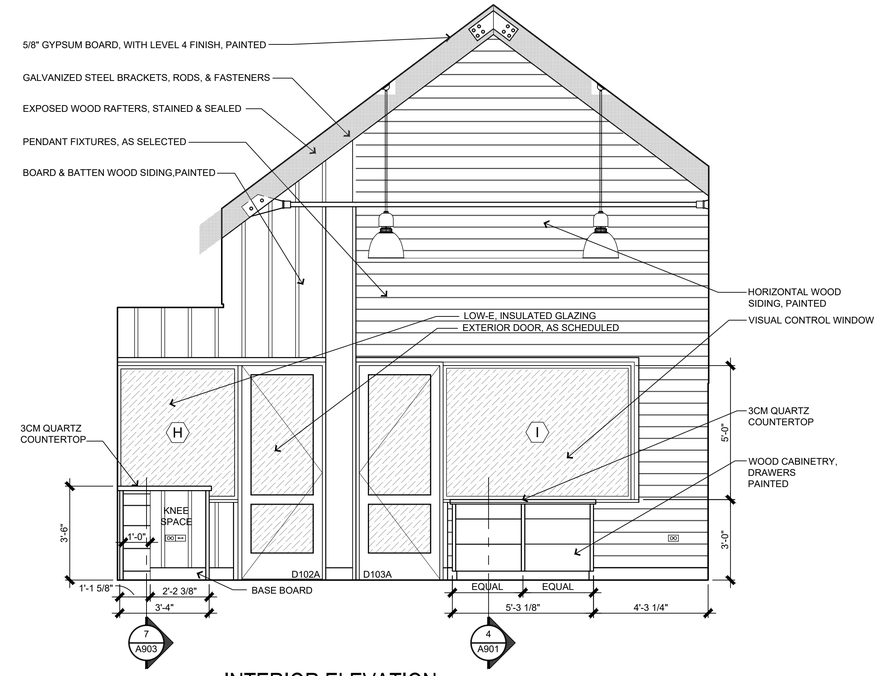


3 INTERIOR ELEVATION
SCALE: 3/8"=1'-0"

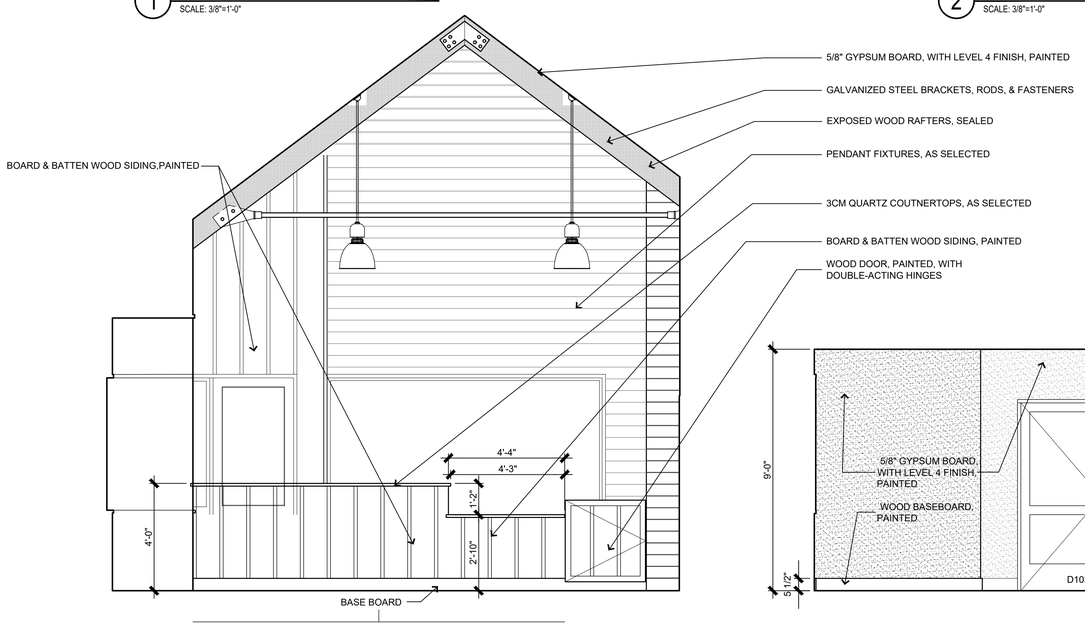


4 INTERIOR ELEVATION
SCALE: 3/8"=1'-0"

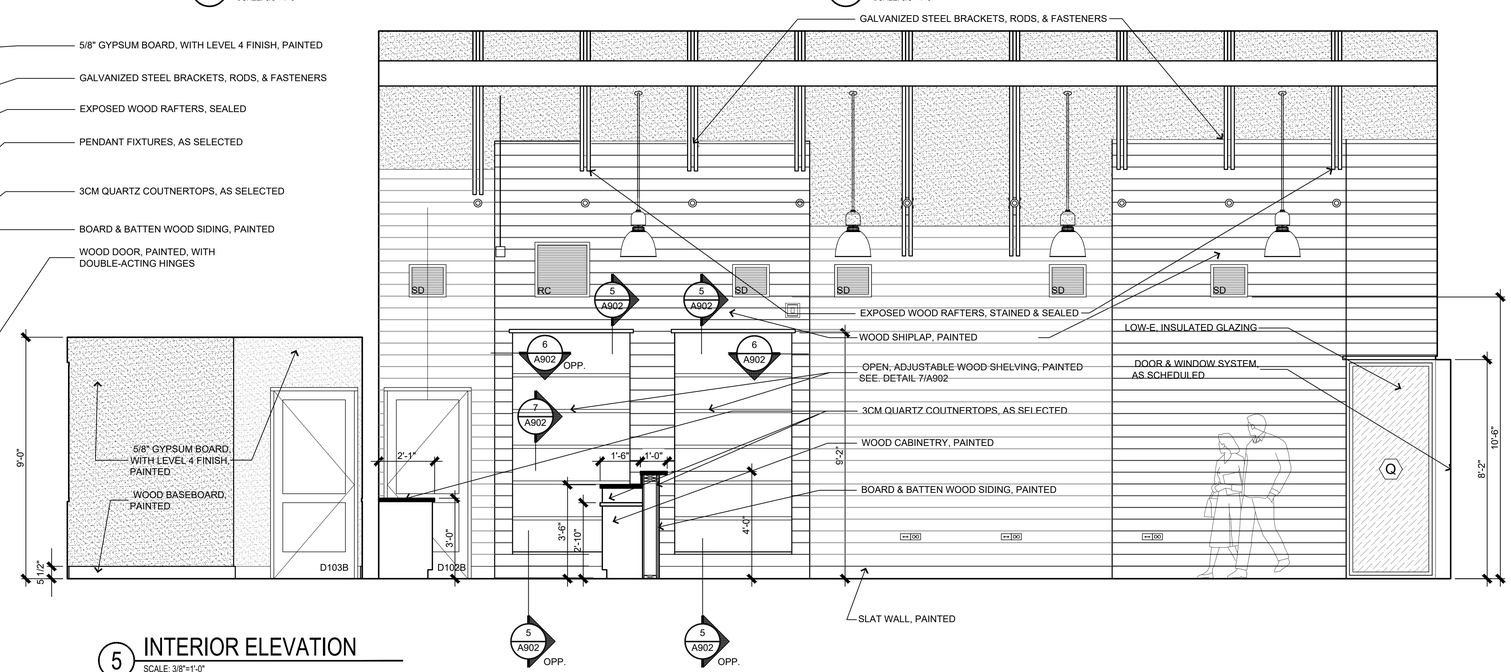


5 INTERIOR ELEVATION
SCALE: 3/8"=1'-0"

FORD POWELL &CARSON
Architects & Planners, Inc.

Architecture
Planning
Preservation
Interior Design

711 Navarro, Suite 400
San Antonio, Texas 78205
210/226-1246
92706

TEXAS PARKS & WILDLIFE

REGISTERED ARCHITECT
RACHEL H. WRIGHT
20948
STATE OF TEXAS

# SOUTH LLANO RIVER STATE PARK
## HEADQUARTERS BUILDING RENOVATION AND EXPANSION
PROJECT NUMBER: 134245

DATE: 04.09.2021
DESIGNED BY: NP
DRAWN BY: JK,RF
REVIEWED BY: GC/AC
REVISED:
REVISED:
REVISED:

CONSTRUCTION DOCUMENTS

SHEET TITLE
INTERIOR ELEVATIONS

SHEET NUMBER
A601

PATH: P:\92706_S_llano_SP\(17) Drawings\(8) CD's 100 Percent\(2) Headquarters\A601.dwg

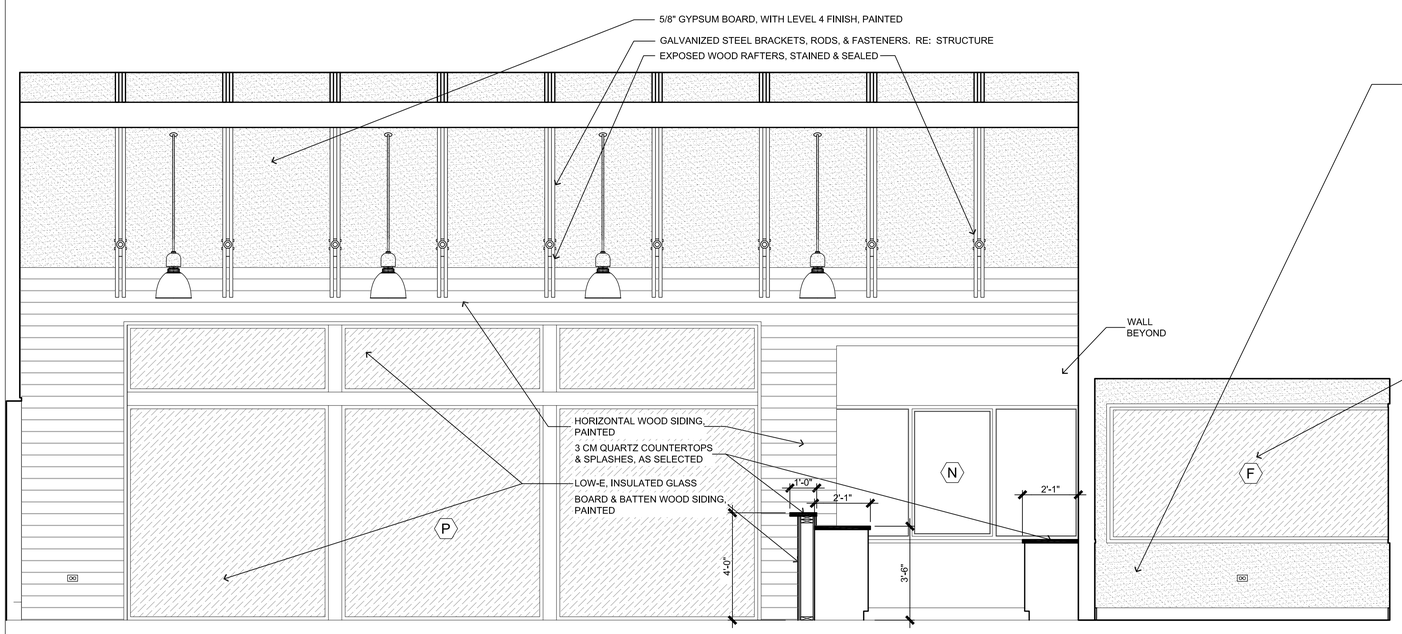


1 INTERIOR ELEVATION
SCALE: 3/8"=1'-0"

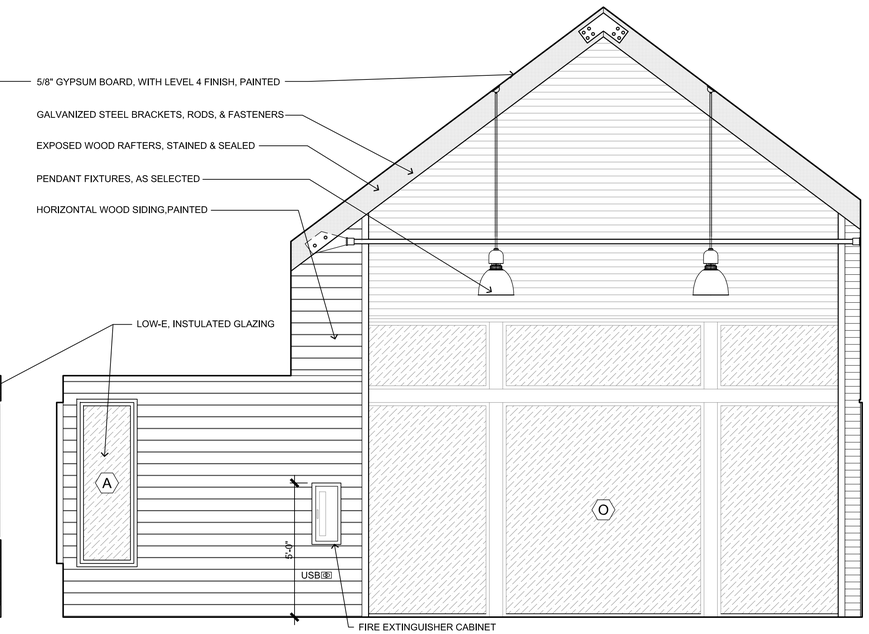


2 INTERIOR ELEVATION
SCALE: 3/8"=1'-0"

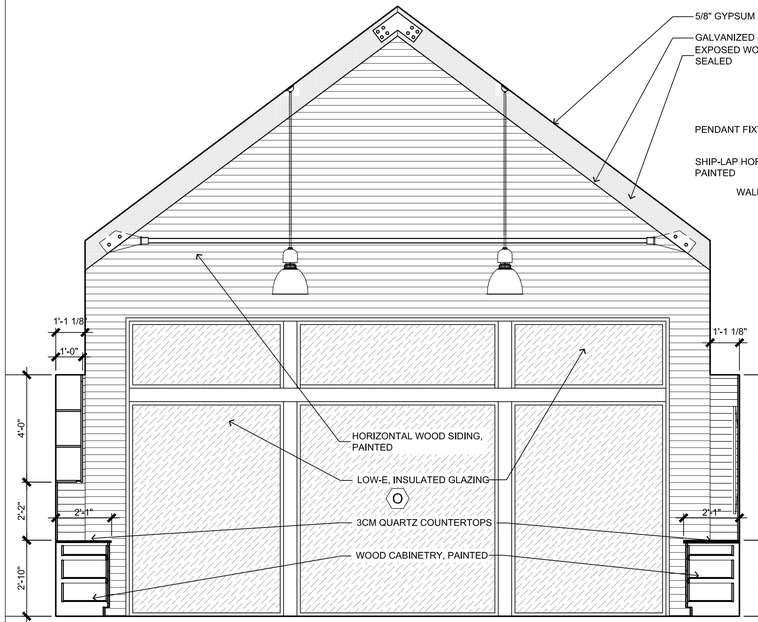


3 INTERIOR ELEVATION
SCALE: 3/8"=1'-0"

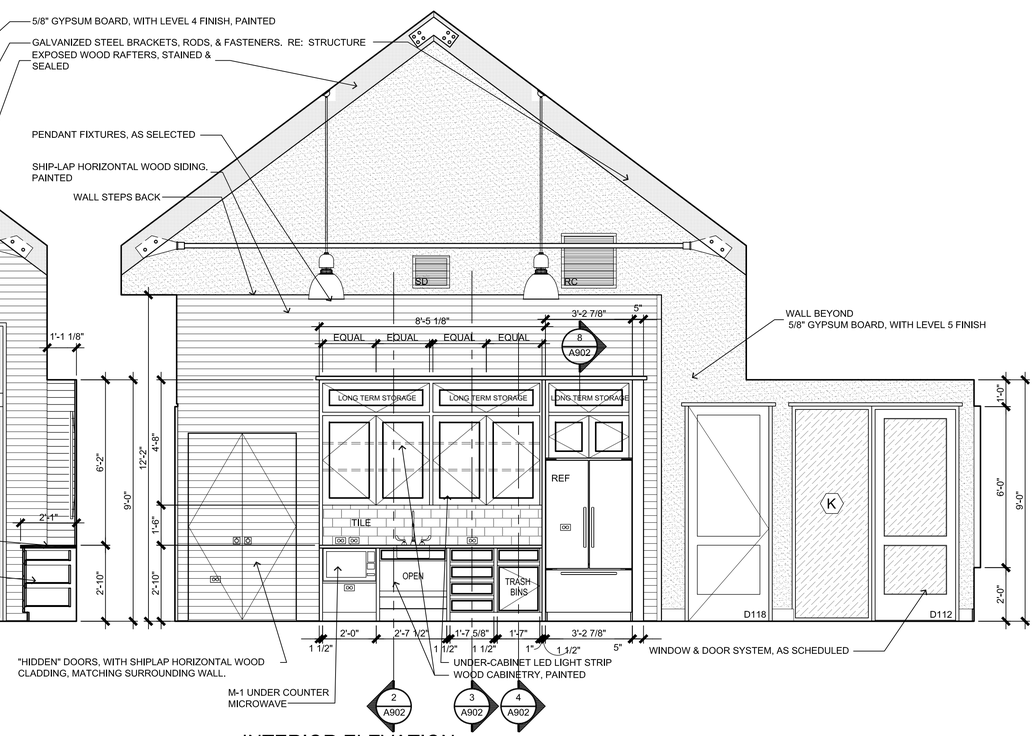


4 INTERIOR ELEVATION
SCALE: 3/8"=1'-0"

## ADA COMPLIANCE GENERAL NOTE

AN EMPLOYEE BREAK ROOM WITHOUT FIXED OR BUILT-IN RANGE COOKING FACILITIES IS NOT CONSIDERED A KITCHEN OR KITCHENETTE; THEREFORE, THEY ARE NOT SUBJECT TO COMPLIANCE WITH THE REQUIREMENTS OF 212 AND 804. THE BREAK ROOM, HOWEVER, SHALL COMPLY WITH APPLICABLE PROVISIONS OF TAS BASED ON THE ELEMENTS PROVIDED


FORD POWELL &CARSON
Architects & Planners, Inc.
Architecture
Planning
Preservation
Interior Design
711 Navarro, Suite 400
San Antonio, Texas 78205
210/226-1246
92706


TEXAS PARKS & WILDLIFE

REGISTERED ARCHITECT
RACHEL L. H. WRIGHT
20948
STATE OF TEXAS
2021

# SOUTH LLANO RIVER STATE PARK
## HEADQUARTERS BUILDING RENOVATION AND EXPANSION
PROJECT NUMBER: 134245

DATE: 04.09.2021
DESIGNED BY: NP
DRAWN BY: JK,RF
REVIEWED BY: GC/AC
REVISED:
REVISED:
REVISED:

CONSTRUCTION DOCUMENTS

SHEET TITLE
INTERIOR ELEVATIONS

SHEET NUMBER
A602

PATH: \\FREENAS\Projects\92706_S_llano_SP\(17) Drawings\(8) CD's 100 Percent\(2) Headquarters\A601.dwg

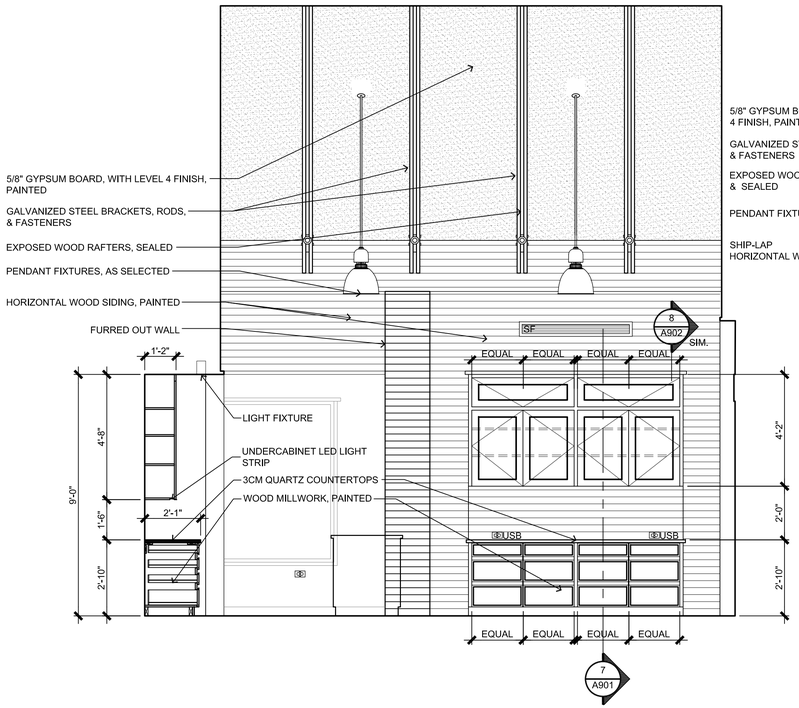


1 INTERIOR ELEVATION
SCALE: 3/8"=1'-0"

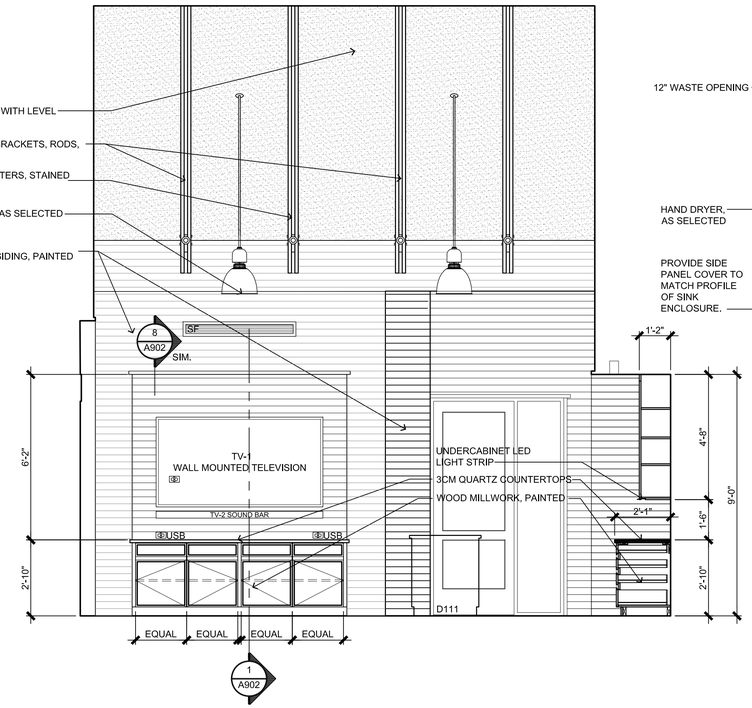


2 INTERIOR ELEVATION
SCALE: 3/8"=1'-0"

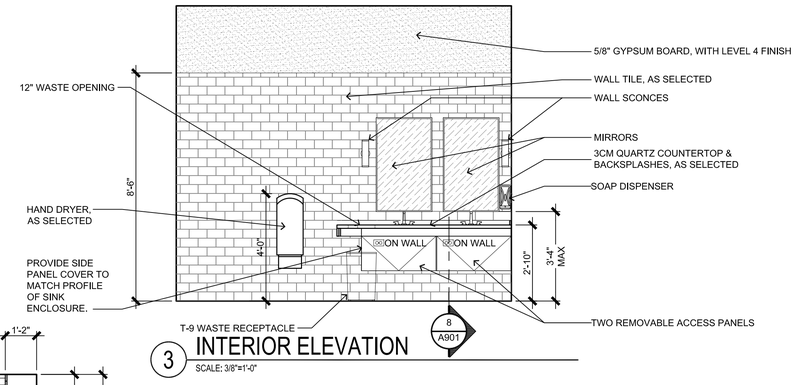


3 INTERIOR ELEVATION
SCALE: 3/8"=1'-0"

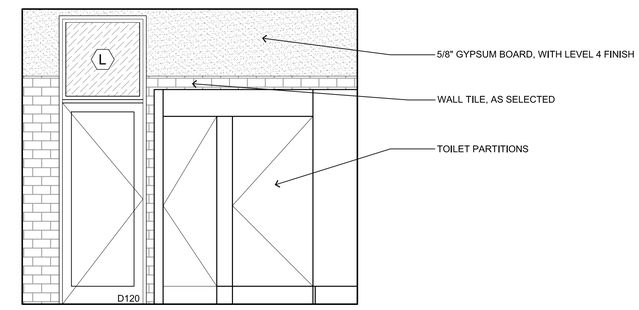


4 INTERIOR ELEVATION
SCALE: 3/8"=1'-0"

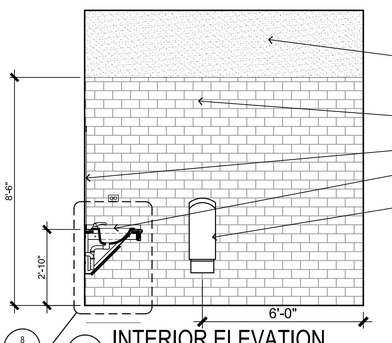


5 INTERIOR ELEVATION
SCALE: 3/8"=1'-0"

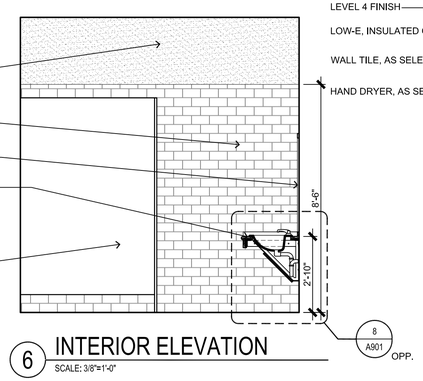


6 INTERIOR ELEVATION
SCALE: 3/8"=1'-0"

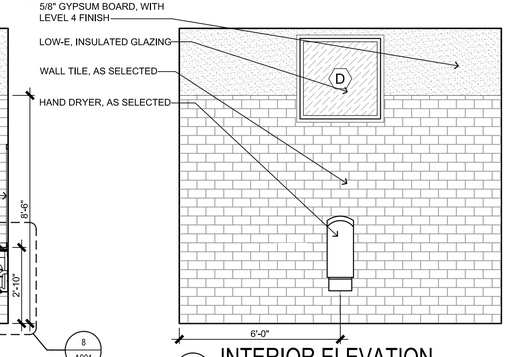


7 INTERIOR ELEVATION
SCALE: 3/8"=1'-0"

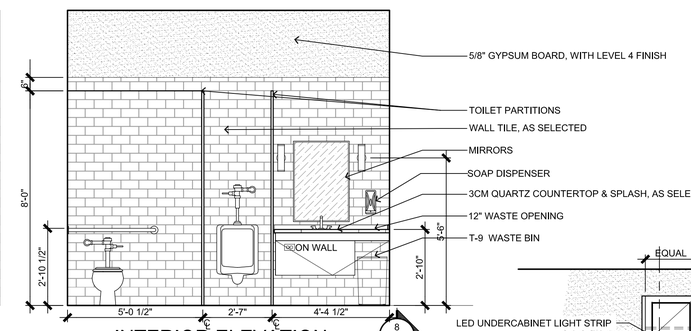


8 INTERIOR ELEVATION
SCALE: 3/8"=1'-0"

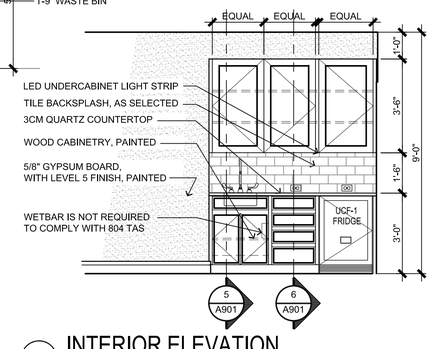


13 INTERIOR ELEVATION
SCALE: 3/8"=1'-0"

INSTA-HOT UNDER CABINET. SEE MEP.

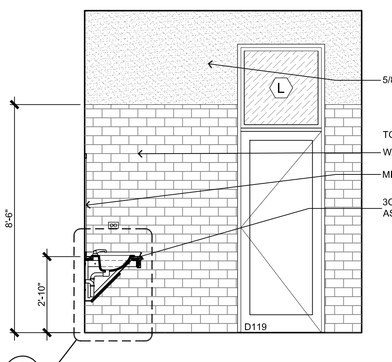


9 INTERIOR ELEVATION
SCALE: 3/8"=1'-0"

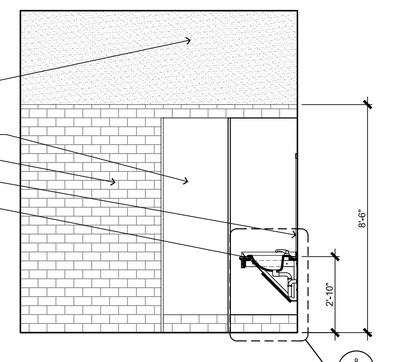


10 INTERIOR ELEVATION
SCALE: 3/8"=1'-0"

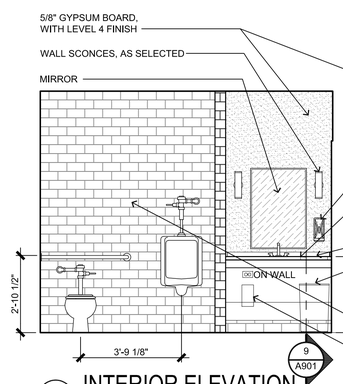


11 INTERIOR ELEVATION
SCALE: 3/8"=1'-0"

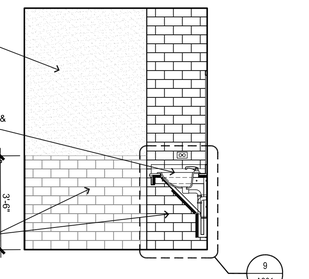


12 INTERIOR ELEVATION
SCALE: 3/8"=1'-0"

FORD POWELL &CARSON
Architects & Planners, Inc.
Architecture
Planning
Preservation
Interior Design
711 Navarro, Suite 400
San Antonio, Texas 78205
210/226-1246
92706

TEXAS PARKS & WILDLIFE

REGISTERED ARCHITECT RACHEL L. WRIGHT 20948 STATE OF TEXAS

# SOUTH LLANO RIVER STATE PARK
## HEADQUARTERS BUILDING RENOVATION AND EXPANSION
PROJECT NUMBER: 134245

DATE: 04.09.2021
DESIGNED BY: NP
DRAWN BY: JK,RF
REVIEWED BY: GC/AC
REVISED:
REVISED:
REVISED:

CONSTRUCTION DOCUMENTS

SHEET TITLE
INTERIOR ELEVATIONS

SHEET NUMBER
A603

PATH: \\FREENAS\Projects\92706_S_llano_SP\(17) Drawings\(B) CD's 100 Percent\(2) Headquarters\A601.dwg

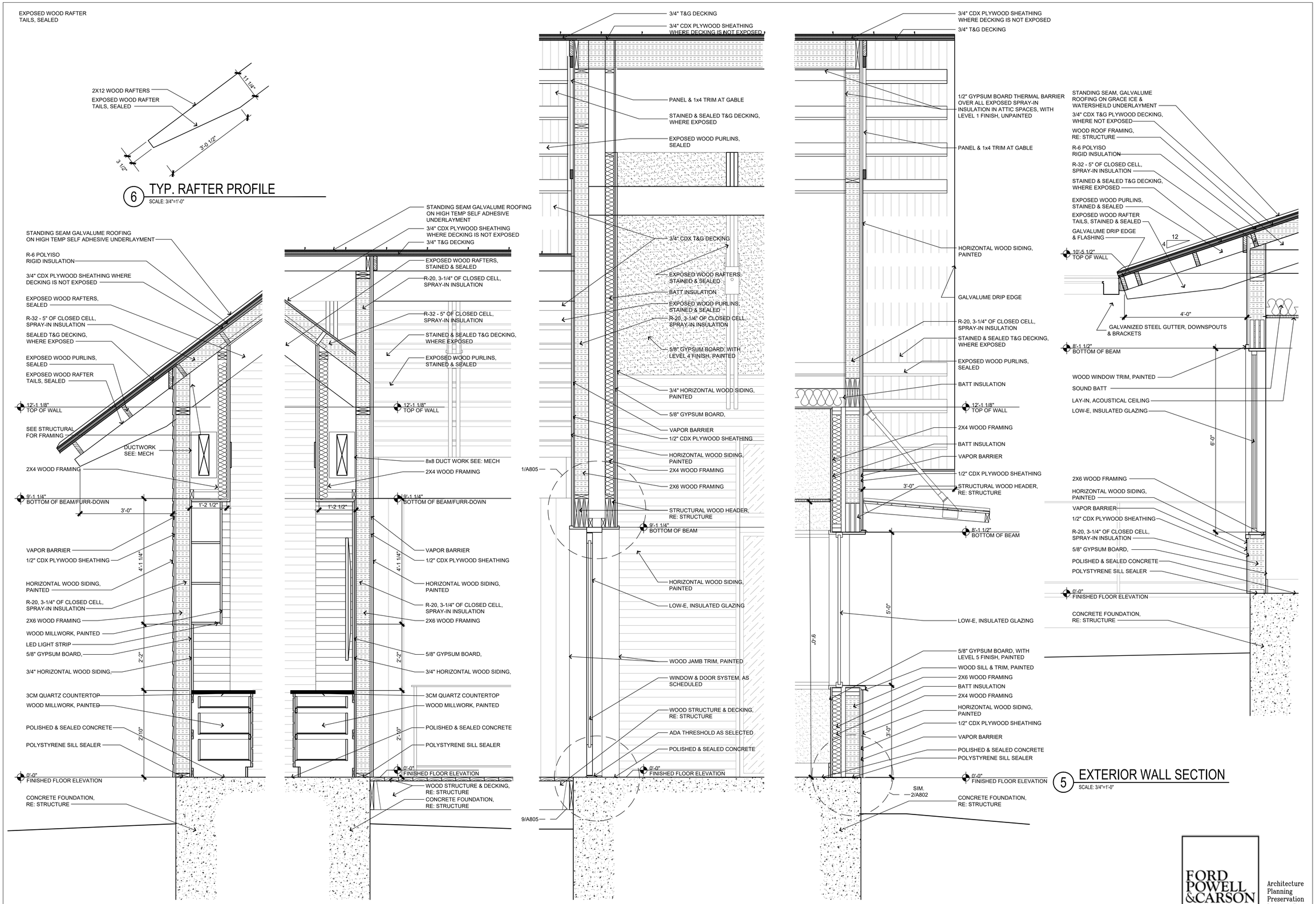


FORD POWELL &CARSON
Architects & Planners, Inc.
Architecture
Planning
Preservation
Interior Design
711 Navarro, Suite 400
San Antonio, Texas 78205
210/226-1246
92706

TEXAS PARKS & WILDLIFE

REGISTERED ARCHITECT RACHEL L. H. WRIGHT 20948 STATE OF TEXAS

# SOUTH LLANO RIVER STATE PARK
## HEADQUARTERS BUILDING RENOVATION AND EXPANSION
PROJECT NUMBER: 134245

DATE: 04.09.2021
DESIGNED BY: NP
DRAWN BY: JK,RF
REVIEWED BY: GC/AC
REVISED:
REVISED:
REVISED:

CONSTRUCTION DOCUMENTS

SHEET TITLE
EXTERIOR WALL SECTIONS

SHEET NUMBER
A701

PATH: P:\92706_S_llano_SP\(17) Drawings\(8) CD's 100 Percent\(2) Headquarters\A701.dwg

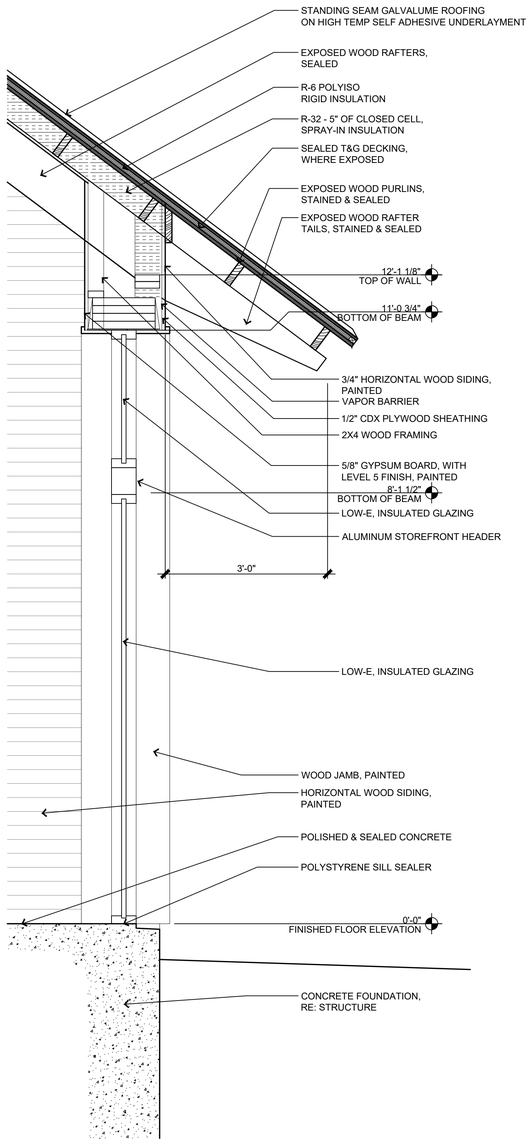


1 EXTERIOR WALL SECTION
SCALE: 3/4"=1'-0"

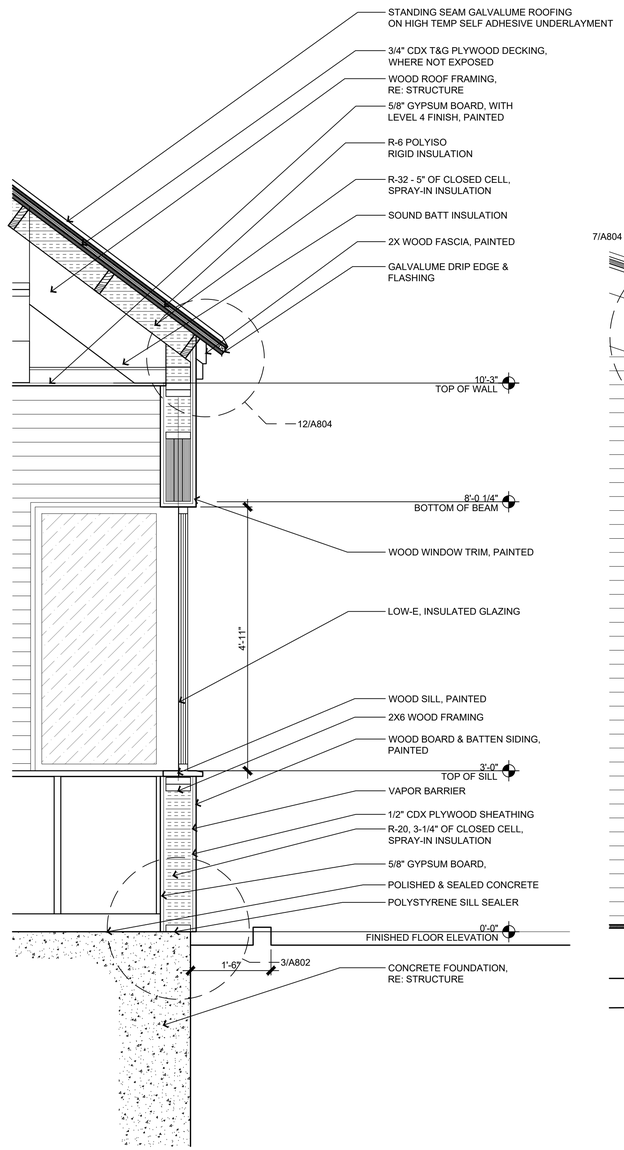


2 EXTERIOR WALL SECTION
SCALE: 3/4"=1'-0"

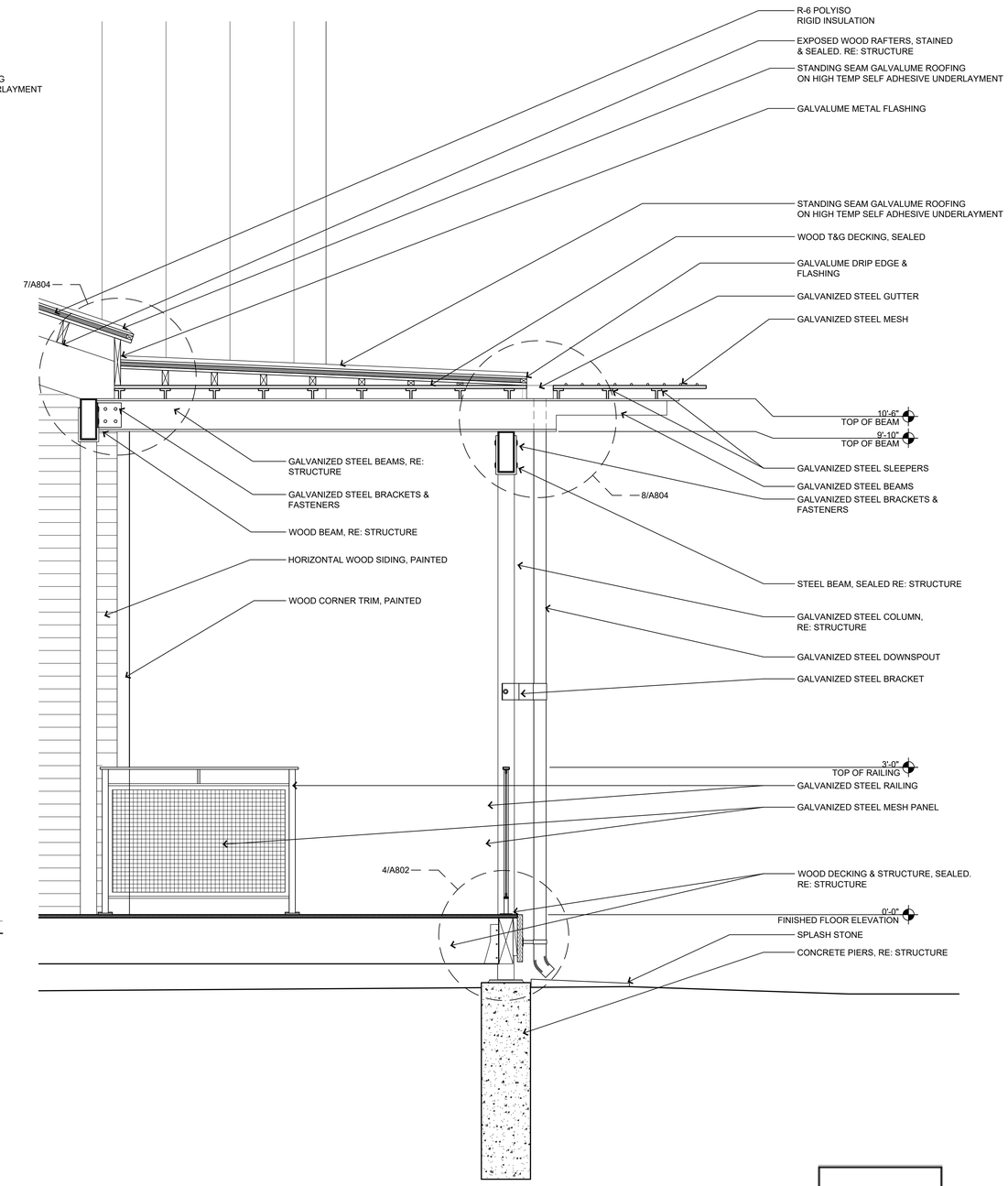


3 EXTERIOR WALL SECTION
SCALE: 3/4"=1'-0"

FORD POWELL &CARSON
Architects & Planners, Inc.
Architecture
Planning
Preservation
Interior Design
711 Navarro, Suite 400
San Antonio, Texas 78205
210/226-1246
92706

TEXAS PARKS & WILDLIFE

REGISTERED ARCHITECT
RACHEL L. H. WRIGHT
20948
STATE OF TEXAS

# SOUTH LLANO RIVER STATE PARK
## HEADQUARTERS BUILDING RENOVATION AND EXPANSION
PROJECT NUMBER: 134245

DATE: 04.09.2021
DESIGNED BY: NP
DRAWN BY: JK,RF
REVIEWED BY: GC/AC
REVISED:
REVISED:
REVISED:

CONSTRUCTION DOCUMENTS

SHEET TITLE
EXTERIOR WALL SECTIONS

SHEET NUMBER
A702

PATH: P:\92706_S_llano_SP\(17) Drawings\(8) CD's 100 Percent\(2) Headquarters\A701.dwg

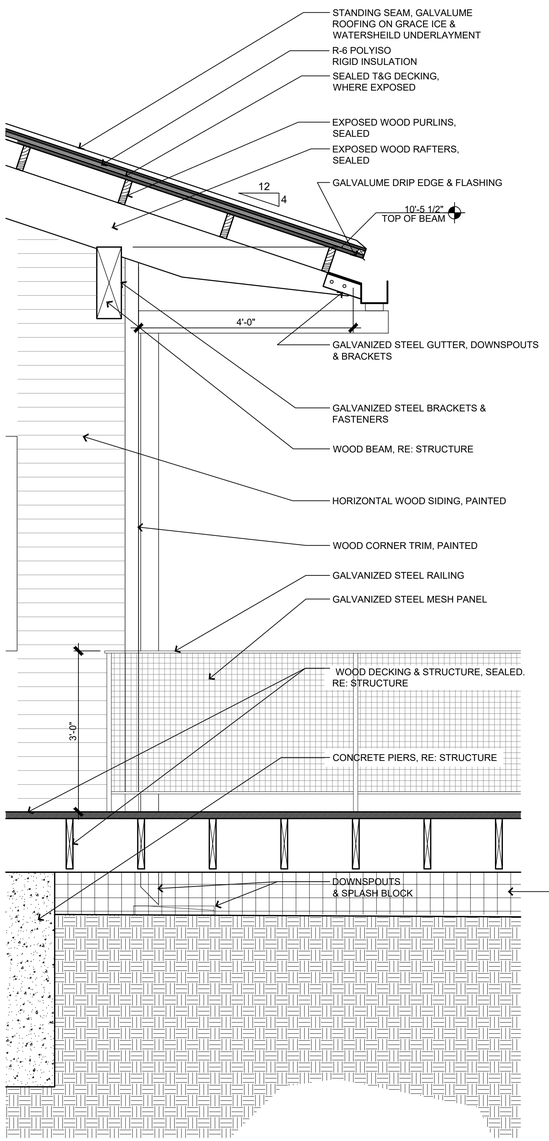


1 EXTERIOR WALL SECTION
SCALE: 3/4"=1'-0"

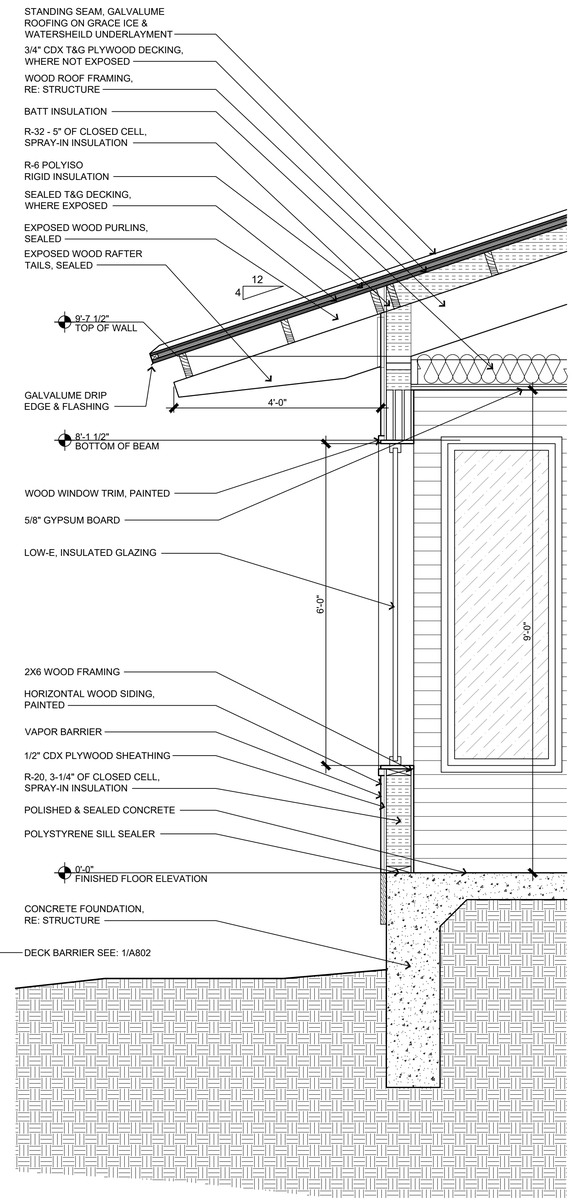


2 EXTERIOR WALL SECTION
SCALE: 3/4"=1'-0"

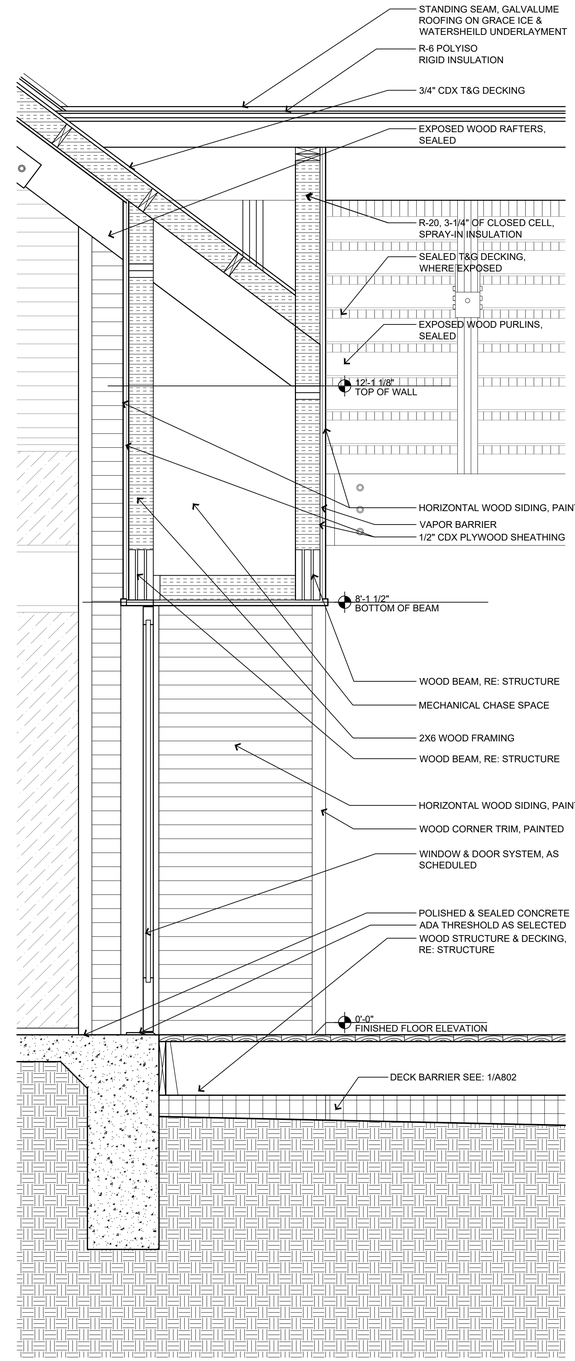


3 EXTERIOR WALL SECTION
SCALE: 3/4"=1'-0"

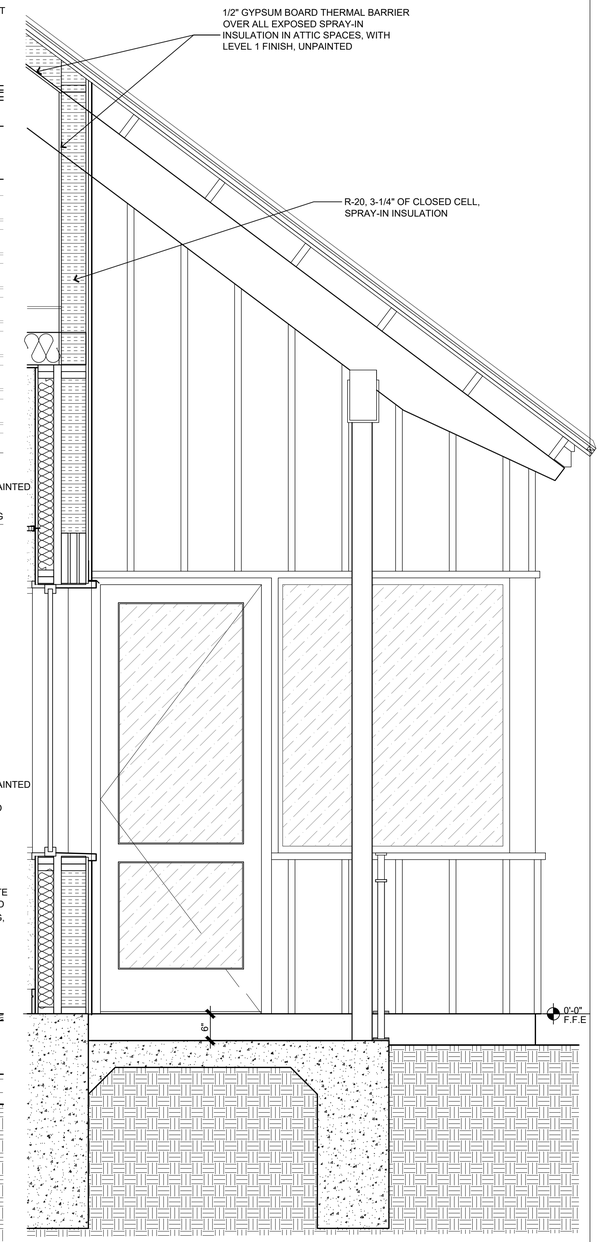


4 EXTERIOR WALL SECTION
SCALE: 3/4"=1'-0"

FORD POWELL &CARSON
Architects & Planners, Inc.

Architecture
Planning
Preservation
Interior Design

711 Navarro, Suite 400
San Antonio, Texas 78205
210/226-1246
92706

TEXAS PARKS & WILDLIFE

REGISTERED ARCHITECT
RACHEL L. H. WRIGHT
20948
STATE OF TEXAS

SOUTH LLANO RIVER STATE PARK
HEADQUARTERS BUILDING RENOVATION AND EXPANSION
PROJECT NUMBER: 134245

DATE: 04.09.2021
DESIGNED BY: NP
DRAWN BY: JK,RF
REVIEWED BY: GC/AC
REVISED:
REVISED:
REVISED:

CONSTRUCTION DOCUMENTS

SHEET TITLE
EXTERIOR WALL SECTIONS

SHEET NUMBER
A703

PATH: P:\92706_S_llano_SP\(17) Drawings\(8) CD's 100 Percent\(2) Headquarters\A701.dwg

NOTE:

1. CONTINUE GYP. BD. FINISH A MIN. 6" ABOVE
2. LAY-IN CEILING. GYP. BD. FINISHED CEILINGS.

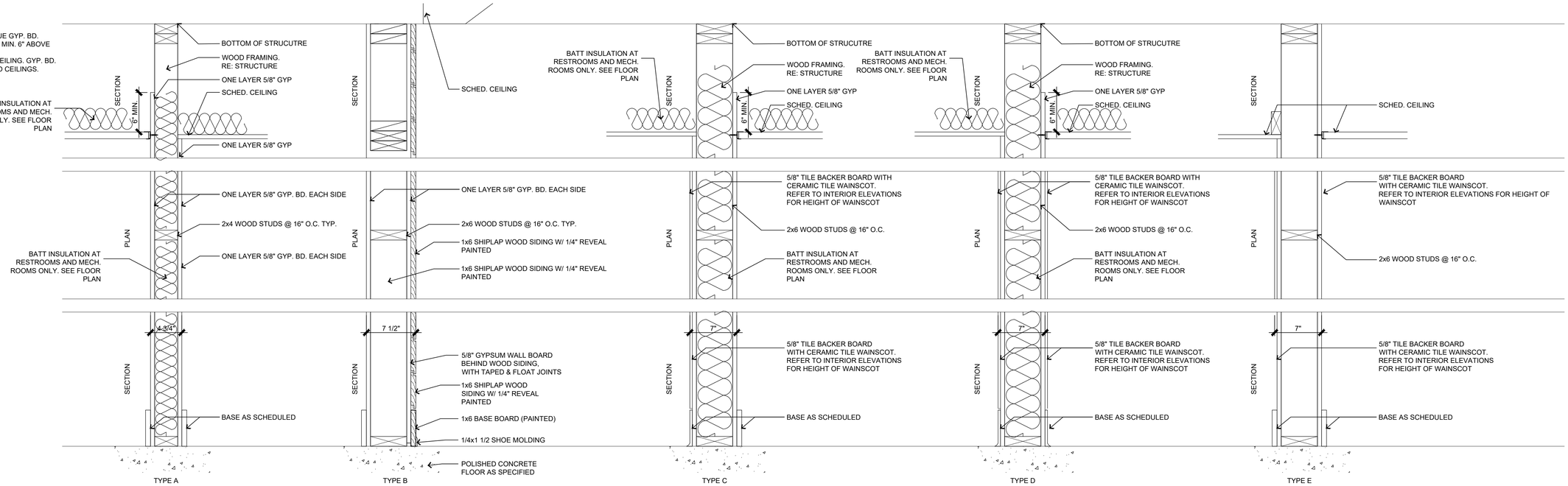


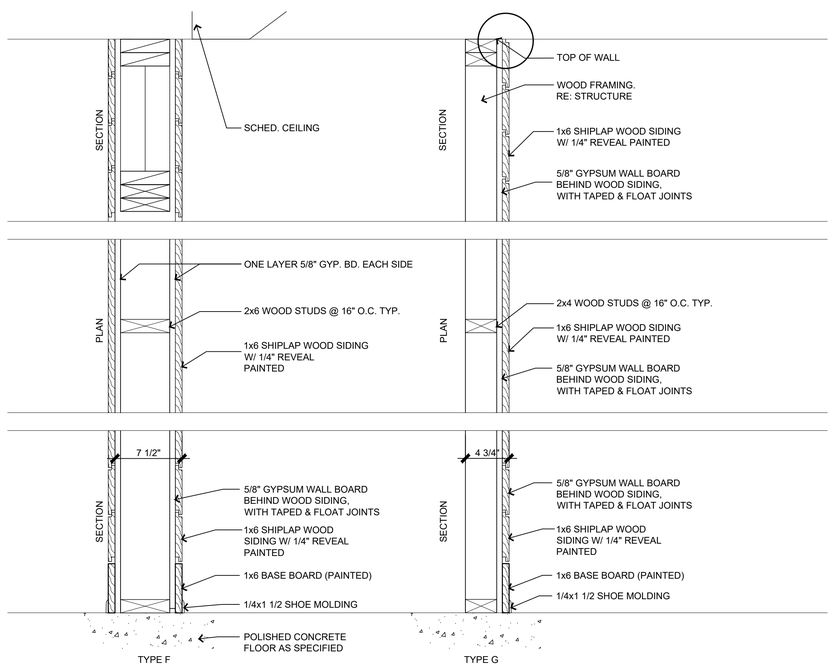


## 1 PARTITION TYPES

SCALE: 1 - 1/2"=1'-0"

TEXAS PARKS & WILDLIFE

REGISTERED ARCHITECT RACHEL L. H. WRIGHT 20948 STATE OF TEXAS

# SOUTH LLANO RIVER STATE PARK
## HEADQUARTERS BUILDING RENOVATION AND EXPANSION
PROJECT NUMBER: 134245

DATE: 04.09.2021
DESIGNED BY: NP
DRAWN BY: JK,RF
REVIEWED BY: GC/AC
REVISED:
REVISED:
REVISED:

CONSTRUCTION DOCUMENTS

SHEET TITLE
INTERIOR WALL TYPES

SHEET NUMBER
A704


FORD POWELL &CARSON Architects & Planners, Inc.
Architecture
Planning
Preservation
Interior Design
711 Navarro, Suite 400
San Antonio, Texas 78205
210/226-1246
92706


PATH: P:\92706_S_llano_SP\(17) Drawings\(8) CD's 100 Percent\(2) Headquarters\A701.dwg

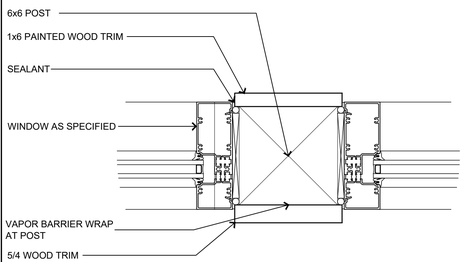


1 PLAN DETAIL
SCALE: 3"=1'-0"

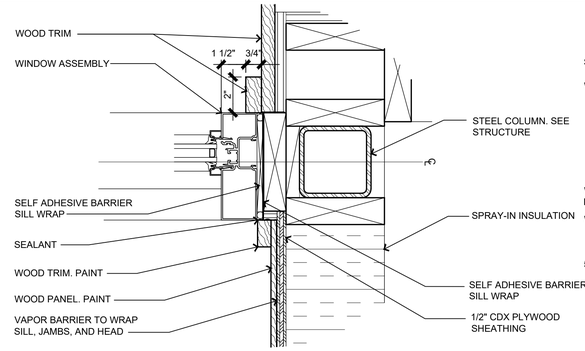


2 WINDOW JAMB DETAIL
SCALE: 3"=1'-0"

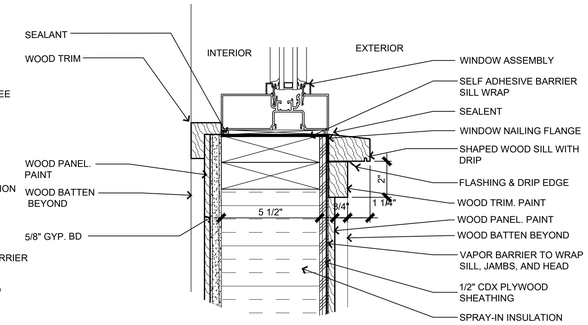


3 WINDOW SILL DETAIL
SCALE: 3"=1'-0"

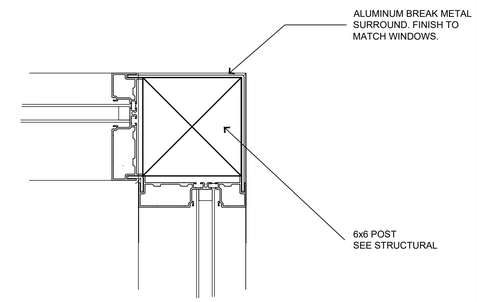


4 PLAN DETAIL
SCALE: 3"=1'-0"

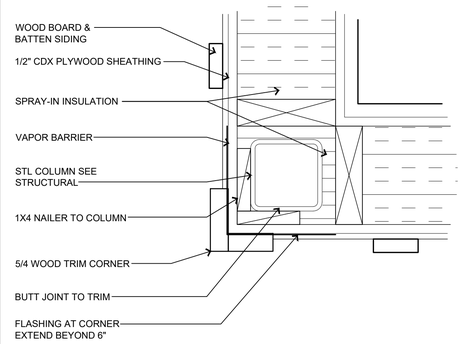


5 PLAN DETAIL @ COL 2A
SCALE: 3"=1'-0"

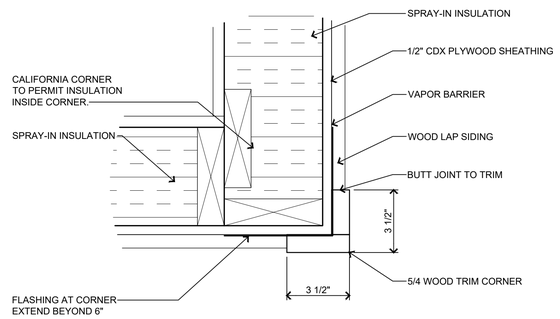


6 EXTERIOR CORNER PLAN DETAIL
SCALE: 3"=1'-0"

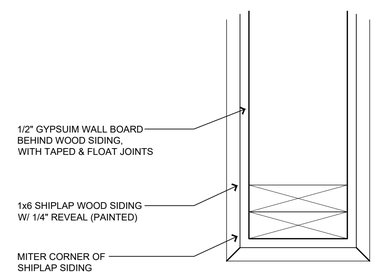


7 PLAN DETAIL
SCALE: 3"=1'-0"

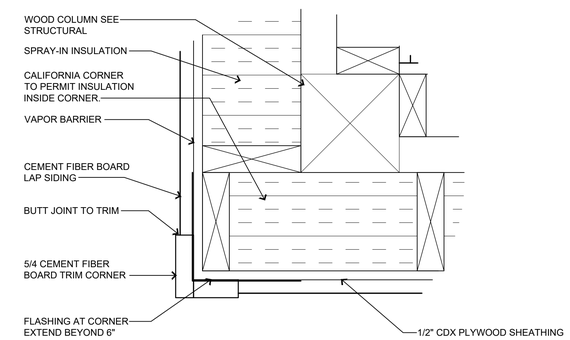


8 PLAN DETAIL @ COL. C1
SCALE: 3"=1'-0"

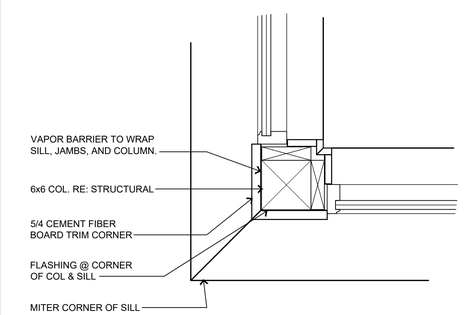


9 JAMB DETAIL @ COL. C1
SCALE: 1 1/2"=1'-0"

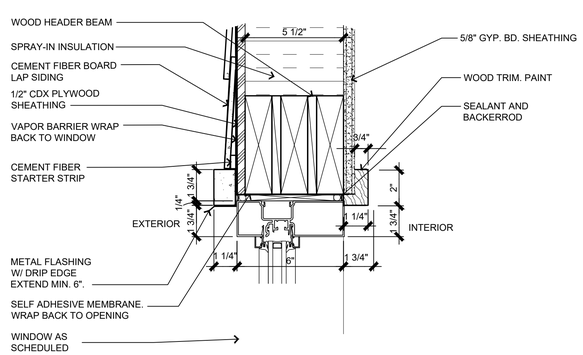


10 WINDOW HEAD DETAIL
SCALE: 3"=1'-0"

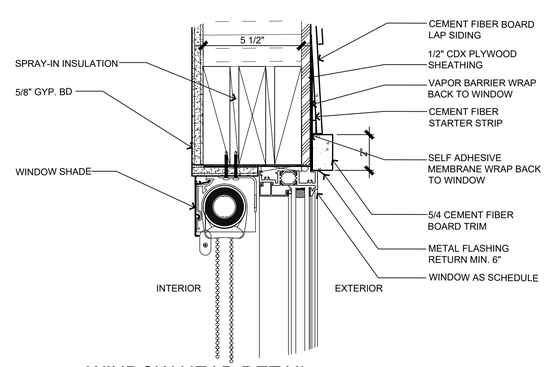


11 WINDOW HEAD DETAIL
SCALE: 3"=1'-0"

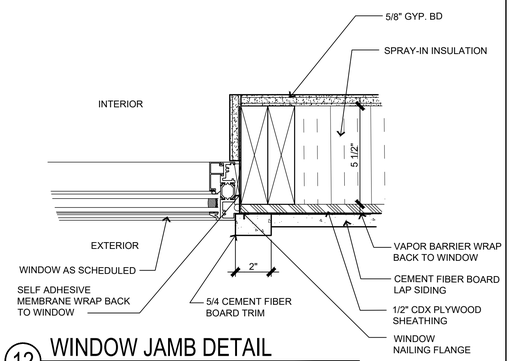


12 WINDOW JAMB DETAIL
SCALE: 3"=1'-0"

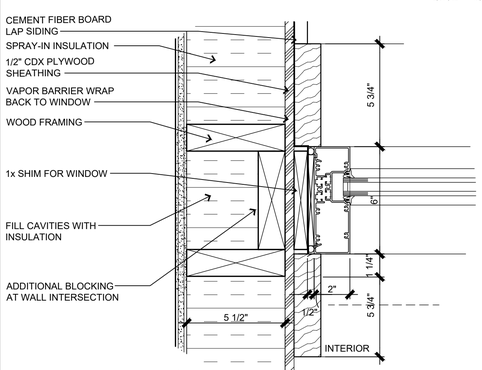


13 WINDOW JAMB DETAIL
SCALE: 3"=1'-0"

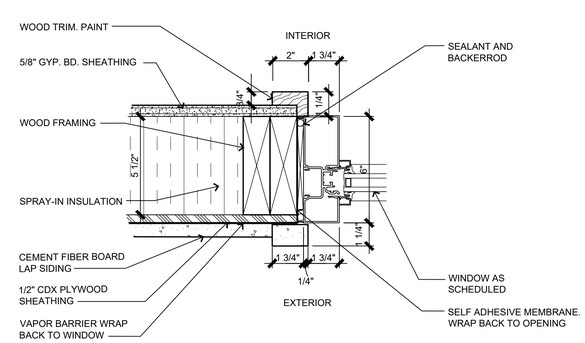


14 WINDOW JAMB DETAIL
SCALE: 3"=1'-0"

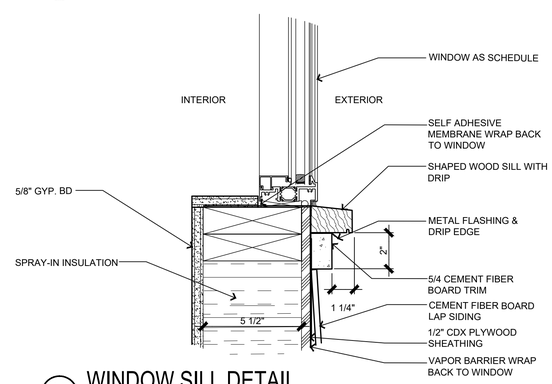


15 WINDOW SILL DETAIL
SCALE: 3"=1'-0"

FORD POWELL &CARSON
Architects & Planners, Inc.
Architecture
Planning
Preservation
Interior Design
711 Navarro, Suite 400
San Antonio, Texas 78205
210/226-1246
92706

TEXAS PARKS & WILDLIFE

REGISTERED ARCHITECT RACHEL H. WRIGHT 20948 STATE OF TEXAS

# SOUTH LLANO RIVER STATE PARK
## HEADQUARTERS BUILDING RENOVATION AND EXPANSION
PROJECT NUMBER: 134245

DATE: 04.09.2021
DESIGNED BY: NP
DRAWN BY: JK,RF
REVIEWED BY: GC/AC
REVISED:
REVISED:
REVISED:

CONSTRUCTION DOCUMENTS

SHEET TITLE
PLAN DETAILS

SHEET NUMBER
A801

PATH: P:\92706_S_llano_SP\(17) Drawings\(8) CD's 100 Percent\(2) Headquarters\A801.dwg

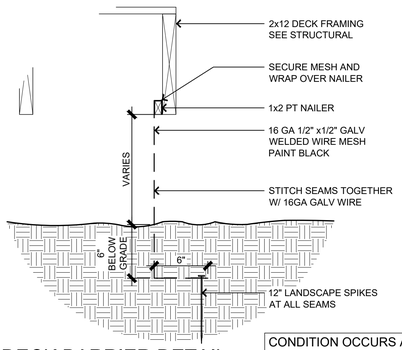


1 DECK BARRIER DETAIL
SCALE: 1 1/2"=1'-0"

CONDITION OCCURS AT ALL OPEN AREA'S BELOW DECKS & RAMPS

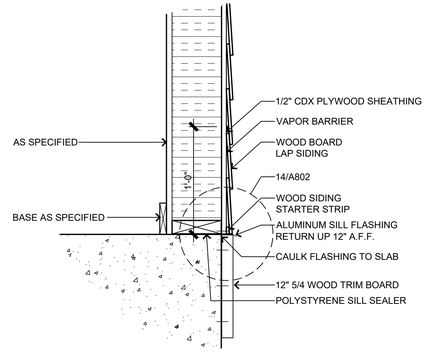


2 SILL @ LAP SIDING DETAIL
SCALE: 1 1/2"=1'-0"

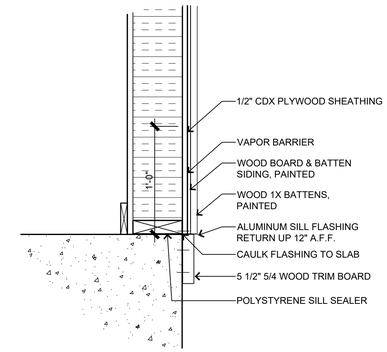


3 SILL @ BOARD & BATTEN DETAIL
SCALE: 1 1/2"=1'-0"

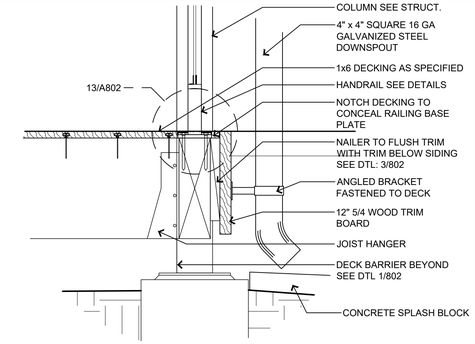


4 EDGE OF DECK DETAIL
SCALE: 1 1/2"=1'-0"

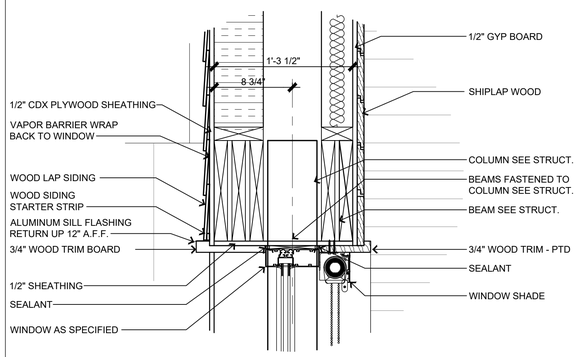


5 WINDOW HEAD DETAIL
SCALE: 1 1/2"=1'-0"

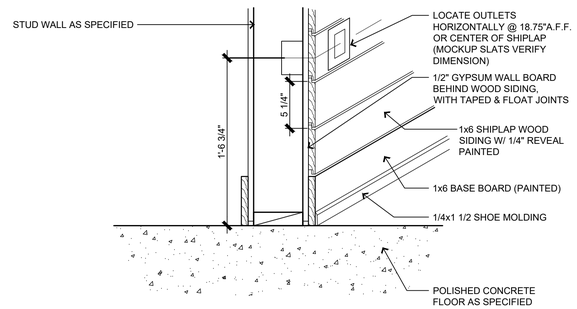


6 BASE @ SHIPLAP DETAIL
SCALE: 1 1/2"=1'-0"

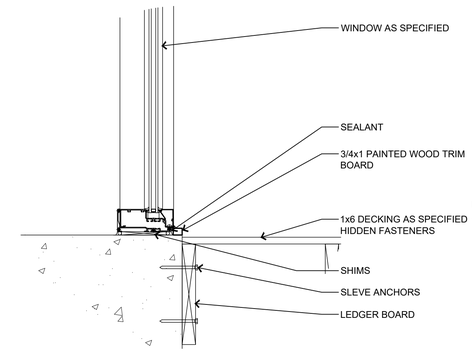


7 DECK AT STOREFRONT SILL DETAIL
SCALE: 1 1/2"=1'-0"

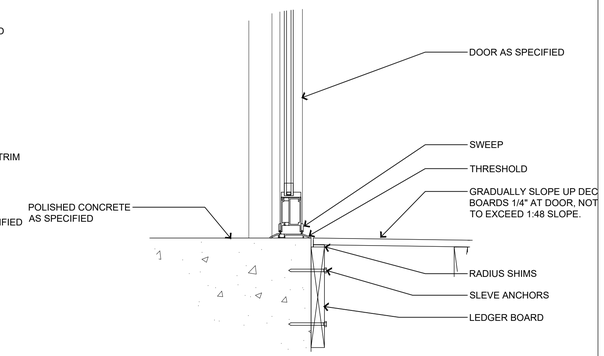


8 DECK AT ENTRANCE DETAIL
SCALE: 1 1/2"=1'-0"

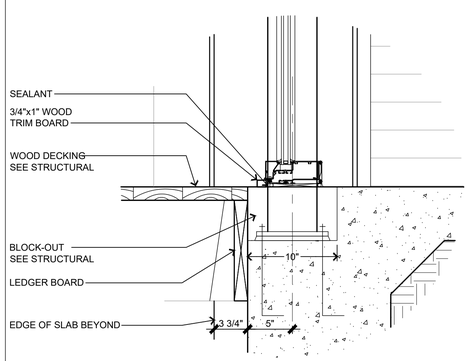


9 SECTION DETAIL
SCALE: 1 1/2"=1'-0"

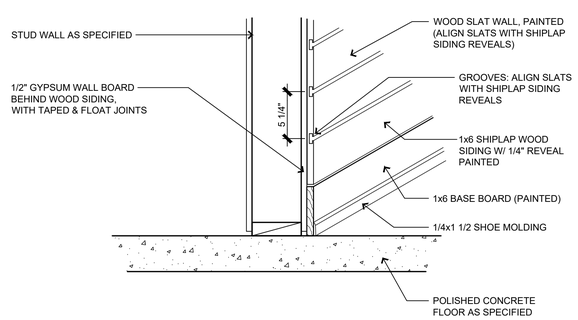


10 BASE @ SLATWALL DETAIL
SCALE: 1 1/2"=1'-0"

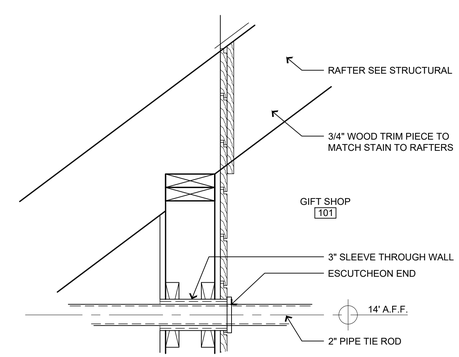


11 TIE ROD @ SHIPLAP DETAIL
SCALE: 1 1/2"=1'-0"

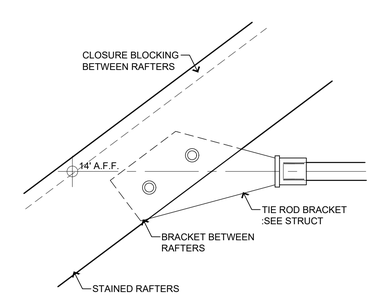


12 SECTION DETAIL
SCALE: 1 1/2"=1'-0"

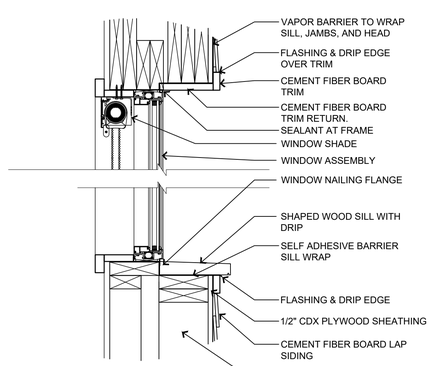


13 WINDOW SECTION DETAIL
SCALE: 1 1/2"=1'-0"

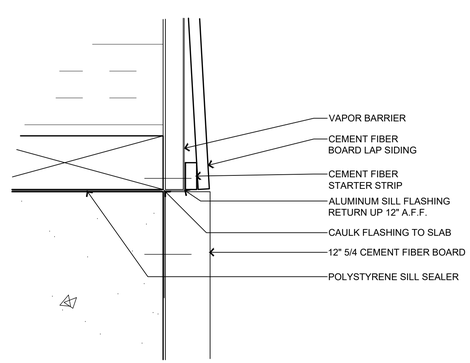


14 GUARDRAIL @ TOP RAIL
SCALE: 6"=1'-0"

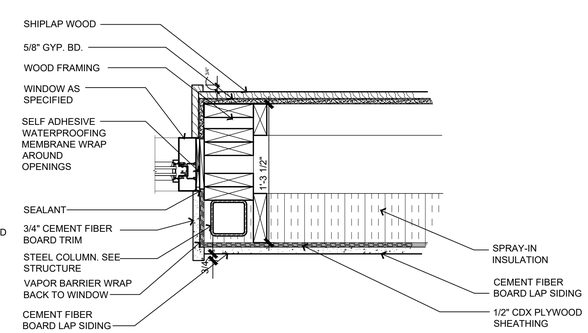


15 WINDOW JAMB DETAIL
SCALE: 1 1/2"=1'-0"

FORD POWELL &CARSON
Architects & Planners, Inc.
711 Navarro, Suite 400
San Antonio, Texas 78205
210/226-1246
92706

Architecture
Planning
Preservation
Interior Design

TEXAS PARKS & WILDLIFE

REGISTERED ARCHITECT RACHEL L. H. WRIGHT 20948 STATE OF TEXAS

# SOUTH LLANO RIVER STATE PARK
## HEADQUARTERS BUILDING RENOVATION AND EXPANSION
PROJECT NUMBER: 134245

DATE: 04.09.2021
DESIGNED BY: NP
DRAWN BY: JK,RF
REVIEWED BY: GC/AC
REVISED:
REVISED:
REVISED:

CONSTRUCTION DOCUMENTS

SHEET TITLE
SECTION DETAILS

SHEET NUMBER
A802

PATH: P:\92706_S_llano_SP\(17) Drawings\(8) CD's 100 Percent\(2) Headquarters\A801.dwg

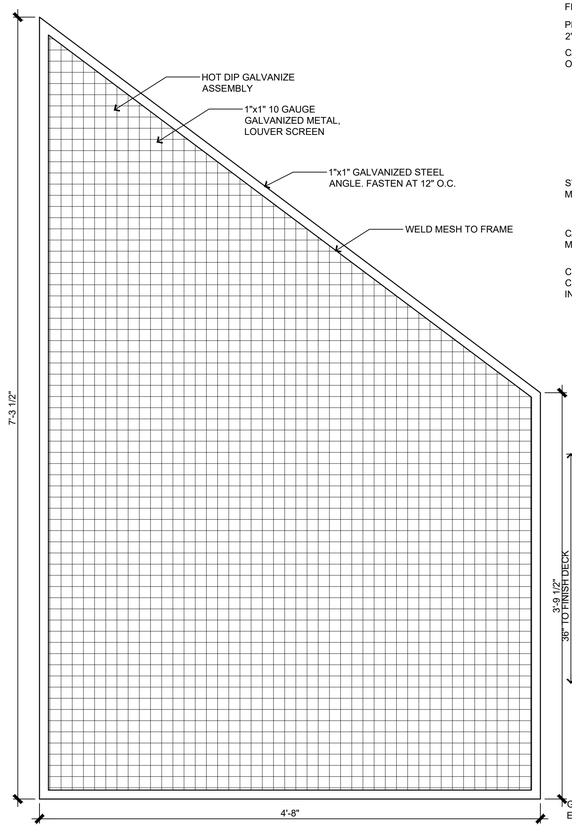


FIELD VERIFY ALL DIMENSIONS TO FIT OPENING.

## 1 METAL SCREEN DETAIL
SCALE: 1 1/2"=1'-0"

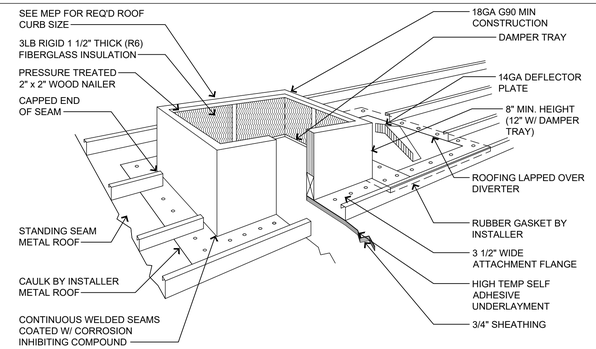


## 3 SECTION DETAIL
SCALE: 1 1/2"=1'-0"

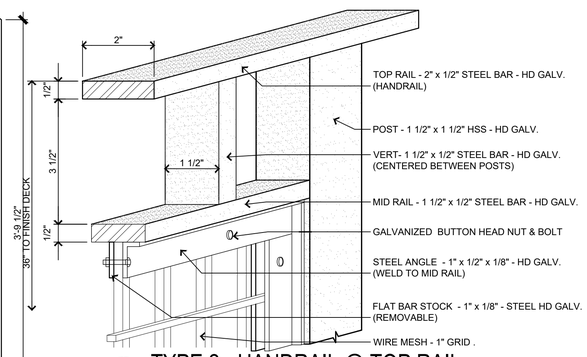


## 4 TYPE 2 - HANDRAIL @ TOP RAIL
SCALE: 6"=1'-0"

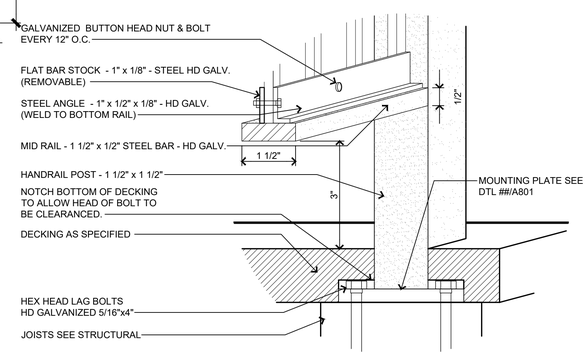


## 5 TYPE 2 - HANDRAIL @ BOTTOM RAIL & BASE
SCALE: 6"=1'-0"

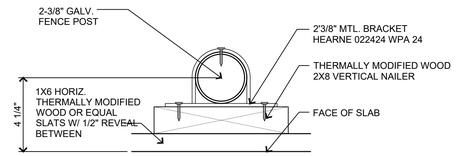


## 7 TYP. FENCE DETAIL
SCALE: 3"=1'-0"

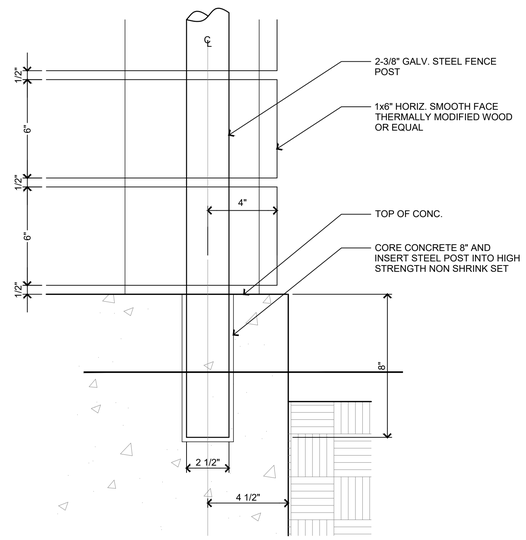


## 8 TYP. EMBEDDED GALV STEEL POST
SCALE: 3"=1'-0"

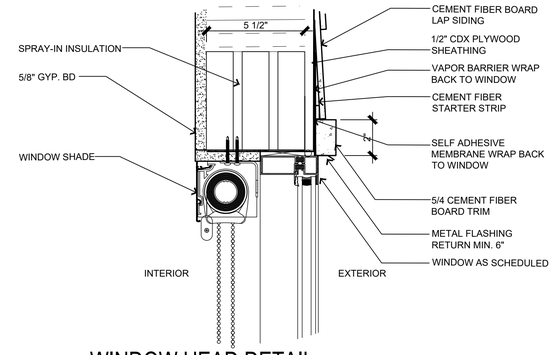


## 10 WINDOW HEAD DETAIL
SCALE: 3"=1'-0"

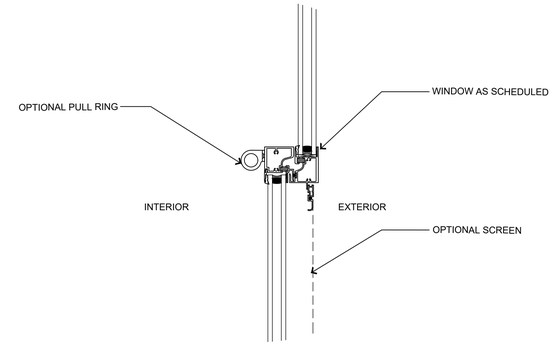


## 11 WINDOW MEETING RAIL DETAIL
SCALE: 3"=1'-0"

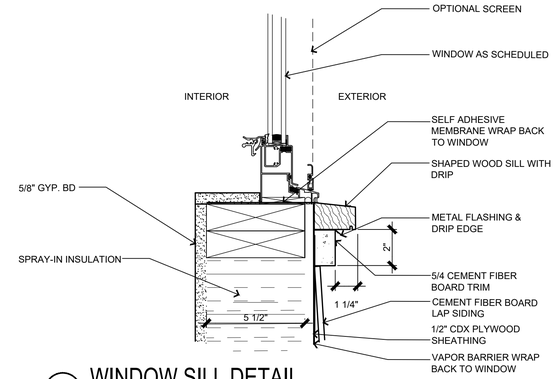


## 12 WINDOW SILL DETAIL
SCALE: 3"=1'-0"

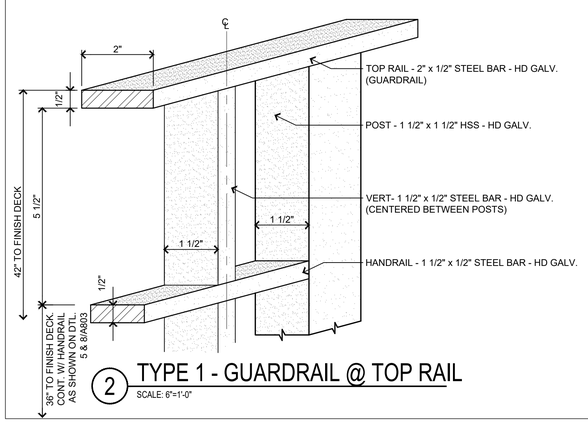


## 2 TYPE 1 - GUARDRAIL @ TOP RAIL
SCALE: 6"=1'-0"

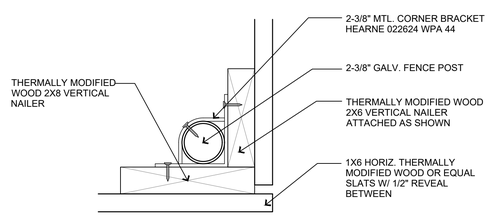


## 6 FENCE CORNER DETAIL
SCALE: 3"=1'-0"

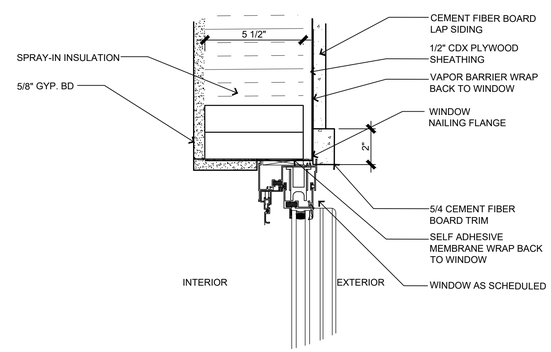


## 9 WINDOW JAMB DETAIL
SCALE: 3"=1'-0"

FORD POWELL &CARSON
Architects & Planners, Inc.
711 Navarro, Suite 400
San Antonio, Texas 78205
210/226-1246
92706
Architecture
Planning
Preservation
Interior Design

TEXAS PARKS & WILDLIFE

REGISTERED ARCHITECT RACHEL L. WRIGHT 20948 STATE OF TEXAS

# SOUTH LLANO RIVER STATE PARK
## HEADQUARTERS BUILDING RENOVATION AND EXPANSION
PROJECT NUMBER: 134245

DATE: 04.09.2021
DESIGNED BY: NP
DRAWN BY: JK,RF
REVIEWED BY: GC/AC
REVISED:
REVISED:
REVISED:

CONSTRUCTION DOCUMENTS

SHEET TITLE
SECTION DETAILS

SHEET NUMBER
A803

PATH: P:\92706_S_llano_SP\(17) Drawings\(8) CD's 100 Percent\(2) Headquarters\A801.dwg

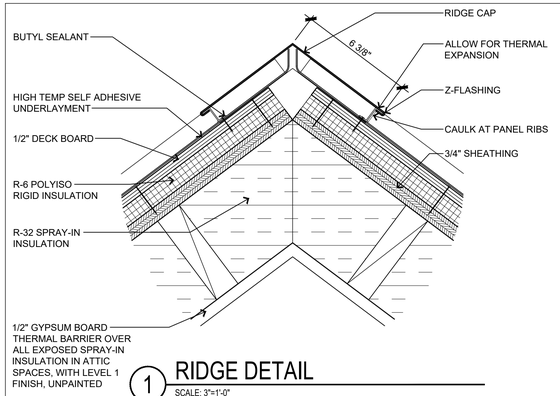


1 RIDGE DETAIL
SCALE: 3"=1'-0"

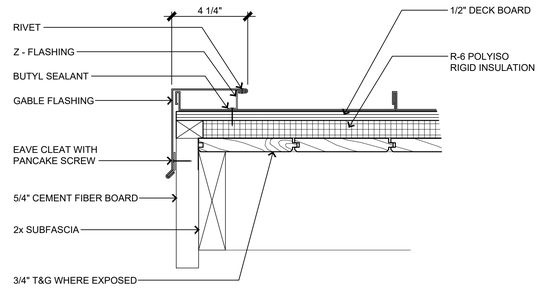


2 GABLE FLASHING DETAIL
SCALE: 3"=1'-0"

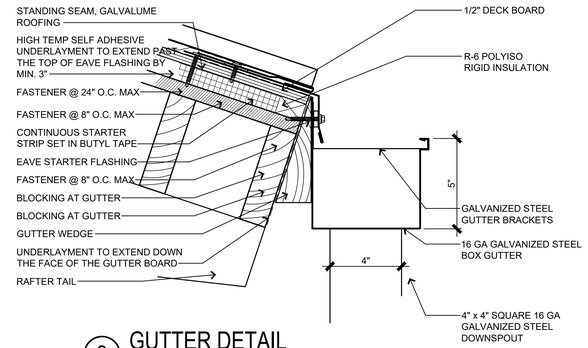


3 GUTTER DETAIL
SCALE: 3"=1'-0"

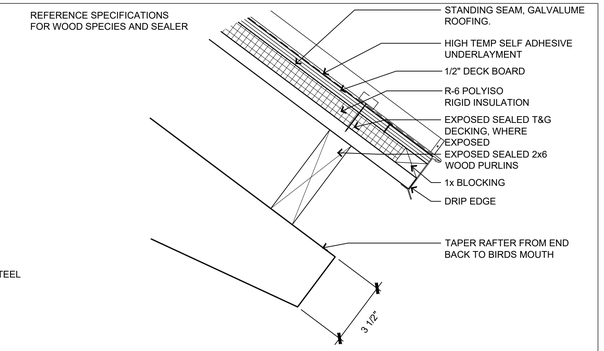


4 FASCIA DETAIL
SCALE: 3"=1'-0"

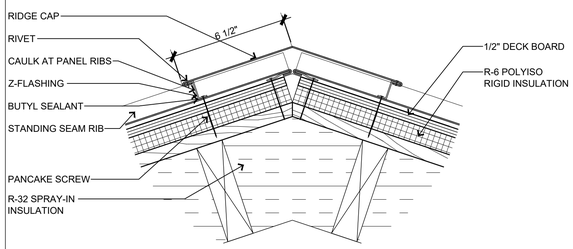


5 RIDGE CAP DETAIL
SCALE: 3"=1'-0"

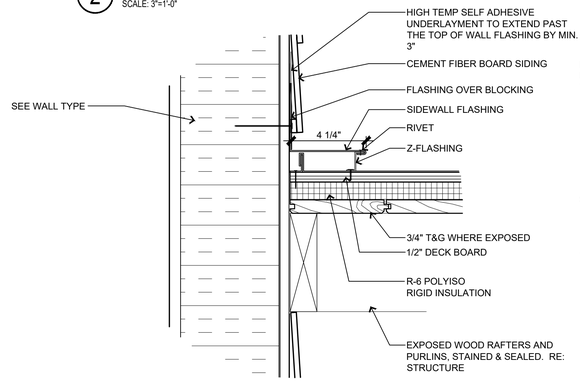


6 END WALL FLASHING DETAIL
SCALE: 3"=1'-0"

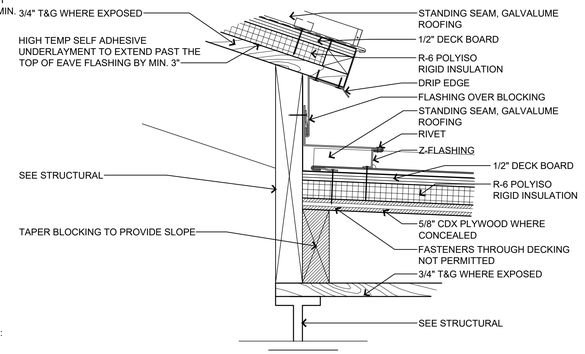


7 VALLEY DETAIL
SCALE: 3"=1'-0"

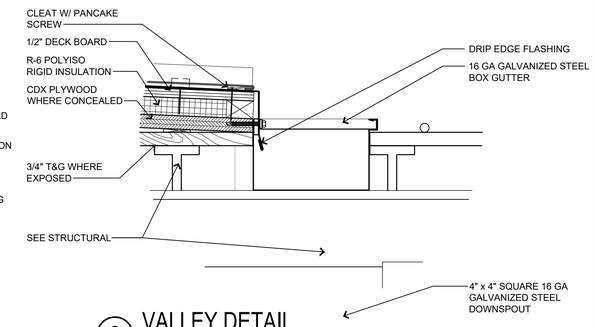


8 VALLEY DETAIL
SCALE: 3"=1'-0"

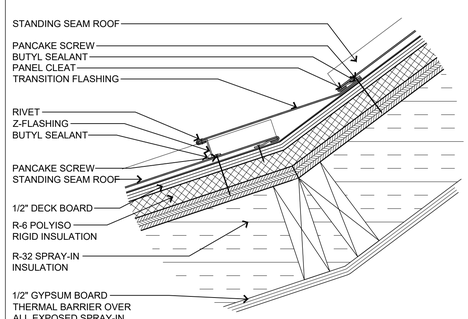


9 VALLEY DETAIL
SCALE: 3"=1'-0"

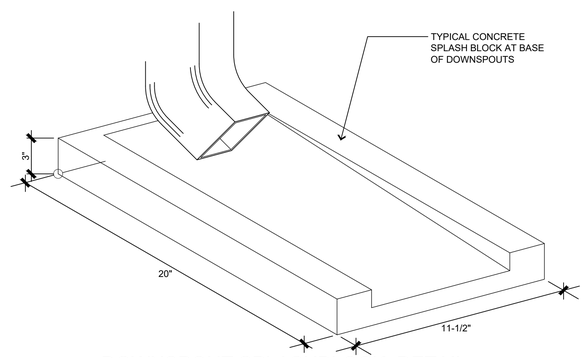


10 DOWNSPOUT SPLASHBLOCK DETAIL
SCALE: 3"=1'-0"

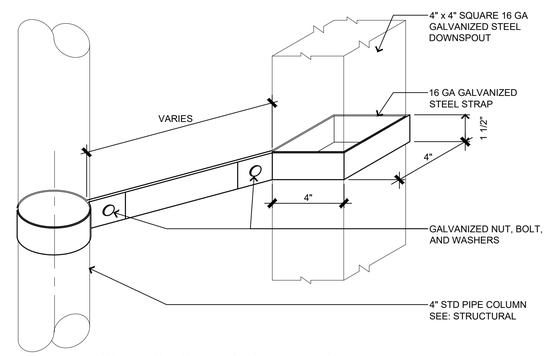


11 DOWNSPOUT BRACKET DETAIL
SCALE: 3"=1'-0"

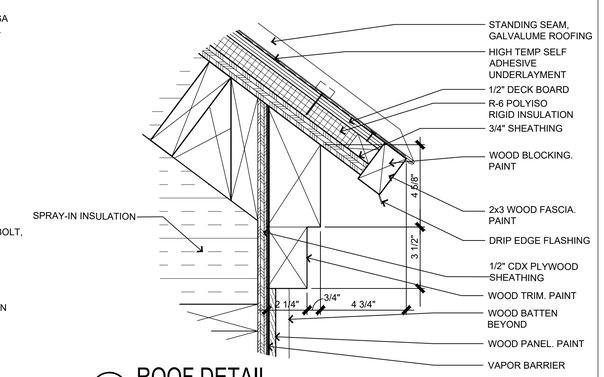


12 ROOF DETAIL
SCALE: 3"=1'-0"

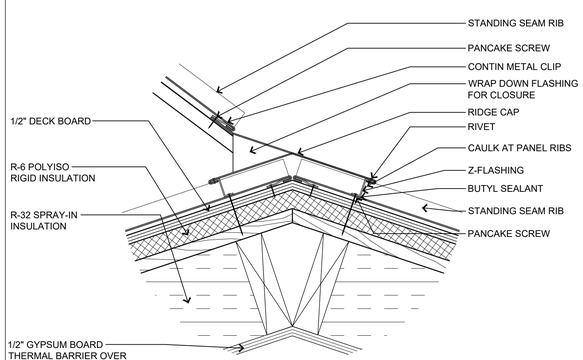


13 RIDGE ROOF DETAIL
SCALE: 3"=1'-0"

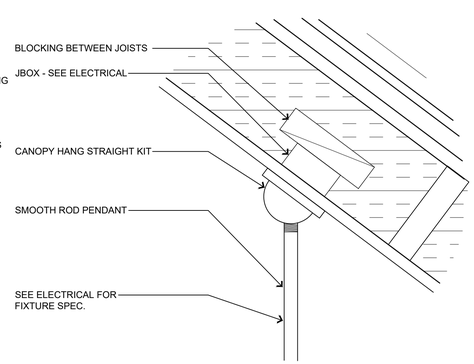


14 FIXTURE DETAIL
SCALE: 3"=1'-0"

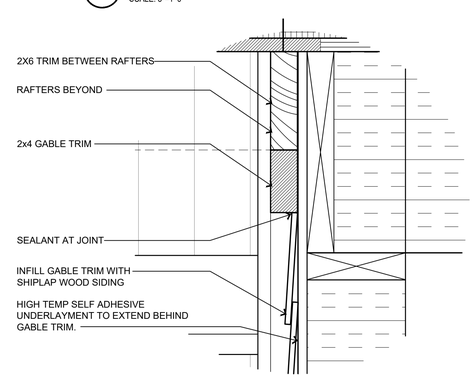


14 GABLE TRIM DETAIL
SCALE: 3"=1'-0"


FORD POWELL &CARSON
Architects & Planners, Inc.
Architecture
Planning
Preservation
Interior Design
711 Navarro, Suite 400
San Antonio, Texas 78205
210/226-1246
92706


TEXAS PARKS & WILDLIFE

REGISTERED ARCHITECT RACHEL L. H. WRIGHT 20948 STATE OF TEXAS

# SOUTH LLANO RIVER STATE PARK
## HEADQUARTERS BUILDING RENOVATION AND EXPANSION
PROJECT NUMBER: 134245

DATE: 04.09.2021
DESIGNED BY: NP
DRAWN BY: JK,RF
REVIEWED BY: GC/AC
REVISED:
REVISED:
REVISED:

CONSTRUCTION DOCUMENTS

SHEET TITLE
CONSTRUCTION DETAILS

SHEET NUMBER
A804

PATH: P:\92706_S_llano_SP\(17) Drawings\(8) CD's 100 Percent\(2) Headquarters\A801.dwg

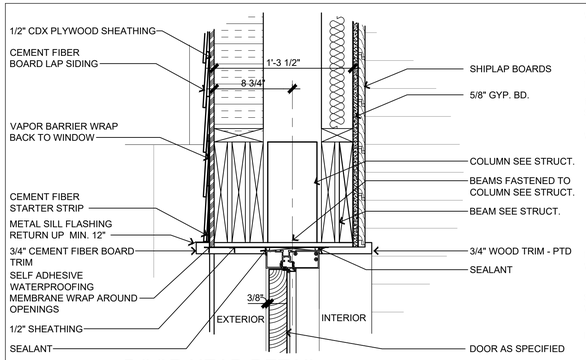


1 DOOR HEAD DETAIL
SCALE: 1 1/2"=1'-0"

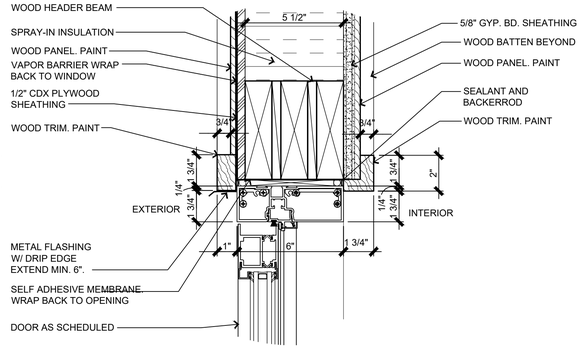


2 DOOR HEAD DETAIL
SCALE: 3"=1'-0"

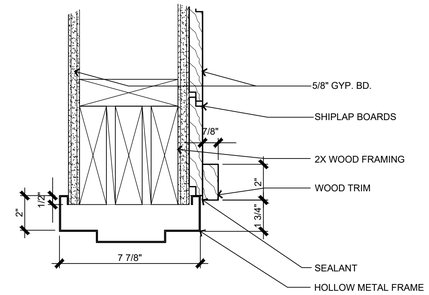


3 DOOR HEAD DETAIL
SCALE: 3"=1'-0"

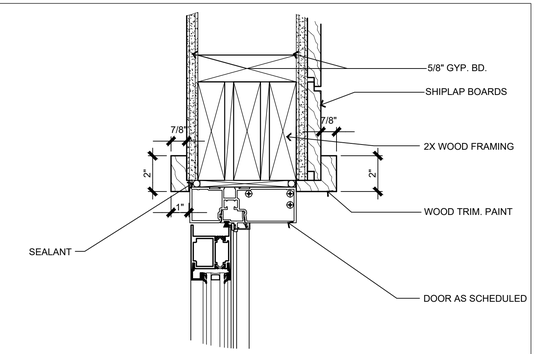


4 DOOR HEAD DETAIL
SCALE: 3"=1'-0"

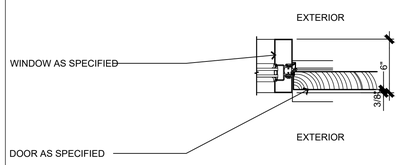


5 DOOR JAMB DETAIL
SCALE: 1 1/2"=1'-0"

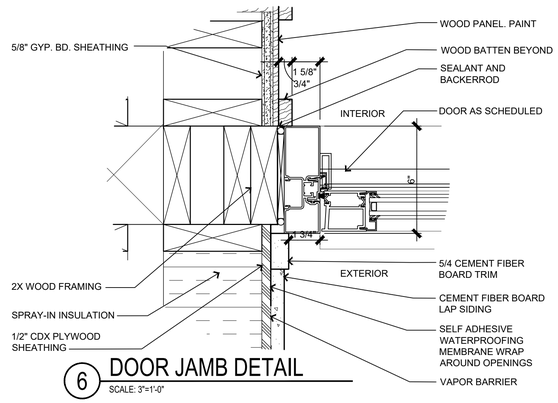


6 DOOR JAMB DETAIL
SCALE: 3"=1'-0"

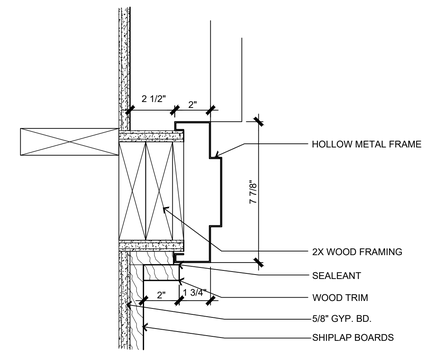


7 DOOR JAMB DETAIL
SCALE: 3"=1'-0"

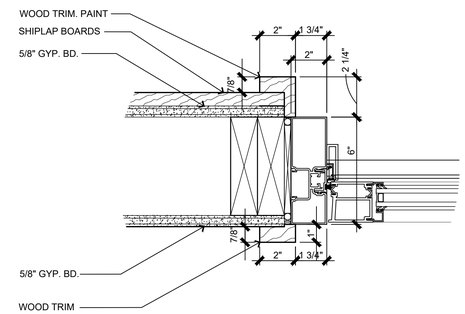


8 DOOR JAMB DETAIL
SCALE: 3"=1'-0"

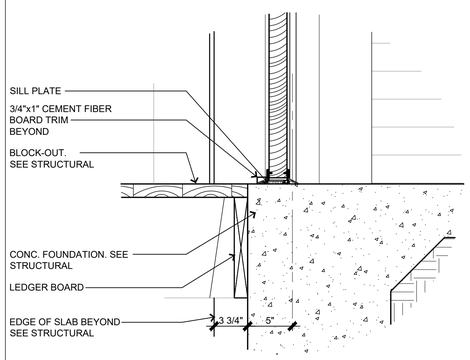


9 DOOR SILL DETAIL
SCALE: 1 1/2"=1'-0"

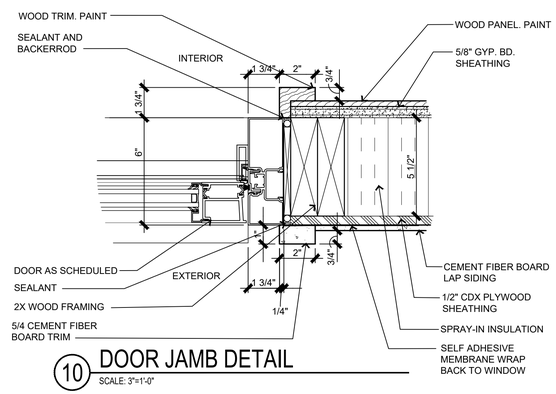


10 DOOR JAMB DETAIL
SCALE: 3"=1'-0"

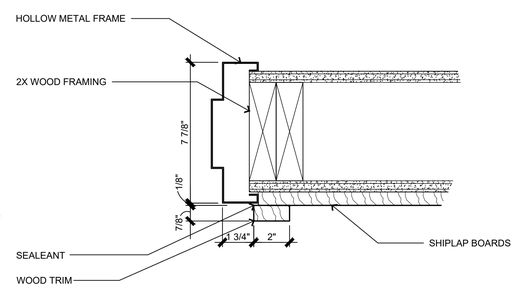


11 DOOR JAMB DETAIL
SCALE: 3"=1'-0"

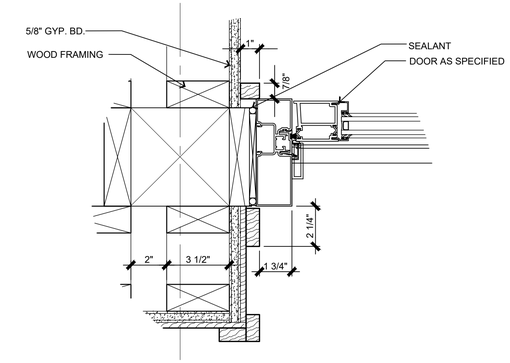


12 DOOR JAMB DETAIL
SCALE: 3"=1'-0"

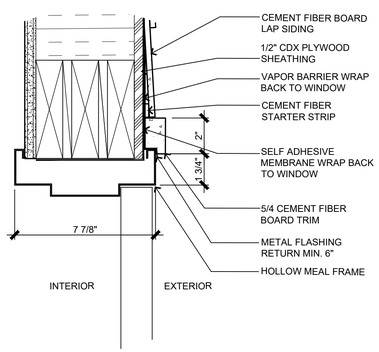


13 DOOR HEAD DETAIL
SCALE: 3"=1'-0"

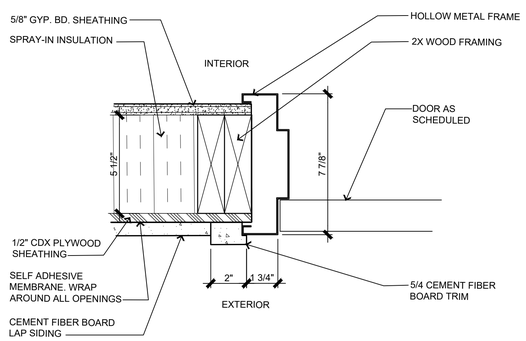


14 DOOR JAMB DETAIL
SCALE: 3"=1'-0"

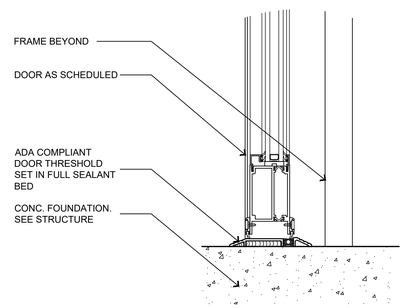


15 DOOR THRESHOLD
SCALE: 3"=1'-0"

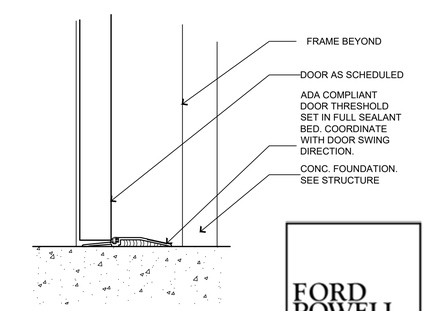


16 DOOR THRESHOLD
SCALE: 3"=1'-0"

FORD POWELL &CARSON
Architects & Planners, Inc.
711 Navarro, Suite 400
San Antonio, Texas 78205
210/226-1246
92706
Architecture
Planning
Preservation
Interior Design

TEXAS PARKS & WILDLIFE

REGISTERED ARCHITECT RACHEL H. WRIGHT 20948 STATE OF TEXAS

# SOUTH LLANO RIVER STATE PARK
## HEADQUARTERS BUILDING RENOVATION AND EXPANSION
PROJECT NUMBER: 134245

DATE: 04.09.2021
DESIGNED BY: NP
DRAWN BY: JK,RF
REVIEWED BY: GC/AC
REVISED:
REVISED:
REVISED:

CONSTRUCTION DOCUMENTS

SHEET TITLE
DOOR DETAILS

SHEET NUMBER
A805

PATH: P:\92706_S_llano_SP\(17) Drawings\(8) CD's 100 Percent\(2) Headquarters\A801.dwg

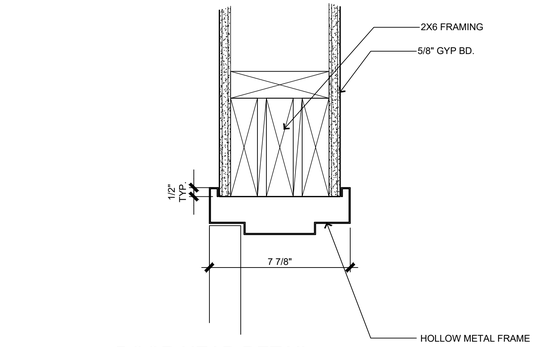


1 DOOR HEAD DETAIL
SCALE: 3"=1'-0"

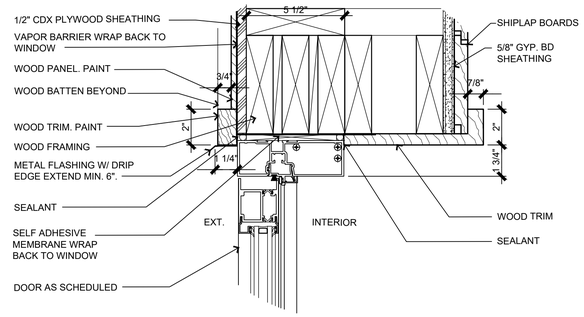


2 DOOR HEAD DETAIL
SCALE: 3"=1'-0"

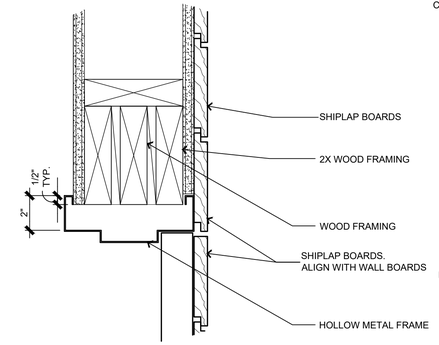


3 DOOR HEAD DETAIL
SCALE: 3"=1'-0"

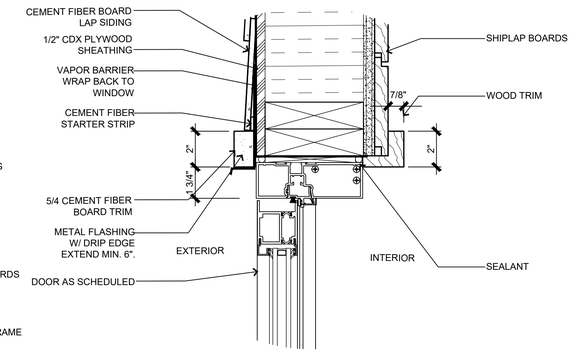


4 DOOR HEAD DETAIL
SCALE: 3"=1'-0"

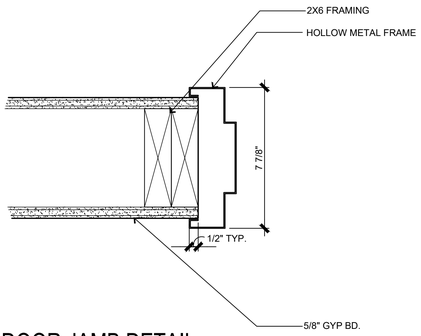


5 DOOR JAMB DETAIL
SCALE: 3"=1'-0"

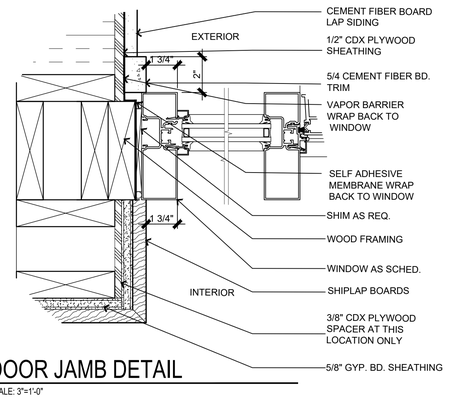


6 DOOR JAMB DETAIL
SCALE: 3"=1'-0"

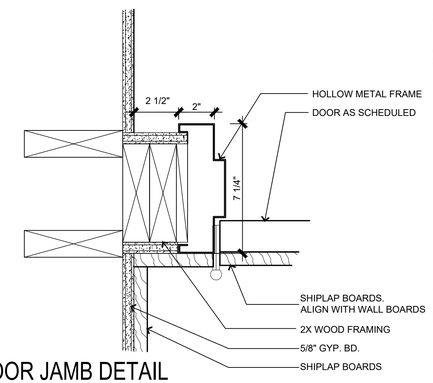


7 DOOR JAMB DETAIL
SCALE: 3"=1'-0"

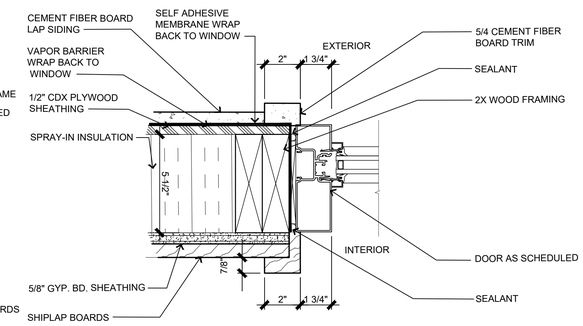


8 DOOR JAMB DETAIL @ SIDELITE
SCALE: 3"=1'-0"

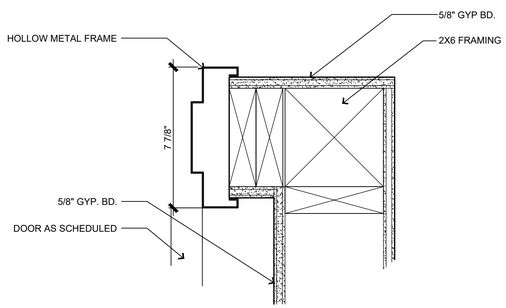


9 DOOR JAMB DETAIL
SCALE: 3"=1'-0"

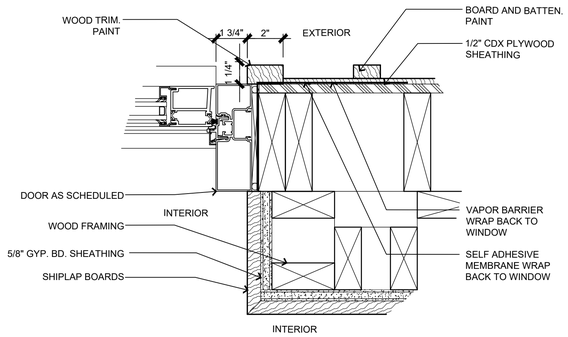


10 DOOR JAMB DETAIL
SCALE: 3"=1'-0"

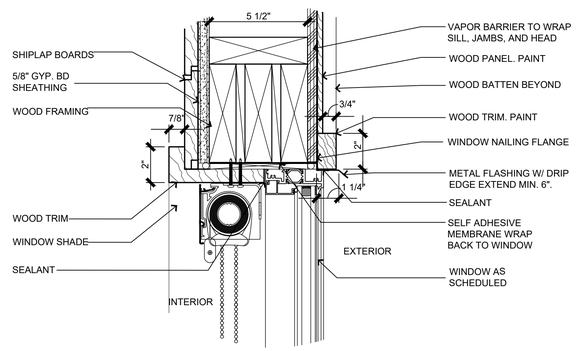


11 WINDOW HEAD DETAIL
SCALE: 3"=1'-0"

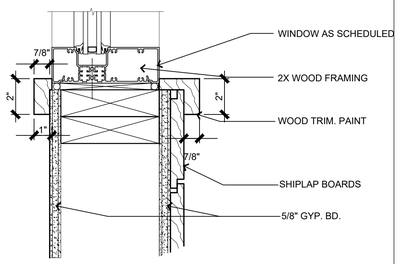


12 WINDOW SILL DETAIL
SCALE: 3"=1'-0"

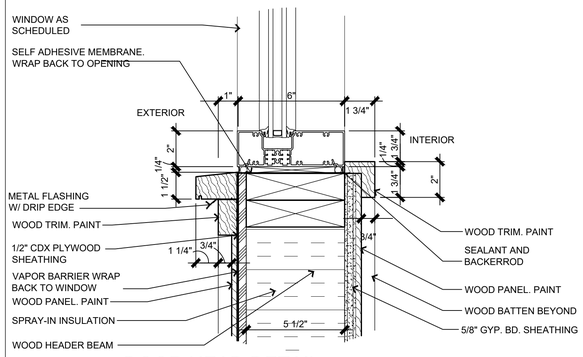


13 DOOR HEAD DETAIL
SCALE: 3"=1'-0"

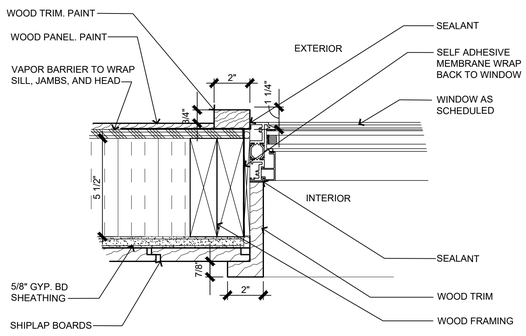


14 WINDOW JAMB DETAIL
SCALE: 3"=1'-0"

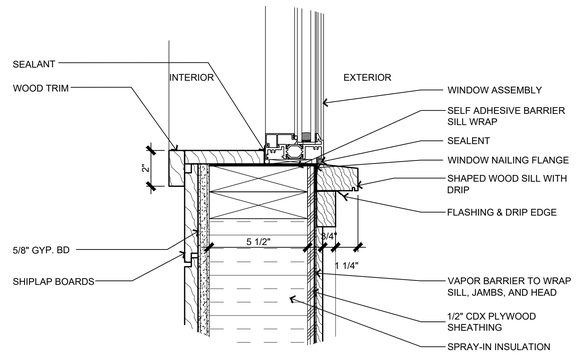


15 WINDOW SILL DETAIL
SCALE: 3"=1'-0"

FORD POWELL &CARSON
Architects & Planners, Inc.
Architecture
Planning
Preservation
Interior Design
711 Navarro, Suite 400
San Antonio, Texas 78205
210/226-1246
92706

TEXAS PARKS & WILDLIFE

REGISTERED ARCHITECT RACHEL L. WRIGHT 20948 STATE OF TEXAS

SOUTH LLANO RIVER STATE PARK
HEADQUARTERS BUILDING RENOVATION AND EXPANSION
PROJECT NUMBER: 134245

DATE: 04.09.2021
DESIGNED BY: NP
DRAWN BY: JK,RF
REVIEWED BY: GC/AC
REVISED:
REVISED:
REVISED:

CONSTRUCTION DOCUMENTS

SHEET TITLE
DOOR & WINDOW DETAILS

SHEET NUMBER
A806

PATH: P:\92706_S_llano_SP\(17) Drawings\(8) CD's 100 Percent\(2) Headquarters\A801.dwg

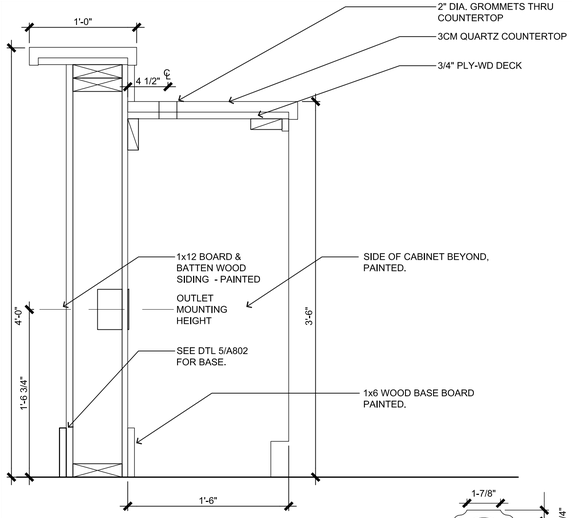


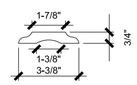


1 REG. DESK @ KNEE SPACE
SCALE: 1 1/2"=1'-0"

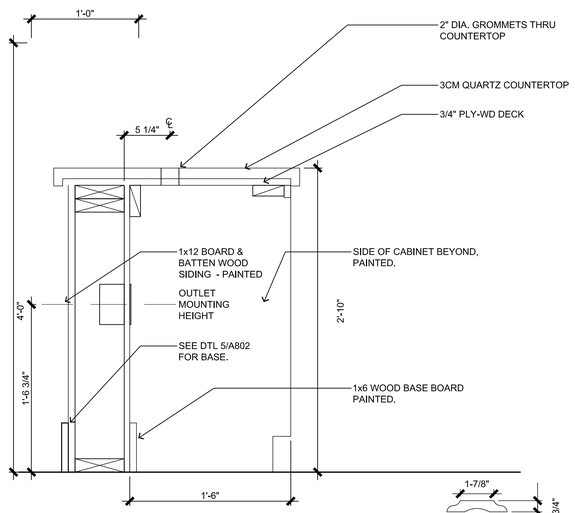


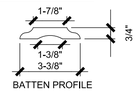


2 REG. DESK @ ADA HT.
SCALE: 1 1/2"=1'-0"

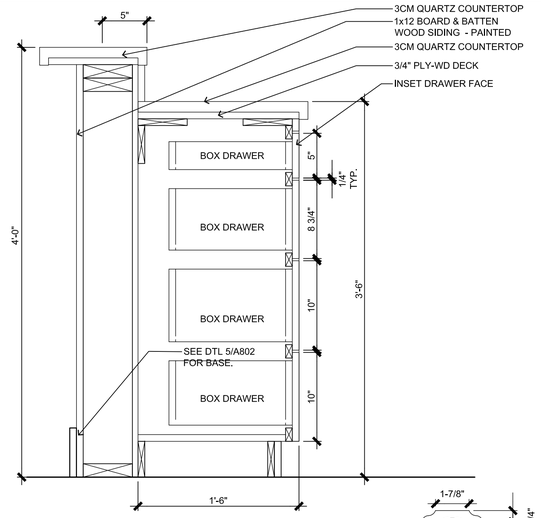


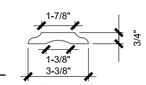


3 REG. DESK @ DRAWERS
SCALE: 1 1/2"=1'-0"

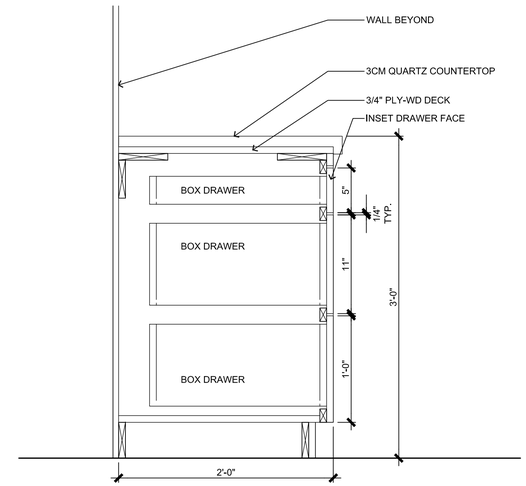


4 REG. DESK @ CABINET
SCALE: 1 1/2"=1'-0"

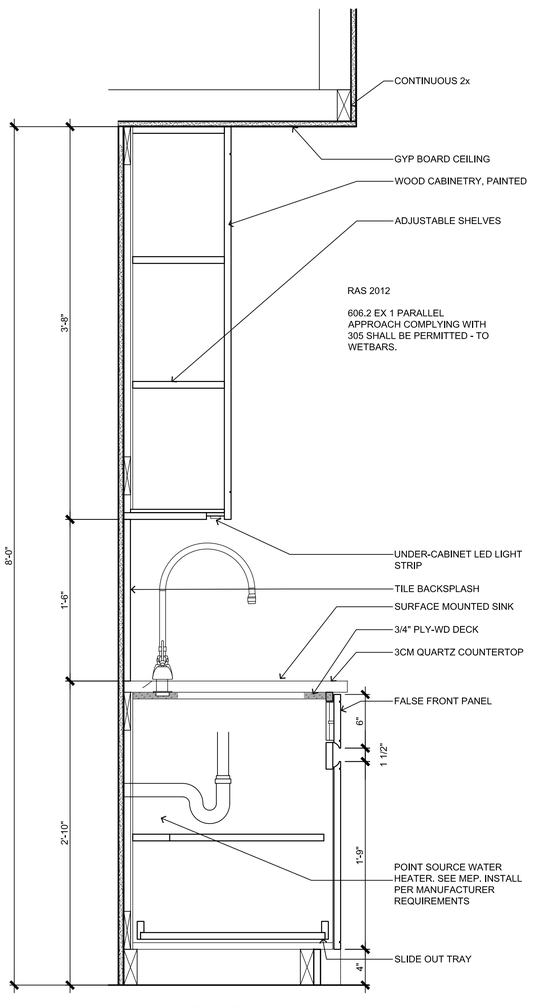


5 SINK @ WETBAR
SCALE: 1 1/2"=1'-0"

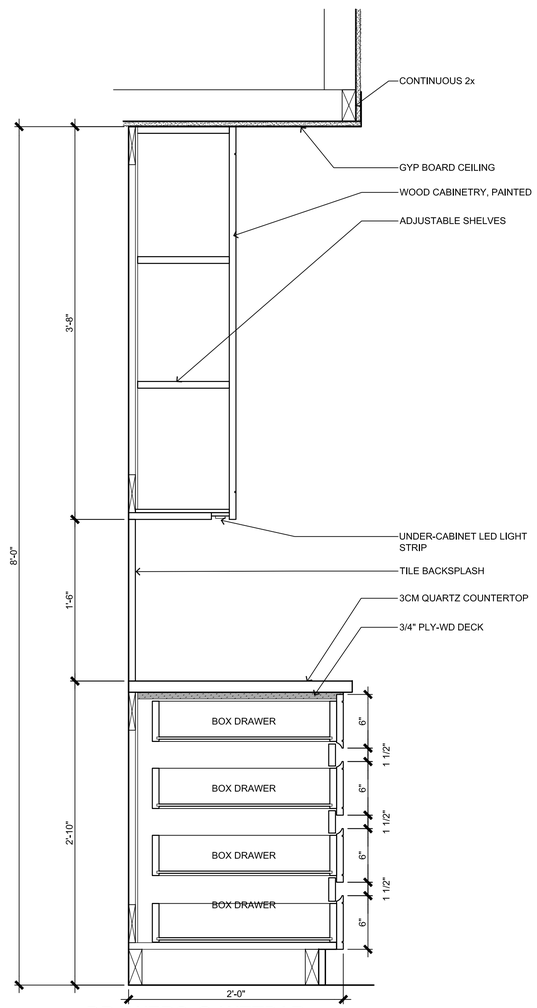


6 DRAWERS @ WETBAR
SCALE: 1 1/2"=1'-0"

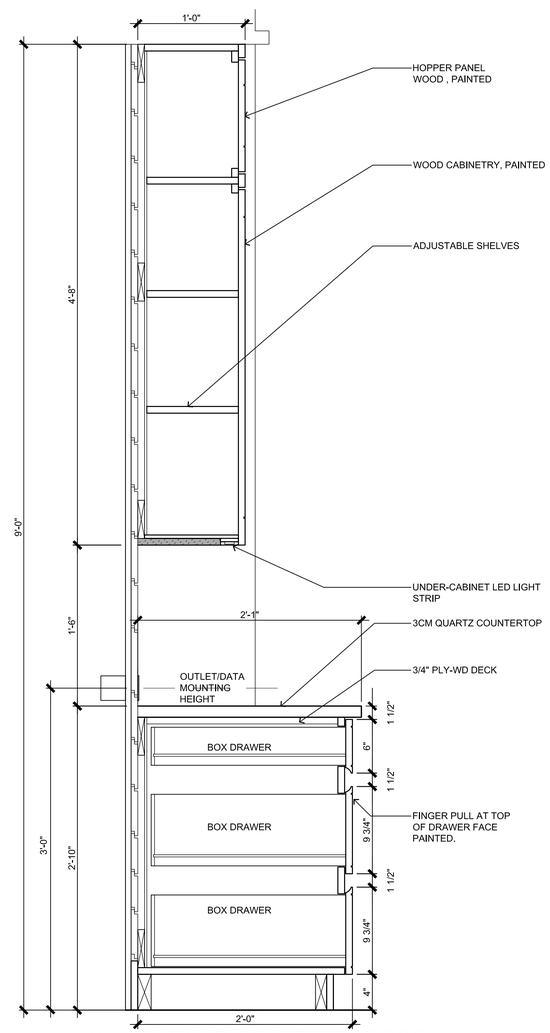


7 CASEWORK @ CONFERENCE ROOM
SCALE: 1 1/2"=1'-0"

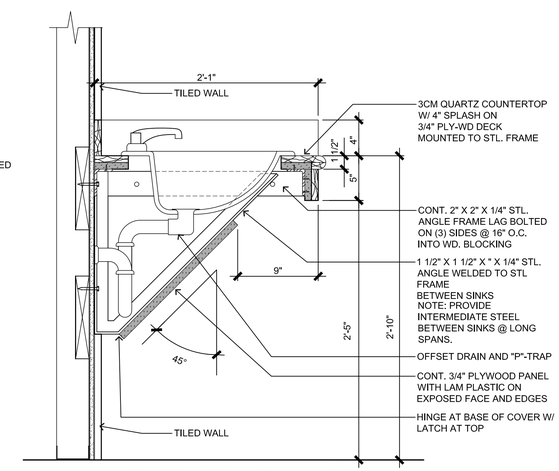


8 CASEWORK @ LAVATORY
SCALE: 1 1/2"=1'-0"

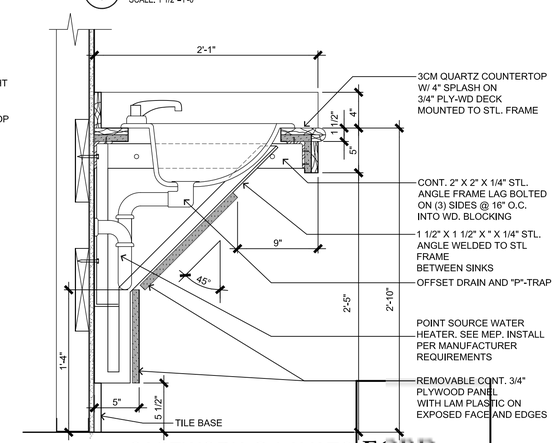


9 CASEWORK @ LAVATORY
SCALE: 1 1/2"=1'-0"

FORD POWELL & CARSON
Architects & Planners, Inc.
Architecture
Planning
Preservation
Interior Design
711 Navarro, Suite 400
San Antonio, Texas 78205
210/226-1246
92706

TEXAS PARKS & WILDLIFE

REGISTERED ARCHITECT
RACHEL L. H. WRIGHT
20948
STATE OF TEXAS

# SOUTH LLANO RIVER STATE PARK
## HEADQUARTERS BUILDING RENOVATION AND EXPANSION
PROJECT NUMBER: 134245

DATE: 04.09.2021
DESIGNED BY: NP
DRAWN BY: JK,RF
REVIEWED BY: GC/AC
REVISED:
REVISED:
REVISED:

CONSTRUCTION DOCUMENTS

SHEET TITLE
CASEWORK DETAILS

SHEET NUMBER
A901

PATH: \\FREENAS\Projects\92706_S_llano_SP\(17) Drawings\(8) CD's 100 Percent\(2) Headquarters\A901.dwg

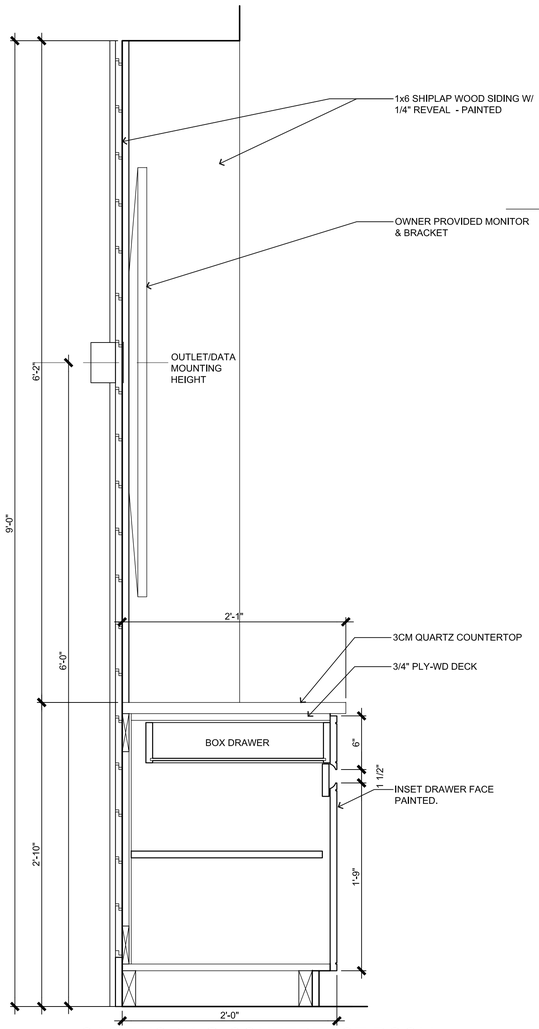


1 CASEWORK @ CONFERENCE ROOM
SCALE: 1 1/2"=1'-0"

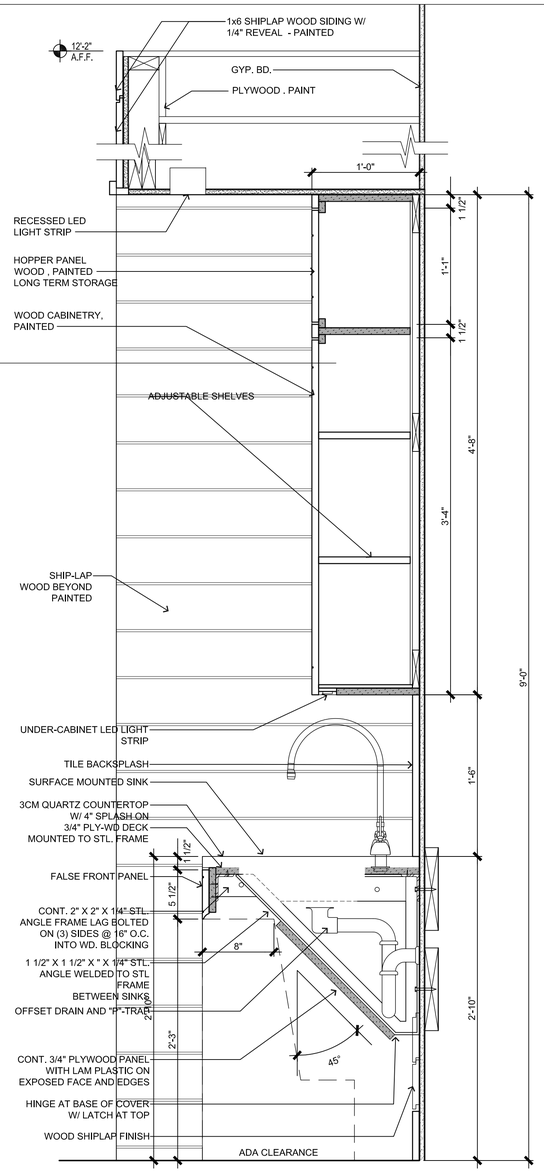


2 CASEWORK @ CONFERENCE ROOM
SCALE: 1 1/2"=1'-0"

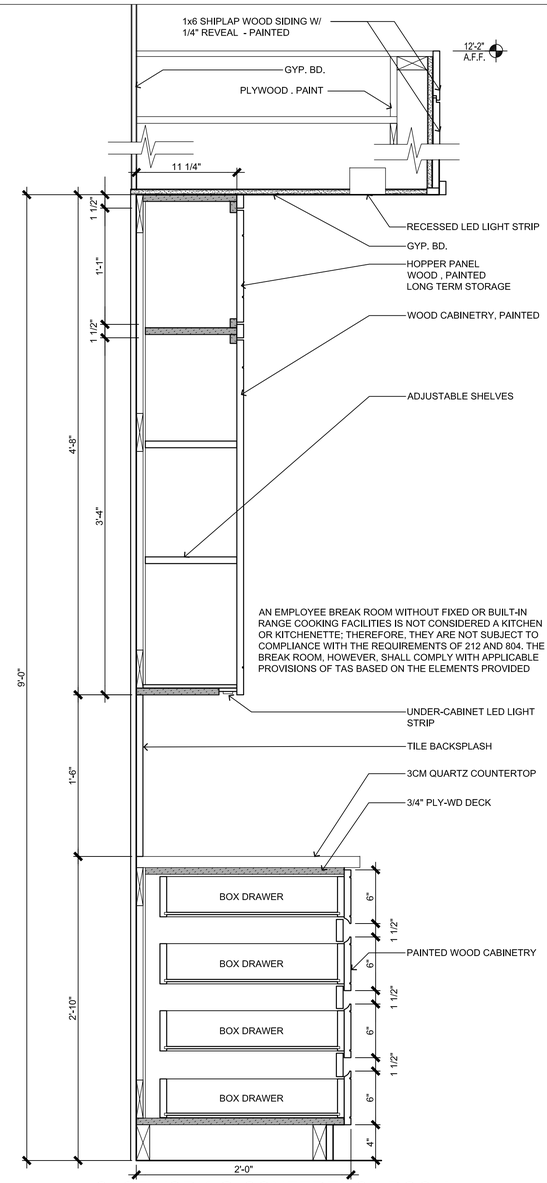


3 CASEWORK @ CONFERENCE ROOM
SCALE: 1 1/2"=1'-0"

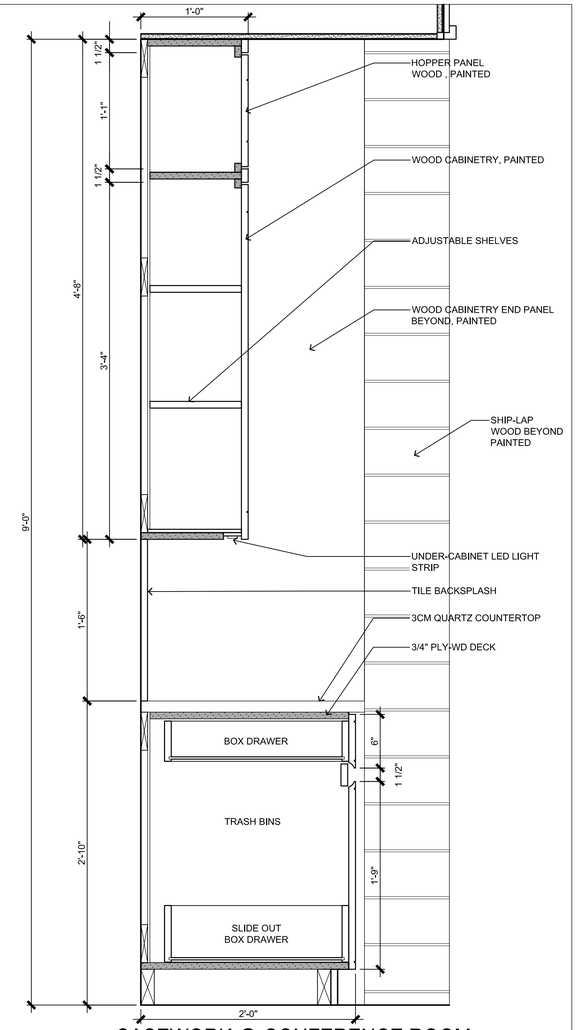


4 CASEWORK @ CONFERENCE ROOM
SCALE: 1 1/2"=1'-0"

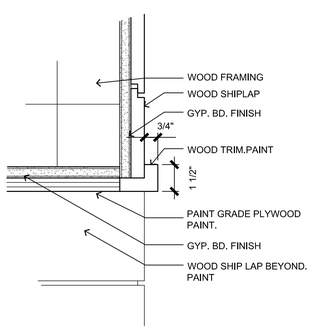


5 MILLWORK DETAIL
SCALE: 3"=1'-0"

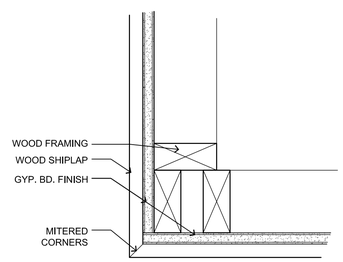


6 MILLWORK DETAIL
SCALE: 3"=1'-0"

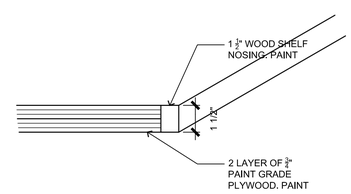


7 MILLWORK SHELF DETAIL
SCALE: 3"=1'-0"

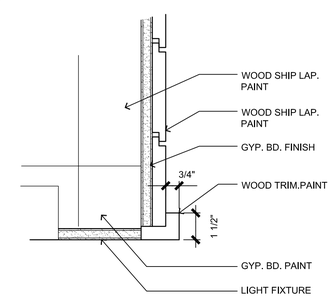


8 MILLWORK SHELF DETAIL
SCALE: 3"=1'-0"

FORD POWELL & CARSON Architects & Planners, Inc.
711 Navarro, Suite 400
San Antonio, Texas 78205
210/226-1246
92706

Architecture
Planning
Preservation
Interior Design

TEXAS PARKS & WILDLIFE

REGISTERED ARCHITECT RACHEL L. H. WRIGHT 20946 STATE OF TEXAS

# SOUTH LLANO RIVER STATE PARK
## HEADQUARTERS BUILDING RENOVATION AND EXPANSION
PROJECT NUMBER: 134245

DATE: 04.09.2021
DESIGNED BY: NP
DRAWN BY: JK,RF
REVIEWED BY: GC/AC
REVISED:
REVISED:
REVISED:

CONSTRUCTION DOCUMENTS

SHEET TITLE
CASEWORK DETAILS

SHEET NUMBER
A902

PATH: \\FREENAS\Projects\92706_S_llano_SP\(17) Drawings\(8) CD's 100 Percent\(2) Headquarters\A901.dwg

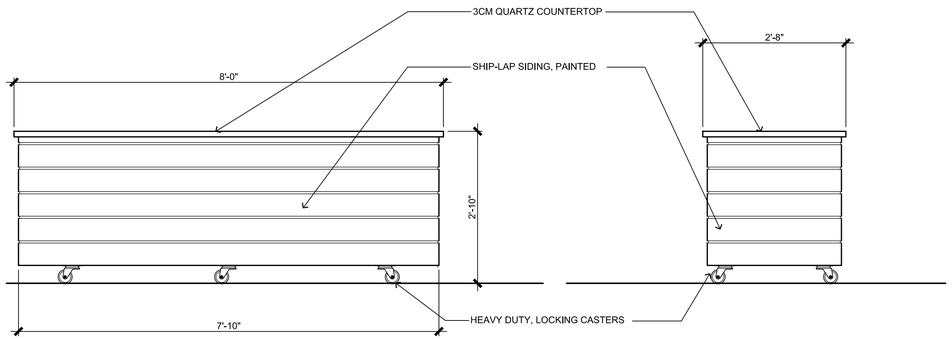


1 INTERIOR ELEVATION
SCALE: 3/4"=1'-0"




2 INTERIOR ELEVATION
SCALE: 3/4"=1'-0"

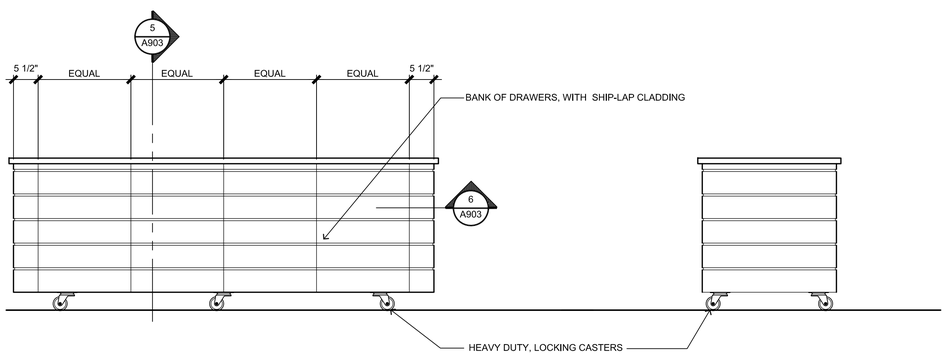


3 INTERIOR ELEVATION
SCALE: 3/4"=1'-0"

4 INTERIOR ELEVATION
SCALE: 3/4"=1'-0"

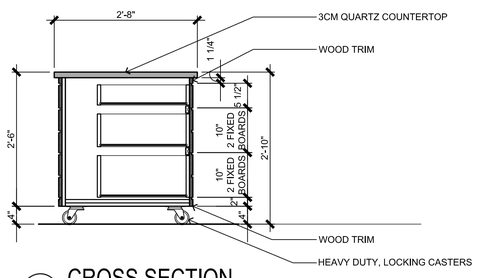


5 CROSS SECTION
SCALE: 3/4"=1'-0"

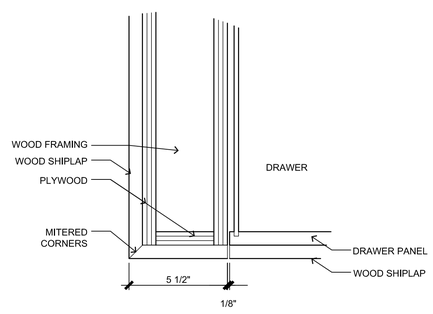


6 MILLWORK DETAIL
SCALE: 3"=1'-0"

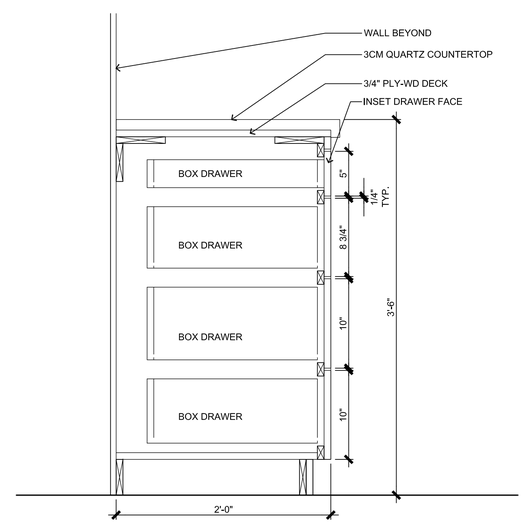


7 WORK STATION @ DAY USE
SCALE: 1 1/2"=1'-0"

TEXAS PARKS & WILDLIFE

REGISTERED ARCHITECT RACHEL L. H. WRIGHT 20946 STATE OF TEXAS

SOUTH LLANO RIVER STATE PARK
HEADQUARTERS BUILDING RENOVATION AND EXPANSION
PROJECT NUMBER: 134245

DATE: 04.09.2021
DESIGNED BY: NP
DRAWN BY: JK,RF
REVIEWED BY: GC/AC
REVISED:
REVISED:
REVISED:

CONSTRUCTION DOCUMENTS

SHEET TITLE
CASEWORK DETAILS

SHEET NUMBER
A903

FORD POWELL & CARSON Architects & Planners, Inc
Architecture
Planning
Preservation
Interior Design
711 Navarro, Suite 400
San Antonio, Texas 78205
210/226-1246
92706

PATH: \\FREENAS\Projects\92706_S_llano_SP\(17) Drawings\(8) CD's 100 Percent\(2) Headquarters\A901.dwg

## COORDINATION

1. Only large openings in structural framing members are shown on the structural drawings. However, all sleeves, embeds, inserts, openings and frames that are necessary for the work shall be provided. The Contractor shall coordinate with all trades sizes, locations and placement. All openings and embedded items which have an effect on the structure shall be submitted to the Engineer for review.
2. Refer to Architectural, Mechanical, Electrical and Plumbing drawings for floor elevations, location of depressed or elevated floor areas, slopes and drains.
3. Contractor shall coordinate the requirements for building equipment supported on or from the structure. Submittals identify all equipment including size, dimensions, clearances, accessibility, weights and reactions. Any deviations from specified equipment shall be noted on the submittals.
4. Shop drawings shall be prepared for all structural items and submitted for review by the Engineer. Contract Drawings shall not be reproduced and used as shop drawings. All items deviating from the Contract Drawings or from previously submitted shop drawings shall be noted.
5. The details designated as "Typical Details" apply generally to the Drawings in all areas where conditions are similar to those described in the detail
6. The design and provision of all temporary supports required for the execution of the contract such as guys, braces, shores, reshores, falsework, supports and anchors are not included in these drawings and shall be the responsibility of the Contractor. Temporary supports shall not result in the overstress or damage to the structure.

## CODES

1. IBC 2015 International Building Code.
2. Wind and Earthquake Loads: Minimum Design Loads for Building and Other Structures, American Society of Civil Engineers, ASCE 7-10
3. Structural Concrete: Building Code Requirements for Reinforced Concrete, American Concrete Institute, ACI 318-14.
4. Structural Steel: Steel Construction Manual, American Institute of Steel Construction, Thirteenth Edition. Specification for Structural Steel Buildings, AISC 360-10.
5. Wood Framing: National Design Specification (NDS) For Wood Construction with 2015 Supplement, American Forest and Paper Association, AF&PA NDS-2015 and Special Design Provisions for Wind and Seismic, ANSI/AF&PA SDPWS-12.
6. Wood Structural Panels: Panel Design Specification, American Plywood Association, APA PDS-12, Plywood Design Specification Supplements 1-5, and DOC PS 1 or PS 2.
7. Prefabricated Composite Wood Products: Products shall be proven by testing as demonstrated either by ICBO and NRB acceptance or through a test program meeting requirements of ASTM D 5055 for wood I-joists and ASTM D 5456 for Structural Composite Lumber (SCL).
8. Prefabricated Metal-plate-connected Wood Trusses: National Design Standard for Metal-plate-connected Wood Truss Construction, TPI 1-07.

## DESIGN LOADS

1. Live Loads

| | |
|---|---|
| a. Office (not including partitions) | 50 psf |
| b. Public areas, corridors, lobbies | 100 psf |
| c. Mechanical Rooms | 150 psf |
| d. Storage (minimum) | 125 psf |
| e. Roof | 20 psf |
| f. Retail, First floor | 100 psf |
| g. Restrooms | 50 psf |
| h. Stairs | 100 psf |
| i. Partition at areas with 80 psf live load or less | 15 psf |
| j. Awnings or canopies | 20 psf |

2. Dead Loads include the self weight of the structural elements and the following superimposed loads:

| | |
|---|---|
| a. Ceiling and Mechanical at roof | 10 psf |
| b. Roofing and rigid insulation | 5 psf |
| c. Floor finish | 5 psf |

3. Wind Loads

a. Wind Lateral Load on Structural Frame is based on the following:

| | |
|---|---|
| i) Ultimate Wind Speed, $V_{ult}$ | 115 mph |
| ii) Basic Wind Speed, $V_{asd}$ (3-sec. gust) | 90 mph |
| iii) Wind Importance Factor, I | 1.0 |
| iv) Wind Exposure | C |
| v) Internal Pressure Coefficient, $GC_{pi}$ | ±0.18 |
| vi) Component & Cladding Design Pressures based on $V_{ult}$: | |

| | | |
|---|---|---|
| Effective Area: | ≤10ft² | (Overhangs) |
| Zone 1 | +17.6 psf; -27.9 psf | +16.0 psf; -23.3 psf |
| Zone 2 | +17.6 psf; -48.6 psf | +16.0 psf; -56.9 psf |
| Zone 3 | +17.6 psf; -71.9 psf | +16.0 psf; -95.7 psf |
| Zone 4 | +30.5 psf; -33.1 psf | |
| Zone 5 | +30.5 psf; -40.8 psf | |
| Effective Area: | 50ft² | (Overhangs) |
| Zone 1 | +16.0 psf; -26.1 psf | +16.0 psf; -21.5 psf |
| Zone 2 | +16.0 psf; -39.6 psf | +16.0 psf; -56.9 psf |
| Zone 3 | +16.0 psf; -61.0 psf | +16.0 psf; -74.0 psf |
| Zone 4 | +27.3 psf; -29.9 psf | |
| Zone 5 | +27.3 psf; -34.5 psf | |
| Effective Area: | >100ft² | (Overhangs) |
| Zone 1 | +16.0 psf; -25.3 psf | +16.0 psf; -20.7 psf |
| Zone 2 | +16.0 psf; -35.7 psf | +16.0 psf; -56.9 psf |
| Zone 3 | +16.0 psf; -56.4 psf | +16.0 psf; -64.6 psf |
| Zone 4 | +25.9 psf; -28.5 psf | |
| Zone 5 | +25.9 psf; -31.7 psf | |

NOTE:
Zone 1 = Interior roof area not in Zones 2 or 3.
Zone 2 = Perimeter roof area not in Zone 3 (4'-6" strips).
Zone 3 = Corner roof areas where Zone 2 strips intersect.
Zone 4 = Wall areas not in Zone 5.
Zone 5 = Wall corner areas (4'-6" strips).

b. Calculate the effective area for each component & cladding element, as defined by ASCE 7, depending on length and location. Effective area shall be the maximum of the following:

Effective Area = Length x Tributary Width (OR) Length x (Length/3)

c. Interpolation of uplift pressures is allowed between effective areas.

4. Roof Snow Loads

a. Ground Snow Load 5 psf

5. Earthquake Loads

a. Seismic Lateral Load on Structural Frame is based on the following:

| | |
|---|---|
| i) Seismic Importance Factor, I | 1.0 |
| Occupancy Category | II |
| ii) Mapped Spectral Response Accelerations | |
| $S_S$ | 0.079g |
| $S_1$ | 0.029g |
| iii) Site Class | D |
| iv) Spectral Response Coefficients | |
| $S_{DS}$ | 0.084g |
| $S_{D1}$ | 0.046g |
| v) Seismic Design Category | A |
| vi) Basic Seismic-Force-Resisting System: | light-frame wood walls sheathed with wood structural panels |
| vii) Design Base Shear | 0.013*W kips |
| viii) Seismic Response Coefficient, $C_S$ | 0.013 |
| ix) Response Modification Factor, R | 6.5 |
| x) Analysis Procedure | Equivalent lateral force procedure |

6. Loading for mechanical rooms and kitchens are based on the weights of equipment and concrete pads as indicated on the contract documents. Any revisions in equipment type, size, or quantity shall be reported to the Architect immediately for verification of the structural design.
7. Roof live loads noted above have been reduced in accordance with the building code. Floor live loads have not been reduced.

## BUILDING MOVEMENTS

1. The building movements specified herein are anticipated to occur and shall be taken into account by the Contractor in the design, detailing, and installation of the building elements.
2. Spandrel beam deflections: Provisions shall be made in the building cladding for relative floor to floor vertical deflections of 3/8"
3. Interior floor/roof deflections: Provisions shall be made in interior partitions and other elements supported by or attached to the floors or roofs for relative floor to floor vertical deflections of 3/4".
4. Lateral building drift: Provisions shall be made in building cladding and other architectural finishes for relative floor to floor lateral deflections of story height/400.

## FIRE RESISTANCE

1. The structural system is designed and detailed to provide the following fire resistance in accordance with the building code fire resistance standards:

| | |
|---|---|
| Floor assembly | 0 hours |
| Roof assembly | 0 hours |
| Structural frame | 0 hours |
| Interior bearing walls | 0 hours |
| Exterior bearing walls | 0 hours |

2. The structural frame consists of columns and members framing into columns.
3. For establishment of fire resistance ratings, the structural framing shall be considered unrestrained.

## SUBMITTALS

1. Coordinate with Owner's Uniform General Conditions.
2. Shop drawings shall be prepared for all structural items and submitted for review by the Engineer. Contract Drawings shall not be reproduced and used as shop drawings. All items deviating from the Contract Drawings or from previously submitted shop drawings shall be clouded.
3. The contractor shall review shop drawings for compliance with the contract documents and shall certify that he has done so by a stamp noting that the drawings have been "Approved" and which bears the signature (or initials) of an authorized representative of the contractor and the date. Submittals which do not reflect the contractor's approval, signature and date will be returned without review.
4. The contractor shall be responsible for delays caused by rejection of inadequate shop drawings.
5. Where review and return of shop drawings is required or requested, the engineer will review each submittal and, where possible, return within 2 weeks of receipt.
6. Corrections or comments on shop drawings or manufacturer's data sheets do not relieve the contractor from compliance with requirements of the plans and specifications. The engineer's review is for general conformance with the requirements of the contract documents. The contractor is responsible for confirming and correcting all quantities and dimensions, selecting fabrication processes and techniques of construction, and coordinating his work with that of all other contractors.
7. Refer to individual sections for specific submittal requirements.

## TESTING LABORATORY SERVICES

1. Work specified herein shall be performed by a qualified independent Testing Laboratory, selected and paid by the Owner.
2. Filling and Backfilling operation:

a. Analyze backfill samples delivered by the contractor to determine compliance with gradation and quality requirements of the geotechnical report.

b. Make in place compaction tests for moisture content, moisture density relationship, and density of materials in place. Perform test once for every 5000 square feet or 3 tests per lift, whichever is greater.

4. Footing excavation: Inspect the excavations to determine that the proper bearing stratum is obtained and utilized for bearing and that excavations are properly clean and dry before concrete is placed.
5. Concrete inspection and testing:

a. Secure composite samples of concrete at the jobsite in accordance with ASTM C172.

b. Mold and cure three specimens from each sample in accordance with ASTM C31. Test specimens in accordance with ASTM C39. Two specimens shall be tested at 28 days for acceptance and one shall be tested at seven days for information.

c. Perform one strength test (three cylinders) for each pour.

d. Make one slump test for each set of cylinders following the procedural requirements of ASTM C143 and C172.

e. Determine total air content of air entrained concrete in accordance with ASTM C231. Perform one test for each strength test.

6. Concrete Reinforcement: Inspect all concrete reinforcing steel and embedded metal assemblies prior to placement of concrete for compliance with Contract Documents and shop drawings. All instances of non-compliance shall be immediately brought to the attention of the contractor for correction, and if uncorrected, reported to the engineer.
7. Expansion Anchors: Provide continuous inspection of expansion bolt installation to ensure that holes are of the specified size, and that bolts are properly installed including application of minimum installation torques.
8. Structural steel: Field inspection of proper erection of all members, visual examination of all field welding, visual inspection of all bolts, inspection of all shop fabricated members upon arrival at the jobsite for conformance with accepted fabrication and erection drawings, verification of welder's certificates.

## EXCAVATION PROTECTION

1. The sides of all excavations greater than 5'-0" in depth shall be laid back to a slope of 3 horizontal to 2 vertical, unless the following applies:

a. A steeper slope is allowed by the geotechnical engineer for the particular location and site conditions in question.

b. A retention system is indicated on the Contract Drawings.

c. An alternative protective system is submitted by the Contractor and allowed by the Owner.

2. Contractor shall submit Drawings and calculations sealed by a Registered Engineer licensed in the State of Texas for the design of any alternative protective systems. Alternative protective systems shall be designed to resist the soil pressures stipulated in the project geotechnical report prepared by Arias Geoprofessionals, dated June 17, 2019 with July 10, 2019 revisions. In addition, the design shall consider surcharges created by construction equipment, excavation spoil, and other surface encumbrances.
3. Contractor shall comply with all Occupational Safety and Health Administration standards and all other regulatory agency standards regarding excavation safety.

## BUILDING PAD PREPARATION

1. Select structural fill material shall be TxDOT Item 247, Type A, Grade 1 or 2.
2. Prior to placing fill material, remove all organic and other deleterious material from the existing subgrade and undercut the existing soils a minimum of 4'-0" for a distance of 5'-0" beyond building line and/or adjacent sidewalks. Proof-roll exposed surfaces with a 20-ton roller for a minimum of 20 passes in alternating directions, any weak zones are to be undercut and replace with select fill. All exposed surfaces shall then be scarified to a depth of 18 inches, watered as required and recompacted to a minimum of 95 to 100 percent of the maximum dry density as defined by ASTM D 698 (Standard Proctor Test) at a moisture content within 0 to +4 percent of the optimum moisture content.
3. Select structural fill shall be placed in 6 inch loose lifts, watered as required and compacted to a minimum of 98 percent of the maximum dry density as defined in ASTM D 698 at a moisture content within -1 to +3 percent of the optimum moisture content.
4. Compaction and moisture content of subgrade and each lift of structural fill shall be inspected and approved by a qualified engineering technician, supervised by a Geotechnical Engineer.
5. Provide a 2 foot thick clay cap at perimeter of building to protect pad from moisture intrusion. Cap can be formed of on-site clays, placed in 6" lifts, moisture-conditioned to between 0 and +4 percentage points of the optimum moisture content, and compacted to 95 percent of the maximum dry density as defined by ASTM D 698 (Standard Proctor Test). Cap shall slope away from building.
6. Slab on grade shall be placed over a minimum of 4 ft. select structural fill.
7. Provide a 95 mil geotextile membrane as vapor/termite barrier. Place barrier in accordance with manufacturer's recommendation on top of structural fill.
8. Building pad preparation information is based on a geotechnical report provided by Arias Geoprofessionals dated June 17, 2019 with July 10, 2019 revisions.

## CONCRETE FOOTINGS

1. Concrete footing design is based on an allowable net bearing capacity of 2,000 psf in accordance with the geotechnical report dated June 17, 2019 with July 10, 2019 revisions by Arias Geoprofessionals.
2. Bearing stratum shown on the footing details is compacted select fill.
3. Footings not specifically located on the plan shall be located on centerline of pilaster or column above. Where no pilaster or column occurs, locate on centerline of wall or beam.
4. Provide dowels from footings into concrete above using same bar size and number as shown for pilaster or column above. Where no pilaster or column occurs, use 4-#7 dowels. Extend dowels 30 bar diameters into pier and wall, beam, pilaster or column u.o.n.
5. Elevation of top of plinths/footings, unless noted otherwise on drawings, is at the bottom of the deepest intersecting beam or wall supported by the footing.
6. Footing excavations shall be to neat lines and shall be free of loose or wet materials.
7. Footing reinforcing and concrete shall be placed immediately after excavations are complete; in no case shall a footing be excavated that cannot be placed by the end of the workday.
8. See plans and schedules for footing sizes, reinforcing and depths.
9. Reinforcing steel shop drawings shall include placing drawings for templates to set dowels in footings.
10. All footings shall be inspected by a representative of Arias Geoprofessionals in order to ensure that the proposed bearing material has been reached in accordance with the recommendations given in the geotechnical report and that the footing has been constructed to specified size, with detailed reinforcing, and to specified tolerances.

## CAST IN PLACE CONCRETE

1. Cast in place concrete shall meet the following requirements:

| Class | 28 Day Strength | Type | Aggregate Size | Slump | Use |
|---|---|---|---|---|---|
| A | 4000 psi | NWC3S | 1" | 5"-7" | All |

2. Fly ash shall not be in architecturally exposed concrete.
3. Provide 5 percent plus or minus 1 ½ percent of entrained air in concrete permanently exposed to the weather and elsewhere at the contractors option.
4. Concrete shall have a maximum cured density of 120 pounds per cubic foot.
5. Horizontal construction joints in concrete pours shall be permitted only where indicated on the drawings. All vertical construction joints shall be made in the center of spans in accordance with the typical details. Contractor shall submit proposed locations for construction joints not shown on drawings for review by the Architect and Structural Engineer. Additional construction joints may require additional reinforcing as specified by the Engineer which shall be provided by the contractor at no additional cost to the owner.
6. Embedded conduits, pipes, and sleeves shall meet the requirements of ACI 318-14, Sections 20.7 and 26.8, including the following:

a. Conduits and pipes embedded within a slab, wall, or beam (other than those passing through) shall not be larger in outside dimension than 1/3 the overall thickness of the slab, wall or beam in which they are embedded.

b. Conduits, pipes and sleeves shall not be spaced closer than three diameters or widths on center.

7. Concrete pours shall not exceed 5000 square feet or 100 linear feet on each side without prior approval by the Architect for each pour.
8. Submittal: Submit proposed mix designs in accordance with ACI 301, chapter 3.9. Each proposed mix design shall be accompanied by a record of past performance based on at least 30 consecutive strength tests, or by three laboratory trial mixtures with confirmation tests.

## SLAB ON GRADE

1. Slab on grade shall be poured in strips not to exceed 30'-0".
2. Provide control joints or construction joints at the centerlines of all columns and at 15 feet on center maximum in both directions. Provide additional joints such that the resulting aspect ratio does not exceed 1:1.5
3. Tooled, sawcut, or preformed joints shall be 1/4 the depth of the slab. Sawcut joints must be made within 12 hours after the slab has been placed.
4. Metal keyway forms or bulkheads shall be removed prior to placement of adjacent pours.
5. Tool edges of concrete at all construction joints.
6. Refer to "Building Pad Preparation" section for fill requirements.
7. Erection equipment that imposes any concentrated load in excess of 2,000 lbs acting over a 2'-6"x2'-6" area may not be used on the slab-on-grade. Equipment used that will exceed this loading shall be staged away from the building slab and means for doing so shall be included in base bids.

## CONCRETE REINFORCING

1. Reinforcing steel shall be deformed new billet steel bars in accordance with ASTM A615 Grade 60.
2. Detailing of reinforcing steel shall conform to the American Concrete Institute Detailing Manual.
3. All hooks and bends in reinforcing bars shall conform to ACI detailing standards unless shown otherwise.
4. Provide reinforcing bars in accordance with the bar bending diagram if bar types are specified. In unscheduled beams, slabs, columns and walls detail reinforcing as follows:

a. Lap top reinforcing bars at mid span.

b. Lap bottom reinforcing bars at the supports.

c. Lap vertical bars in columns and walls only at floor lines, unless noted otherwise.

d. Refer to lap splice schedule for splice length requirement.

e. Reinforcement labeled as continuous shall be lap spliced 38 bar diameters as a minimum, unless otherwise noted.

f. Provide standard hooks in top bars at cantilever and discontinuous ends of beams, walls and slabs.

g. Provide corner bars for all horizontal bars at the inside and outside faces of intersecting beams or walls. Corner bars are not required if top, bottom, or horizontal bars are hooked.

5. Welding of reinforcing steel will not be permitted.
6. Heat shall not be used in the fabrication or installation of reinforcement.
7. Reinforcing steel clear cover shall be as follows:

| | |
|---|---|
| a. Grade beams, footings - | 1 ½" top, 3" bottom, 2" side (formed), 3" side (placed against earth) |
| b. Drilled piers - | 3" bottom, 3" sides |
| c. Columns - | 1 ½" |
| d. Slabs on grade - | 1" |

8. Submittal: Submit shop drawings for fabrication, bending, and placement of concrete reinforcement. Comply with ACI 315 "Details and Detailing of Concrete Reinforcement". Do not reproduce the Contract Drawings for use as shop drawings.

TEXAS PARKS & WILDLIFE

STATE OF TEXAS
KARINA TRIBBLE
109642
LICENSED
REGISTERED PROFESSIONAL ENGINEER
4/9/21

# SOUTH LLANO RIVER STATE PARK
## HEADQUARTERS BUILDING RENOVATION AND EXPANSION
PROJECT NUMBER: 134245

DATE: 04/09/2021
DESIGNED BY:MN
DRAWN BY:S, EV
REVIEWED BY:KT
REVISED:
REVISED:
REVISED:

100% CONSTRUCTION DOCUMENTS


Architectural Engineers Collaborative
Lamar Central
3800 North Lamar Blvd.
Suite 330
Austin, Tx 78756
P 512.472.2111
www.aecollab.com
FIRM REG.#: F-1985
AEC JOB#: 17012

FORD POWELL &CARSON
Architects & Planners, Inc.
Architecture
Planning
Preservation
Interior Design
711 Navarro, Suite 400
San Antonio, Texas 78205
210/226-1246
92706


SHEET TITLE
GENERAL NOTES

SHEET NUMBER
S100

## EXPANSION ANCHORS

1. Expansion anchors shall only be used where specified on the drawings. The contractor shall obtain approval from the engineer of record prior to using the anchors for missing or misplaced cast-in-place anchors.
2. Unless otherwise noted, size and depth of the expansion anchors specified in the drawings are based on the Hilti Fastening System products - Hilti Kwik Bolt 3 for general applications, and Kwik Bolt TZ for overhead applications.
3. Substitution of expansion anchor products with similar capacities shall be submitted to the engineer of record for approval.
4. Expansion anchors of the size and embedment shown on the Drawings shall be installed in accordance with the Contract Documents, the manufacturer's recommendations, and the manufacturer's current ICBO report for the anchor. If conflicts exist between these referenced documents, the most stringent requirements shall govern.
5. The Contractor shall locate all existing reinforcing steel and other embedded items contained in the concrete using non-destructive methods and shall position anchor locations to avoid conflicts with existing embedded items. Anchor locations can be adjusted by a maximum of 1 1/2" from detailed locations to avoid conflicts, unless noted otherwise.
6. Based on field verified locations of reinforcing steel and embedded items, the Contractor shall create templates for each anchor group. Submit template dimensions for review prior to fabrication of connection plates.
7. Holes for anchors shall be drilled in a continuous operation using the bit type and size recommended by the anchor manufacturer. Holes shall be drilled perpendicular to the concrete surface and shall not be enlarged or redirected at any point along its length. All debris shall be blown out of the holes with compressed air after drilling.
8. All abandoned holes shall be filled with non-shrink grout.
9. Holes in connection plates shall be no more than 1/16" larger than the anchor diameter. If larger holes are required for erection purposes, Contractor shall provide 1/4" x 3" x 3" plate washers sufficiently welded to the connection plate to transfer the specified load.
10. Installation of expansion anchors shall be continuously inspected by the testing agency to ensure that holes are of specified size, and that bolts are properly installed including application of minimum installation torques.

## ADHESIVE ANCHORS

1. Adhesive anchors shall only be used where specified on the drawings. The contractor shall obtain approval from the engineer of record prior to using the anchors for missing or misplaced cast-in-place anchors.
2. Unless otherwise noted, size and depth of the adhesive anchors specified in the drawings are based on HAS rods epoxy doweled with HY 200 Max or RE 500 SD, Hilti Fastening Systems.
3. Substitution of expansion anchor products with similar capacities shall be submitted to the engineer of record for approval.
4. Adhesive anchors of the size and embedment shown on the Drawings shall be installed in accordance with the Contract Documents, the manufacturer's recommendations, and the manufacturer's current ICBO report for the anchor. If conflicts exist between these referenced documents, the most stringent requirements shall govern.
5. The Contractor shall locate all existing reinforcing steel and other embedded items contained in the concrete using non-destructive methods and shall position anchor locations to avoid conflicts with existing embedded items. Anchor locations can be adjusted by a maximum of 1 inch from detailed locations to avoid conflicts, unless noted otherwise.
6. Based on field verified locations of reinforcing steel and embedded items, the Contractor shall create templates for each anchor group. Submit template dimensions for review prior to fabrication of connection plates.
7. Holes for anchors shall be drilled in a continuous operation using the bit type and size recommended by the anchor manufacturer. Holes shall be drilled perpendicular to the concrete surface and shall not be enlarged or redirected at any point along its length. All debris shall be blown out of the holes with compressed air after drilling.
8. All abandoned holes shall be filled with non-shrink grout.
9. Holes in connection plates shall be no more than 1/16" larger than the anchor diameter. If larger holes are required for erection purposes, Contractor shall provide 1/4" x 3" x 3" plate washers sufficiently welded to the connection plate to transfer the specified load.
10. Installation of adhesive anchors shall be continuously inspected by the testing agency to ensure that holes are of specified size, and that bolts are properly installed.

## ADHESIVE DOWELS

1. Adhesive doweling system shall be one of the following products: Hilti "HY 200 MAX", Hilti "RE 500 SD". Install dowels in accordance with the manufacturer's instructions.
2. Clean out holes with compressed air after drilling holes.
3.

| Rebar Size | Hole Diameter | Embedment Depth |
|---|---|---|
| #4 | 5/8" | 4 1/2" |
| #5 | 3/4" | 6" |

4. Prior to drilling holes for dowels, locate existing reinforcing steel with a Pachometer (R-Meter) or by drilling 1/4" diameter pilot holes. Relocate bolt holes as required to avoid existing reinforcement.
5. Abandoned holes shall be completely filled with adhesive dowelling compound.

## STRUCTURAL STEEL

1. Structural Steel shall conform to ASTM A992 or A572, grade 50 except where A36 is noted on plan, except that miscellaneous plates, angles, and channels may be A572, grade 50 or A36. Steel pipe shall conform to ASTM Specification A 501 or ASTM A 53, Type E or S, Grade B. Steel tube shall conform to ASTM Specification A 500, Grade B, $F_y$ 46 ksi or ASTM A1085.
2. Anchor rods shall conform to ASTM F1554 grade 36 ksi.
3. Column base plates shall be grouted with a non-shrink, high strength nonmetallic grout conforming to ASTM C827, and shall have a compressive strength at 28 days of 5000 psi. Pre-grouting of base plates will not be permitted.
4. Studs shall be Nelson studs type 53L (Fu=65 ksi) or acceptable equal. Studs shall be made from cold drawn steel conforming to ASTM A108.
5. Deformed bar anchors shall be Nelson D2L or KSM deformed bar anchors (or acceptable equal) and shall be made from cold drawn wire per STM A490 conforming to ASTM A108 with minimum yield strength of 70 Ksi. Anchors shall be automatically and welded with suitable welding equipment in the shop or in the field. Welding shall be in accordance with the recommendations of Nelson Stud Company or KSM Welding Company.
6. Structural steel detailing, fabrication, and erection shall conform to the AISC "Specification for Steel Buildings" and the AISC "Code of Standard Practice for Steel Buildings and Bridges". Typical connection details are indicated in the drawings. The fabricator shall prepare drawings based on these details. If alternate connection designs are used, the fabricator shall have a registered professional engineer prepare the connection designs. Such connection shall bear the engineer's seal and shall be submitted with shop drawings.
7. Splicing of structural steel members is prohibited without prior approval of the Engineer as to location and type of splice to be made. Any member having splice not shown and detailed on shop drawings will be rejected.
8. All welds denoted as moment connection or full penetration weld shall be ultrasonically or x-ray certified by an independent testing agency.
9. Contractor shall coordinate structural steel fireproofing requirements. All interior structural steel scheduled or indicated to receive spray applied fireproofing shall be delivered to the project site unprimed. Steel exposed to corrosive conditions after installation shall be primed with a protective coating which does not diminish the bond between the spray applied fireproofing, and the steel substrate. Any primer, and/or coating applied to structural steel shall be approved for use in the applicable U.L. Fire Resistance Assembly used on the project. Contractor shall protect any unprimed structural steel from detrimental effects of corrosion, as required, until the steel is enclosed and protected by the new construction.
10. Shop painting: Paint structural steel with one coat of manufacturer's standard red oxide primer applied at a rate to provide a uniform dry film thickness of 2.5 mils.
11. Contractor must fabricate and erect steel in accordance with OSHA Safety requirements, 29 CF part 1926 Safety for Steel Erection, Final Rule.
12. Submittal: Provide drawings showing details for fabrication and shop assembly of members, erection plans, and details. Include details of connections, camber, weld profiles and sizes and spacing. Shop and erection drawings shall not be made using reproductions of the contract drawings.

## STRUCTURAL STEEL CONNECTIONS

1. Welding shall conform to ANSI/AWS D1.1, latest edition.
2. Bolts conform to ASTM A325. Bolts shall be designed using values for bearing type bolts with thread allowed in the shear plane.
3. Structural steel connections not specifically detailed on the Drawings shall be designed and detailed by the Contractor under the direct supervision of a registered engineer licensed in the State of Texas. Sealed calculations for all connections designed by the Contractor shall be submitted for the Architect's files. Connections that meet the requirements and assumptions presented in our schematic connection details and table can be used at the discretion of the Contractor. The Contractor shall take full responsibility in confirming that the connection tables are used within their limitations and assumptions outlined in the details and notes.
4. Beam connections shall be designed and detailed as follows, unless noted otherwise on the Drawings:
   a. Connections shall be AISC type 2 simple framing connections.
   b. In general, shop connections shall be bolted or welded and field connections shall be bolted.
   c. Where indicated, connections shall be designed for the scheduled shear force, the shear force indicated on the Drawings as "V= ", and the horizontal force indicated as "H= ".
   d. If not indicated on the Drawings, connections shall be designed for 55 percent of the total load capacity for the beam span shown in the beam tables in Part 3 of the AISC Manual, fourteenth edition.
   e. The minimum number of rows of bolts shall be 1/6 of the beam depth with any fraction be rounded to the next higher number.
   f. Bolts shall be "snug tight", u.o.n.
   g. Short slotted holes shall be permitted provided washers are installed in accordance with AISC requirements. Washers shall be hardened where A325 bolts are utilized. Long slotted holes are not permitted unless the connection is designed as slip-critical or as specified otherwise.
5. Wind brace and truss connections shall be designed and detailed as follows, unless noted otherwise on the Drawings:
   a. Connections shall be welded.
   b. Connections shall be designed and detailed for the forces shown on the Drawings.
   c. If forces are not indicated on the Drawings, connections shall be designed to develop the full tensile capacity of the members.
6. For connections not specifically addressed by these notes or the Drawings, provide fillet welds at all contact surfaces sufficient to develop the tensile strength of the smaller member at the joint.
7. Moment connections indicated on Drawings as "◀ ▶" shall be welded to develop the full capacity of the member on both sides of supporting member.
8. Roof edges angles shall be continuous and shall be spliced only at supports. Splices shall be butt-welded to develop full capacity of the member.
9. Fillet welds with no size specified shall be 3/16", or minimum size required by AISC, whichever is larger.

## TIMBER FRAMING

1. Unless otherwise noted, all structural framing lumber shall be clearly marked No. 1 Southern Yellow Pine or Douglas Fir-Larch, except that non-load bearing interior walls may be stud grade Southern Yellow Pine, Douglas Fir-Larch, or Spruce-Pine-Fir.
   a. All exposed wood at both the Headquarters building and the Tube Storage building shall be #1 Douglas Fir-Larch unless noted otherwise.
   b. All wood at the Tube Storage building shall be pressure-treated.
2. Studs shall be as shown on plan.
3. All wood headers, beams, and top plates shall be No. 2 Southern Yellow Pine or Douglas Fir-Larch.
4. All load bearing walls shall have solid 2x blocking at 4'-0" o.c. maximum vertically. End nail with 2-16d nails or side toe nail with 2-16d nails.
5. Provide double studs at all wall corners and on each side of all openings, unless noted or detailed otherwise.
6. Floor sheathing: 3/4" APA rated tongue and groove sheathing with an Exposure 1 rating. Floor sheathing shall be glued to the wood support members with a wet use adhesive, in addition to being nailed to the supports with 10d ring shank nails at 6" on center at supported edges and 12" on center at intermediate supports. Stagger joints in sheathing.
7. Roof sheathing: 3/4" APA rated sheathing with an exposure 1 rating. Panels shall be continuous over two or more spans with the long dimension oriented perpendicular to the framing members. Nail with 8d common nails at 6" on center at supported edges and 12" on center at intermediate supports. Stagger joints in sheathing.
8. All corners of wall framing shall be braced by a 4'-0" wide x 1/2" panel of APA rated sheathing with an exposure 1 rating extending from the top plate to the sill plate. Where wall is taller than 8'-0", provide multiple panels as required to extend from sill plate to top plate. Provide 2x blocking as required to support all panel edges. Nail with 8d common nails at 6" on center at supported edges and 12" on center at intermediate supports.
9. Solid 2x blocking or bandboard shall be provided at supports and cantilever ends of all wood joists, and between supports in rows not exceeding 8'-0" apart.
10. All framing members framing into the side of a header shall be attached using metal joist hangers of type "LU" as manufactured by the Simpson Company or equal. The hanger shall be sized and installed in accordance with the manufacturers recommendations for the size of joist supported.
11. Nailing and attachment of all framing members and sheathing shall be as specified in the Uniform Building Code Nailing Schedule (table 25Q) unless noted otherwise in the drawings. Common wire nails or spikes, or galvanized box nails shall be used for all framing unless noted otherwise.
12. Place a single plate at the bottom and a double plate at the top of all stud walls. Exterior sill plates shall be bolted to the foundation with 1/2" anchor bolts with a minimum embedment of 8" spaced at 4'-0" on center. Provide a minimum of two bolts per plate segment. Sill plates in contact with concrete or masonry shall be pressure treated with a preservative.
13. As an alternate, plates may be attached to concrete foundation elements with power actuated fasteners. Provide washers at least 0.08 inches thick, and 1.1 inches square or 1.425 inches in diameter at each fastener. Fasteners shall be 3" long and shall have a minimum shank diameter of 0.145 inches. Provide two fasteners located 6 and 10 inches from the end of each sill plate piece, and then at a maximum spacing of 18 inches on center maximum at exterior walls and at interior party walls. At interior non-load bearing partitions, fasteners may be spaced at 36" on center, maximum. Fasteners shall be Hilti X-DNI 72P8S36 pins or equal. Submit manufacturer's information on fastener to be used prior to start of construction.
14. Provide double joists under all interior partition walls oriented parallel to the joists.
15. All bolts and lag screws shall have standard washers. All anchor and expansion bolts used in wood to concrete connections in crawlspace areas shall be hot dip galvanized or stainless steel.
16. Refer to the architectural drawings for additional wood framing members. Provide additional wood framing members shown on the architectural drawings even though they may not be shown on the structural drawings.

## PREFABRICATED METAL PLATE CONNECTED WOOD TRUSSES

1. Trusses shall be designed by the Contractor in accordance with the Truss Plate Institute "National Design Standard for Metal Plate Connected Wood Truss Construction" (ANSI/TPI 1-02).
2. Truss members shall be clamped in a mechanical or hydraulic jig with sufficient pressure to bring members into reasonable contact at all joints during application of connector plates.
3. Provide adequate erection bracing in accordance with Truss Plate Institute publication HIB-91.
4. Truss Manufacturer shall provide permanent bracing as required by the design of the trusses. Erection bracing may remain in place as permanent bracing where it does not interfere with the architectural finishes.
5. All timber truss members shall be Southern Yellow Pine with a maximum moisture content of 19%. Chord members shall be No. 2 or better and web members shall be No. 3 or better.
6. Connection plates shall be manufactured by a WTCA member plate manufacturer. Plates shall be 20 gauge minimum, ASTM A653 grade 33 steel, with a G60 galvanized coating.
7. Trusses shall be designed in accordance with the following requirements:
   a. Top chords shall be designed to resist the local bending induced by the floor or roof uniform load on the top chord.
   b. Limit live load deflection of roof trusses to L/360. Total load deflections shall be limited to L/240.
   c. Truss members and connections shall be proportioned with a maximum Load Duration Factor as follows:

| | |
|---|---|
| Dead Load | 0.9 |
| Occupancy Live Load | 1.0 |
| Snow Load | 1.15 |
| Construction Load | 1.25 |
| Wind/Seismic Load | 1.6 |

   d. Trusses shall be designed for the superimposed dead and live loads as noted in the Structural Notes and as indicated on the drawings. Dead loads shall not be less than the following:

      Roof 20 psf

   e. Trusses shall be designed for the superimposed wind loads in accordance with the specified building code and the specified basic wind speed, exposure, and importance factor. Increase member sizes or provide additional bridging as required to resist uplift forces.
8. Connect roof trusses to bearing wall or beam support at each end with a type H2.5, H2.5A, or H2.5T framing tie as manufactured by the Simpson Company or approved equal, u.o.n.
9. Refer to mechanical drawings for size and location of mechanical openings.
10. Submittal: Provide shop drawings and calculations prepared and signed by a professional engineer licensed in the state of Texas. Submittal package shall include each individual truss design drawing with design loads, the truss placement diagram for the project, the truss member permanent bracing specification. Refer to IBC section 2303.4.1 for additional requirements.

## COMPOSITE WOOD MEMBERS

1. Where noted on the drawings, joists shall be TJI series engineered wood joists, and beams shall be "Microllam LVL (E=1,900ksi)" or "Parallam PSL (E=2000ksi)" beams as manufactured by the Trus Joist Weyerhaeuser Corporation.
2. Do not notch joists or beams. Drill holes through webs of engineered wood members for mechanical, electrical or plumbing services in accordance with the recommendations of the engineered wood product manufacturer.
3. Multiple wood beams up to three members thick shall be nailed together with three rows of 16d nails at 12" on center. Four or more multiple wood beams and any multiple wood beams utilizing beams thicker than 1 ¾" shall be bolted together with ½" diameter bolts top and bottom at supports and ends of the beam, then at 24" on center, staggered top and bottom for the full length of the beam.
4. Where multiples of two 1 ¾" Microllam LVL beams are noted on the drawings, contractor may provide single 3 ½" beams in lieu of double 1 ¾" beams.
5. Provide web stiffeners where required by the manufacturer for the specified support condition.
6. Connectors for double 1 ¾" beams or single 3 ½" beams shall be Simpson "HHUS410" face mounted hangers, typical, u.n.o

## TONGUE AND GROOVE DECKING

1. Tongue and groove decking shall be 1x6 inches nominal solid sawn lumber. Wood shall be No. 2 or better Douglas Fir-Larch.
2. Pattern shall be standard vee grooved. Finish shall be smooth surface.
3. Lay-up shall be random length continuous. The distance between end joints in adjacent rows shall be at least 2'-0". The distance between end joints of decking separated by only one course shall be at least 1'-0". One third of the courses in end spans shall not have end joints.
4. Nailing Schedule:

| | Face Nailing to Supports |
|---|---|
| 1" Nominal | 2-12d |

   Toenailing or "slant" nailing shall be started approximately 12" from the end of each piece. Nails shall be ring shank nails. Pre-drill holes for 30d and larger nails.

## STRUCTURAL ABBREVIATIONS

| | |
|---|---|
| ADDITIONAL | ADD'L. |
| ADJACENT | ADJ. |
| AGGREGATE | AGGR. |
| ALTERNATE | ALT. |
| ANCHOR ROD | A.R. |
| ARCHITECT(URAL) | ARCH('L). |
| AIR CONDITIONER | A/C |
| AIR HANDLING UNIT | AHU |
| APPROXIMATE(LY) | APPORX. |
| AXIAL LOAD | P |
| BACK FACE | B.F. |
| BEAM | BM. |
| BEARING | BRG. |
| BETWEEN | BTWN. |
| BLOCKING | BLKG. |
| BLOCK-OUT | B.O. |
| BOTTOM | BOT. |
| BOTTOM OF STEEL | B.O.S. |
| BRICK LEDGE | BR.L. |
| BRIDGING | BRDG. |
| BUILDING | BLDG. |
| BUILDING LINE | B.L. |
| CAST-IN-PLACE | C.I.P. |
| CENTER LINE | C.L. OR ℄ |
| CENTER LINE OF STEEL | C.L.S. |
| CENTER OF GRAVITY | C.G. |
| CLEAR(ANCE) | CLR. |
| COLUMN | COL. |
| COMPRESSION | C OR COMP. |
| CONCRETE | CONC. |
| CONCRETE MASONRY UNIT | C.M.U. |
| CONNECTIONS | CONX(S). |
| CONTINUOUS | CONT. |
| CONTRACTOR | CONTR. |
| CONTROL JOINT | CT.J. |
| CONSTRUCTION | CONST. |
| CONSTRUCTION JOINT | CJ. |
| COVER PLATE | COV. PL. |
| DEFORMED BAR ANCHOR(S) | DBA('S). |
| DETAIL | DET. |
| DEAD LOAD | D.L. |
| DIAGONAL | DIAG. |
| DIAMETER | DIA. |
| DIMENSION(S) | DIM(S). |
| DRAWING(S) | DWG(S). |
| DOUBLE | DBL. |
| DOUBLE EXTRA STRONG | XXS |
| DOWEL(S) | DWL(S). |
| EACH | EA. |
| EACH FACE | E.F. |
| EACH WAY | E.W. |
| ELECTRICAL | ELEC. |
| ELEVATION | EL. |
| ELEVATOR | ELEV. |
| EMBEDMENT | EMBED. |
| ENGINEER | ENGR. |
| EQUAL | EQ. |
| EQUIPMENT | EQUIP. |
| EXPANSION | EXP. |
| EXPANSION JOINT | E.J. |
| EXISTING | EXIST. |
| EXTERIOR | EXT. |
| EXTRA STRONG | XS |
| FACE TO FACE | F. TO F. |
| FABRICATE(ION)(OR) | FAB. |
| FAR SIDE | F.S. |
| FINISH(ED) | FIN(D') |
| FINISHED FLOOR | F.F. |
| FIREPROOF | F.P. |
| FLANGE | FLG. |
| FLOOR | FL. |
| FLOOR DRAIN | F.D. |
| FOOTING | FTG. |
| FOUNDATION | FDN. |
| GALVANIZED | GALV. |
| GENERAL | GEN. |
| GLUE LAMINATED TIMBER | GLULAM |
| GRADE | GR. |
| GRADE BEAM | GR.BM. |
| HOT DIP(PED) | H.D. |
| HEADED STUD(S) | H.S. |
| HEADER | HDR. |
| HEIGHT | HT. |
| HORIZONTAL | HORIZ. |
| HOOK | HK. |
| INSIDE DIAMETER | I.D. |
| INSIDE FACE | I.F. |
| INTERIOR | INT. |
| INTERMEDIATE | INTERM. |
| JOINT | JT. |
| JOIST(S) | JST(S). |
| LAMINATED VENEER LUMBER | LVL |
| LIGHTWEIGHT | LWT. |
| LIVE LOAD | L.L. |
| LONGITUDINAL | LONG. |
| LONG LEG HORIZONTAL | LLH. |
| LONG LEG VERTICAL | LLV. |
| LONG SIDE HORIZONTAL | LSH. |
| LONG SIDE VERTICAL | LSV. |
| MANUFACTURE(R) | MFR. |
| MASONRY | MAS. |
| MATERIAL | MAT'L. |
| MECHANICAL | MECH('L). |
| METAL | MTL. |
| MEZZANINE | MEZZ. |
| MIDDLE | MID. |
| MISCELLANEOUS | MISC. |
| MOMENT | M. |
| MOMENT CONNECTION(S) | M.C. |
| NEAR FACE | N.F. |
| NOMINAL | NOM. |
| NON-SHRINK | N.S. |
| NORMAL WEIGHT | N.W. |
| NOT IN CONTRACT | N.I.C. |
| NOT TO SCALE | N.T.S. |
| ON CENTER | O.C. |
| OPENING(S) | OPNG(S). |
| OPPOSITE | OPP. |
| OPPOSITE HAND | O.H. |
| ORIENTED STRAND BOARD | OSB |
| OUTSIDE FACE | O.F. |
| OUTSIDE DIAMETER | O.D. |
| PARALLEL | PAR. |
| PARALLEL STRAND LUMBER | PSL |
| PENETRATION | PEN. |
| PERPENDICULAR | PERP. |
| PIECE | PC. |
| PLATE | PL. OR ℗ |
| PLYWOOD | PLYWD. |
| POINT | PT. |
| POST-TENSION(ED) | P.T. |
| POUND(S) X1000 | KIP(S) |
| POUNDS PER LINEAR FOOT | PLF |
| POUNDS PER SQUARE FOOT | PSF |
| POUNDS PER CUBIC FOOT | PCF |
| POUNDS PER CUBIC YARD | PCY |
| PRECAST CONCRETE | P/C |
| PREFABRICATED | PREFAB. |
| PRELIMINARY | PRELIM. |
| PRESSURE | PRESS. |
| PROJECT(ION) | PROJ. |
| RADIUS | R. |
| REFER TO / REFERENCE | REF. |
| REINFORCED CONCRETE PIPE | RCP. |
| REINFORCE(ING)(ED)(MENT) | REINF. |
| REMAINDER | REM. |
| REQUIRE | REQ. |
| REQUIRED | REQ'D |
| RETURN | RET. |
| ROOF DRAIN | R.D. |
| ROUGH OPENING | R.O. |
| ROUND | RND. |
| SCHEDULE(D) | SCHED. |
| SECTION | SECT. |
| SHEAR FORCE | V |
| SHEET | SHT. |
| SIMILAR | SIM. |
| SPACE(S)(ING) | SPA. |
| SPECIFICATION(S) | SPEC(S). |
| SPECIFIED | SPEC'D |
| SQUARE | SQ. |
| STAINLESS STEEL | S.S. |
| STANDARD | STD. |
| STEEL | STL. |
| STIFFENER | STIFF |
| STRAIGHT | STR. |
| STIRRUPS | STIR |
| STRUCTURE OR STRUCTURAL | STRUCT. |
| SUPPORT(S) | SUPT(S) |
| TENSION | T |
| THICK(NESS) | THK. |
| TONGUE AND GROOVE | T&G |
| TOP AND BOTTOM | T&B |
| TOP OF BEAM | T.O.BM. |
| TOP OF FOOTING | T.O.FTG. |
| TOP OF PIER | T.O.PIER |
| TOP OF PIER CAP | T.O.P.C. |
| TOP OF STEEL | T.O.S. |
| TOP OF STRUCTURAL CONCRETE | T.O.S.C. |
| TOP OF WALL | T.O.W. |
| TREATED | TRTD. |
| TYPICAL | TYP. |
| UNLESS OTHERWISE NOTED | U.O.N. |
| VERTICAL | VERT. |
| VOLUME | VOL. |
| WATER STOP | W.S. |
| WELDED WIRE MESH | W.W.M. |
| WIND BRACE | WB |
| WIND LOAD | W.L. |
| WITH | W/ |
| WITHOUT | W/O |
| WATER PROOFING | W.P. |
| WORK POINT | W.P. |
| WOOD | WD. |


Architectural Engineers Collaborative
Lamar Central
3800 North Lamar Blvd.
Suite 330
Austin, Tx 78756
P 512.472.2111
www.aecollab.com
FIRM REG.#: F-1985
AEC JOB#: 17012

FORD POWELL &CARSON
Architects & Planners, Inc.
Architecture Planning Preservation Interior Design
711 Navarro, Suite 400
San Antonio, Texas 78205
210/226-1246
92706


TEXAS PARKS & WILDLIFE

STATE OF TEXAS
KARINA TRIBBLE
109642
LICENSED
REGISTERED PROFESSIONAL ENGINEER
4/9/21

# SOUTH LLANO RIVER STATE PARK
## HEADQUARTERS BUILDING RENOVATION AND EXPANSION
PROJECT NUMBER: 134245

DATE: 04/09/2021
DESIGNED BY:MN
DRAWN BY:S. EV
REVIEWED BY:KT
REVISED:
REVISED:
REVISED:

100% CONSTRUCTION DOCUMENTS

SHEET TITLE
GENERAL NOTES

SHEET NUMBER
S101

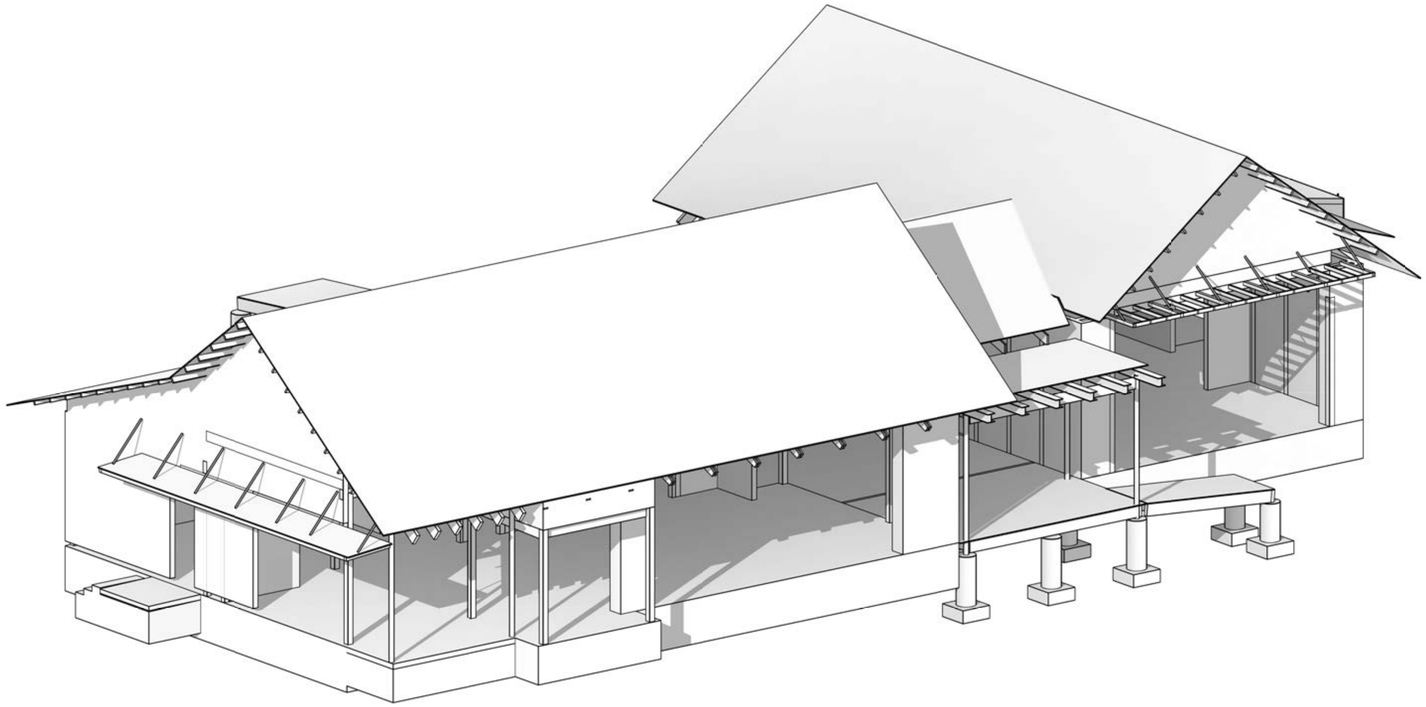

1 SOUTHWEST CORNER VIEW
NO SCALE

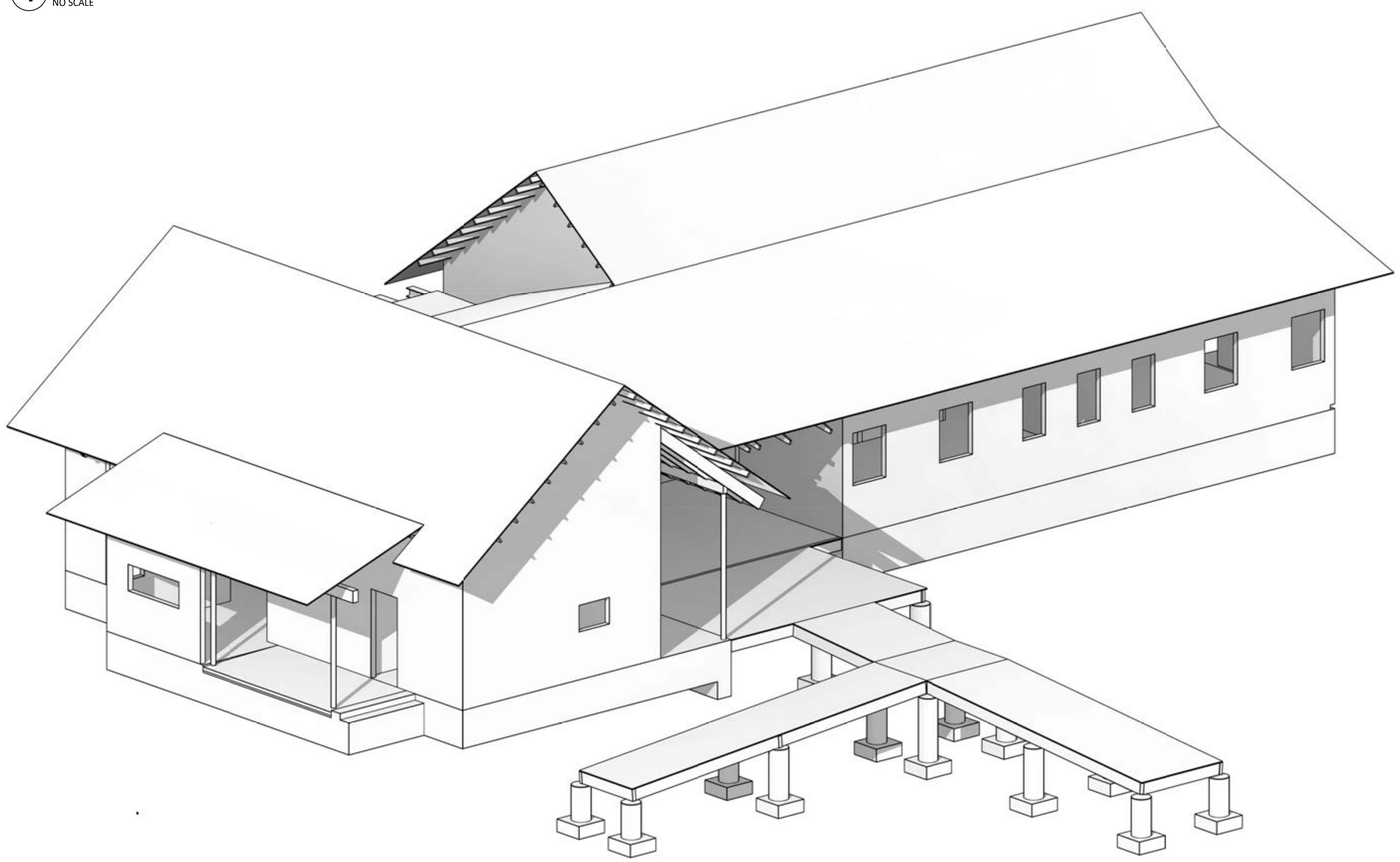

2 NORTHEAST CORNER VIEW
NO SCALE

TEXAS PARKS & WILDLIFE

STATE OF TEXAS
KARINA TRIBBLE
109642
LICENSED
PROFESSIONAL ENGINEER
4/9/21

# SOUTH LLANO RIVER STATE PARK
## HEADQUARTERS BUILDING RENOVATION AND EXPANSION
PROJECT NUMBER: 134245

DATE: 04/09/2021
DESIGNED BY:MN
DRAWN BY:S, EV
REVIEWED BY:KT
REVISED:
REVISED:
REVISED:

100% CONSTRUCTION DOCUMENTS


Architectural Engineers Collaborative
Lamar Central
3800 North Lamar Blvd.
Suite 330
Austin, Tx 78756
P 512.472.2111
www.aecollab.com
FIRM REG.#: F-1985
AEC JOB#: 17012

FORD POWELL & CARSON
Architects & Planners, Inc.
Architecture
Planning
Preservation
Interior Design
711 Navarro, Suite 400
San Antonio, Texas 78205
210/226-1246
92706


SHEET TITLE
3D VIEWS

SHEET NUMBER
S102

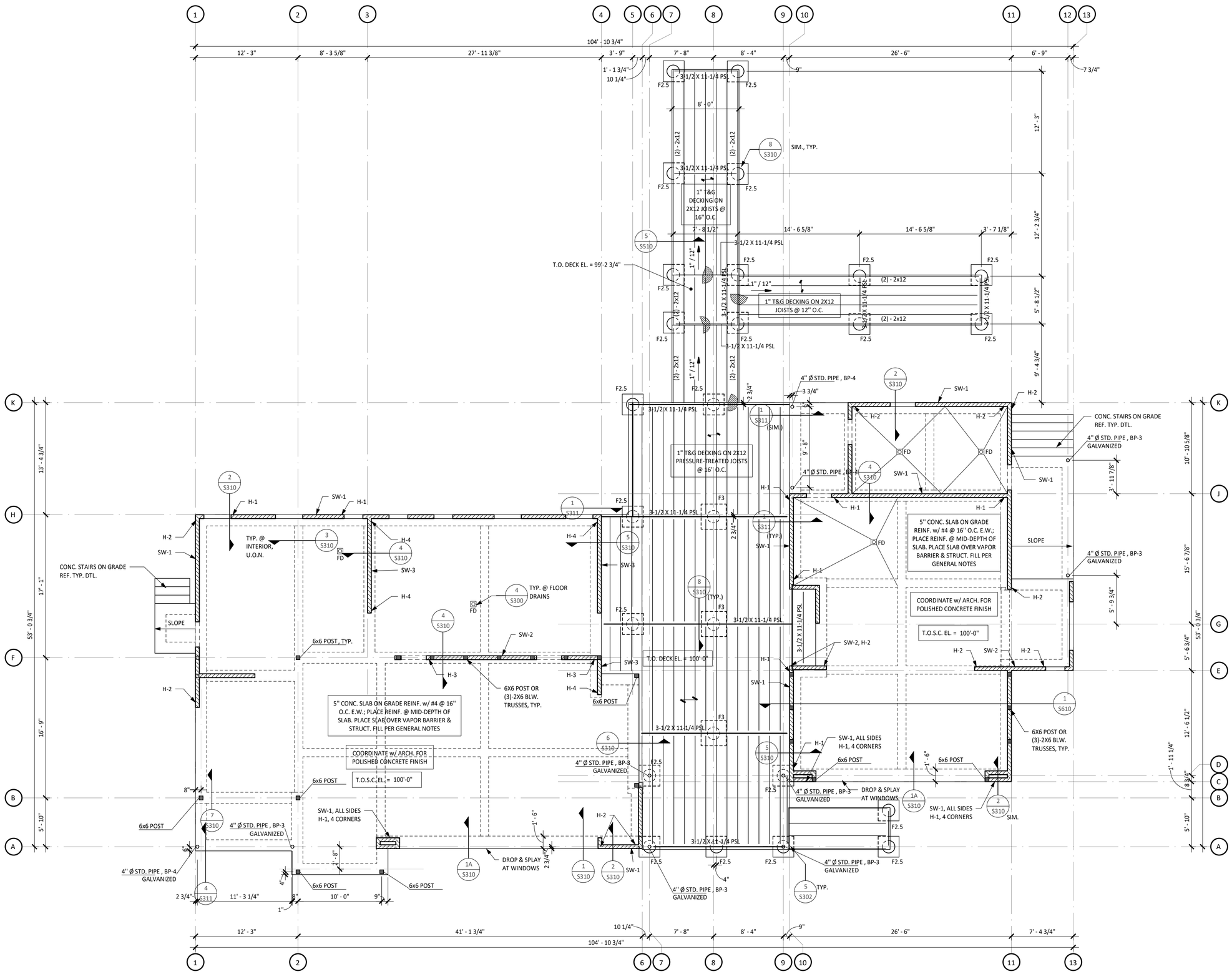


1 FOUNDATION AND GROUND FLOOR FRAMING PLAN

SCALE: 3/16" = 1'-0"

FOUNDATION PLAN NOTES:

1. TOP OF STRUCTURAL CONCRETE ELEVATION IS DENOTED AS FOLLOWS UNLESS OTHERWISE NOTED:

   T.O.S.C. EL.=XXX'-XX" (AREA ELEVATION) — T.O.S.C. EL.=XXX'-XX" (SPOT ELEVATION)

2. FOR FINISH FLOOR ELEVATIONS (F.F. EL.), REFER TO ARCHITECTURAL DRAWINGS. ELEVATIONS NOTED ON PLAN ARE FOR REFERENCE ONLY. REFER TO AND VERIFY ALL DIMENSIONS AND ELEVATIONS w/ ARCHITECTURAL DRAWINGS
3. REFER TO THE ARCHITECTURAL DRAWINGS FOR EXACT LOCATIONS OF FLOOR RECESSES, DROPS AND SLOPES NOT DIMENSIONED ON PLAN
4. REFER TO MECHANICAL, ELECTRICAL, AND PLUMBING DRAWINGS FOR LOCATIONS AND DIMENSIONS OF PENETRATIONS NOT SHOWN OR DIMENSIONED ON PLAN
5. REFER TO S500 FOR BASEPLATE SCHEDULE AND DETAILS
6. COLUMNS AND FOOTINGS ARE NOTED ON PLAN AS FOLLOWS:

   COLUMN MARK, BASE PLATE MARK / FTG. MARK, T.O. FTG. EL.

7. REFER TO 5/S302 FOR TYPICAL FOOTING ELEVATION.

PLAN LEGEND:

- INDICATES STRUCTURAL CONCRETE SLAB STEP
- INDICATES STRUCTURAL CONCRETE SLOPE CHANGE
- INDICATES STRUCTURAL CONCRETE STEP AND SLOPE CHANGE
- INDICATES STRUCTURAL CONCRETE SLOPE EXTENTS
- INDICATES STRUCTURAL DECK OR SLAB SPAN
- INDICATES WOOD TRUSS @ 24" O.C. DESIGNED BY OTHERS. PROVIDE 2x12 SCABS AT ALTERNATING OVERHANGS AT EXTERIOR, REF. 4/S610
- INDICATES 2X6 PURLINS @ 24" O.C. ABOVE TRUSSES
- INDICATES LOAD BEARING WOOD WALL. REFER TO GENERAL NOTES AND SHEAR WALL SCHEDULE FOR SHEATHING REQUIREMENTS, IF ANY. STUDS TO BE 2x6 @ 16" O.C. MAX., U.O.N.
- SW-X — INDICATES WOOD SHEAR WALL w/ SHEATHED SIDE INDICATED BY SIDE w/ TAG; REF. 2/S602 FOR SHEAR WALL SCHEDULE
- H-X — INDICATES WOOD SHEAR WALL HOLLDOWN LOCATION AND TYPE; REF. 1/S602 FOR HOLDDOWN SCHEDULE
- WB-X — INDICATES LATERAL WIND BRACE


Architectural Engineers Collaborative
Lamar Central
3800 North Lamar Blvd.
Suite 330
Austin, Tx 78756
P 512.472.2111
www.aecollab.com
FIRM REG.#: F-1985
AEC JOB#: 17012

FORD POWELL &CARSON
Architects & Planners, Inc.
Architecture
Planning
Preservation
Interior Design
711 Navarro, Suite 400
San Antonio, Texas 78205
210/226-1246
92706


TEXAS PARKS & WILDLIFE

STATE OF TEXAS — KARINA TRIBBLE — 109642 — LICENSED — PROFESSIONAL ENGINEER
4/9/21

# SOUTH LLANO RIVER STATE PARK
## HEADQUARTERS BUILDING RENOVATION AND EXPANSION
PROJECT NUMBER: 134245

DATE: 04/09/2021
DESIGNED BY:MN
DRAWN BY:JS, EV
REVIEWED BY:KT
REVISED:
REVISED:
REVISED:

100% CONSTRUCTION DOCUMENTS

SHEET TITLE
FOUNDATION PLAN

SHEET NUMBER
S201

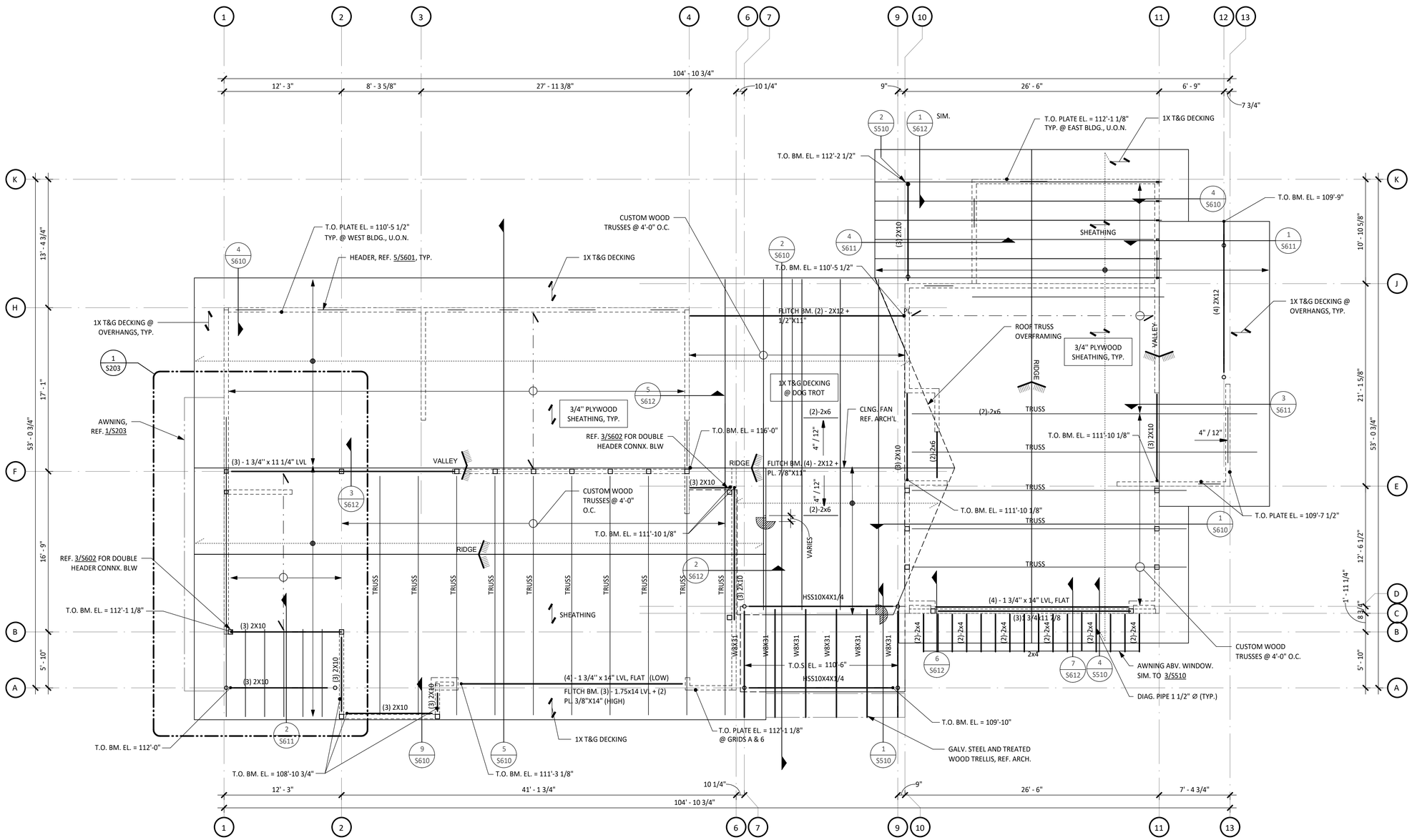


## 1 ROOF FRAMING PLAN

SCALE: 3/16" = 1'-0"

ROOF PLAN NOTES:

1. TOP OF STRUCTURAL STEEL ELEVATION (BOTTOM OF DECK) IS DENOTED AS FOLLOWS UNLESS OTHERWISE NOTED:

   T.O.S. EL.=XXX'-XX" (AREA ELEVATION) — T.O.S. EL.=XXX'-XX" (SPOT ELEVATION)

2. FOR FINISH FLOOR ELEVATIONS (F.F. EL.), REFER TO ARCHITECTURAL DRAWINGS. ELEVATIONS NOTED ON PLAN ARE FOR REFERENCE ONLY. REFER TO AND VERIFY ALL DIMENSIONS AND ELEVATIONS w/ ARCHITECTURAL DRAWINGS
3. REFER TO THE ARCHITECTURAL DRAWINGS FOR EXACT LOCATIONS OF ROOF SLOPES NOT DIMENSIONED ON PLAN
4. REFER TO MECHANICAL, ELECTRICAL, AND PLUMBING DRAWINGS FOR LOCATIONS AND DIMENSIONS OF ROOF PENETRATIONS NOT SHOWN OR DIMENSIONED ON PLAN
5. STEEL BEAMS ARE NOTED ON PLAN AS FOLLOWS:

   BEAM MARK — W14x22

PLAN LEGEND:

- INDICATES STRUCTURAL CONCRETE SLAB STEP
- INDICATES STRUCTURAL CONCRETE SLOPE CHANGE
- INDICATES STRUCTURAL CONCRETE STEP AND SLOPE CHANGE
- INDICATES STRUCTURAL CONCRETE SLOPE EXTENTS
- INDICATES STRUCTURAL DECK OR SLAB SPAN
- INDICATES WOOD TRUSS @ 24" O.C. DESIGNED BY OTHERS. PROVIDE 2x12 SCABS AT ALTERNATING OVERHANGS AT EXTERIOR, REF. 4/S610
- INDICATES 2X6 PURLINS @ 24" O.C. ABOVE TRUSSES
- INDICATES LOAD BEARING WOOD WALL. REFER TO GENERAL NOTES AND SHEAR WALL SCHEDULE FOR SHEATHING REQUIREMENTS, IF ANY. STUDS TO BE 2x6 @ 16" O.C. MAX., U.O.N.
- SW-X — INDICATES WOOD SHEAR WALL w/ SHEATHED SIDE INDICATED BY SIDE w/ TAG; REF. 2/S602 FOR SHEAR WALL SCHEDULE
- H-X — INDICATES WOOD SHEAR WALL HOLDDOWN LOCATION AND TYPE; REF. 1/S602 FOR HOLDDOWN SCHEDULE
- WB-X — INDICATES LATERAL WIND BRACE

TEXAS PARKS & WILDLIFE

STATE OF TEXAS — KARINA TRIBBLE 109642 — LICENSED — PROFESSIONAL ENGINEER — 4/9/21

# SOUTH LLANO RIVER STATE PARK
## HEADQUARTERS BUILDING RENOVATION AND EXPANSION
PROJECT NUMBER: 134245

DATE: 04/09/2021
DESIGNED BY:MN
DRAWN BY:S, EV
REVIEWED BY:KT
REVISED:
REVISED:
REVISED:

100% CONSTRUCTION DOCUMENTS


Architectural Engineers Collaborative
Lamar Central — Austin, Tx 78756
3800 North Lamar Blvd. — P 512.472.2111
Suite 330 — www.aecollab.com
FIRM REG.#: F-1985
AEC JOB#: 17012

FORD POWELL &CARSON Architects & Planners, Inc.
Architecture Planning Preservation Interior Design
711 Navarro, Suite 400
San Antonio, Texas 78205
210/226-1246
92706


SHEET TITLE: ROOF FRAMING PLAN

SHEET NUMBER: S202

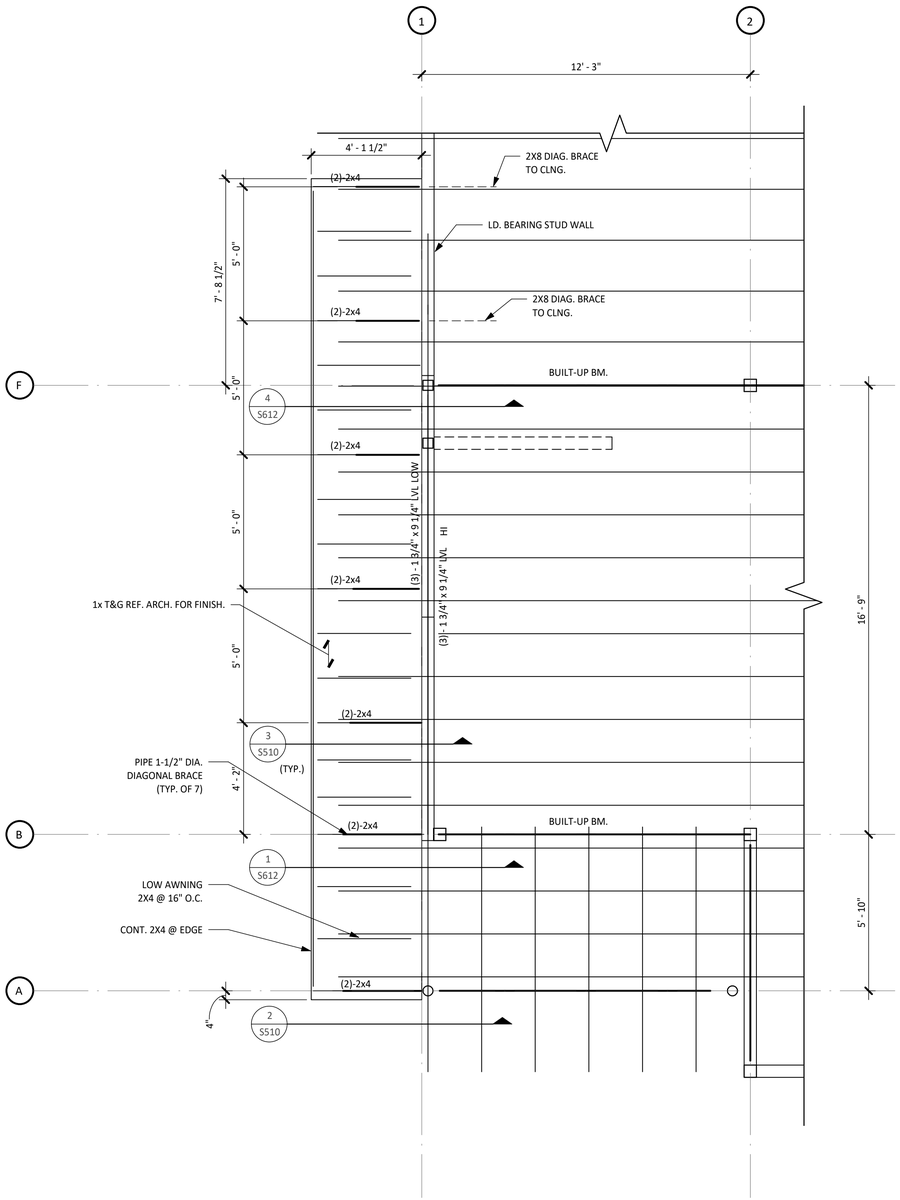


1 ENLARGED AWNING FRAMING PLAN
SCALE: 3/8" = 1'-0"

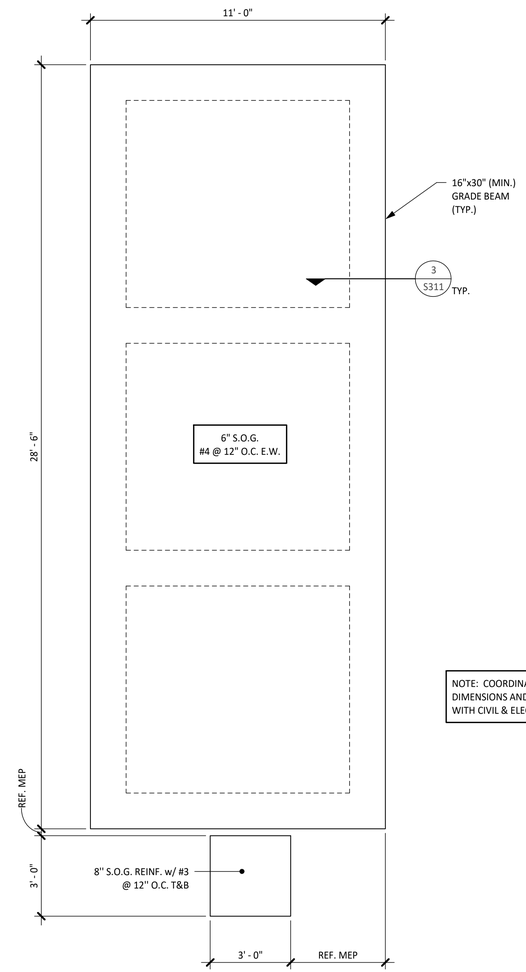


NOTE: COORDINATE FINAL DIMENSIONS AND LOCATONS WITH CIVIL & ELECTRICAL

2 FOUNDATION PLAN @ MAINTENANCE YARD EQUIPMENT
SCALE: 3/8" = 1'-0"

FOUNDATION PLAN NOTES:

1. TOP OF STRUCTURAL CONCRETE ELEVATION IS DENOTED AS FOLLOWS UNLESS OTHERWISE NOTED:
   T.O.S.C. EL.=XXX'-XX" (AREA ELEVATION) — T.O.S.C. EL.=XXX'-XX" (SPOT ELEVATION)
2. FOR FINISH FLOOR ELEVATIONS (F.F. EL.), REFER TO ARCHITECTURAL DRAWINGS. ELEVATIONS NOTED ON PLAN ARE FOR REFERENCE ONLY. REFER TO AND VERIFY ALL DIMENSIONS AND ELEVATIONS w/ ARCHITECTURAL DRAWINGS
3. REFER TO THE ARCHITECTURAL DRAWINGS FOR EXACT LOCATIONS OF FLOOR RECESSES, DROPS AND SLOPES NOT DIMENSIONED ON PLAN
4. REFER TO MECHANICAL, ELECTRICAL, AND PLUMBING DRAWINGS FOR LOCATIONS AND DIMENSIONS OF PENETRATIONS NOT SHOWN OR DIMENSIONED ON PLAN
5. REFER TO S500 FOR BASEPLATE SCHEDULE AND DETAILS
6. COLUMNS AND FOOTINGS ARE NOTED ON PLAN AS FOLLOWS:
   COLUMN MARK, BASE PLATE MARK
   FTG. MARK, T.O. FTG. EL.
7. REFER TO 5/S302 FOR TYPICAL FOOTING ELEVATION.

PLAN LEGEND:

- INDICATES STRUCTURAL CONCRETE SLAB STEP
- INDICATES STRUCTURAL CONCRETE SLOPE CHANGE
- INDICATES STRUCTURAL CONCRETE STEP AND SLOPE CHANGE
- INDICATES STRUCTURAL CONCRETE SLOPE EXTENTS
- INDICATES STRUCTURAL DECK OR SLAB SPAN
- INDICATES WOOD TRUSS @ 24" O.C. DESIGNED BY OTHERS. PROVIDE 2x12 SCABS AT ALTERNATING OVERHANGS AT EXTERIOR, REF. 4/S610
- INDICATES 2X6 PURLINS @ 24" O.C. ABOVE TRUSSES
- INDICATES LOAD BEARING WOOD WALL. REFER TO GENERAL NOTES AND SHEAR WALL SCHEDULE FOR SHEATHING REQUIREMENTS, IF ANY. STUDS TO BE 2x6 @ 16" O.C. MAX., U.O.N.
- SW-X — INDICATES WOOD SHEAR WALL w/ SHEATHED SIDE INDICATED BY SIDE w/ TAG; REF. 2/S602 FOR SHEAR WALL SCHEDULE
- H-X — INDICATES WOOD SHEAR WALL HOLDDOWN LOCATION AND TYPE; REF. 1/S602 FOR HOLDDOWN SCHEDULE
- WB-X — INDICATES LATERAL WIND BRACE


Architectural Engineers Collaborative
Lamar Central
3800 North Lamar Blvd.
Suite 330
Austin, Tx 78756
P 512.472.2111
www.aecollab.com
FIRM REG.#: F-1985
AEC JOB#: 17012

FORD POWELL &CARSON
Architects & Planners, Inc.
Architecture
Planning
Preservation
Interior Design
711 Navarro, Suite 400
San Antonio, Texas 78205
210/226-1246
92706


TEXAS PARKS & WILDLIFE

STATE OF TEXAS
KARINA TRIBBLE
109642
LICENSED
PROFESSIONAL ENGINEER
4/9/21

# SOUTH LLANO RIVER STATE PARK
## HEADQUARTERS BUILDING RENOVATION AND EXPANSION
PROJECT NUMBER: 134245

DATE: 04/09/2021
DESIGNED BY: MN
DRAWN BY: S., EV
REVIEWED BY: KT
REVISED:
REVISED:
REVISED:

SHEET TITLE
AWNING FRAMING AND PUMP STATION FOUNDATION PLAN

SHEET NUMBER
S203

100% CONSTRUCTION DOCUMENTS

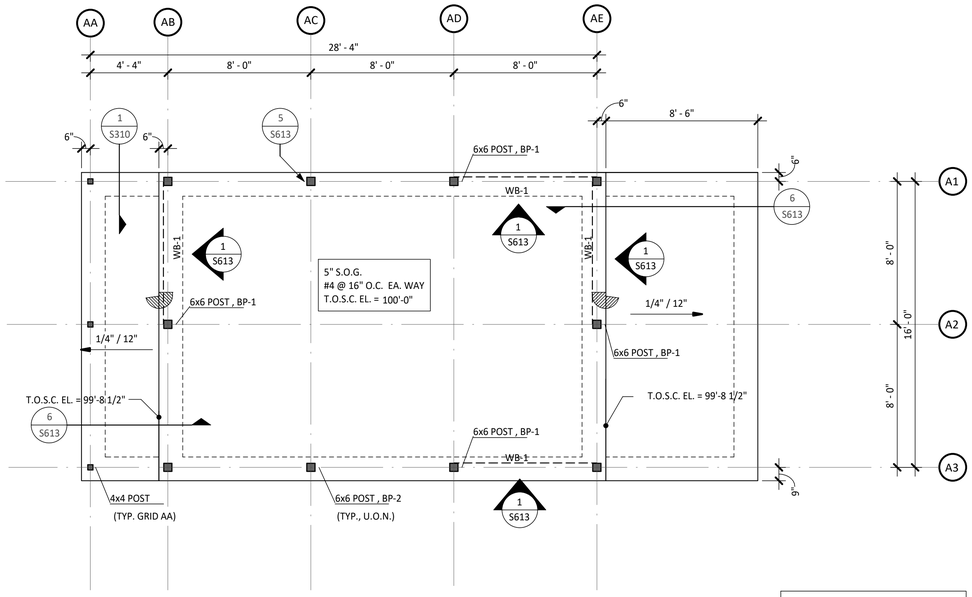


NOTES:
1. ALL WOOD TO BE PRESSURE-TREATED
2. ALL STEEL TO BE GALVANIZED.

1 TUBE STORAGE BUILDING FOUNDATION PLAN
SCALE: 1/4" = 1'-0"

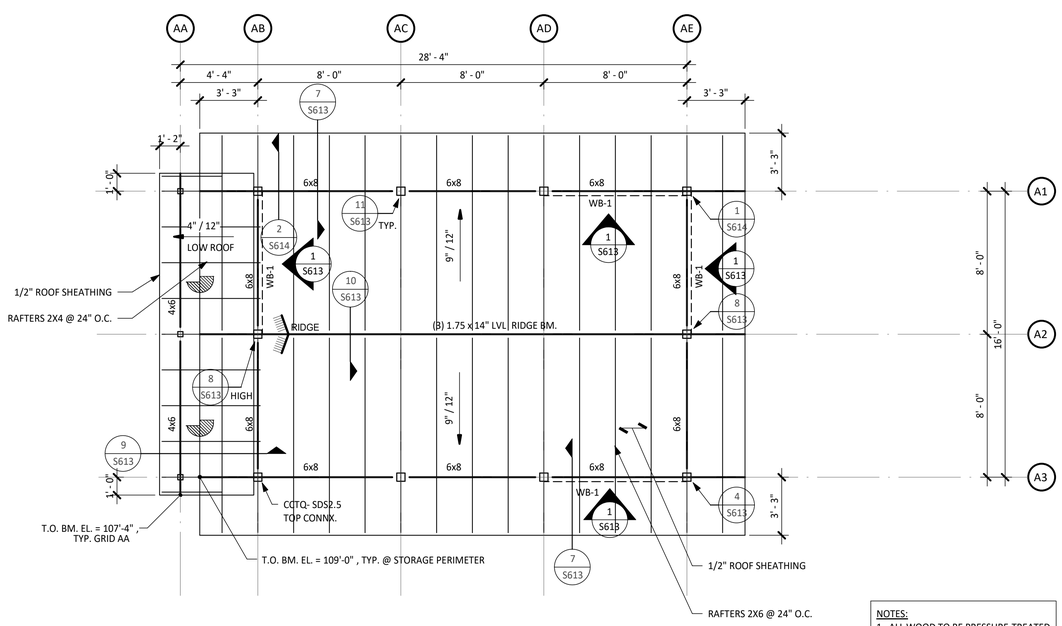


NOTES:
1. ALL WOOD TO BE PRESSURE-TREATED
2. ALL STEEL TO BE GALVANIZED.

2 TUBE STORAGE BUILDING ROOF FRAMING PLAN
SCALE: 1/4" = 1'-0"

ROOF PLAN NOTES:

1. TOP OF STRUCTURAL STEEL ELEVATION (BOTTOM OF DECK) IS DENOTED AS FOLLOWS UNLESS OTHERWISE NOTED:

   T.O.S. EL.=XXX'-XX" (AREA ELEVATION) — T.O.S. EL.=XXX'-XX" (SPOT ELEVATION)

2. FOR FINISH FLOOR ELEVATIONS (F.F. EL.), REFER TO ARCHITECTURAL DRAWINGS. ELEVATIONS NOTED ON PLAN ARE FOR REFERENCE ONLY. REFER TO AND VERIFY ALL DIMENSIONS AND ELEVATIONS w/ ARCHITECTURAL DRAWINGS
3. REFER TO THE ARCHITECTURAL DRAWINGS FOR EXACT LOCATIONS OF ROOF SLOPES NOT DIMENSIONED ON PLAN
4. REFER TO MECHANICAL, ELECTRICAL, AND PLUMBING DRAWINGS FOR LOCATIONS AND DIMENSIONS OF ROOF PENETRATIONS NOT SHOWN OR DIMENSIONED ON PLAN
5. STEEL BEAMS ARE NOTED ON PLAN AS FOLLOWS:

   BEAM MARK
   W14x22

FOUNDATION PLAN NOTES:

1. TOP OF STRUCTURAL CONCRETE ELEVATION IS DENOTED AS FOLLOWS UNLESS OTHERWISE NOTED:

   T.O.S.C. EL.=XXX'-XX" (AREA ELEVATION) — T.O.S.C. EL.=XXX'-XX" (SPOT ELEVATION)

2. FOR FINISH FLOOR ELEVATIONS (F.F. EL.), REFER TO ARCHITECTURAL DRAWINGS. ELEVATIONS NOTED ON PLAN ARE FOR REFERENCE ONLY. REFER TO AND VERIFY ALL DIMENSIONS AND ELEVATIONS w/ ARCHITECTURAL DRAWINGS
3. REFER TO THE ARCHITECTURAL DRAWINGS FOR EXACT LOCATIONS OF FLOOR RECESSES, DROPS AND SLOPES NOT DIMENSIONED ON PLAN
4. REFER TO MECHANICAL, ELECTRICAL, AND PLUMBING DRAWINGS FOR LOCATIONS AND DIMENSIONS OF PENETRATIONS NOT SHOWN OR DIMENSIONED ON PLAN
5. REFER TO S500 FOR BASEPLATE SCHEDULE AND DETAILS
6. COLUMNS AND FOOTINGS ARE NOTED ON PLAN AS FOLLOWS:

   COLUMN MARK, BASE PLATE MARK
   FTG. MARK, T.O. FTG. EL.

7. REFER TO 5/S302 FOR TYPICAL FOOTING ELEVATION.

PLAN LEGEND:

- INDICATES STRUCTURAL CONCRETE SLAB STEP
- INDICATES STRUCTURAL CONCRETE SLOPE CHANGE
- INDICATES STRUCTURAL CONCRETE STEP AND SLOPE CHANGE
- INDICATES STRUCTURAL CONCRETE SLOPE EXTENTS
- INDICATES STRUCTURAL DECK OR SLAB SPAN
- INDICATES WOOD TRUSS @ 24" O.C. DESIGNED BY OTHERS. PROVIDE 2x12 SCABS AT ALTERNATING OVERHANGS AT EXTERIOR, REF. 4/S610
- INDICATES 2X6 PURLINS @ 24" O.C. ABOVE TRUSSES
- INDICATES LOAD BEARING WOOD WALL. REFER TO GENERAL NOTES AND SHEAR WALL SCHEDULE FOR SHEATHING REQUIREMENTS, IF ANY. STUDS TO BE 2x6 @ 16" O.C. MAX., U.O.N.
- SW-X — INDICATES WOOD SHEAR WALL w/ SHEATHED SIDE INDICATED BY SIDE w/ TAG; REF. 2/S602 FOR SHEAR WALL SCHEDULE
- H-X — INDICATES WOOD SHEAR WALL HOLDDOWN LOCATION AND TYPE; REF. 1/S602 FOR HOLDDOWN SCHEDULE
- WB-X — INDICATES LATERAL WIND BRACE


Architectural Engineers Collaborative
Lamar Central
3800 North Lamar Blvd.
Suite 330
Austin, Tx 78756
P 512.472.2111
www.aecollab.com
FIRM REG.#: F-1985
AEC JOB#: 17012

FORD POWELL &CARSON
Architects & Planners, Inc.
Architecture
Planning
Preservation
Interior Design
711 Navarro, Suite 400
San Antonio, Texas 78205
210/226-1246
92706


TEXAS PARKS & WILDLIFE

STATE OF TEXAS
KARINA TRIBBLE
109642
LICENSED
PROFESSIONAL ENGINEER
4/9/21

# SOUTH LLANO RIVER STATE PARK
## HEADQUARTERS BUILDING RENOVATION AND EXPANSION
PROJECT NUMBER: 134245

DATE: 04/09/2021
DESIGNED BY:MN
DRAWN BY:S
REVIEWED BY:KT
REVISED:
REVISED:
REVISED:

100% CONSTRUCTION DOCUMENTS

SHEET TITLE
TUBE STORAGE BUILDING PLANS

SHEET NUMBER
S204

| DOWEL SCHEDULE | | | |
|---|---|---|---|
| MARK | SIZE | A | B |
| DWL A | #4 | 8" | 3'-0" |
| DWL B | #4 | 2'-6" | 3'-0" |
| DWL C | #4 | - | 4'-0" |
| DWL D | #4 | 8" | 6'-0" |
| DWL E | #4 | - | 6'-0" |

NOTES:

1. SCHEDULED DOWELS ARE MARKED "DWL" ON THE SECTIONS AND DETAILS.
2. DOWEL SPACING TO BE THE SAME AS SLAB OR WALL REINFORCEMENT UNLESS OTHERWISE NOTED ON DETAILS.

## 1 TYPICAL DETAIL STANDARD DOWEL SCHEDULE

NO SCALE

| REINFORCEMENT SPLICE LENGTH SCHEDULE | | | | | | |
|---|---|---|---|---|---|---|
| | f'c=3000 psi CONCRETE | | f'c=4000 psi CONCRETE | | f'c=5000 psi CONCRETE | |
| CLASS / BAR SIZE | "A" | "B" | "A" | "B" | "A" | "B" |
| #3 | 1'-5" | 1'-10" | 1'-3" | 1'-7" | 1'-1" | 1'-5" |
| #4 | 1'-10" | 2'-5" | 1'-7" | 2'-1" | 1'-5" | 1'-10" |
| #5 | 2'-4" | 3'-0" | 2'-0" | 2'-7" | 1'-10" | 2'-4" |
| #6 | 2'-9" | 3'-7" | 2'-5" | 3'-1" | 2'-2" | 2'-9" |
| #7 | 4'-1" | 5'-3" | 3'-6" | 4'-6" | 3'-1" | 4'-1" |
| #8 | 4'-7" | 6'-0" | 4'-0" | 5'-2" | 3'-7" | 4'-7" |
| #9 | 5'-2" | 6'-10" | 4'-6" | 5'-10" | 4'-0" | 5'-3" |
| #10 | 5'-10" | 7'-7" | 5'-1" | 6'-7" | 4'-6" | 5'-10" |
| #11 | 6'-6" | 8'-5" | 5'-7" | 7'-3" | 5'-0" | 6'-6" |

NOTES:

1. WHERE SPLICE TYPE IS NOT INDICATED, USE CLASS "B" SPLICE.
2. LAP LENGTHS LISTED ABOVE APPLY UNDER THE FOLLOWING CONDITIONS:
   A. BEAM & COLUMN BARS ARE SPACED AT LEAST 1 BAR DIAMETERS O.C. WITH CLEAR COVER NOT LESS THAN 1 BAR DIAMETER.
   B. WALL & SLAB BARS ARE SPACED AT LEAST 2 BAR DIA. O.C.
   C. FOR UNCOATED AND ZINC-COATED (GALVANIZED) REINFORCEMENT.
   D. FOR REINFORCEMENT THAT CONFORMS DEFORMED NEW BILLET STEEL BARS IN ACCORDANCE TO ASTM A615 GR. 60.
3. WHERE CLEAR COVER OR CLEAR SPACING FOR MASONRY REINF. IS LESS THAN 5 BAR DIAMETERS, INCREASE SPLICE LENGTHS SHOWN BY MULTIPLYING LENGTHS BY MAX. RATIO OF 5 BAR DIAMETERS TO CLEAR COVER OR SPACING.
4. FOR HORIZ. TOP BARS w/ 12" OF CONCRETE CAST BELOW, MULTIPLY TABULATIONS BY 1.3.
5. WHERE A LARGER BAR LAPS A SMALLER BAR, THE SMALLER SCHEDULED LAP LENGTH APPLIES U.O.N.
6. REFER TO "CONCRETE REINFORCING" SECTION OF THE GENERAL NOTES FOR FURTHER INFORMATION.
8. FOR LIGHTWEIGHT CONCRETE, MULTIPLY TABULATIONS BY 1.3.

## 2 TYPICAL DETAIL LAP SPLICE SCHEDULE

NO SCALE

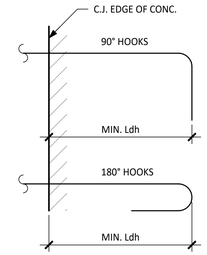


| HOOK DEVELOPMENT LENGTH SCHEDULE, Ldh | | | |
|---|---|---|---|
| BAR SIZE | 3000 psi | 4000 psi | 5000 psi |
| #3 | 9" | 8" | 7" |
| #4 | 11" | 10" | 9" |
| #5 | 1'-2" | 1'-0" | 11" |
| #6 | 1'-5" | 1'-3" | 1'-1" |
| #7 | 1'-8" | 1'-5" | 1'-3" |
| #8 | 1'-10" | 1'-7" | 1'-5" |
| #9 | 2'-1" | 1'-10" | 1'-8" |
| #10 | 2'-4" | 2'-1" | 1'-10" |
| #11 | 2'-7" | 2'-3" | 2'-0" |

NOTES:

1. TABULATED VALUES ARE BASED ON GRADE 60 REINFORCING BARS AND NORMAL WEIGHT CONCRETE.
2. FOR TABULATED BARS SIZES ONLY:
   A. IF CONCRETE COVER PER ACI 318-14, SECTION 25.4.3.2, TABLE 25.4.3.2, THEN A MODIFICATION FACTOR OF 0.7 MAY BE APPLIED BUT THE LENGTH MUST NOT BE LESS THAN 8 x db NOR 6 IN.
   B. IF HOOK IS ENCLOSED IN TIES OR STIRRUPS PER ACI 318-14, SECTION 25.4.3.2, TABLE 25.4.3.2, THEN A MODIFICATION FACTOR OF 0.8 MAY BE APPLIED BUT THE LENGTH MUST NOT BE LESS THAN 8 x db NOR 6 IN.
3. FOR EPOXY-COATED HOOKS, MULTIPLY THE TABULATED VALUES BY 1.2.
4. FOR LIGHTWEIGHT CONCRETE, INCREASE THE TABULATED VALUES BY 1/3.

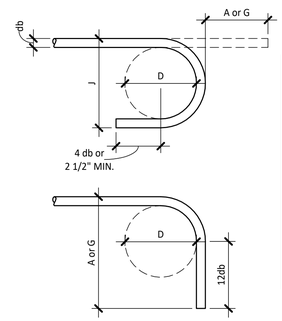


| STANDARD HOOK SCHEDULE | | | | |
|---|---|---|---|---|
| BAR SIZE | D | 180" HOOK | | 90" HOOK |
| | | A or G | J | A or G |
| #3 | 2 1/4" | 5" | 3" | 6" |
| #4 | 3" | 6" | 4" | 8" |
| #5 | 3 3/4" | 7" | 5" | 10" |
| #6 | 4 1/2" | 8" | 6" | 12" |
| #7 | 5 1/4" | 10" | 7" | 1'-2" |
| #8 | 6" | 11" | 8" | 1'-4" |
| #9 | 9 1/2" | 1'-3" | 11 3/4" | 1'-7" |
| #10 | 10 3/4" | 1'-5" | 1'-1 1/4" | 1'-10" |
| #11 | 12" | 1'-7" | 1'-2 3/4" | 2'-0" |

## 3 TYPICAL DETAIL STANDARD HOOK SCHEDULE

NO SCALE

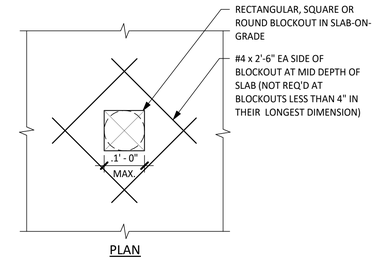


## 4 TYPICAL DETAIL ADDITIONAL REINFORCING AT BLOCKOUT IN SLAB-ON-GRADE

NO SCALE

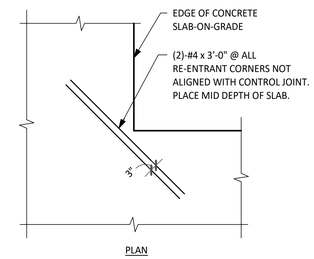


## 5 TYPICAL DETAIL SLAB-ON-GRADE RE-ENTRANT CORNER REINF.

NO SCALE

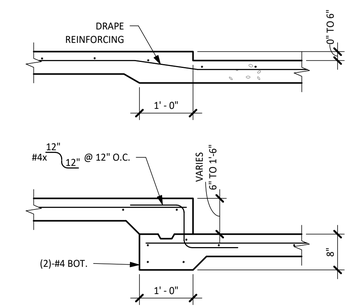


## 6 TYPICAL DETAIL DROP IN SLAB-ON-GRADE

NO SCALE

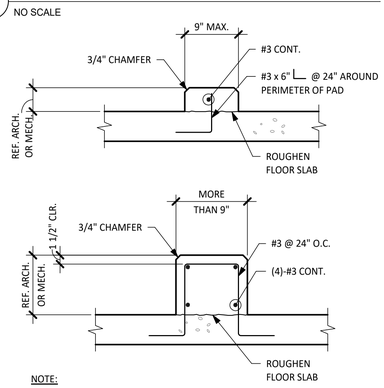


NOTE:

PROVIDE CONSTRUCTION JOINTS @ 20'-0" O.C. MAX.

## 9 TYPICAL DETAIL SLAB-ON-GRADE OR STRUCTURAL SLAB MECHANICAL CURB

NO SCALE

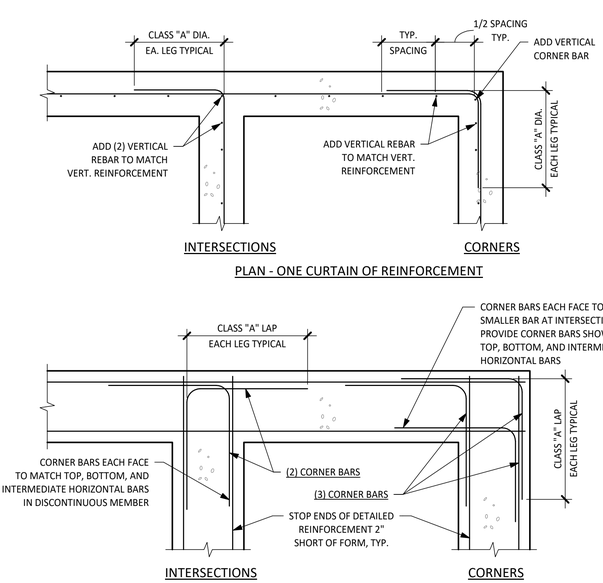


NOTES:

1. WHERE 90 DEGREE HOOKS ARE SCHEDULED OR DETAILED FOR BARS, CORNER BARS MAY BE OMITTED FOR THAT LAYER.
2. MATCH SIZE, LOCATION AND NUMBER OF HORIZONTAL BEAM AND WALL BARS, EXCEPT THAT WHERE THERE ARE MORE THAN 2 TOP OR BOTTOM BARS, ONLY THE INSIDE AND OUTSIDE BARS MUST BE MATCHED.

## 10 TYPICAL DETAIL WALL OR GRADE BEAM REINFORCING

NO SCALE

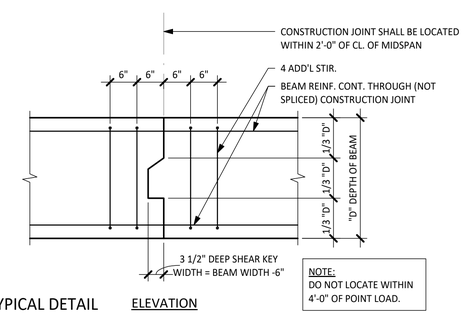


NOTE:
DO NOT LOCATE WITHIN 4'-0" OF POINT LOAD.

ELEVATION

## 7 TYPICAL DETAIL BEAM CONSTRUCTION JOINT

NO SCALE




## 8 TYPICAL DETAIL DROP IN SLAB-ON-GRADE

NO SCALE

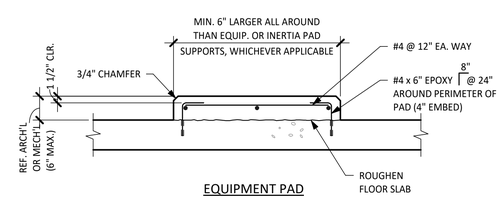


EQUIPMENT PAD

NOTES:

1. PADS PER DETAIL TO BE PROVIDED UNDER EQUIPMENT SUPPORTED ON SLAB-ON-GRADE OR ELEVATED SLABS.
2. COORDINATE MECHANICAL PAD SIZE, LOCATION AND EMBEDDED ITEMS WITH MEP DRAWINGS AND EQUIPMENT MANUFACTURER.

## 11 TYPICAL DETAIL MECHANICAL PAD

NO SCALE

TEXAS PARKS & WILDLIFE

STATE OF TEXAS
KARINA TRIBBLE
109642
LICENSED
PROFESSIONAL ENGINEER
4/9/21

# SOUTH LLANO RIVER STATE PARK
## HEADQUARTERS BUILDING RENOVATION AND EXPANSION
PROJECT NUMBER: 134245

DATE: 04/09/2021
DESIGNED BY:MN
DRAWN BY:S. EV
REVIEWED BY:KT
REVISED:
REVISED:
REVISED:


Architectural Engineers Collaborative
Lamar Central
3800 North Lamar Blvd.
Suite 330
Austin, Tx 78756
P 512.472.2111
www.aecollab.com
FIRM REG.#: F-1985
AEC JOB#: 17012

FORD POWELL &CARSON
Architects & Planners, Inc.
Architecture Planning Preservation Interior Design
711 Navarro, Suite 400
San Antonio, Texas 78205
210/226-1246
92706


SHEET TITLE
CONCRETE TYPICAL DETAILS

SHEET NUMBER
S300

100% CONSTRUCTION DOCUMENTS

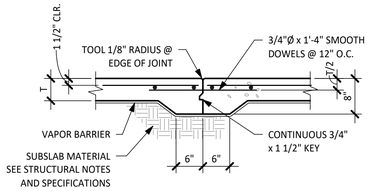


CONSTRUCTION JOINT

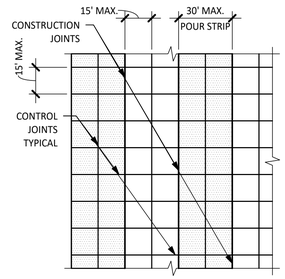


POUR STRIP LAYOUT

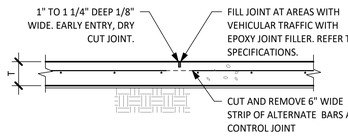


CONTROL JOINT

NOTES:

1. SEE PLAN FOR THICKNESS OF SLAB (T) AND REINFORCING.
2. PROVIDE A CONSTRUCTION OR A CONTROL JOINT ON THE CENTERLINES OF COLUMNS, U.O.N.
3. SLABS SHALL BE POURED IN A STRIP PATTERN AND CUT IN A JOINT PATTERN w/ WIDTHS NOT EXCEEDING THOSE SHOWN, U.O.N. CONTRACTOR SHALL SUBMIT JOINT PATTERNS FOR REVIEW.
4. IF METAL FORMS ARE USED, REMOVE THEM BEFORE POURING ADJACENT SLAB.
5. FOR SLABS WITH THICKNESS (T) GREATER THAN 6", THICKENED EDGES ARE NOT REQUIRED AT JOINTS.
6. INFILL STRIPS CAN BE PLACED AFTER INITIAL SLAB STRIPS HAVE CURED FOR 3 DAYS.

TYPICAL DETAIL
**1** SLAB-ON-GRADE
NO SCALE

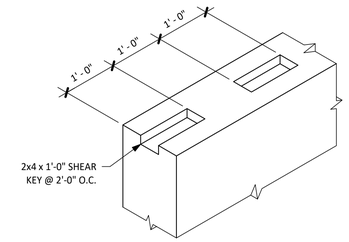


INTERMITTENT ABOVE GRADE

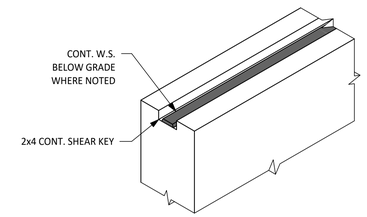


CONTINUOUS BELOW GRADE

TYPICAL DETAIL
**2** GRADE BEAM SHEAR KEY AT HORIZONTAL JOINT
NO SCALE

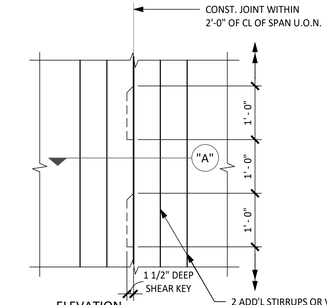


ELEVATION

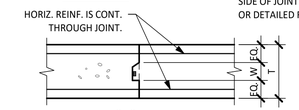


SECTION "A"

| KEY WIDTH | |
|---|---|
| T | W |
| ≤12" | 3 1/2" |
| 12"-16" | 5 1/2" |
| 16"-20" | 7 1/4" |
| 20"-24" | 9 1/4" |
| 24"-30" | 11 1/4" |

NOTES:

1. THIS DETAIL APPLIES TO GRADE BEAMS DEEPER THAN 4'-0" AND ALL WALLS.
2. HORIZ. REINF. (NOT SHOWN) IS CONT. THRU CONSTRUCTION JOINT.

TYPICAL DETAIL
**3** DEEP GRADE BEAM AND WALL VERTICAL CONSTRUCTION JOINT
NO SCALE

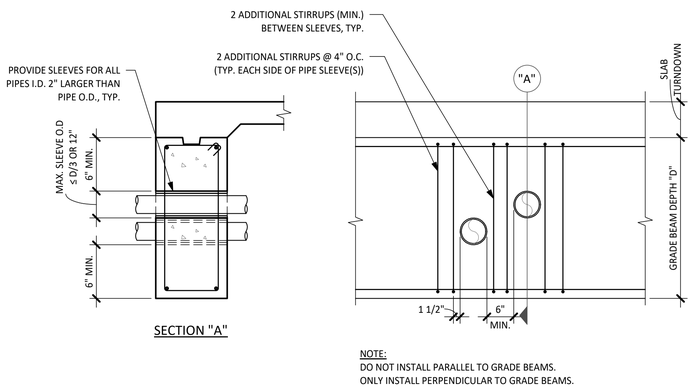


NOTE:
DO NOT INSTALL PARALLEL TO GRADE BEAMS.
ONLY INSTALL PERPENDICULAR TO GRADE BEAMS.

TYPICAL DETAIL
**4** HORIZONTAL PIPE PENETRATIONS THROUGH GRADE BEAM
NO SCALE

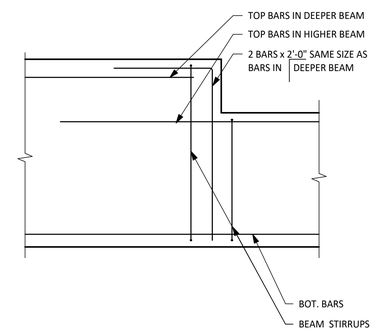


TYPICAL DETAIL
**5** STEP IN TOP GRADE BEAM
NO SCALE

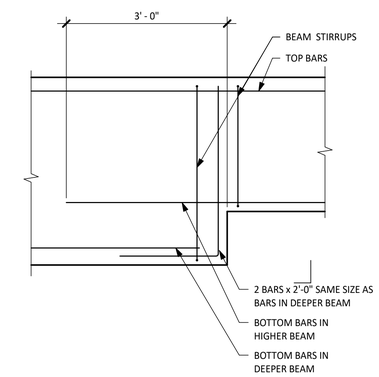


TYPICAL DETAIL
**6** STEP IN BOTTOM GRADE BEAM
NO SCALE

TEXAS PARKS & WILDLIFE

STATE OF TEXAS
KARINA TRIBBLE
109642
LICENSED
PROFESSIONAL ENGINEER
4/9/21

# SOUTH LLANO RIVER STATE PARK
## HEADQUARTERS BUILDING RENOVATION AND EXPANSION
PROJECT NUMBER: 134245

DATE: 04/09/2021
DESIGNED BY:MN
DRAWN BY:S, EV
REVIEWED BY:KT
REVISED:
REVISED:
REVISED:


Architectural Engineers Collaborative
Lamar Central
3800 North Lamar Blvd.
Suite 330
Austin, Tx 78756
P 512.472.2111
www.aecollab.com
FIRM REG.#: F-1985
AEC JOB#: 17012

FORD POWELL &CARSON
Architects & Planners, Inc.
Architecture
Planning
Preservation
Interior Design
711 Navarro, Suite 400
San Antonio, Texas 78205
210/226-1246
92706


SHEET TITLE
CONCRETE TYPICAL DETAILS

SHEET NUMBER
S301

100% CONSTRUCTION DOCUMENTS

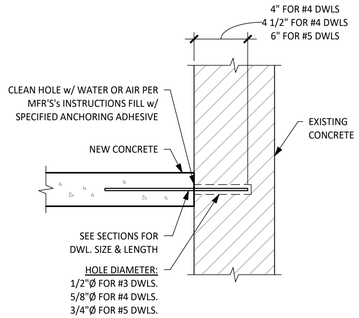


ADHESIVE DOWEL NOTES:

1. REF. GENERAL NOTES FOR ADHESIVE DOWELING SYSTEMS.
2. LOCATE EXISTING REINFORCING STEEL IN THE CONCRETE USING NON-DESTRUCTIVE METHODS & POSITION DOWEL LOCATIONS TO AVOID CONFLICTS WITH EXISTING REINFORCING.
3. ALL ABANDONED HOLES SHALL BE FILLED WITH NONSHRINK GROUT.

TYPICAL DETAIL
1 ADHESIVE DOWELING
NO SCALE

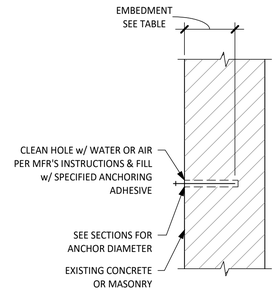


ADHESIVE ANCHOR NOTES:

1. REFER TO GENERAL NOTES FOR ADHESIVE ANCHOR TYPE.
2. LOCATE EXISTING REINFORCING STEEL IN THE CONCRETE USING NON-DESTRUCTIVE METHODS & POSITION ANCHOR LOCATIONS TO AVOID CONFLICTS WITH EXISTING REINFORCING. ANCHOR LOCATIONS CAN BE ADJUSTED BY A MAXIMUM OF 1 1/2" FROM DETAILED LOCATIONS TO AVOID CONFLICTS, UNLESS NOTED OTHERWISE.
3. BASED ON FIELD VERIFIED LOCATIONS OF REINFORCING STEEL & EMBEDDED ITEMS, THE CONTRACTOR SHALL CREATE TEMPLATES FOR EACH ANCHOR GROUP.
4. ALL ABANDONED HOLES SHALL BE FILLED WITH NONSHRINK GROUT.
5. HOLES IN CONNECTION PLATES SHALL BE NO MORE THAN 1/16" LARGER THAN THE ANCHOR DIAMETER. IF LARGER HOLES ARE REQUIRED FOR ERECTION PURPOSES, PROVIDE 1/4"x3x3 PLATE WASHERS CONTINUOUSLY WELDED TO THE CONNECTION PLATE.

| ANCHOR INSTALLATION INFORMATION | | | |
|---|---|---|---|
| ANCHOR DIAMETER | 1/2" | 5/8" | 3/4" |
| HOLE DIAMETER | 9/16" | 11/16" | 13/16" |
| EMBEDMENT FOR HAS STD. | 4 1/4" | 5" | 6 5/8" |
| MAX. TORQUE (ft.-lbs) | 30 | 75 | 150 |

TYPICAL DETAIL
2 ADHESIVE ANCHOR FOR SOLID & GROUTED MASONRY & CONCRETE
NO SCALE

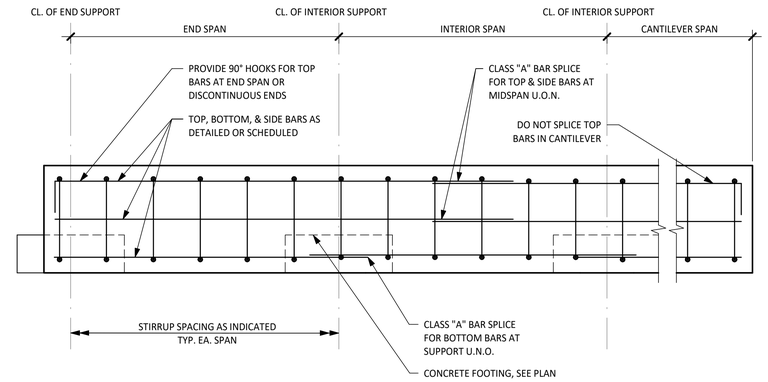


TYPICAL DETAIL
3 GRADE BEAM REINFORCING
NO SCALE

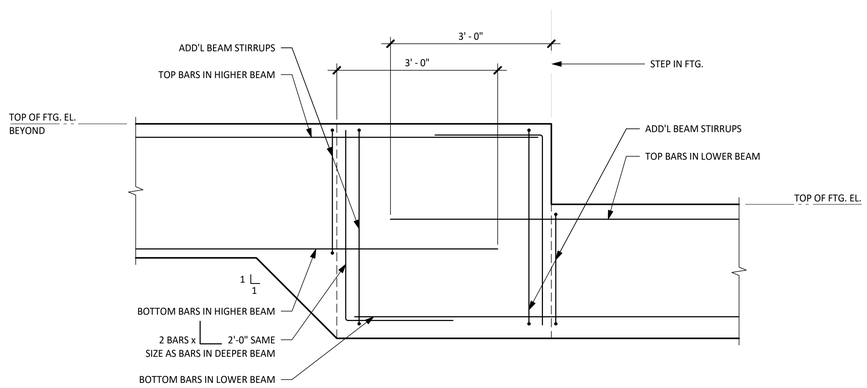


TYPICAL DETAIL
4 STEP IN GRADE BEAM
NO SCALE

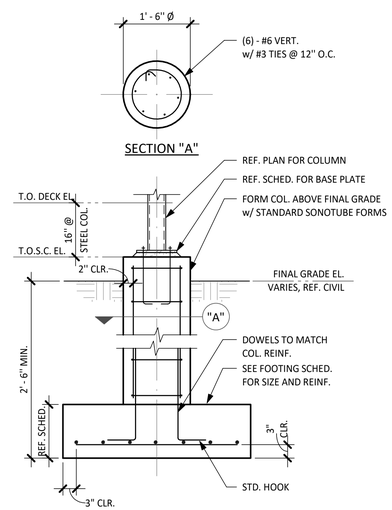


TYPICAL DETAIL
5 FOOTING WITH PILASTER ABOVE GRADE
NO SCALE

| FOOTING SCHEDULE | | | | | |
|---|---|---|---|---|---|
| | FOOTING SIZE | | BOTTOM REINFORCING | | |
| MARK | LENGTH x WIDTH | DEPTH★ | LONG WAY | SHORT WAY | NOTES |
| F2.5 | 2'-6" x 2'-6" | 12" | (3) - #6 | (3) - #6 | |
| F3 | 3'-0" x 3'-0" | 12" | (4) - #6 | (4) - #6 | |

★ ALL INTERIOR FOOTINGS, I.E. ALL FOOTINGS NOT AT PERIMETER, ARE 2'-0" DEEP U.O.N.

TYPICAL DETAIL
6 FOOTING SCHEDULE
NO SCALE

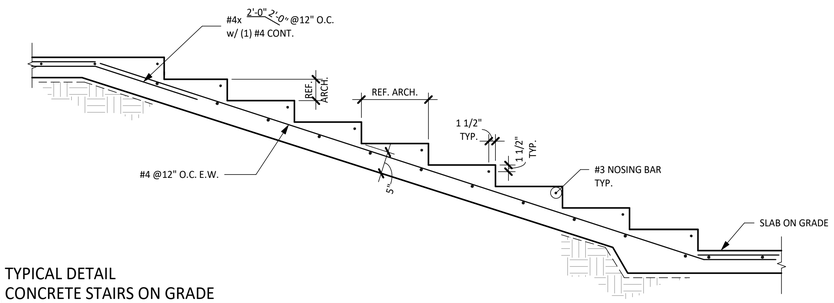


TYPICAL DETAIL
7 CONCRETE STAIRS ON GRADE
NO SCALE

TEXAS PARKS & WILDLIFE

STATE OF TEXAS
KARINA TRIBBLE
109642
LICENSED
PROFESSIONAL ENGINEER
4/9/21

# SOUTH LLANO RIVER STATE PARK
## HEADQUARTERS BUILDING RENOVATION AND EXPANSION
PROJECT NUMBER: 134245

DATE: 04/09/2021
DESIGNED BY:MN
DRAWN BY:S, EV
REVIEWED BY:KT
REVISED:
REVISED:
REVISED:

100% CONSTRUCTION DOCUMENTS

SHEET TITLE
CONCRETE TYPICAL DETAILS

SHEET NUMBER
S302


Architectural Engineers Collaborative
Lamar Central
3800 North Lamar Blvd.
Suite 330
Austin, Tx 78756
P 512.472.2111
www.aecollab.com
FIRM REG.#: F-1985
AEC JOB#: 17012

FORD POWELL &CARSON
Architects & Planners, Inc.
Architecture
Planning
Preservation
Interior Design
711 Navarro, Suite 400
San Antonio, Texas 78205
210/226-1246
92706

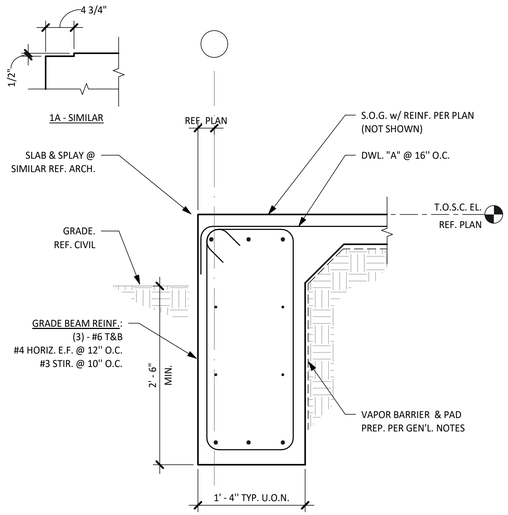


1A 1 TYPICAL GRADE BEAM DETAIL
SCALE: 1" = 1'-0"

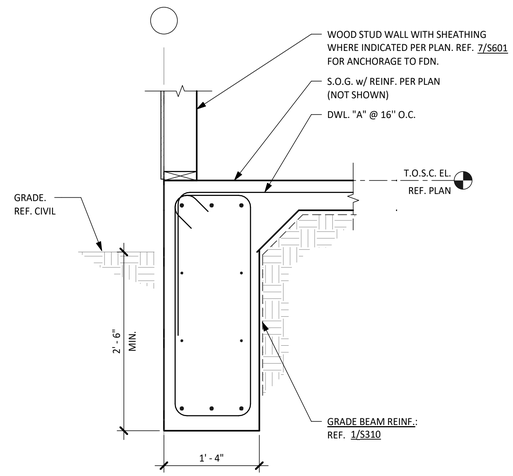


2 SECTION - GRADE BEAM BELOW WALL
SCALE: 1" = 1'-0"

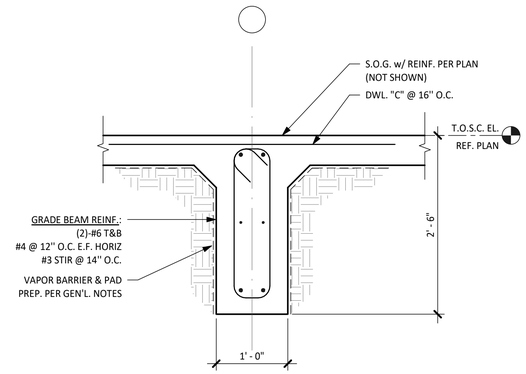


3 SECTION - TYPICAL INTERIOR GRADE BEAM
SCALE: 1" = 1'-0"

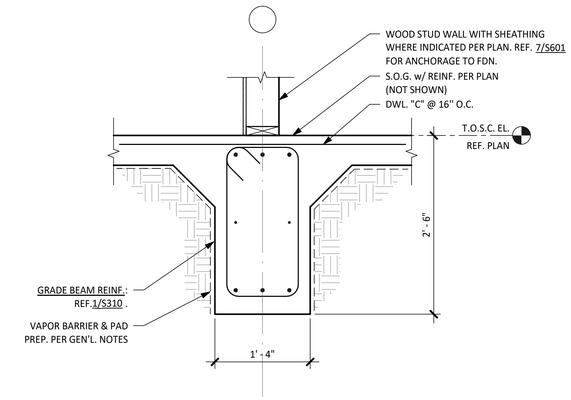


4 SECTION - INTERIOR GRADE BEAM BELOW SHEAR WALL
SCALE: 1" = 1'-0"

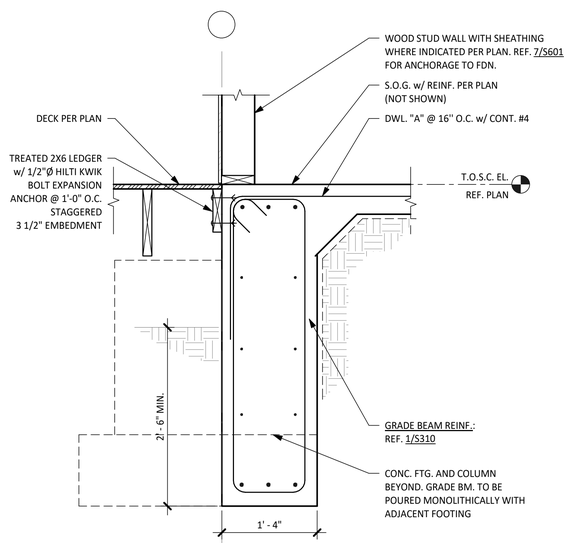


5 SECTION - DOG TROT AND BUILDING INTERFACE
SCALE: 1" = 1'-0"

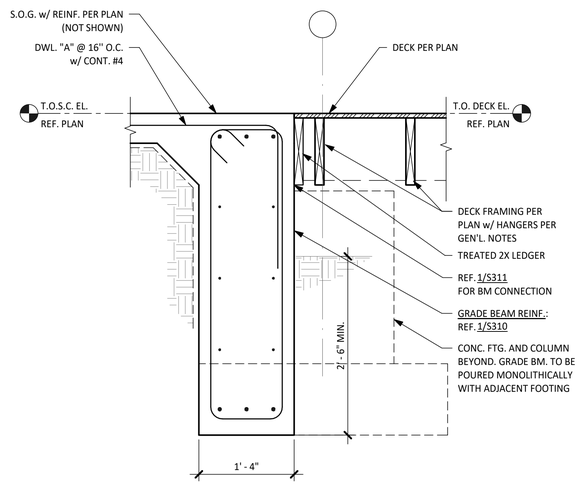


6 DETAIL - DOG TROT FRAMING
SCALE: 1" = 1'-0"

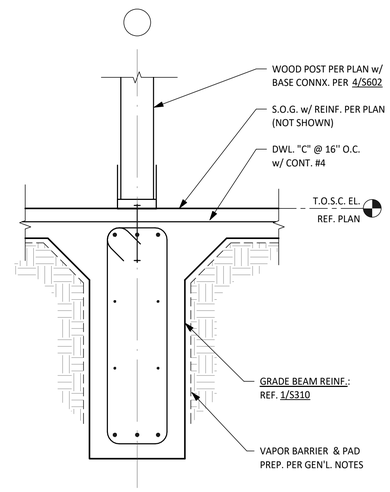


7 DETAIL - POST BASE
SCALE: 1" = 1'-0"

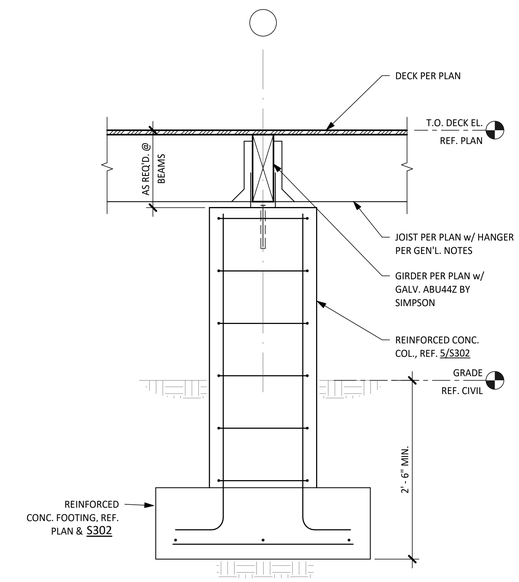


8 DETAIL - WOOD BEAM ON CONCRETE COLUMN
SCALE: 1" = 1'-0"

TEXAS PARKS & WILDLIFE

STATE OF TEXAS
KARINA TRIBBLE
109642
LICENSED
PROFESSIONAL ENGINEER
4/9/21

# SOUTH LLANO RIVER STATE PARK
## HEADQUARTERS BUILDING RENOVATION AND EXPANSION
PROJECT NUMBER: 134245

DATE: 04/09/2021
DESIGNED BY:MN
DRAWN BY:S, EV
REVIEWED BY:KT
REVISED:
REVISED:
REVISED:


Architectural Engineers Collaborative
Lamar Central
3800 North Lamar Blvd.
Suite 330
Austin, Tx 78756
P 512.472.2111
www.aecollab.com
FIRM REG.#: F-1985
AEC JOB#: 17012

FORD POWELL &CARSON
Architects & Planners, Inc.
Architecture
Planning
Preservation
Interior Design
711 Navarro, Suite 400
San Antonio, Texas 78205
210/226-1246
92706


SHEET TITLE
CONCRETE DETAILS

SHEET NUMBER
S310

100% CONSTRUCTION DOCUMENTS

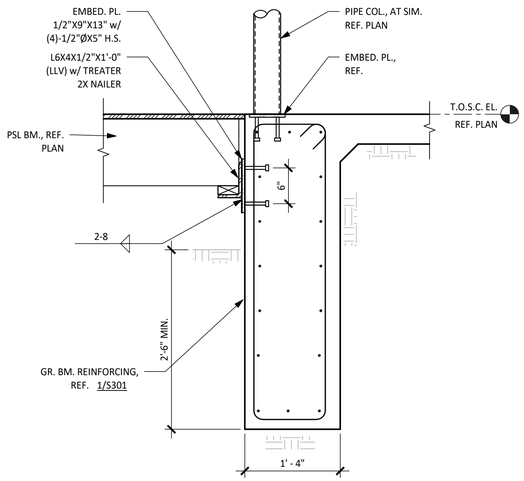


1 DETAIL - FRAMING AT GRADE BEAM
SCALE: 1" = 1'-0"

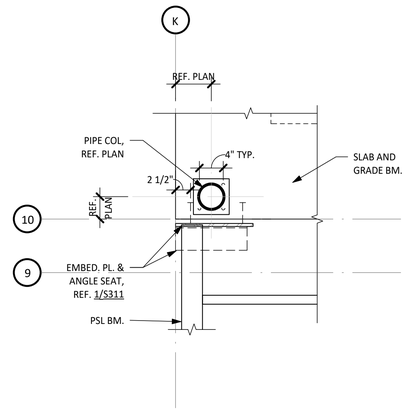


2 PLAN DETAIL - PIPE COLUMN BASE PLATE
SCALE: 1" = 1'-0"

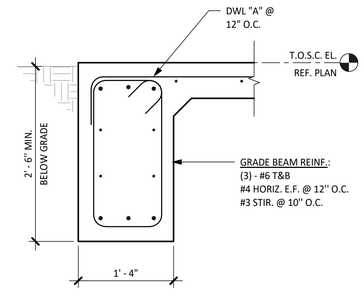


3 DETAIL - FOUNDATION AT PUMP STATION
SCALE: 1" = 1'-0"

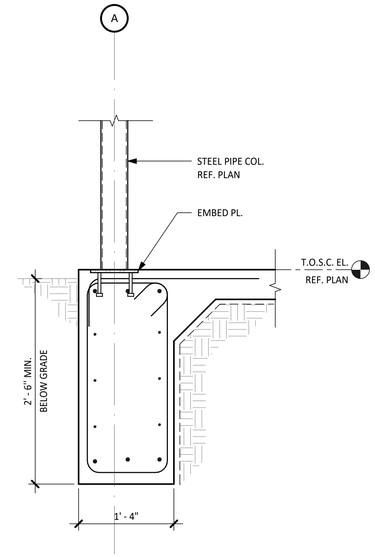


4 DETAIL - STEEL COLUMN BASE
SCALE: 1" = 1'-0"

TEXAS PARKS & WILDLIFE

STATE OF TEXAS
KARINA TRIBBLE
109642
LICENSED
PROFESSIONAL ENGINEER
4/9/21

# SOUTH LLANO RIVER STATE PARK
## HEADQUARTERS BUILDING RENOVATION AND EXPANSION
PROJECT NUMBER: 134245

DATE: 04/09/2021
DESIGNED BY: MN
DRAWN BY: S. EV
REVIEWED BY: KT
REVISED:
REVISED:
REVISED:

Architectural Engineers Collaborative
Lamar Central
3800 North Lamar Blvd.
Suite 330
Austin, Tx 78756
P 512.472.2111
www.aecollab.com
FIRM REG.#: F-1985
AEC JOB#: 17012

FORD POWELL & CARSON
Architects & Planners, Inc.
Architecture
Planning
Preservation
Interior Design
711 Navarro, Suite 400
San Antonio, Texas 78205
210/226-1246
92706

SHEET TITLE
CONCRETE DETAILS

SHEET NUMBER
S311

100% CONSTRUCTION DOCUMENTS

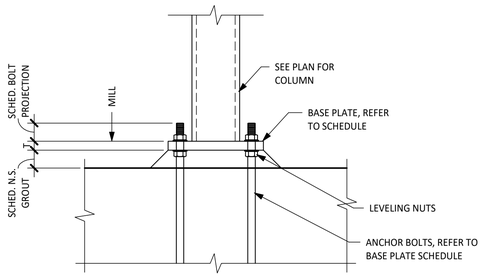


| BOLT PROJECTION AND GROUT THICKNESS SCHEDULE | |
|---|---|
| ANCHOR BOLT DIAMETER | BOLT PROJECTION & GROUT THICKNESS |
| 1" OR LESS | 1 1/2" |
| 1 1/8" TO 1 1/2" | 2" |
| 1 3/4" TO 2" | 2 1/2" |
| 2 1/4" TO 2 1/2" | 3" |

1 TYPICAL DETAIL
COLUMN BASE PLATES
NO SCALE

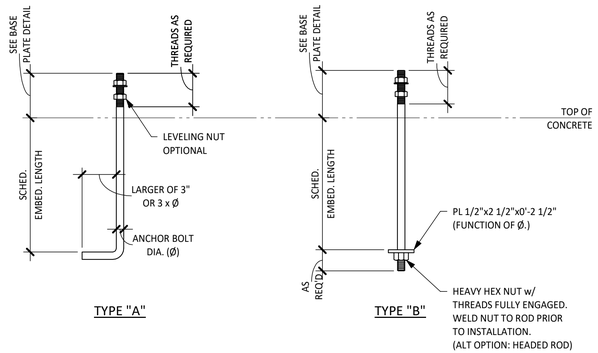


NOTES:

1. USE TYPE "A" ROD, TYPICAL, UNLESS NOTED OTHERWISE.
2. USE TYPE "B" ROD AT ALL WINDBRACE LOCATIONS.

2 TYPICAL DETAIL
ANCHOR ROD
NO SCALE

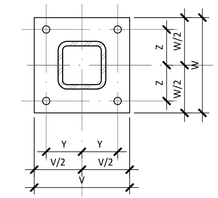


NOTES:

1. WELD TO BE 1/16" SMALLER THAN THICKNESS OF TUBE.
2. SEE DETAIL 1/S500 FOR BASE PLATE ELEVATION.
3. SEE DETAIL 1/S613 FOR WIND BRACE ELEVATION.

| ANCHOR ROD HOLES IN BASE PLATE | | | |
|---|---|---|---|
| ANCHOR ROD DIAMETER | HOLE DIAMETER | MIN. WASHER DIMENSION | MIN. WASHER THICKNESS |
| 3/4" | 1 5/16" | 2" | 1/4" |
| 7/8" | 1 9/16" | 2 1/2" | 5/16" |
| 1" | 1 13/16" | 3" | 3/8" |
| 1 1/4" | 2 1/16" | 3" | 1/2" |
| 1 1/2" | 2 5/16" | 3 1/2" | 1/2" |
| 1 3/4" | 2 3/4" | 4" | 5/8" |
| 2" | 3 1/4" | 5" | 3/4" |
| 2 1/2" | 3 1/4" | 5 1/2" | 7/8" |

| BASE PLATE AND EMBED PLATE SCHEDULE | | | | | |
|---|---|---|---|---|---|
| | | ANCHOR BOLT | | | |
| MARK | BASE PLATE DETAIL | TYPE | NUMBER | SIZE (Ø) | EMBED. LENGTH |
| BP-1 | 5/S500 | B | 6 | 3/4" | 1' - 0" |
| BP-2 | 6/S500 | B | 4 | 3/4" | 1' - 0" |
| BP-3 | 7/S500 | HEADED STUDS | 4 | 3/4" | 1' - 0" |
| BP-4 | 8/S500 | HEADED STUDS | 4 | 3/4" | 1' - 0" |

3 TYPICAL DETAIL
BASE PLATE SCHEDULE
NO SCALE

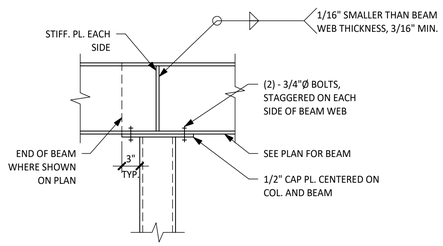


NOTES:

1. SEE ROOF PLAN FOR ROOF SLOPE. SLOPE CAP PLATES ACCORDINGLY.
2. STIFFENER PLATES SHALL BE EQUAL IN THICKNESS TO THE COLUMN WALL THICKNESS OR BEAM WEB THICKNESS, WHICHEVER IS GREATER.
3. CONNECT INTERSECTING BEAMS TO STIFFENER PLATES USING BOLTS IN SINGLE SHEAR DESIGNED FOR ECCENTRIC BEAM REACTION.

4 TYPICAL DETAIL
CAP PLATE-BOLTED CONNECTION
NO SCALE

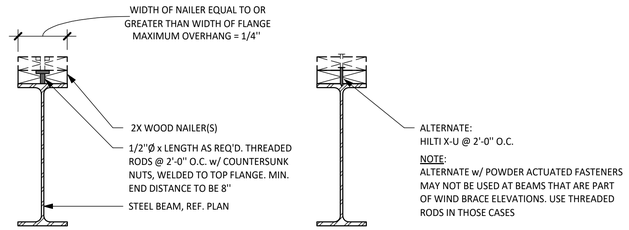


9 TYPICAL DETAIL
STEEL BEAM WITH NAILER
NO SCALE

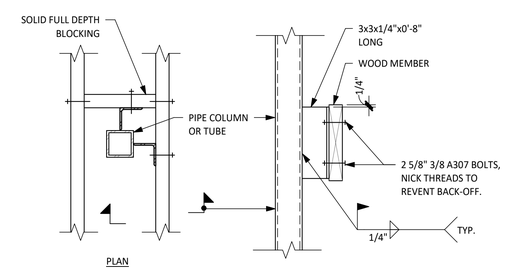


10 TYPICAL DETAIL
STEEL COLUMN BRACING AT WOOD FRAMED LEVELS
NO SCALE

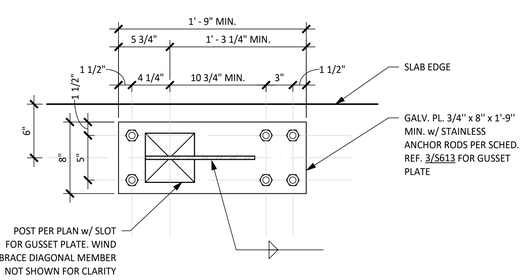


5 TYPICAL DETAIL
BASE PLATE DETAIL - BP-1
NO SCALE

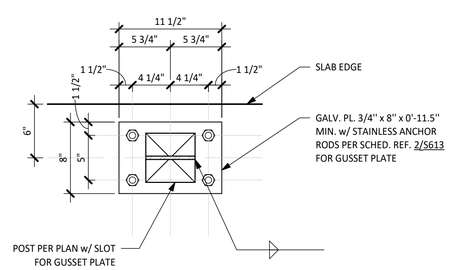


6 TYPICAL DETAIL
BASE PLATE DETAIL - BP-2
NO SCALE

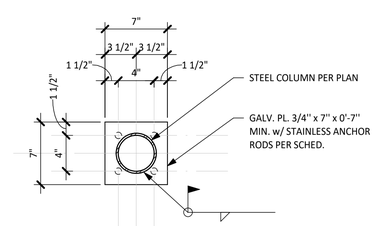


NOTES:

1. WELD TO BE MINIMUM SIZE REQUIRED BY A.I.S.C. FOR THICKNESS OF EMBED PLATE USED.
2. SEE DETAIL 5/S302 FOR EMBED PLATE ELEVATION

7 TYPICAL DETAIL
EMBED PLATE DETAIL - BP-3
NO SCALE

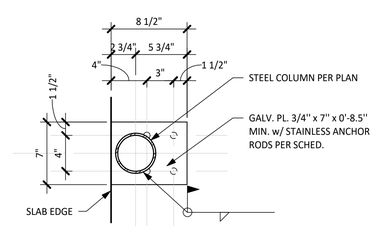


NOTES:

1. WELD TO BE MINIMUM SIZE REQUIRED BY A.I.S.C. FOR THICKNESS OF EMBED PLATE USED.
2. SEE DETAIL 5/S302 FOR EMBED PLATE ELEVATION

8 TYPICAL DETAIL
EMBED PLATE DETAIL - BP-4
NO SCALE

TEXAS PARKS & WILDLIFE

STATE OF TEXAS
KARINA TRIBBLE
109642
LICENSED
PROFESSIONAL ENGINEER
4/9/21

# SOUTH LLANO RIVER STATE PARK
## HEADQUARTERS BUILDING RENOVATION AND EXPANSION
PROJECT NUMBER: 134245

DATE: 04/09/2021
DESIGNED BY:MN
DRAWN BY:S. EV
REVIEWED BY:KT
REVISED:
REVISED:
REVISED:


Architectural Engineers Collaborative
Lamar Central
3800 North Lamar Blvd.
Suite 330
Austin, Tx 78756
P 512.472.2111
www.aecollab.com
FIRM REG.#: F-1985
AEC JOB#: 17012

FORD POWELL &CARSON
Architects & Planners, Inc.
Architecture
Planning
Preservation
Interior Design
711 Navarro, Suite 400
San Antonio, Texas 78205
210/226-1246
92706


SHEET TITLE
STEEL TYPICAL DETAILS

SHEET NUMBER
S500

100% CONSTRUCTION DOCUMENTS

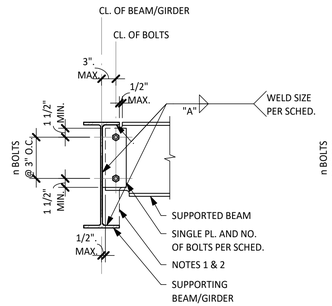


NOTES:

1. IF SUPPORTED BEAM IS LESS THAN 1/2 OF BOLTS TO CONNECTION AT GIRDER.
2. EXTEND TAB PLATE TO BOTTOM FLANGE AT PERIMETER CONDITION.

A ONE-SIDED CONNECTION - BEAMS TO GIRDER

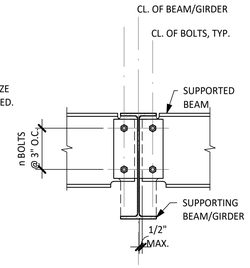


NOTE:

REF. DETAIL "A" FOR INFO NOT SHOWN

B TWO-SIDED CONNECTION - BEAMS TO GIRDER

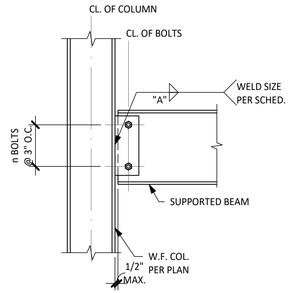


NOTE:

REF. DETAIL "A" FOR INFO NOT SHOWN

C BEAM TO COLUMN FLANGE CONNECTION

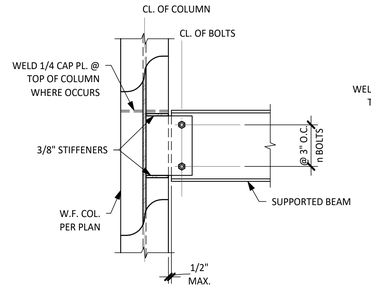


NOTE:

REF. DETAIL "A" FOR INFO NOT SHOWN

D EXTENDED PLATE, BEAM TO COLUMN WEB CONNECTION

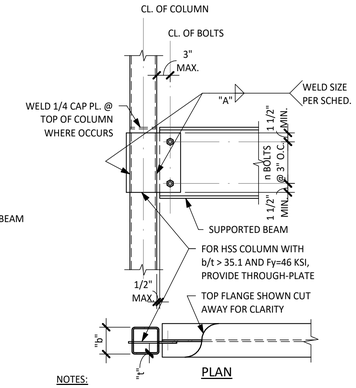


NOTES:

1. PIPE COLUMN CONNECTION IS SIMILAR.
2. SINGLE SHEAR PLATE CONNECTION SHOWN APPLIES TO RIGHT ANGLE CONNECTIONS AND SKEWED CONNECTIONS UP TO 30° FROM RIGHT ANGLE.

E EXTENDED PLATE BEAM TO COLUMN WEB CONNECTION

STANDARD SINGLE PLATE CONNECTION

| BEAM SIZE | NO. OF ROWS OF BOLTS(n) | BOLT DIAMETER | PLATE THICKNESS | WELD SIZE A | MAX. BEAM REACTION (KIPS) |
|---|---|---|---|---|---|
| W8 | 2 | 3/4" | 1/4" | 1/4" | 12 |
| W10 | 2 | | | | 16 |
| W12 | 3 | | | | 24 |
| W14 | 3 | | 5/16" | | 30 |
| W16 | 4 | | | | 40 |
| W18 | 5 | | | | 50 |
| W21 | 6 | 7/8" | 3/8" | | 73 |
| W24 | 7 | | | | 85 |
| W27 | 8 | | | | 97 |
| W30 | 8 | | | | 97 |
| W33 | 8 | | | | 97 |
| W36 | 10 | | 1/2" | 5/16" | 140 |
| W40 | 10 | | | | 140 |
| W44 | 10 | | | | 140 |

F SINGLE PLATE CONNECTION SCHEDULE

NOTES:

1. ALL OTHER CONNECTIONS DEVIATING FROM TYPICAL CONNECTIONS SHALL BE DESIGNED AND DETAILED BY A PROFESSIONAL ENGINEER WORKING UNDER THE GUIDANCE OF THE CONTRACTOR. REF. GENERAL NOTES UNDER "STRUCTURAL STEEL CONNECTIONS."
2. NOTED REACTIONS ARE FOR SERVICE LOADS.
3. BOLTS ARE A325N WITH STANDARD HOLES.
4. SCHEDULED SHEAR PLATE CONNECTIONS APPLY TORIGHT ANGLE CONNECTIONS AND SKEWED CONNECTIONS UP TO 30° FROM RIGHT ANGLE.
5. BEAM CONNECTIONS ARE "STANDARD" UNLESS OTHERWISE NOTED ON PLAN.
6. WORKLINES ARE ON CENTERLINES OF BEAMS AND COLUMNS, U.O.N.
7. WELD CAPACITY BASED ON Exx = 70 KSI.
8. CONTRACTOR RESPONSIBLE FOR MEETING ALL O.S.H.A. REQUIREMENTS.

## 1 TYPICAL DETAIL SCHEMATIC SINGLE-PLATE FRAMING CONNECTIONS

NO SCALE

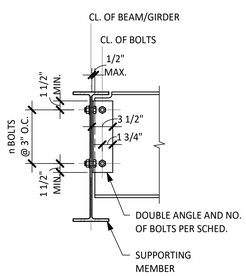


CONNECTION TO SUPPORTED MEMBER

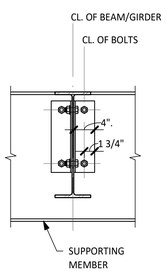


CONNECTION TO SUPPORTING MEMBER

1 ALL BOLTED CONNECTION

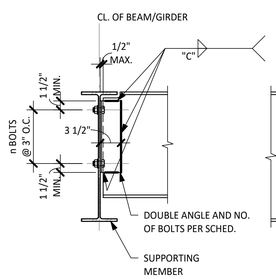


CONNECTION TO SUPPORTED MEMBER

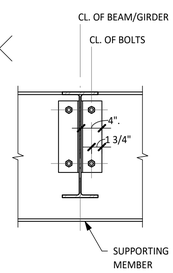


CONNECTION TO SUPPORTING MEMBER

2 BOLTED/WELDED CONNECTION: ANGLES WELDED TO SUPPORTED BEAM

A BEAM TO BEAM CONNECTIONS

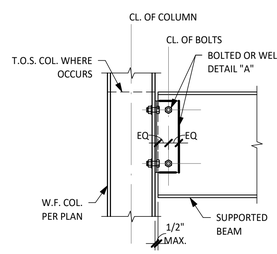


NOTE:

REF. DETAIL "A" FOR INFO NOT SHOWN

B BEAM TO COLUMN FLANGE CONNECTION

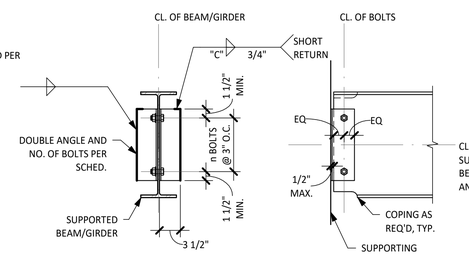


CONNECTION TO SUPPORTING MEMBER

CONNECTION TO SUPPORTED MEMBER

C BOLTED/WELDED DOUBLE ANGLE CONNECTION: ANGLES WELDED TO SUPPORTING MEMBER

STANDARD DOUBLE ANGLE CONNECTION

| BEAM SIZE | NO. OF ROWS OF BOLTS(n) | BOLT DIAMETER | ANGLE THICKNESS | WELD SIZE C | MAX. BEAM REACTION (KIPS) |
|---|---|---|---|---|---|
| W8 | 2 | 3/4" | 1/4" | 1/4" | 12 |
| W10 | 2 | | | | 16 |
| W12 | 3 | | | | 24 |
| W14 | 3 | | | | 30 |
| W16 | 4 | | | | 40 |
| W18 | 5 | | | | 50 |
| W21 | 6 | | | | 73 |
| W24 | 7 | | | | 85 |
| W27 | 8 | 7/8" | 5/16" | 1/4" | 97 |
| W30 | 8 | | | | 97 |
| W33 | 8 | | | | 97 |
| W36 | 10 | | | | 140 |
| W40 | 10 | | | | 140 |
| W44 | 10 | | | | 140 |

D DOUBLE ANGLE CONNECTION SCHEDULE

NOTES:

1. REFERENCE SCHEMATIC DETAILS OF TYPICAL STEEL CONNECTIONS FOR ADD'L INFO.
2. ALL OTHER CONNECTIONS DEVIATING FROM TYPICAL CONNECTIONS SHALL BE DESIGNED AND DETAILED BY A PROFESSIONAL ENGINEER WORKING UNDER THE GUIDANCE OF THE CONTRACTOR. REF. GENERAL NOTES UNDER "STRUCTURAL STEEL CONNECTIONS."
3. NOTED REACTIONS ARE FOR SERVICE LOADS.
4. BOLTS ARE A325N WITH STANDARD HOLES.
5. SCHEDULED SHEAR PLATE CONNECTIONS APPLY TO RIGHT ANGLE CONNECTIONS AND SKEWED CONNECTIONS UP TO 30° FROM RIGHT ANGLE.
6. BEAM CONNECTIONS ARE "STANDARD" UNLESS OTHERWISE NOTED ON PLAN.
7. WORKLINES ARE ON CENTERLINES OF BEAMS AND COLUMNS, U.O.N.
8. WELD CAPACITY BASED ON Exx = 70 KSI.
9. TABLE BASED ON LL4x31/2, A36 STEEL.
10. CONTRACTOR RESPONSIBLE FOR MEETING ALL O.S.H.A. REQUIREMENTS.

## 2 TYPICAL DETAIL SCHEMATIC DOUBLE-ANGLE FRAMING CONNECTIONS

NO SCALE

TEXAS PARKS & WILDLIFE

STATE OF TEXAS
KARINA TRIBBLE
109642
LICENSED
PROFESSIONAL ENGINEER
4/9/21

# SOUTH LLANO RIVER STATE PARK
## HEADQUARTERS BUILDING RENOVATION AND EXPANSION
PROJECT NUMBER: 134245

DATE: 04/09/2021
DESIGNED BY:MN
DRAWN BY:S, EV
REVIEWED BY:KT
REVISED:
REVISED:
REVISED:

100% CONSTRUCTION DOCUMENTS


Architectural Engineers Collaborative
Lamar Central
3800 North Lamar Blvd.
Suite 330
Austin, Tx 78756
P 512.472.2111
www.aecollab.com
FIRM REG.#: F-1985
AEC JOB#: 17012

FORD POWELL &CARSON Architects & Planners, Inc.
Architecture
Planning
Preservation
Interior Design
711 Navarro, Suite 400
San Antonio, Texas 78205
210/226-1246
92706


SHEET TITLE
STEEL TYPICAL DETAILS

SHEET NUMBER
S501

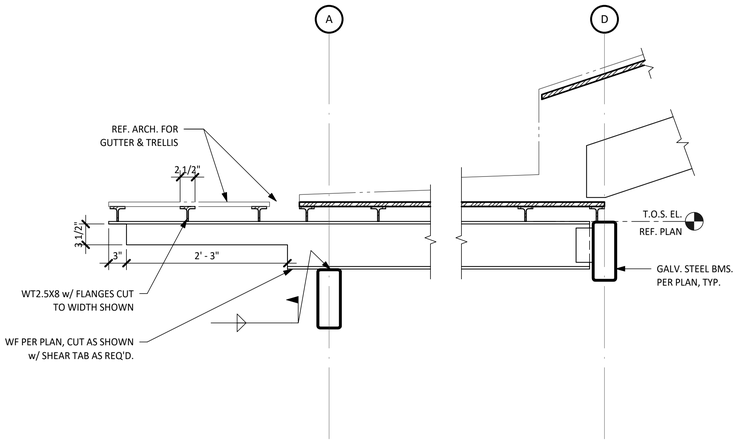


1 DETAIL - TRELLIS OVERALL
SCALE: 1" = 1'-0"

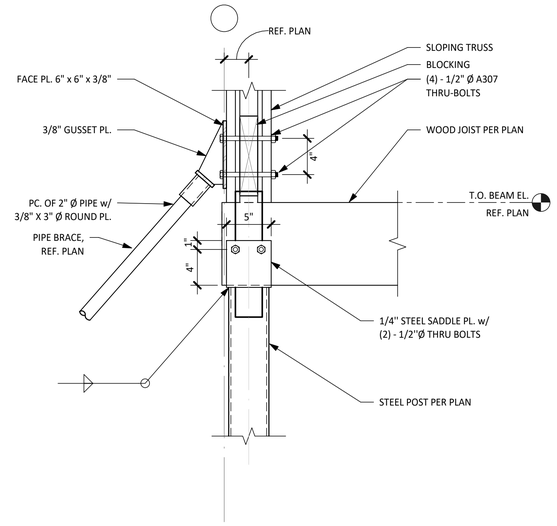


2 DETAIL - STEEL CAP
SCALE: 1 1/2" = 1'-0"

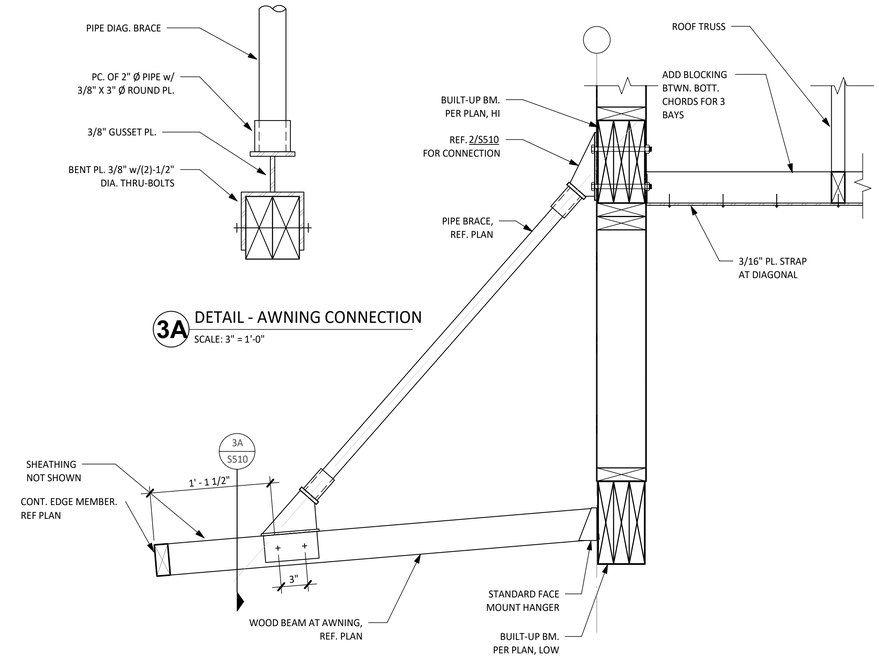


3 SECTION AT AWNING AND BEAM
SCALE: 1 1/2" = 1'-0"

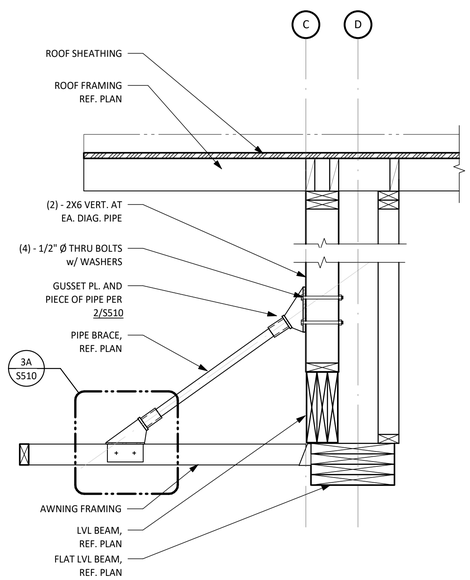


4 DETAIL - FRONT AWNING SUPPORT
SCALE: 1" = 1'-0"

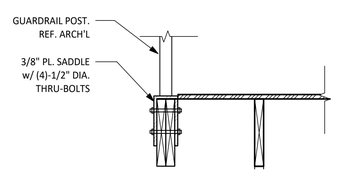


5 DETAIL - GUARDRAIL SUPPORT
SCALE: 1" = 1'-0"

TEXAS PARKS & WILDLIFE

STATE OF TEXAS
KARINA TRIBBLE
109642
LICENSED
PROFESSIONAL ENGINEER
4/9/21

# SOUTH LLANO RIVER STATE PARK
## HEADQUARTERS BUILDING RENOVATION AND EXPANSION
PROJECT NUMBER: 134245

DATE: 04/09/2021
DESIGNED BY: MN
DRAWN BY: S, EV
REVIEWED BY: KT
REVISED:
REVISED:
REVISED:

100% CONSTRUCTION DOCUMENTS

SHEET TITLE
STEEL DETAILS

SHEET NUMBER
S510

Architectural Engineers Collaborative
Lamar Central
3800 North Lamar Blvd.
Suite 330
Austin, Tx 78756
P 512.472.2111
www.aecollab.com
FIRM REG.#: F-1985
AEC JOB#: 17012

FORD POWELL & CARSON
Architects & Planners, Inc.
Architecture
Planning
Preservation
Interior Design
711 Navarro, Suite 400
San Antonio, Texas 78205
210/226-1246
92706

| NAILING SCHEDULE | |
|---|---|
| CONNECTION | NAILING |
| 1. FLOOR JOIST TO BAND JOIST, FACE NAIL | 3-16d |
| 2. FLOOR JOIST TO SILL PLATE OR GIRDER, TOE NAIL | 3-8d |
| 3. BRIDGING TO JOISTS, TOE NAIL OR END NAIL EACH END | 2-8d |
| 4. SILL PLATE TO BAND JOIST OR BLOCKING, FACE NAIL | 16d AT 16" O.C. |
| 5. TOP PLATE TO STUD, END NAIL | 2-16d |
| 6. STUD TO SILL PLATE | 4-8d TOE NAIL OR<br>2-16d EACH END |
| 7. DOUBLE STUDS, FACE NAIL | 16d AT 24" O.C. MAX. |
| 8. DOUBLE TOP PLATES, FACE NAIL | 16d AT 16" O.C. |
| 9. TOP PLATES AND INTERSECTIONS, FACE NAIL | 2-16d OR 3-10d |
| 10. TOP PLATES AND LAPS, FACE NAIL | 8-16d |
| 11. CONTINUOUS HEADER-TWO PIECES | 16d AT 16" O.C.<br>ALONG EACH EDGE |
| 12. CEILING JOISTS TO PLATE, TOE NAIL | 3-8d |
| 13. CEILING JOISTS, LAPS OVER PARTITIONS, FACE NAIL | 3-16d |
| 14. CEILING JOISTS TO PARALLEL RAFTERS, FACE NAIL | 3-16d |
| 15. RAFTER TO PLATE, TOE NAIL | 3-8d |
| 16. 3/4" LET-IN BRACE TO EACH STUD AND PLATES, FACE NAIL | 2-8d |
| 17. BUILT-UP CORNER STUDS | 16d AT 24" O.C. |
| 18. BUILT-UP GIRDER AND BEAMS, THREE MEMBERS | 20d AT 32" O.C. AT TOP<br>AND BOTTOM (STAGGERED)<br>2-20d AT ENDS |

NOTES:
1. PROVIDE NAILING CONNECTIONS INDICATED IN SCHEDULE(S) UNLESS DETAILED OR NOTED OTHERWISE.

WOOD CONSTRUCTION CONNECTOR NOTES:

1. ALL WOOD CONSTRUCTION CONNECTORS SHOWN ARE SIMPSON STRONG-TIE CONNECTORS MANUFACTURED BY SIMPSON STRONG-TIE COMPANY, INC. (OR APPROVED EQUIVALENT). BEFORE SUBSTITUTING ANOTHER BRAND, CONFIRM LOAD CAPACITY BASED ON RELIABLE PUBLISHED TESTING DATA OR CALCULATIONS AND SUBMIT TO ARCHITECTURAL ENGINEERS COLLABORATIVE, PLLP.
2. ALL SPECIFIED FASTENERS SHALL BE INSTALLED ACCORDING TO THE DETAILS AND THE MANUFACTURER'S INSTRUCTIONS. ALL HOLES IN CONNECTORS SHALL BE PROPERLY NAILED TO THE WOOD STRUCTURE. CONTACT ARCHITECTURAL ENGINEERS COLLABORATIVE FOR FASTENERS NOT SHOWN. INCORRECT FASTENER QUANTITY, SIZE, TYPE, MATERIAL, OR FINISH MAY CAUSE THE CONNECTION TO FAIL.
3. BOLT HOLES SHALL BE A MINIMUM OF 1/32" AND A MAXIMUM OF 1/16" LARGER THAT THE BOLT DIAMETER.
4. INSTALL ALL SPECIFIED FASTENERS BEFORE LOADING THE CONNECTION.
5. USE PROPER SAFETY EQUIPMENT.
6. WELDING GALVANIZED STEEL MAY PRODUCE HARMFUL FUMES; FOLLOW PROPER WELDING PROCEDURES AND SAFETY PRECAUTIONS. WELDING SHOULD BE IN ACCORDANCE WITH AWS STANDARDS.
7. PNEUMATIC OR POWDER-ACTUATED FASTENERS MAY DEFLECT AND INJURE THE OPERATOR OR OTHERS. NAIL GUNS MAY BE USED TO INSTALL CONNECTORS, PROVIDED THE CORRECT QUANTITY AND TYPE OF NAILS ARE PROPERLY INSTALLED IN THE NAIL HOLES. GUNS WITH NAIL HOLE-LOCATING MECHANISMS SHOULD BE USED. FOLLOW THE MANUFACTURER'S INSTRUCTIONS AND USE THE APPROPRIATE SAFETY EQUIPMENT.
8. UNLESS OTHERWISE NOTED, BOLTS AND NAILS SHALL NOT BE COMBINED.
9. 8d, 10d, 12d, 16d AND 20d SPECIFY COMMON NAILS AND MAY NOT BE REPLACED WITH BOX OR SINKER NAILS UNLESS OTHERWISE SPECIFIED.
10. BOLTS SHALL BE ASTM A307, GRADE A OR BETTER.
11. UNLESS OTHERWISE NOTED, BENDING STEEL IN THE FIELD MAY CAUSE FRACTURES AT THE BEND LINE. FRACTURED STEEL WILL NOT CARRY LOAD AND MUST BE REPLACED.
12. A FASTENER THAT SPLITS THE WOOD WILL NOT SUPPORT THE DESIGN LOAD. IF THE WOOD HAS A TENDENCY TO SPLIT, PRE-BORE HOLES TO 3/4 OF THE NAIL DIAMETER PER THE NDS.

TYPICAL DETAIL
1 NAILING SCHEDULE
NO SCALE

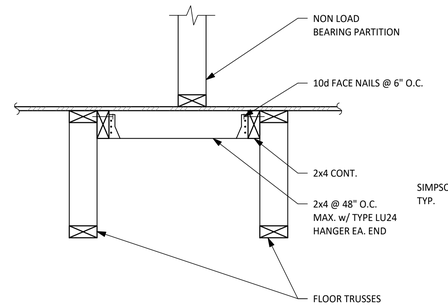


NOTES:
1. PROVIDE ADD'L SUPPORT FRAMING WHEN PARTITION LENGTH > 4'-0".

TYPICAL DETAIL
2 NON-LOAD-BEARING PARTITION PARALLEL TO TRUSSES SUPPORT
NO SCALE

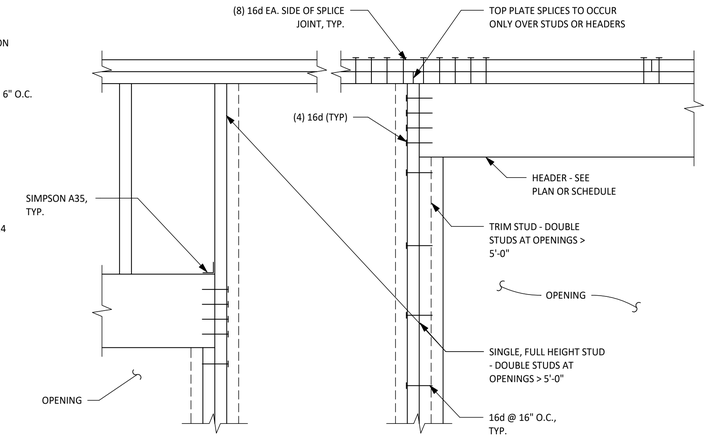


TYPICAL DETAIL
3 WALL FRAMING AT OPENING
NO SCALE

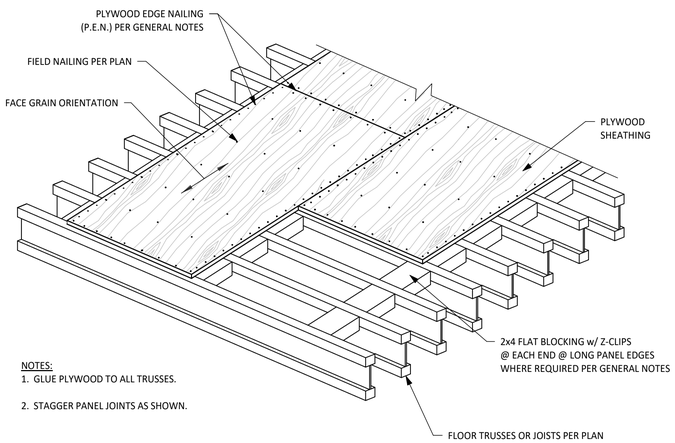


NOTES:
1. GLUE PLYWOOD TO ALL TRUSSES.
2. STAGGER PANEL JOINTS AS SHOWN.

TYPICAL DETAIL
4 FLOOR DIAPHRAGM NAILING WITH BLOCKING
NO SCALE

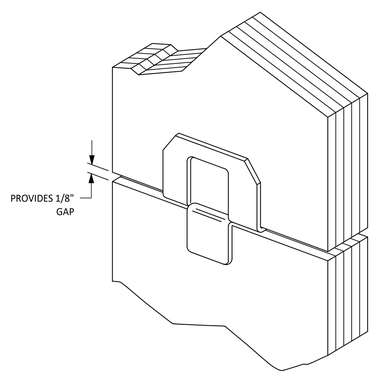


INSTALL 2 EQ. SPC. BETWEEN TRUSSES;
USE CLIPS FOR UNBLOCKED DIAPHRAGMS IF
NO TONGUE AND GROOVE IN PLYWOOD IS
SPECIFIED.

TYPICAL DETAIL
5 SIMPSON STRONG-TIE PSCL
NO SCALE

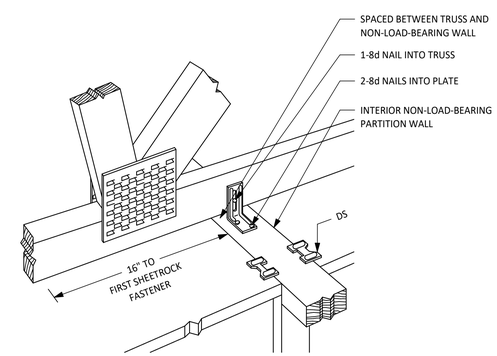


TYPICAL DETAIL
6 SIMPSON STRONG-TIE STCT AT INTERIOR NON-LOAD-BEARING WALLS
NO SCALE


Architectural Engineers Collaborative
Lamar Central
3800 North Lamar Blvd.
Suite 330
Austin, Tx 78756
P 512.472.2111
www.aecollab.com
FIRM REG.#: F-1985
AEC JOB#: 17012

FORD POWELL &CARSON
Architects & Planners, Inc.
Architecture
Planning
Preservation
Interior Design
711 Navarro, Suite 400
San Antonio, Texas 78205
210/226-1246
92706


TEXAS PARKS & WILDLIFE

STATE OF TEXAS
KARINA TRIBBLE
109642
LICENSED
PROFESSIONAL ENGINEER
4/9/21

# SOUTH LLANO RIVER STATE PARK
## HEADQUARTERS BUILDING RENOVATION AND EXPANSION
PROJECT NUMBER: 134245

DATE: 04/09/2021
DESIGNED BY: MN
DRAWN BY: S, EV
REVIEWED BY: KT
REVISED:
REVISED:
REVISED:

SHEET TITLE
WOOD TYPICAL DETAILS

SHEET NUMBER
S600

100% CONSTRUCTION DOCUMENTS

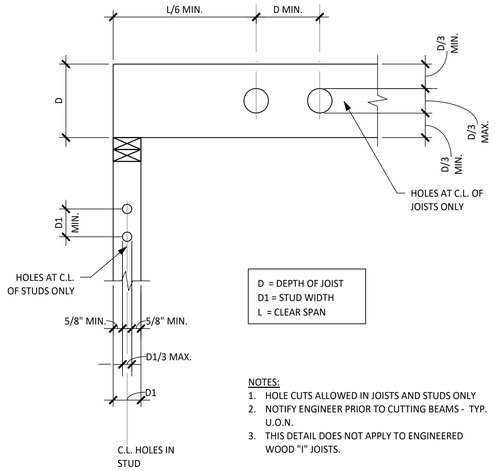


NOTES:
1. HOLE CUTS ALLOWED IN JOISTS AND STUDS ONLY
2. NOTIFY ENGINEER PRIOR TO CUTTING BEAMS - TYP. U.O.N.
3. THIS DETAIL DOES NOT APPLY TO ENGINEERED WOOD "I" JOISTS.

## 1 TYPICAL DETAIL HOLES IN WOOD
NO SCALE

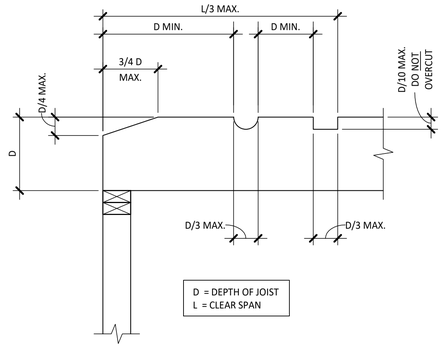


1. NOTCH CUTS ALLOWED IN TOP OF JOISTS ONLY
2. NOTIFY ENGINEER PRIOR TO CUTTING BEAMS - TYP. U.O.N.
3. THIS DETAIL DOES NOT APPLY TO ENGINEERED WOOD "I" JOISTS.

## 2 TYPICAL DETAIL NOTCHES IN WOOD
NO SCALE

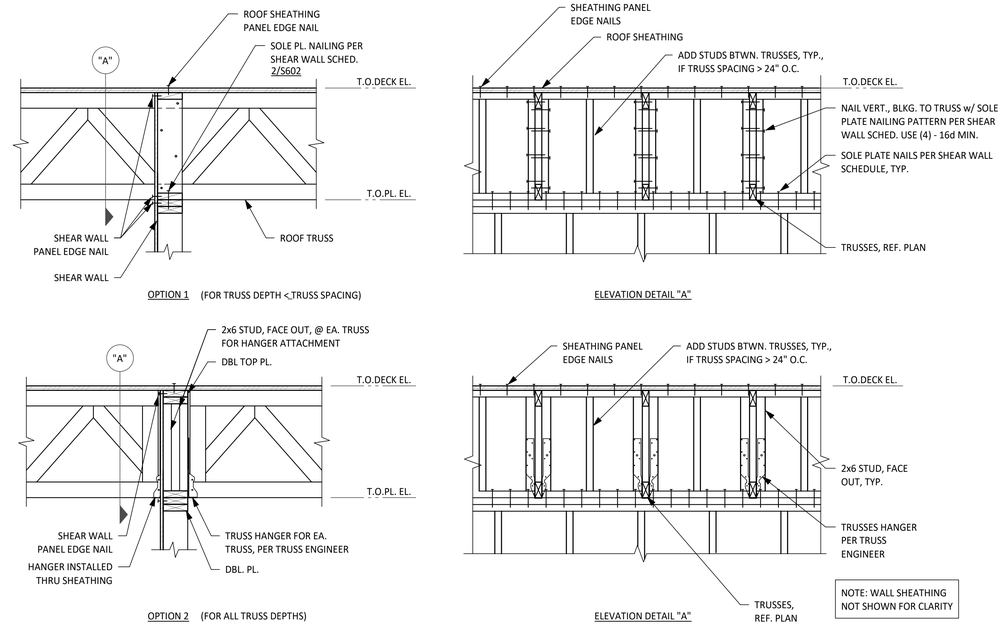


## 3 TYPICAL DETAIL INTERIOR SHEAR WALL CONNECTION @ ROOF
NO SCALE

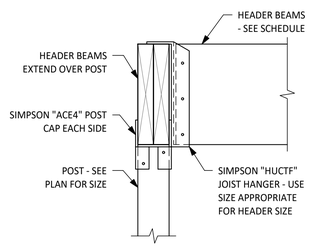


## 4 TYPICAL DETAIL POST CAP
NO SCALE

**HEADER BEAM SCHEDULE**

| OPENING | HEADER SIZE | SILL SIZE |
|---|---|---|
| UP TO 4'-0" | (3) - 2x8 | (1) - 2x6 |
| >4'-0" TO 6'-0" | (3) - 2x10 | (1) - 2x6 |
| >6'-0" TO 8'-0" | (3) - 2x12 | (2) - 2x6 |
| >8'-0" TO 10'-0" | (3) - 1 3/4"x11 7/8" LVL | (3) - 2x6 |
| >10'-0" TO 12'-0" | (3) - 1 3/4"x11 7/8" LVL | (3) - 1 3/4"x5 1/2" LVL |

NOTE:
1. PROVIDE HEADER BEAM SHOWN IN THE SCHEDULE U.O.N. ON PLAN
2. ALL SOLID SAWN HEADER BEAMS SHALL BE NO.1 SOUTHERN YELLOW PINE OR DOUGLAS FIR-LARCH.

## 5 TYPICAL DETAIL HEADER BEAM SCHEDULE
NO SCALE

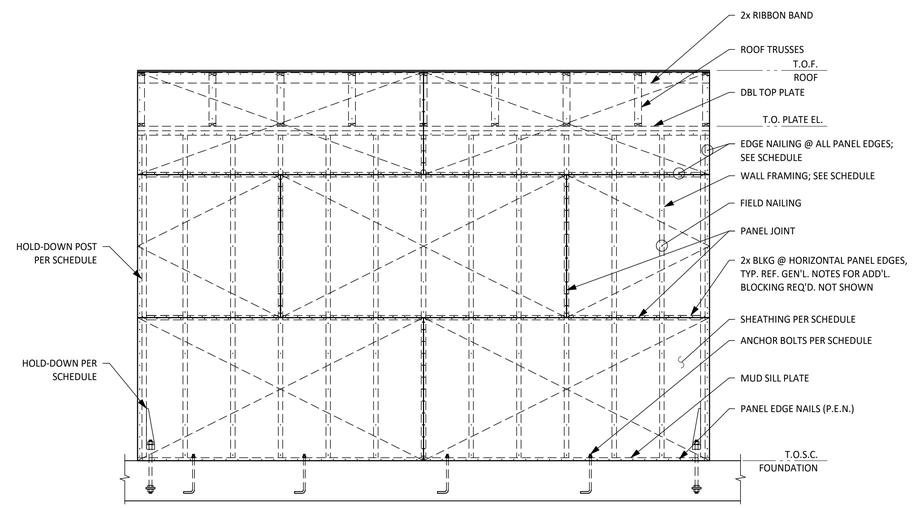


## 6 TYPICAL DETAIL SHEARWALL ELEVATION
NO SCALE

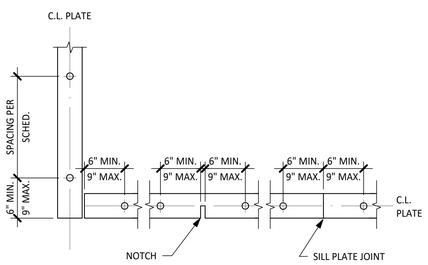


NOTES:
1. BOLTS SHOWN SHALL BE IN ADDITION TO ANY HOLD-DOWN ANCHORS FOR SHEAR WALLS.
2. PROVIDE MINIMUM OF (2) BOLTS PER PLATE SEGMENT
3. REF. DETAIL 2/S602 FOR ANCHOR TYPE AND SPACING AT SHEAR WALLS.

| SILL PLATE ATTACHMENT TO FOUNDATION | | |
|---|---|---|
| LOAD BEARING WOOD WALL | EXTERIOR* | Sill plates to be anchored to the foundation with Simpson Strong-Tie MASA Mudsill Anchors placed at 3'-6" on center, maximum. Alternatively, sill plates can be bolted to the foundation with 1/2" "L" anchor bolts with a minimum embedment of 6" placed at 3'-6" on center, maximum. |
| | INTERIOR* | Sill plates to be anchored to the foundation with powder actuated fasteners. Provide washers at least 0.08 inches thick, and 1.1 inches square or 1.425 inches in diameter at each fastener. Fasteners shall be 2 13/16 inches long and shall have a minimum shank diameter of 0.157 inches. Provide 2 fasteners 6 and 10 inches from the end of each sill plate piece, and then at a maximum spacing of 18 inches on center. Fasteners shall be Hilti X-U P8 pins or equal. |
| NON-LOAD BEARING WOOD WALL | EXTERIOR | Sill plates shall be anchored to the foundation in the same manner as exterior, load bearing wood walls. |
| | INTERIOR | Sill plates shall be anchored to the foundation in the same manner as interior, load bearing wood walls, but spacing can be 36 inches on center, maximum. |

* NOTE: THESE DO NOT APPLY TO SHEAR WALLS. REF. 2/S602 FOR SILL ATTACHMENT AT SHEAR WALLS.

## 7 TYPICAL DETAIL SILL PLATE ANCHOR BOLT LAYOUT
NO SCALE

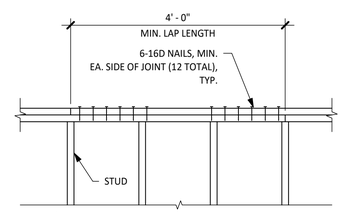


## 8 TYPICAL DETAIL DOUBLE TOP PLATE SPLICE NAILING
NO SCALE


Architectural Engineers Collaborative
Lamar Central
3800 North Lamar Blvd.
Suite 330
Austin, Tx 78756
P 512.472.2111
www.aecollab.com
FIRM REG.#: F-1985
AEC JOB#: 17012

FORD POWELL &CARSON Architects & Planners, Inc.
711 Navarro, Suite 400
San Antonio, Texas 78205
210/226-1246
92706
Architecture
Planning
Preservation
Interior Design


TEXAS PARKS & WILDLIFE

STATE OF TEXAS
KARINA TRIBBLE
109642
LICENSED
PROFESSIONAL ENGINEER
4/9/21

# SOUTH LLANO RIVER STATE PARK
## HEADQUARTERS BUILDING RENOVATION AND EXPANSION
PROJECT NUMBER: 134245

DATE: 04/09/2021
DESIGNED BY:MN
DRAWN BY:S. EV
REVIEWED BY:KT
REVISED:
REVISED:
REVISED:

SHEET TITLE
WOOD TYPICAL DETAILS

SHEET NUMBER
S601

100% CONSTRUCTION DOCUMENTS

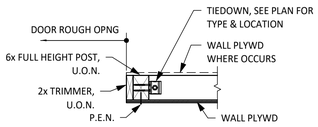


DOOR OPENING - PLAN VIEW

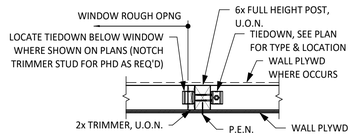


WINDOW OPENING - PLAN VIEW

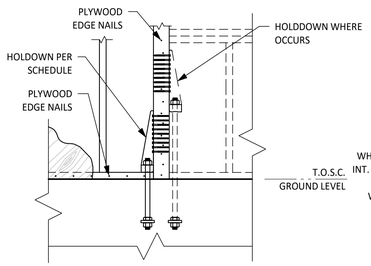


END OF SHEAR WALL - ELEVATION

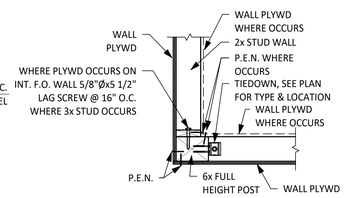


OUTSIDE CORNER - PLAN VIEW

| MARK | HOLDOWN TYPE | HOLDOWN ANCHOR BOLT | POST | CAPACITY (LBS) |
|---|---|---|---|---|
| H-1 | HDU2-SDS2.5 | 5/8"Ø THRD. ROD W/ 3"x3"x1/4" PL WASHER | 4X6 | 3075 |
| H-2 | HDU5-SDS2.5 | 5/8"Ø THRD. ROD W/ 3"x3"x1/4" PL WASHER | 4X6 | 5645 |
| H-3 | HDU8-SDS2.5 | 7/8"Ø THRD. ROD W/ 3"x3"x1/4" PL WASHER | 4X6 | 6970 |
| H-4 | HDU11-SDS2.5 | 1"Ø THRD. ROD W/ 3 1/2"x3 1/2"x1/4" PL WASHER | 6X6 | 9335 |

NOTE: SCHEDULED HOLDOWNS ARE PRE-DEFLECTED STEEL HOLDOWN ANCHORS BY "SIMPSON STRONG-TIE."

## 1 TYPICAL DETAIL
## SHEARWALL HOLDOWN SCHEDULE

NO SCALE

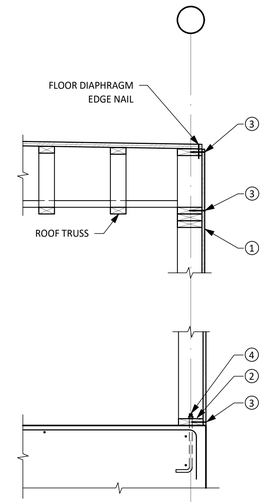


CONDITION B: TRUSSES PARALLEL TO EXTERIOR SHEAR WALL

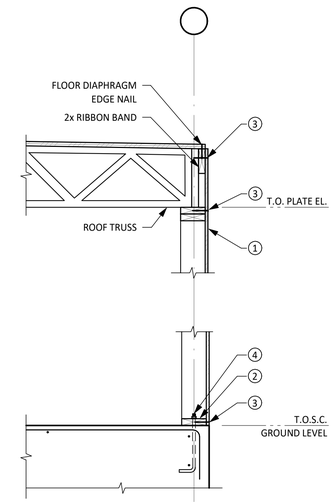


CONDITION A: TRUSSES PERPENDICULAR TO EXTERIOR SHEAR WALL

| SHEAR WALL SCHEDULE | | | | |
|---|---|---|---|---|
| MARK | SHEATHING ① | WALL FRAMING ② | EDGE NAILING (P.E.N.) ③ | ANCHOR BOLTS (A.B.) W/ WASHERS ④ |
| SW-1 | 1/2" APA RATED CDX | 2x STUDS 2X MUDSILL | 10d @ 6" O.C. | 5/8"Øx12" @ 32" O.C. OR "MASA" ANCHOR @ 24" O.C. |
| SW-2 | 1/2" APA RATED CDX | 2x STUDS 2X MUDSILL | 10d @ 4" O.C. | 5/8"Øx12" @ 24" O.C. OR "MASA" ANCHOR @ 18" O.C. |
| SW-3 | 1/2" APA RATED CDX | 2x STUDS, 2X MUDSILL 3X MEMBERS AT ALL PANEL EDGES | 10d @ 3" O.C. | 7/8"Øx12" @ 32" O.C. OR "MASA" ANCHOR @ 18" O.C. |
| SW-4 | 1/2" APA RATED CDX | 2x STUDS, 2X MUDSILL 3X MEMBERS AT ALL PANEL EDGES | 10d @ 2" O.C. | 7/8"Øx12" @ 32" O.C. OR "MASA" ANCHOR @ 18" O.C. |

NOTES:

1. PRIOR TO CONSTRUCTION OF SHEARWALLS, REVIEW LATEST DIMENSIONED ARCHITECTURAL DRAWINGS AND NOTIFY STRUCTURAL ENGINEER OF ANY LOCATIONS WHERE MINIMUM SHEARWALL LENGTHS ARE NOT MET. MINIMUM LENGTHS BASED ON OUT TO OUT FACE OF TIEDOWN POSTS.
2. ALL SHEAR WALL PANEL NAILS TO BE 10d COMMON 2 1/8" LENGTH SMOOTH SHANK PLYWOOD NAILS, TYP. U.O.N.
3. FIELD NAILING TO BE 10d @ 12" O.C. @ SHEARWALL PLYWOOD PANELS, TYP.
4. SEE PLANS FOR SHEARWALL TIE DOWNS, SIZES AND LOCATIONS.
5. PLACE SHEATHING ON SIDE OF WALL WHERE SHEARWALL SYMBOL OCCURS.
6. HORIZONTAL PLYWOOD SPLICES TO OCCUR AT RIBBON BAND. WHERE WALL HEIGHT DICTATES HORIZONTAL SPLICE AT WALL, PROVIDE 3x BLOCKING. DO NOT SPLICE AT DOUBLE 2x TOP PLATE.
7. USE 2x STUDS, DOUBLE TOP PLATE AND SOLE PLATE, U.N.O.
8. SEE DETAIL FOR TYPICAL SHEARWALL DETAIL AT INTERSECTING PARTITION WALL.
9. SHEATHING THICKNESS IS NOMINAL, ACTUAL THICKNESS EQUIVALENTS ARE 1/2"=15/32"; 5/8"=19/32"; 3/4"=23/32"
10. WALL SECTIONS ABOVE ARE DIAGRAMS, SEE DETAILS FOR INFO. NOT SHOWN.
11. RETIGHTEN ALL ANCHOR BOLTS PRIOR TO CLOSE-IN.
12. "MASA" MUDSILL ANCHOR TO BE INSTALLED WITH STANDARD INSTALLATION ONLY (NO LEGS UP).

## 2 TYPICAL DETAIL
## SHEARWALL SCHEDULE

NO SCALE

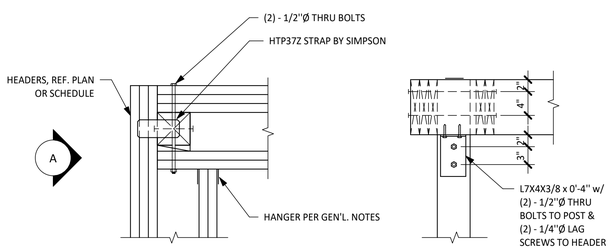


PLAN DETAIL

ELEVATION "A"

## 3 TYPICAL DETAIL
## DOUBLE HEADER CONNX.

NO SCALE

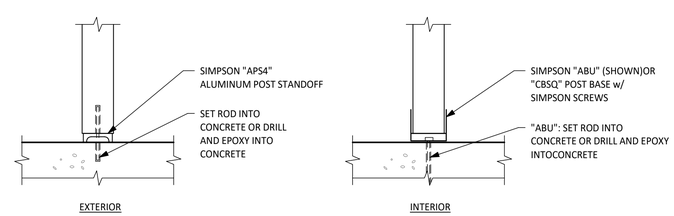


EXTERIOR

INTERIOR

## 4 TYPICAL DETAIL
## POST BASE

NO SCALE

TEXAS PARKS & WILDLIFE

STATE OF TEXAS
KARINA TRIBBLE
109642
LICENSED
PROFESSIONAL ENGINEER
4/9/21

# SOUTH LLANO RIVER STATE PARK
## HEADQUARTERS BUILDING RENOVATION AND EXPANSION
PROJECT NUMBER: 134245

DATE: 04/09/2021
DESIGNED BY: MN
DRAWN BY: S. EV
REVIEWED BY: KT
REVISED:
REVISED:
REVISED:


Architectural Engineers Collaborative
Lamar Central
3800 North Lamar Blvd.
Suite 330
Austin, Tx 78756
P 512.472.2111
www.aecollab.com
FIRM REG.#: F-1985
AEC JOB#: 17012

FORD POWELL & CARSON
Architects & Planners, Inc.
Architecture
Planning
Preservation
Interior Design
711 Navarro, Suite 400
San Antonio, Texas 78205
210/226-1246
92706


SHEET TITLE
WOOD TYPICAL DETAILS

SHEET NUMBER
S602

100% CONSTRUCTION DOCUMENTS

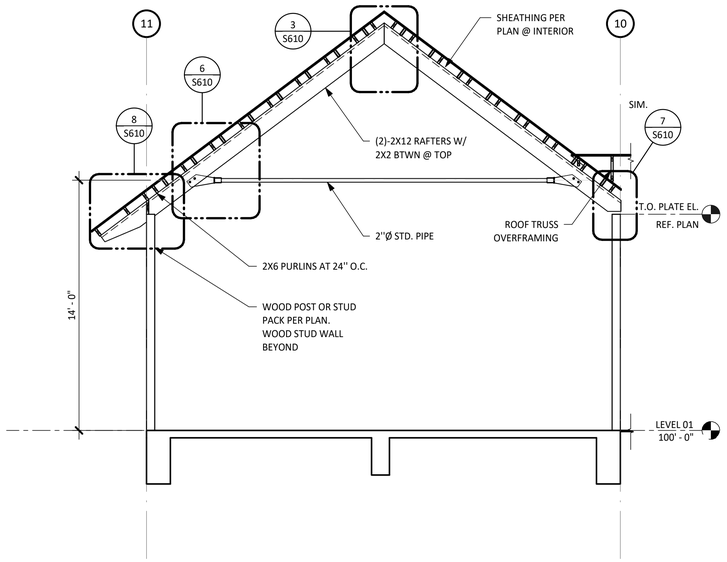


1 ELEVATION - CUSTOM TRUSS
SCALE: 1/4" = 1'-0"

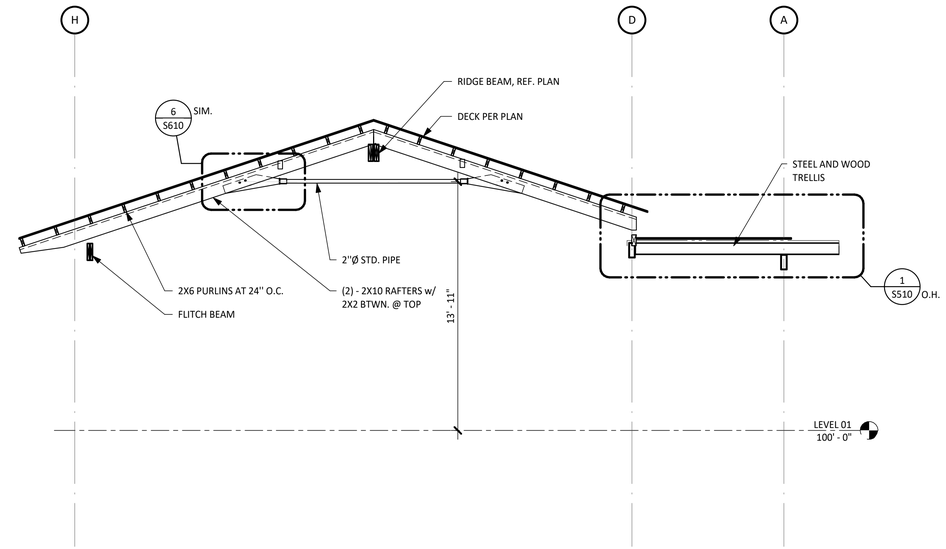


2 ELEVATION - CUSTOM TRUSS
SCALE: 1/4" = 1'-0"

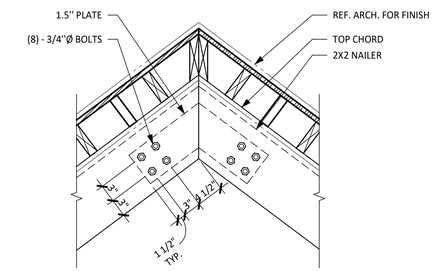


3 DETAIL - CUSTOM TRUSS RIDGE
SCALE: 1" = 1'-0"

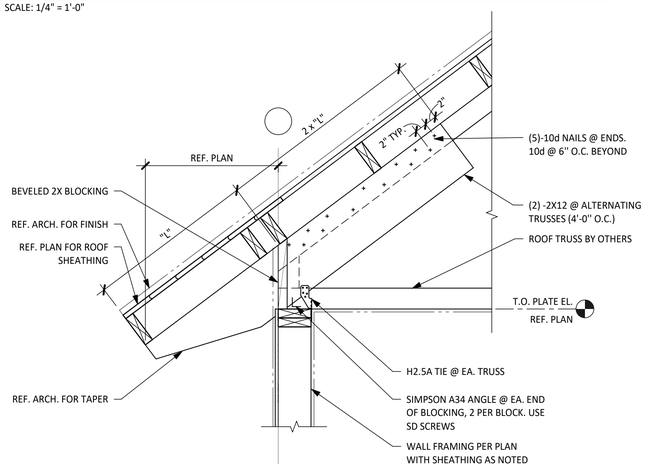


4 SECTION - PRE-FAB TRUSS @ T.O. WALL
SCALE: 1" = 1'-0"

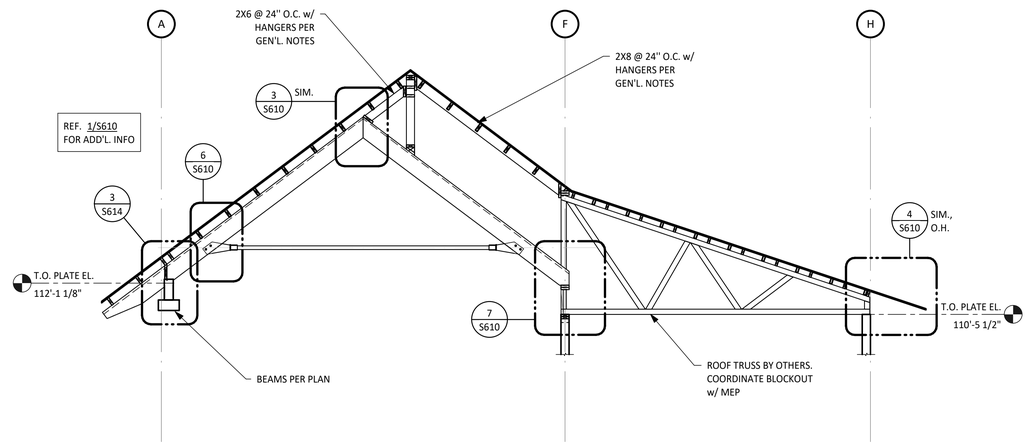


5 ELEVATION - CUSTOM TRUSS
SCALE: 1/4" = 1'-0"

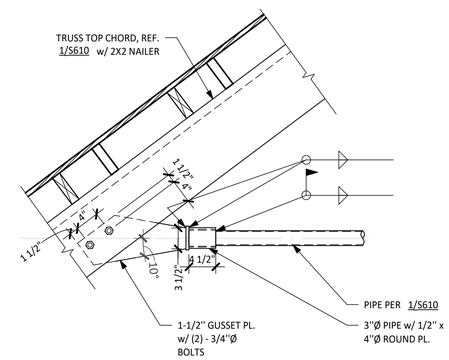


6 DETAIL - TRUSS CONNECTION
SCALE: 1" = 1'-0"

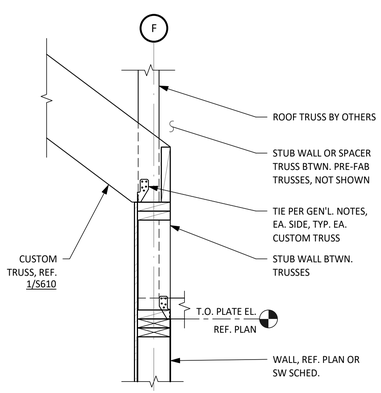


7 SECTION - TRUSS SUPPORT
SCALE: 1" = 1'-0"

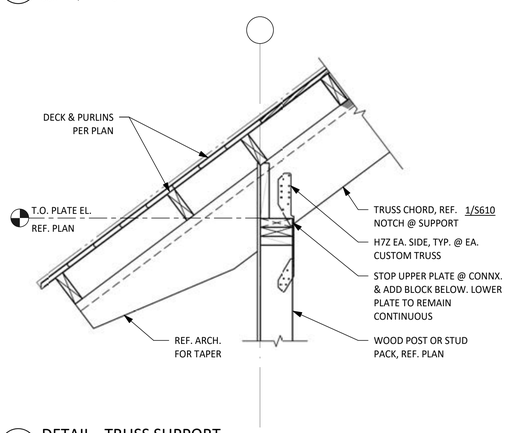


8 DETAIL - TRUSS SUPPORT
SCALE: 1" = 1'-0"

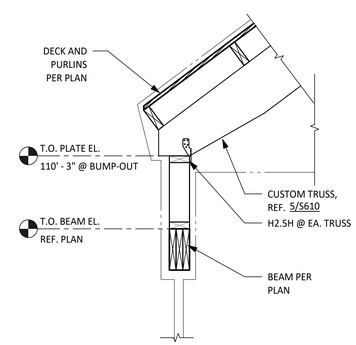


9 SECTION - AT DRIVE-THRU WINDOW
SCALE: 3/4" = 1'-0"

TEXAS PARKS & WILDLIFE

STATE OF TEXAS
KARINA TRIBBLE
109642
LICENSED
PROFESSIONAL ENGINEER
4/9/21

# SOUTH LLANO RIVER STATE PARK
## HEADQUARTERS BUILDING RENOVATION AND EXPANSION
PROJECT NUMBER: 134245

DATE: 04/09/2021
DESIGNED BY:MN
DRAWN BY:S, EV
REVIEWED BY:KT
REVISED:
REVISED:
REVISED:

**SHEET TITLE**
WOOD DETAILS

SHEET NUMBER
S610

100% CONSTRUCTION DOCUMENTS


Architectural Engineers Collaborative
Lamar Central
3800 North Lamar Blvd.
Suite 330
Austin, Tx 78756
P 512.472.2111
www.aecollab.com
FIRM REG.#: F-1985
AEC JOB#: 17012

FORD POWELL &CARSON
Architects & Planners, Inc.
Architecture
Planning
Preservation
Interior Design
711 Navarro, Suite 400
San Antonio, Texas 78205
210/226-1246
92706

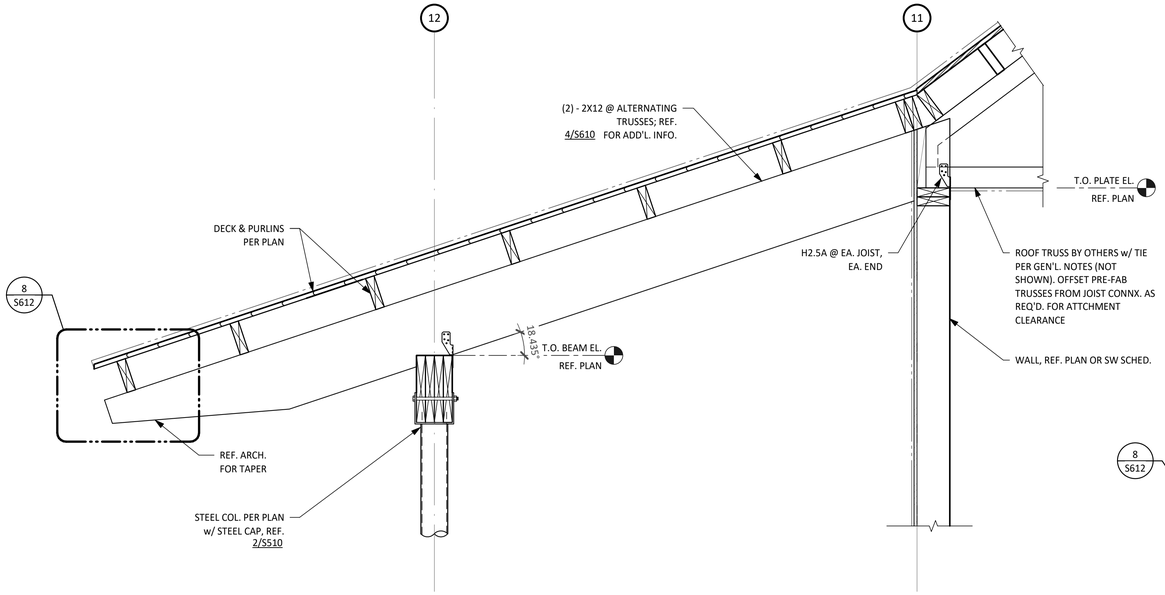


1 SECTION - CHANGE IN ROOF SLOPE
SCALE: 1" = 1'-0"

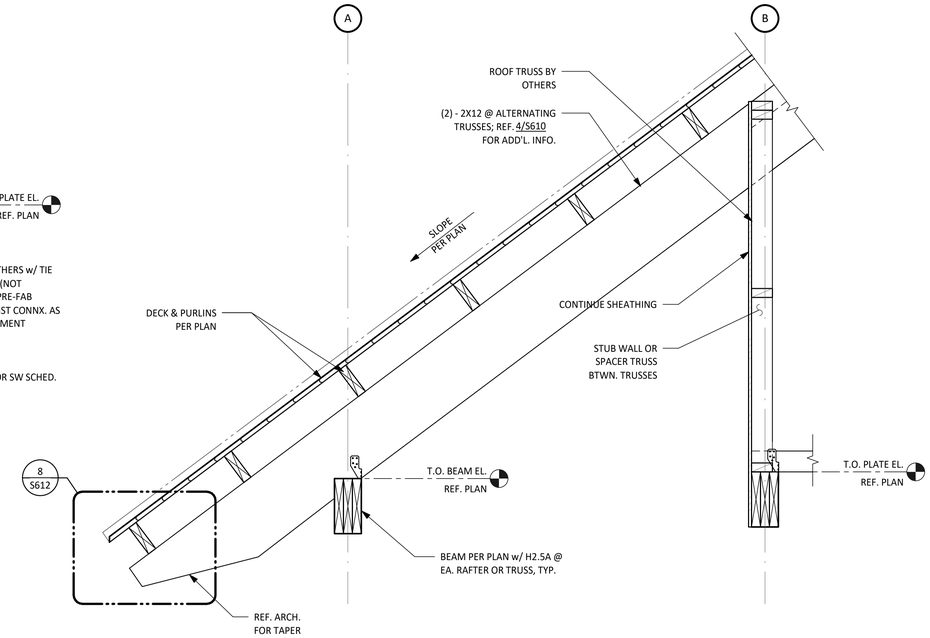


2 SECTION - WEST END
SCALE: 1" = 1'-0"

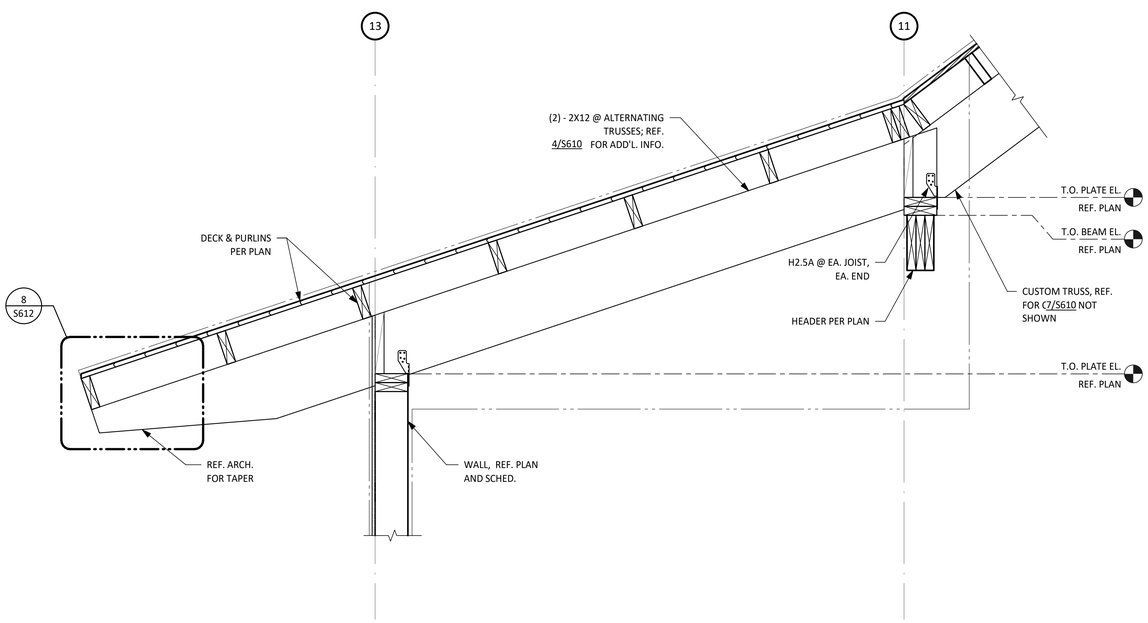


3 SECTION - CHANGE IN ROOF SLOPE
SCALE: 1" = 1'-0"

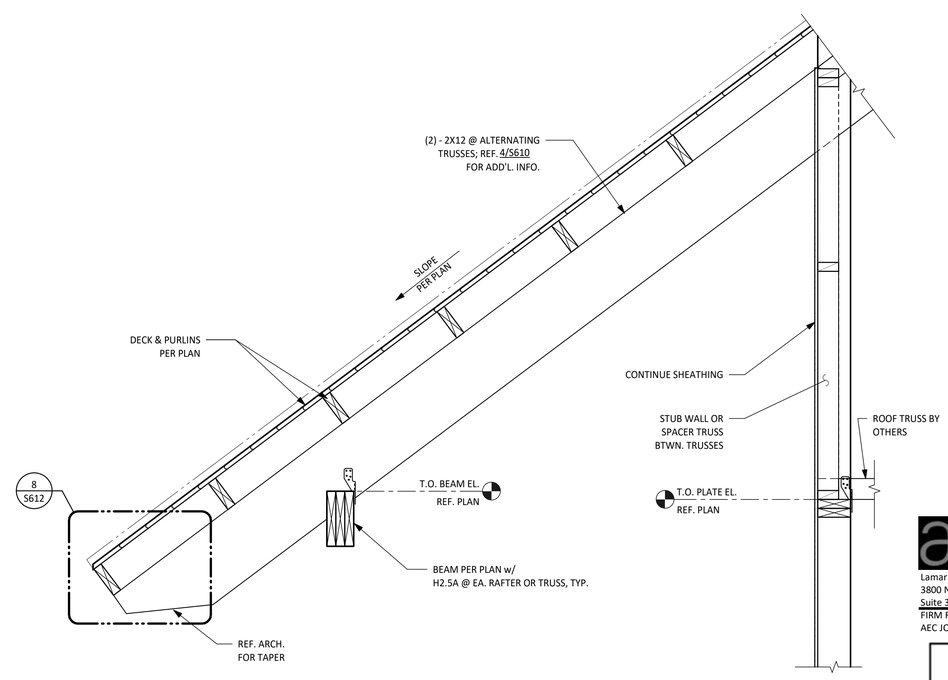


4 SECTION - RAFTERS ON EXPOSED GIRDER
SCALE: 1" = 1'-0"

TEXAS PARKS & WILDLIFE

STATE OF TEXAS
KARINA TRIBBLE
109642
LICENSED
PROFESSIONAL ENGINEER
4/9/21

# SOUTH LLANO RIVER STATE PARK
## HEADQUARTERS BUILDING RENOVATION AND EXPANSION
PROJECT NUMBER: 134245

DATE: 04/09/2021
DESIGNED BY:MN
DRAWN BY:S, EV
REVIEWED BY:KT
REVISED:
REVISED:
REVISED:

100% CONSTRUCTION DOCUMENTS


Architectural Engineers Collaborative
Lamar Central
3800 North Lamar Blvd.
Suite 330
Austin, Tx 78756
P 512.472.2111
www.aecollab.com
FIRM REG.#: F-1985
AEC JOB#: 17012

FORD POWELL &CARSON
Architects & Planners, Inc.
Architecture
Planning
Preservation
Interior Design
711 Navarro, Suite 400
San Antonio, Texas 78205
210/226-1246
92706


SHEET TITLE
WOOD DETAILS

SHEET NUMBER
S611

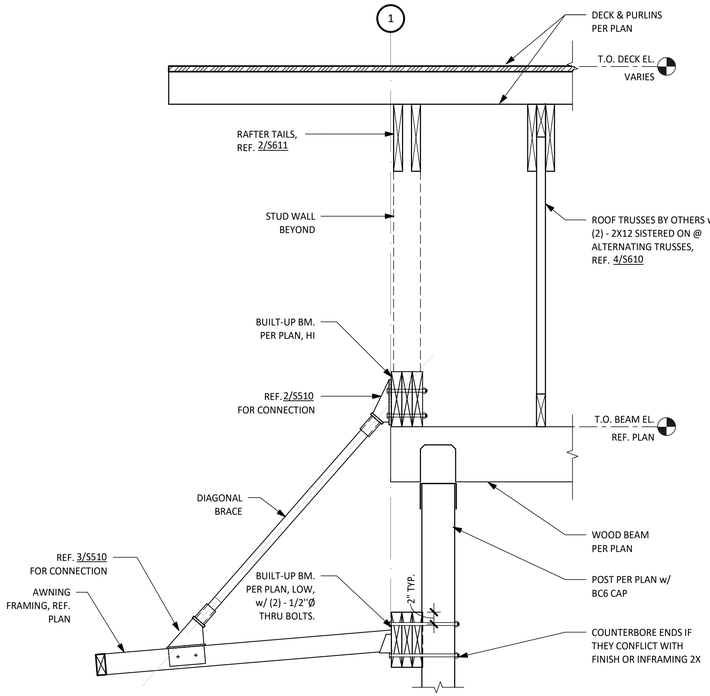


1 SECTION - PERIMETER
SCALE: 1" = 1'-0"

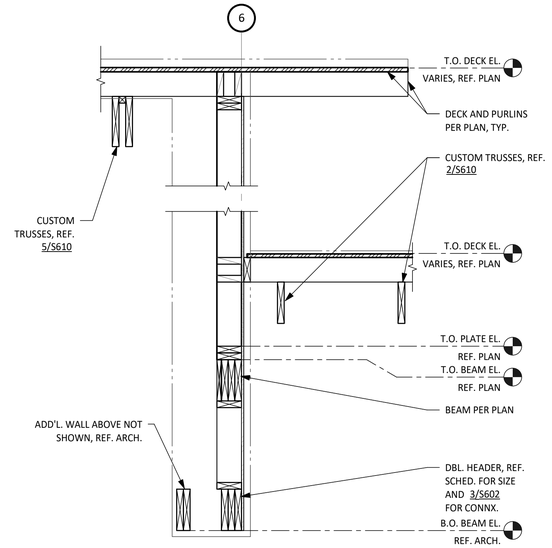


2 SECTION - HIGH/LOW ROOF
SCALE: 3/4" = 1'-0"

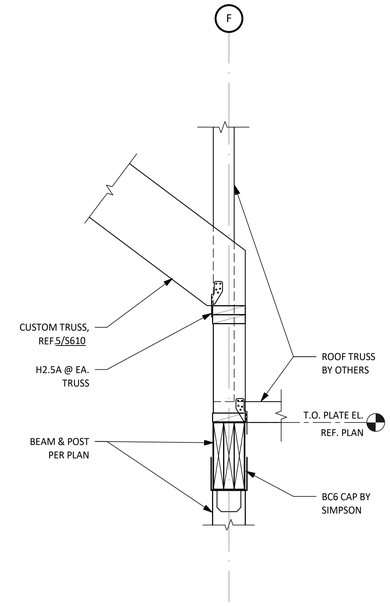


3 DETAIL - INTERIOR BEAM TO COLUMN CONNX.
SCALE: 1" = 1'-0"

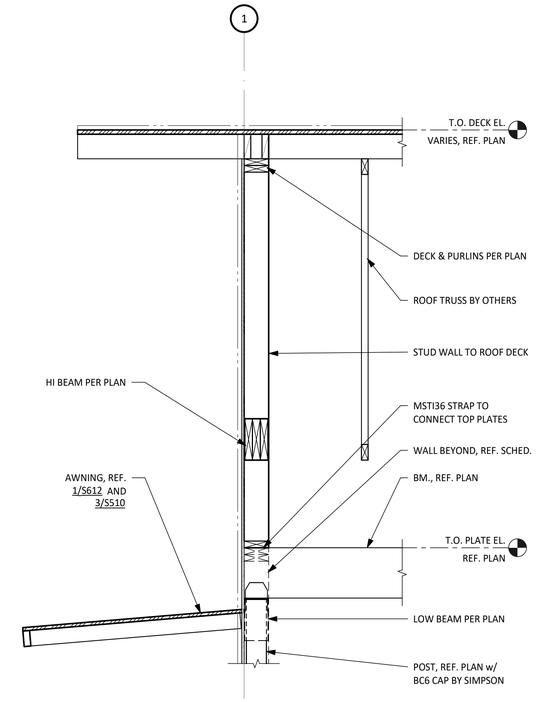


4 SECTION - PERIMETER
SCALE: 3/4" = 1'-0"

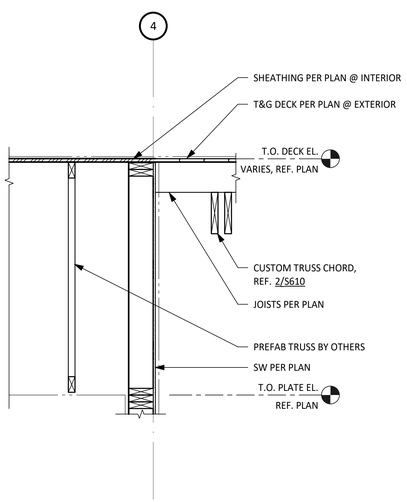


5 SECTION - INTERIOR-EXTERIOR
SCALE: 3/4" = 1'-0"

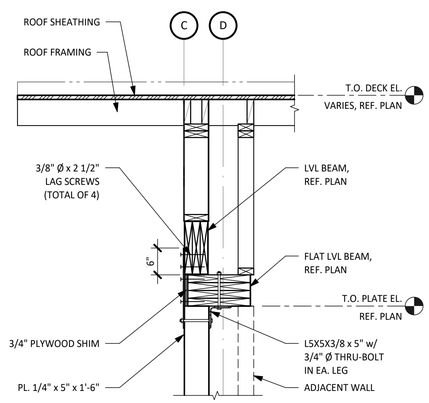


6 DETAIL - BEAM SUPPORT AT WOOD COLUMN
SCALE: 3/4" = 1'-0"

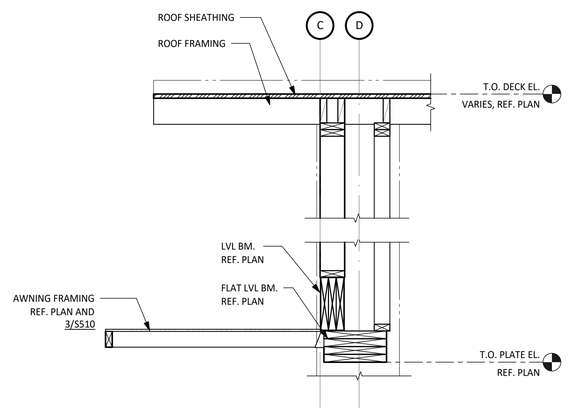


7 DETAIL - AWNING AT FRONT FACADE
SCALE: 3/4" = 1'-0"

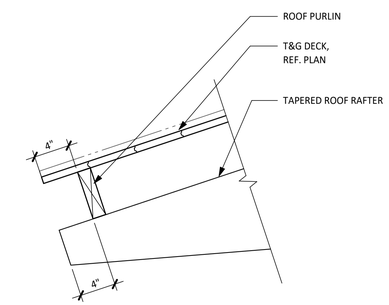


8 DETAIL - END OF RAFTER
SCALE: 1 1/2" = 1'-0"

TEXAS PARKS & WILDLIFE

STATE OF TEXAS
KARINA TRIBBLE
109642
LICENSED
PROFESSIONAL ENGINEER
4/9/21

# SOUTH LLANO RIVER STATE PARK
## HEADQUARTERS BUILDING RENOVATION AND EXPANSION
PROJECT NUMBER: 134245

DATE: 04/09/2021
DESIGNED BY: MN
DRAWN BY: S, EV
REVIEWED BY: KT
REVISED:
REVISED:
REVISED:

100% CONSTRUCTION DOCUMENTS


Architectural Engineers Collaborative
Lamar Central
3800 North Lamar Blvd.
Suite 330
Austin, Tx 78756
P 512.472.2111
www.aecollab.com
FIRM REG.#: F-1985
AEC JOB#: 17012

FORD POWELL & CARSON
Architects & Planners, Inc.
Architecture
Planning
Preservation
Interior Design
711 Navarro, Suite 400
San Antonio, Texas 78205
210/226-1246
92706


SHEET TITLE
WOOD DETAILS

SHEET NUMBER
S612

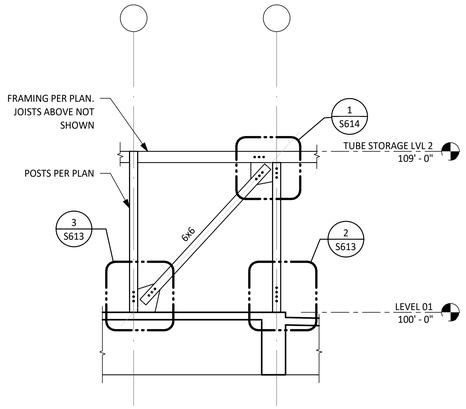


1 ELEVATION - WIND BRACE
SCALE: 1/4" = 1'-0"

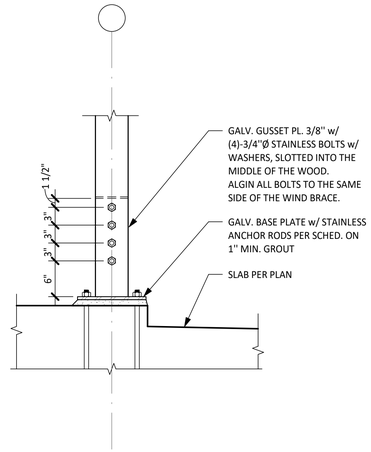


2 DETAIL - BRACE BOTTOM CONNX.
SCALE: 1" = 1'-0"

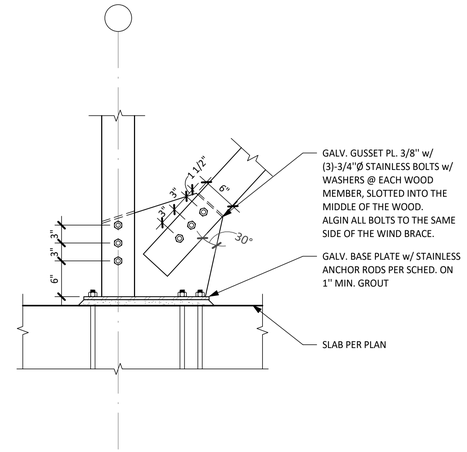


3 DETAIL - BRACE BOTTOM CONNX.
SCALE: 1" = 1'-0"

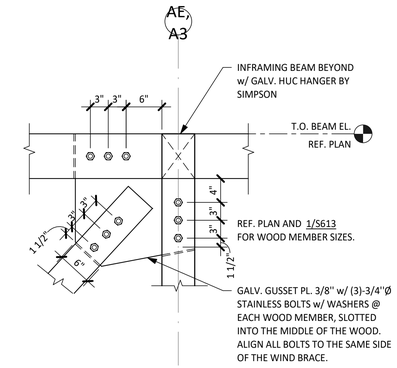


4 DETAIL - BRACE TOP CONNX.
SCALE: 1" = 1'-0"

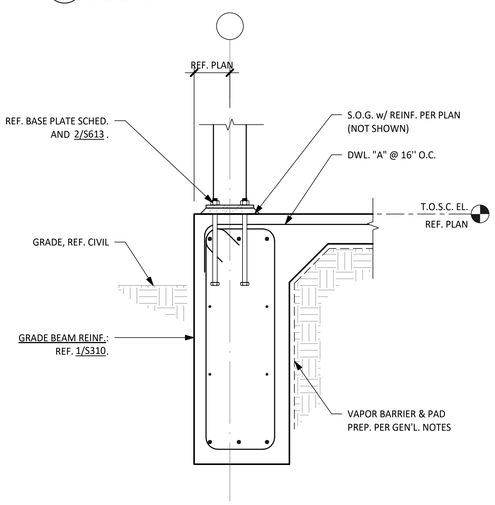


5 DETAIL - TYPICAL POST BASE
SCALE: 1" = 1'-0"

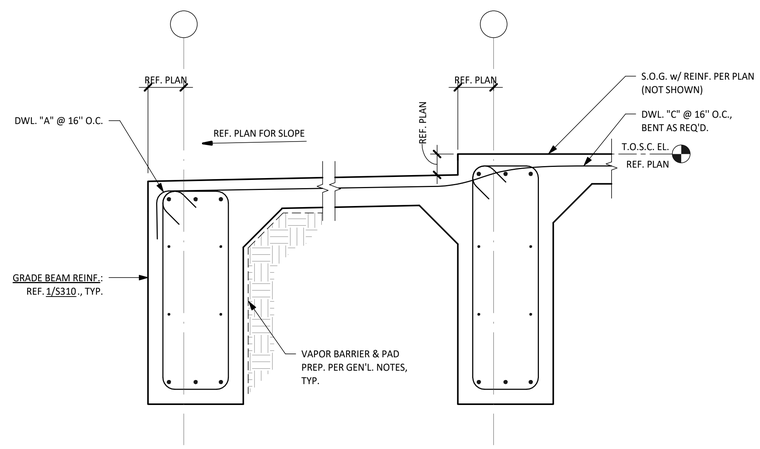


6 SECTION - TUBE STORAGE PORCH
SCALE: 1" = 1'-0"

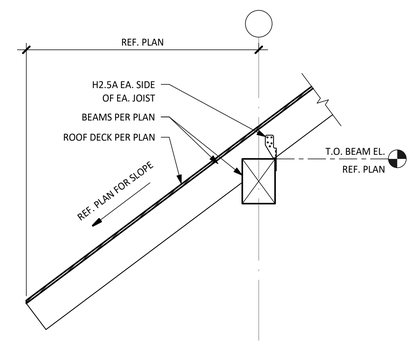


7 SECTION - TUBE STORAGE PERIMETER
SCALE: 1" = 1'-0"

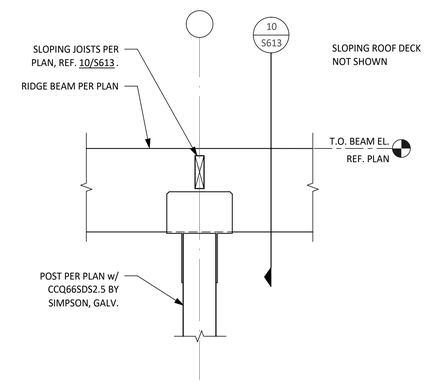


8 DETAIL - RIDGE BEAM SUPPORT
SCALE: 1" = 1'-0"

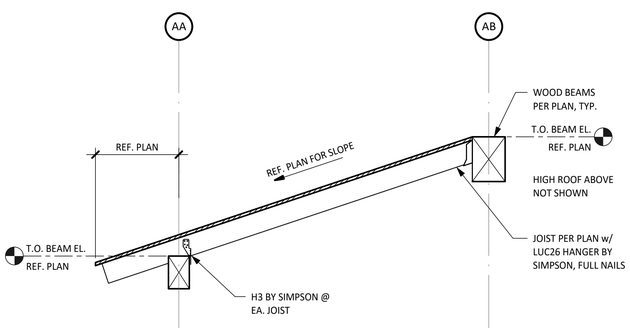


9 SECTION - TUBE STORAGE PORCH ROOF
SCALE: 1" = 1'-0"

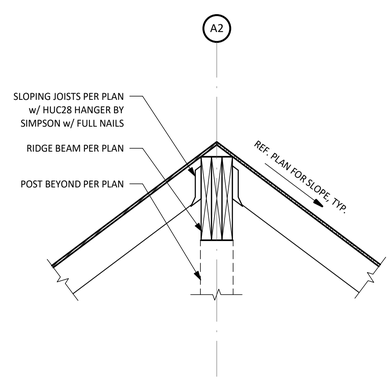


10 SECTION - RIDGE
SCALE: 1" = 1'-0"

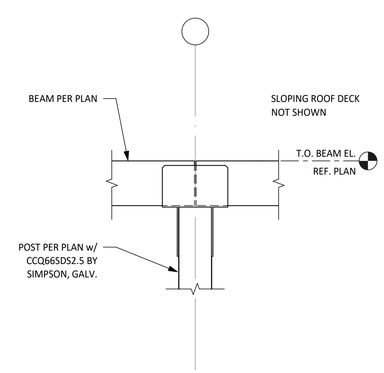


11 SECTION - TYPICAL PERIMETER CONNX.
SCALE: 1" = 1'-0"

TEXAS PARKS & WILDLIFE

STATE OF TEXAS
KARINA TRIBBLE
109642
LICENSED
PROFESSIONAL ENGINEER
4/9/21

# SOUTH LLANO RIVER STATE PARK
## HEADQUARTERS BUILDING RENOVATION AND EXPANSION
PROJECT NUMBER: 134245

DATE: 04/09/2021
DESIGNED BY: MN
DRAWN BY: JS
REVIEWED BY: KT
REVISED:
REVISED:
REVISED:


Architectural Engineers Collaborative
Lamar Central
3800 North Lamar Blvd.
Suite 330
Austin, Tx 78756
P 512.472.2111
www.aecollab.com
FIRM REG.#: F-1985
AEC JOB#: 17012

FORD POWELL &CARSON Architects & Planners, Inc.
Architecture
Planning
Preservation
Interior Design
711 Navarro, Suite 400
San Antonio, Texas 78205
210/226-1246
92706


SHEET TITLE
WOOD DETAILS

SHEET NUMBER
S613

100% CONSTRUCTION DOCUMENTS

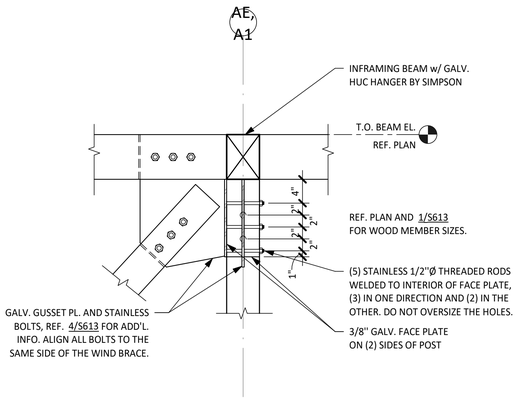


1 DETAIL - BRACE TOP CONNX. - DOUBLE GUSSET
SCALE: 1" = 1'-0"

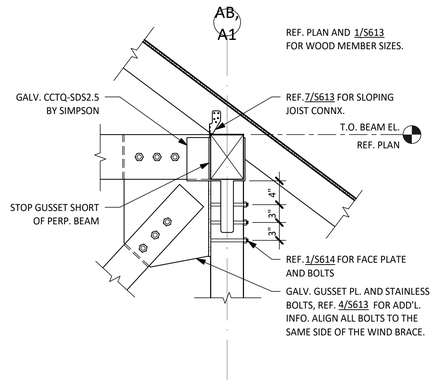


2 DETAIL - BRACE TOP CONNX.
SCALE: 1" = 1'-0"

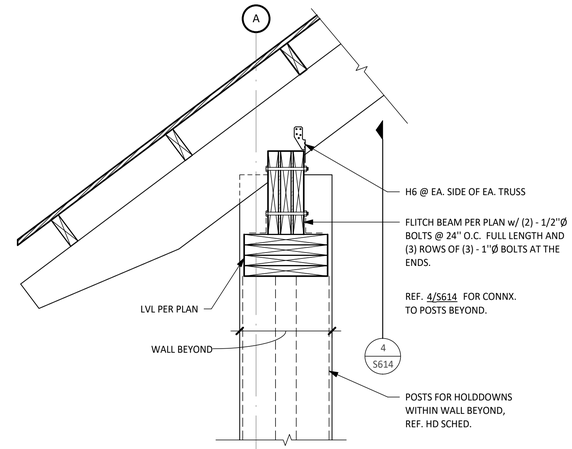


3 SECTION - DOUBLE HEADER AT WINDOW
SCALE: 1" = 1'-0"

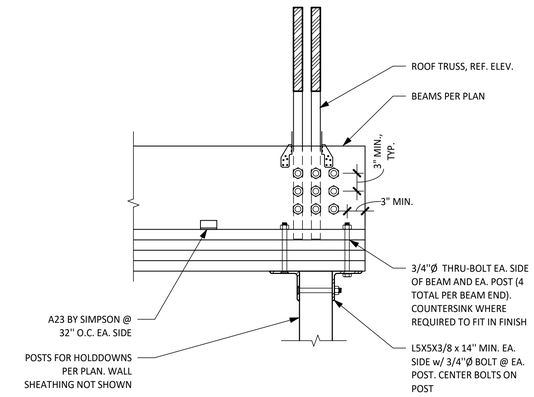


4 SECTION - DOUBLE HEADER END SUPPORT
SCALE: 1" = 1'-0"

TEXAS PARKS & WILDLIFE

STATE OF TEXAS
KARINA TRIBBLE
109642
LICENSED
PROFESSIONAL ENGINEER
4/9/21

# SOUTH LLANO RIVER STATE PARK
## HEADQUARTERS BUILDING RENOVATION AND EXPANSION
PROJECT NUMBER: 134245

DATE: 04/09/2021
DESIGNED BY: MN
DRAWN BY: S
REVIEWED BY: KT
REVISED:
REVISED:
REVISED:


Architectural Engineers Collaborative
Lamar Central
3800 North Lamar Blvd.
Suite 330
Austin, Tx 78756
P 512.472.2111
www.aecollab.com
FIRM REG.#: F-1985
AEC JOB#: 17012

FORD POWELL & CARSON
Architects & Planners, Inc.
Architecture
Planning
Preservation
Interior Design
711 Navarro, Suite 400
San Antonio, Texas 78205
210/226-1246
92706


SHEET TITLE
WOOD DETAILS

SHEET NUMBER
S614

100% CONSTRUCTION DOCUMENTS

# MECHANICAL/REFRIGERATION SYMBOLS AND ABBREVIATIONS

## DUCTWORK SYMBOLS

| SYMBOL | DESCRIPTION |
|---|---|
| | FLAT OVAL DUCT SECTION |
| | ROUND DUCT SECTION |
| 30x24 | DUCT SECTION, POSITIVE PRESSURE, FIRST FIGURE IS TOP |
| 30x24 | DUCT SECTION, NEGATIVE PRESSURE, FIRST FIGURE IS TOP |
| 30x24 | DUCT SIZE FIRST FIGURE IS SIDE SHOWN |
| 30x24Ø | FLAT OVAL DUCTWORK, FIRST FIGURE IS SIDE SHOWN |
| UP | CHANGE OF ELEVATION - UP OR DOWN |
| A.D. | ACCESS DOORS, VERTICAL OR HORIZONTAL |
| | EXISTING DUCT |
| | EXISTING UNDERGROUND RETURN AIR DUCT |
| | FLEXIBLE CONNECTION |
| | FLEXIBLE DUCT (SINGLE LINE REPRESENTATION) |
| | FLEXIBLE DUCT (DOUBLE LINE REPRESENTATION) |
| V.D. | MANUAL VOLUME DAMPER |
| | MOTORIZED VOLUME DAMPER |
| F.D. | FIRE DAMPER (WITH ACCESS DOOR) |
| | DIRECTION OF AIR FLOW |
| 24x8 12x8 | DUCT TRANSITION |
| | ELBOWS WITHOUT TURNING VANES |
| | ELBOWS WITH TURNING VANES |
| V.D. | BRANCH DUCT WITH HEEL TAP AND DAMPERS (RETURN DUCT FLOW IS REVERSE) |
| A 300 | AIR DEVICE TYPE "A", 300 CFM |
| A 200 | SUPPLY GRILLE OR REGISTER, SIDEWALL TYPE "A", 200 CFM. |
| RA | RETURN/EXHAUST AIR DEVICE, TYPE "RA" |
| RA | RETURN/EXHAUST GRILLE OR REGISTER, SIDEWALL, DEVICE TYPE "A" |
| | ROOF VENTILATOR, SUPPLY |
| | ROOF VENTILATOR, EXHAUST |

* NOT ALL SYMBOLS AND ABBREVIATIONS ARE USED ON ALL DRAWING DOCUMENTS.

## CONTROLS

| SYMBOL | DESCRIPTION |
|---|---|
| T | THERMOSTAT |
| T | TEMPERATURE SENSOR |
| H | HUMIDISTAT |

## PIPING GENERAL

| SYMBOL | DESCRIPTION |
|---|---|
| | FLOW - IN DIRECTION OF ARROW |
| | RISER DOWN (ELBOW) |
| | RISER UP (ELBOW) |
| | RISE OR DROP |
| | BRANCH CONNECTION OUT OF TOP |
| | BRANCH CONNECTION OUT OF BOTTOM |
| | BRANCH CONNECTION OUT OF SIDE |
| | CAP ON END OF PIPE |
| | PLUGGED TEE |
| | CONCENTRIC REDUCER |
| | ECCENTRIC REDUCER |
| | UNION (SCREWED) |
| | UNION (FLANGED) |

## DRAWING SYMBOLS

| SYMBOL | DESCRIPTION |
|---|---|
| | NEW TO EXISTING CONNECTION |
| 1 M100 | SECTION ARROW - SECTION 1, SHEET M100 |
| 1 M500 DETAIL SCALE | DETAIL OR PLAN NUMBER 1, SHEET M500 (SCALE AS INDICATED) |
| AHU-1 | EQUIPMENT MARK |
| 1 | KEY NOTES |

## ABBREVIATIONS

| SYMBOL | DESCRIPTION |
|---|---|
| ABV | ABOVE |
| AC | ABOVE CEILING |
| ACC | AIR COOLED CHILLER |
| AD | ACCESS DOOR |
| AFF | ABOVE FINISHED FLOOR |
| AHU | AIR HANDLING UNIT |
| APPROX. | APPROXIMATE |
| AV | AIR VENT |
| ARCH. | ARCHITECTURAL |
| B | BOILER |
| BD | BACK DRAFT DAMPER |
| BF | BELOW FLOOR |
| BLDG. | BUILDING |
| BHP | BRAKE HORSEPOWER |
| BPD | BYPASS DAMPER |
| BTU | BRITISH THERMAL UNIT |
| CFM | CUBIC FEET PER MINUTE |
| CH | CHILLER |
| CI | CAST IRON |
| CLG | CEILING |
| CO | CLEANOUT |
| CONC | CONCRETE |
| COND | CONDENSATE |
| CONNX/CONX. | CONNECTION |
| CONT | CONTINUATION |
| ℄ | CENTERLINE |
| CT | COOLING TOWER |
| CU | CONDENSING UNIT |
| CW | CHILLED WATER |
| CWP | CHILLED WATER PUMP |
| DDC | DIRECT DIGITAL CONTROLS |
| DG | DOOR GRILLE |
| DI | DUCTILE IRON |
| DIA | DIAMETER |
| DB | DRYBULB |
| DN | DOWN |
| DSD | DUCT SMOKE DETECTOR |
| DWG | DRAWING |
| DX | DIRECT EXPANSION |
| EA | EXHAUST AIR |
| EAT | ENTERING AIR TEMPERATURE |
| EDH | ELECTRIC DUCT HEATER |
| EF | EXHAUST FAN |
| EG | EXHAUST GRILLE |
| ELECT | ELECTRICAL |
| ELEV | ELEVATION |
| EMCS | REFRIGERANT MONITORING CONTROL SYSTEM |
| ENT | ENTERING |
| EQUIP. | EQUIPMENT |
| ERV | ENERGY RECOVERY VENTILATOR |
| ESP | EXTERNAL STATIC PRESSURE |
| EWT | ENTERING WATER TEMPERATURE |
| EXH | EXHAUST |
| EXIST | EXISTING |
| F | FAHRENHEIT |
| FA | FRESH AIR |
| FC | FAN COIL |
| FD | FIRE DAMPER |
| FPM | FEET PER MINUTE |
| FS | FLOW SWITCH |
| FT | FEET |
| GAL | GALLON(S) |
| GALV | GALVANIZED |
| GPM | GALLONS PER MINUTE |
| HB | HOSE BIBB |
| HD | HEAD |
| HP | HORSEPOWER |
| HTR | HEATER |
| H2O | WATER |
| HW | HOT WATER |
| HZ | HERTZ |

## ABBREVIATIONS

| SYMBOL | DESCRIPTION |
|---|---|
| ID | INSIDE DIAMETER |
| INV | INVERT |
| IN | INCHES |
| IN WG | INCHES OF WATER |
| JST | JOIST |
| KW | KILOWATT |
| L | LENGTH |
| LAT | LEAVING AIR TEMPERATURE |
| LVR | LOUVER |
| MAX | MAXIMUM |
| MD | MANUAL DAMPER |
| MECH | MECHANICAL |
| MIN | MINIMUM |
| MOBD | MOTORIZED OPPOSED BLADE DAMPER |
| MTD | MOUNTED |
| NA | NOT APPLICABLE |
| NC | NORMALLY CLOSED |
| NIC | NOT IN CONTRACT |
| NO | NORMALLY OPEN |
| NTS | NOT TO SCALE |
| OA | OUTSIDE AIR |
| OBD | OPPOSED BLADE DAMPER |
| OH | OVERHEAD |
| PD | PRESSURE DROP |
| PLBG | PLUMBING |
| PRESS | PRESSURE |
| PSI | POUNDS PER SQUARE INCH, GAUGE |
| PTAC | PACKAGE TERMINAL AIR CONDITIONER |
| PVC | POLYVINYL CHLORIDE |
| RA | RETURN AIR |
| REFRIG. | REFRIGERATION |
| RHD | RELIEF HOOD |
| RH | RELATIVE HUMIDITY |
| RTU | ROOF TOP UNIT |
| SA | SUPPLY AIR |
| SCH | SCHEDULE |
| SD | SMOKE DAMPER |
| SF | SQUARE FOOT |
| SHT | SHEET |
| SP | STATIC PRESSURE |
| SPEC | SPECIFICATION |
| STD | STANDARD |
| STL | STEEL |
| SW | SWITCH |
| T/A | THROW AWAY (FILTERS) |
| T-STAT | THERMOSTAT |
| TEMP | TEMPERATURE |
| TSH | TOTAL SENSIBLE HEAT |
| TXV | THERMOSTATIC EXPANSION VALVE |
| TYP | TYPICAL |
| UF | UNDER FLOOR |
| UG | UNDERGROUND |
| UH | UNIT HEATER |
| UL | UNDERWRITER'S LABORATORIES |
| UNO | UNLESS NOTED |
| V | VENT |
| VB | VALVE BOX |
| VCP | VITRIFIED CLAY PIPE |
| VEL | VELOCITY |
| VENT | VENTILATE |
| VOL | VOLUME |
| VOLT | VOLTAGE |
| VTR | VENT THRU ROOF |
| W | WIDE, WIDTH |
| WB | WET BULB |
| W.C. | WATER COLUMN |
| W/ | WITH |
| W/O | WITHOUT |
| ∠ | ANGLE IRON |

GENERAL NOTES (APPLY TO ALL MECHANICAL SHEETS):

1. DRAWINGS ARE DIAGRAMMATIC ONLY. REFER TO SPECIFICATION SECTION "SPECIAL CONDITIONS FOR ALL MECHANICAL WORK" FOR DETAILS REGARDING COORDINATION AMONG TRADES AND EXISTING CONDITIONS. NOT ALL OFFSETS AND FITTINGS ARE SHOWN ON DRAWINGS. PROVIDE OFFSETS AND FITTINGS AS REQUIRED BY FIELD CONDITIONS AS PART OF THE WORK.
2. ENTIRE INSTALLATION SHALL BE IN COMPLIANCE WITH CODES AS INDICATED ON DRAWING SET COVER SHEET.
3. ALL DUCT DIMENSIONS SHOWN ARE CLEAR AIRSTREAM SHEETMETAL DIMENSIONS, WITH SIZES SHOWN AS WIDTH 1ST AND DEPTH 2ND. INCREASE DUCT SIZES WHERE INTERNAL INSULATION IS SPECIFIED.
4. ALL DUCTWORK DOWNSTREAM OF EQUIPMENT SHALL BE CONSTRUCTED TO SMACNA 2" PRESSURE CLASS U.N.O. SEAL ALL DUCTWORK TO SMACNA TYPE "A" SEAL CLASS. ALL DUCTWORK SHALL BE GALVANIZED STEEL U.N.O.
5. PROVIDE AND INSTALL FLEXIBLE DUCT CONNECTORS AT EVERY CONNECTION TO FAN–POWERED EQUIPMENT, UNLESS INTERNALLY ISOLATED FOR VIBRATION.
6. COORDINATE LOCATION OF THERMOSTATS WITH ARCHITECT BEFORE INSTALLATION. MOUNT 48" AFF.
7. PIPING SHOWN ON PLANS IS TO BE ROUTED ABOVE THE CEILING OF THE FLOOR LEVEL SHOWN U.N.O. CONCEAL PIPING DROPS WITHIN WALLS WHEN LOCATED BELOW THE CEILING U.N.O.
8. DO NOT OPERATE EQUIPMENT FANS UNTIL ALL CLEANING AND PAINTING IS COMPLETED IN THE ASSOCIATED SPACE. THE MECHANICAL CONTRACTOR SHALL BE RESPONSIBLE FOR CLEANING ANY DIRTY COILS OR FAN ASSEMBLIES DUE TO FAILURE TO FOLLOW THIS DIRECTIVE.
9. ALL ACCESSIBLE BRANCH DUCTS SHALL BE PROVIDED WITH A BALANCING DAMPER. IF BRANCH DUCT IS NOT ACCESSIBLE, PROVIDE DIFFUSER WITH DAMPER IN FACE UNLESS NOTED TO PROVIDE A CABLE OPERATED DAMPER.
10. ALL RUN OUTS TO AIR DEVICES TO COMPLY WITH SIDE TAKE–OFF DETAILS AND FLEX DUCT SCHEDULE.

STATE OF TEXAS
THOMAS E. WATSON
114610
LICENSED
PROFESSIONAL ENGINEER

CLEARY ZIMMERMANN ENGINEERS
Firm No. F-9357 | ClearyZimmermann.com

FORD POWELL &CARSON
Architects & Planners, Inc.
Architecture
Planning
Preservation
Interior Design
1138 East Commerce Street
San Antonio, Texas 78205
210/226–1246
92706

TEXAS PARKS & WILDLIFE

SOUTH LLANO RIVER STATE PARK
HEADQUARTERS BUILDING RENOVATION AND EXPANSION
PROJECT NUMBER: 134245

DATE: 04.09.2021
DESIGNED BY: TW
DRAWN BY: TW
REVIEWED BY: TW
REVISED:
REVISED:
REVISED:

CONSTRUCTION DOCUMENTS

SHEET TITLE
MECHANICAL SYMBOLS AND ABBREVIATIONS

SHEET NUMBER
M000

PATH: V:\17045\Mech\17045 – M000.dwg

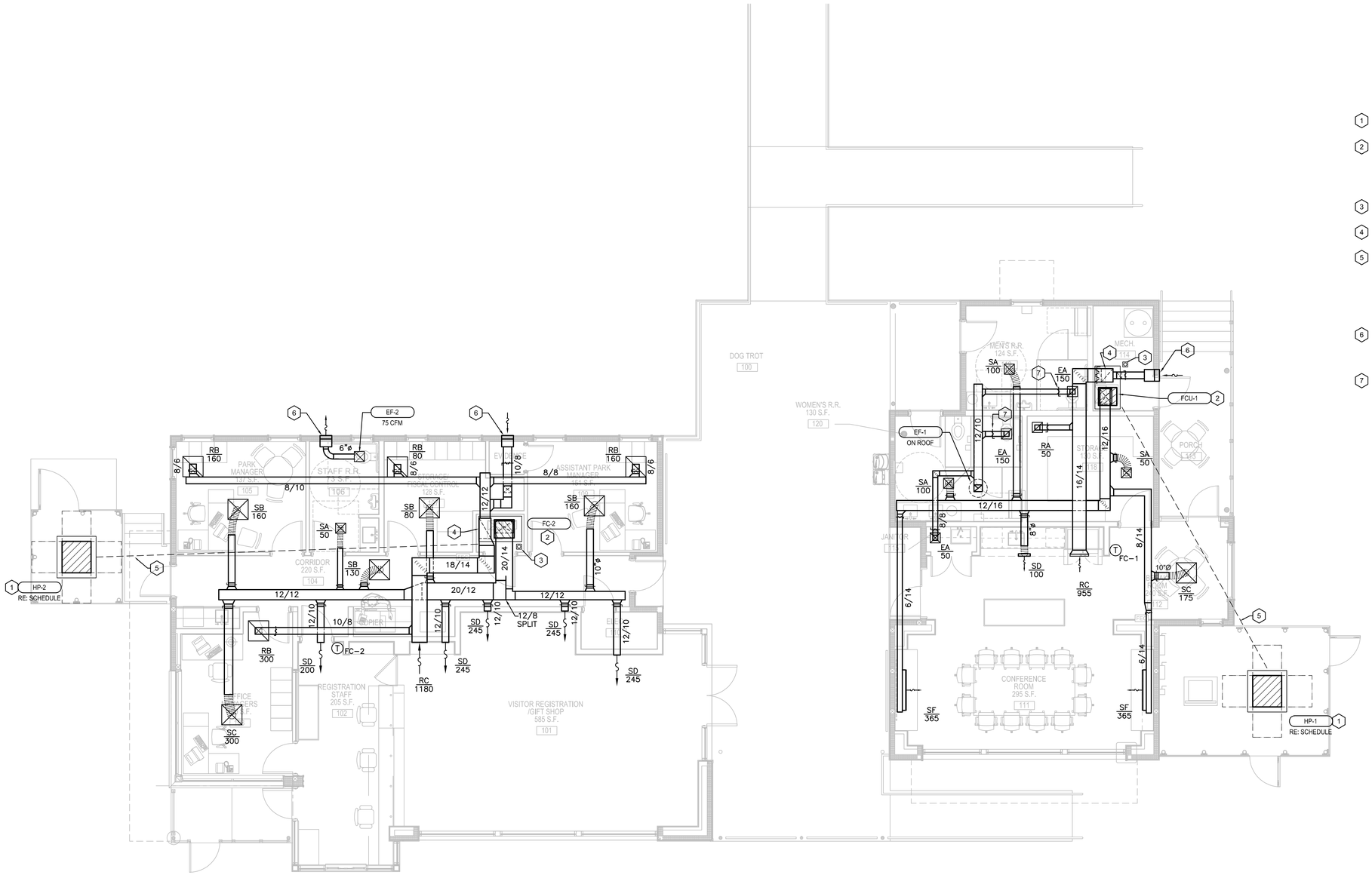


**KEYED NOTES (THIS SHEET ONLY):**

1. INSTALL NEW CONDENSING UNIT ON 4" CONCRETE HOUSEKEEPING PAD AND METAL FRAME. REFER TO DETAILS.
2. PROVIDE 24" TALL, 30" DEEP, 51" WIDE INSULATED SHEET METAL PLENUM BOX WITH METAL FRAMING BELOW UNIT. PROVIDE GALVANIZED STEEL DRAIN PAN WITH UNIT CUT-OUT SWITCH IN PAN ON FLOOR WITHIN PLENUM. PROVIDE 12"X12" INSULATED ACCESS PANEL IN FRONT OF PLENUM BOX FOR ACCESS TO CUT-OUT SWITCH.
3. ROUTE TRAPPED AND INSULATED COPPER CONDENSATE FULL SIZE OF DRAIN FROM UNIT TO FLOOR DRAIN. TRAP PER DETAIL.
4. PROVIDE RETURN AIR DUCT WITH MANUAL DAMPER FOR RETURN AND OUTSIDE AIR DOWN TO PLENUM BOX. SEAL CONNECTION AIR TIGHT.
5. ROUTE EACH SET OF REFRIGERANT LINES IN SEPARATE UNDERGROUND 4" SCH 40 PVC SLEEVE WITH LONG RADIUS ELBOWS. EXTEND SLEEVES TO TOP OF METAL PLATFORM AT CONDENSING UNIT SUPPORT AND TO 6" ABOVE FLOOR IN MECHANICAL ROOM. PIPING IN SLEEVE SHALL BE SOFT COPPER CONTINUOUS WITHOUT JOINTS. INSULATE SUCTION LINES AND SEAL OPEN ENDS OF SLEEVES TO PREVENT WATER ENTRY. COORDINATE INSTALLATION TO AVOID CONFLICTS WITH PLUMBING LINES AND OTHER CONSTRUCTION.
6. PROVIDE 14/10 WIND DRIVEN RAIN LOUVER EQUAL TO RUSKIN EME420DD IN EXTERIOR WALL. PROVIDE 8" DEEP INSULATED METAL PLENUM ON BACK SIDE OF LOUVER (SLOPED TO EXTERIOR) FOR CONNECTION FROM DUCT. MOUNT AS HIGH AS POSSIBLE.
7. PROVIDE REMOTE CABLE OPERATED DAMPER FOR DAMPER LOCATED ABOVE HARD CEILING.

## 1 M101 MECHANICAL FLOOR PLAN

3/16" = 1'-0"

NORTH

0 5' 10' 15' 20'

SCALE: 3/16"=1'-0"

STATE OF TEXAS
THOMAS E. WATSON
114610
LICENSED
PROFESSIONAL ENGINEER

CLEARY ZIMMERMANN ENGINEERS

Firm No. F-9357 | ClearyZimmermann.com

FORD POWELL &CARSON
Architects & Planners, Inc.

Architecture
Planning
Preservation
Interior Design

1138 East Commerce Street
San Antonio, Texas 78205
210/226-1246
92706

TEXAS PARKS & WILDLIFE

SOUTH LLANO RIVER STATE PARK
HEADQUARTERS BUILDING RENOVATION AND EXPANSION
PROJECT NUMBER: 134245

DATE: 04.09.2021
DESIGNED BY: TW
DRAWN BY: TW
REVIEWED BY: TW
REVISED:
REVISED:
REVISED:

CONSTRUCTION DOCUMENTS

SHEET TITLE
MECHANICAL FLOOR PLAN

SHEET NUMBER
M101

PATH: V:\17045\Mech\17045 – M101.dwg

## ELECTRIC UNIT HEATER SCHEDULE

| MARK | CFM | ELECT. (V/PH/KW) | OUTPUT (BTU) | ELEMENTS (NO.) | TEMP. RISE | REFERENCE | NOTES |
|---|---|---|---|---|---|---|---|
| UH-1 | 400 | 240 / 1 / 2 | 6,828 | 1 @ 2KW | 40 DEG. | CHROMALOX HD3D | 1,2,3 |

NOTES (ELECTRIC UNIT HEATER SCHEDULE):
1. PROVIDE MANUFACTURER'S INTEGRAL THERMOSTAT OPTION SET AT 65 DEGREES.
2. PROVIDE MANUFACTURER'S STANDARD MOUNTING HARDWARE.
3. REFER TO E203 FOR LOCATION ON PLANS.

## LOUVER SCHEDULE

| MARK | SIZE | MAX. CFM | MIN. FREE AREA (SQ FT) | FREE AREA VELOCITY (fpm) | MAX. S.P. DROP ("WG) | SERVICE | MANUFACTURER / MODEL | MAX. H20 PENE. * | NOTES |
|---|---|---|---|---|---|---|---|---|---|
| L-1 | 30" X 30" | 2500 | 3.27 | 766 | 0.09 | PUMP HOUSE | RUSKIN ELF6375DX | 1023 | 2 |

* AT MAX. CFM
1. PROVIDE WITH BACKDRAFT DAMPER.
2. PROVIDE WITH ALUMINUM WEATHER HOOD AND BUG SCREEN.

## FLEX DUCT SCHEDULE

| CFM RANGE | SIZE (DIAMETER) * |
|---|---|
| 0 – 50 | 6 |
| 51 – 80 | 8 |
| 81 – 170 | 10 |
| 171 – 300 | 12 |
| 301 – 450 | 14 |

* ALL FLEX DUCT SHALL BE SIZED IN ACCORDANCE W/ FLEX DUCT SCHEDULE. PROVIDE RIGID REDUCER AT NECK OF AIR DEVICE, VAV INLET DUCT, ETC. TO TRANSITION FROM FLEX DUCT SIZE TO DIFFUSER INLET AND/OR EQUIPMENT CONNECTION SIZE. FLEX DUCT NOT TO EXCEED 6FT.
INCREASE FLEX DUCT SIZE AS REQUIRE TO MATCH DIFFUSER.

## SPLIT-SYSTEM SCHEDULE

| MARK | FCU-1/HP-1 | FCU-2/HP-2 | |
|---|---|---|---|
| **COOLING PER COIL** | | | |
| ENTERING AIR (DB/WB) | 74.9/65.6 | 74.3/66.6 | |
| LEAVING AIR (DB/WB) | 55.0/53.2 | 55.0/53.0 | |
| TOTAL CAPACITY (MBH) | 36.8 | 62.6 | |
| SENSIBLE CAPACITY (MBH) | 28.0 | 50.3 | |
| **HEAT PUMP CAPACITY** | | | |
| ENTERING AIR (DB) | 65.6 | 66.6 | |
| LEAVING AIR (DB) | 85 | 85 | |
| TOTAL CAPACITY (MBH) | 27.7 | 48.5 | |
| **INDOOR FAN COIL** | | | |
| EXTERNAL STATIC PRESSURE (INCH W.G.) | 0.5 | 0.5 | |
| CFM | 1205 | 2060 | |
| OUTSIDE AIR (MIN.) | 250 | 200 | |
| FAN HP | 1/2 | 1.0 | |
| ELECTRICAL SERVICE (V/PH/MCA/MOCP) | 230/1/4.1/15 | 230/1/7.6/15 | |
| DRIVE TYPE | DIRECT – 5 | DIRECT – 5 | |
| **CONDENSER UNIT** | | | |
| ENT. AIR (DB) | 100 | 100 | |
| NUMBER OF COMPRESSORS | 1 | 1 | |
| CONDENSOR FAN MOTOR (NO./HP) | 1 / 1/8 | / 1/5 | |
| ELECTRICAL SERVICE (V/PH/MCA/MOCP) | 230/1/18/30 | 230/1/32/50 | |
| SEER | 19 | 19 | |
| **REFERENCE** | | | |
| MANUFACTURER INDOOR/OUTDOOR SECTION | TRANE | TRANE | |
| FAN-COIL UNIT MODEL | GAM5B0B36M31 | GAM5B0C60M51 | |
| CONDENSER UNIT MODEL | 4TWA9036A1 | 4TWA9060A1 | |
| NOTES | 1,2,3,4,5,6 | 1,2,3,4,5,6 | |

NOTES (SPLIT-SYSTEM SCHEDULE):
1. PROVIDE UNIT WITH BOTTOM RETURN FILTER BOX, SUPPLY DUCT FLANGE AND PLENUM STAND WITH SOUND BAFFLE.
2.PROVIDE HEAT PUMP UNIT WITH METAL CONDENSER COIL HAIL GUARDS.
3. PROVIDE WITH LOW AMBIENT CONTROL KIT.
4. INSTALL CONDENSING UNIT ON METAL STAND ON 4" THICK CONCRETE HOUSEKEEPING PAD. REFER TO DETAILS.
5. PROVIDE UNIT WITH 7-DAY PROGRAMMABLE THERMOSTAT WITH AUTO-CHANGE OVER.
6. PROVIDE RAWAL APR VALVE ON CONDENSING UNIT.

## FAN SCHEDULE

| MARK | TYPE | MANUFACTURER & MODEL | SERVICE | CFM | S.P. ("WG) | MAX. BHP | H.P. | V/PH | MAX. SONES | DRIVE | CONTROL | NOTES |
|---|---|---|---|---|---|---|---|---|---|---|---|---|
| EF-1 | CENTR.-DOWNBLAST | COOK 90C15DH | RESTROOMS | 350 | 0.30 | 79.4 W | 1/8 | 120/1 | 5.9 | DIRECT | CONTINUOUS | 1,2 |
| EF-2 | CEILING MOUNT | COOK GC-124 | STAFF RR | 75 | 0.25 | 63 W | 1/12 | 120/1 | 1.7 | DIRECT | SWITCH | 2,3 |
| EF-3 | WALL-MOUNT | COOK SWD12 | PUMP HOUSE | 1245 | 0.13 | 1/8 | 1/8 | 120/1 | 11.1 | DIRECT | T-STAT | 4 |

NOTES (FAN SCHEDULE):
1. PROVIDE MANUFACTURER'S STANDARD 18-IN ROOF CURB (VERIFY ROOF PITCH) WITH BIRD SCREEN, DAMPER TRAY AND GRAVITY DAMPER.
2. PROVIDE MANUFACTURER'S STANDARD MOTOR RATED SWITCH.
3. SUPPORT FAN WITH MANUFACTURER'S STANDARD MOUNTING HARDWARE.
4. PROVIDE WITH BACKDRAFT DAMPER AND INSECT SCREEN. REFER TO E203 FOR LOCATION ON PLANS.

## AIR DEVICE SCHEDULE

| MARK | MODEL | SIZE | THROW (@ 100 FPM) | CFM RANGE | INLET | # SLOTS | O.B.D. REQ'D. ? | P.D. ("WG) * | MAX. NC | REFERENCE | NOTES |
|---|---|---|---|---|---|---|---|---|---|---|---|
| SA | TMS | 12"x12" | 3 FT | 50-80 | 8"ø | N/A | NO | 0.04 | – | TITUS | 1,7 |
| SB | TMS-AA | 24x24" | 5 FT | 81-170 | 10"ø | N/A | NO | 0.06 | 20 | TITUS | 1 |
| SC | TMS-AA | 24x24" | 6 FT | 171-300 | 12"ø | N/A | NO | 0.06 | 25 | TITUS | 1 |
| SD | 300FS | 14"x12" | 11 FT | 300-400 | 12"x10" | N/A | NO | 0.13 | 20 | TITUS | 1,2,8 |
| SE | TBD-10 | 5.25"x48" | 12 FT | 100-250 | 12"ø | 2 @ 1-1/2" SPACING | NO | 0.08 | 25 | TITUS | 1,8 |
| SF | CT-480 | 4""x48" | 17 FT | 100 CFM/FT | 4" X 48" | 1/8" THICK / 1/4" SPACING | NO | 0.03 | 25 | TITUS | 1,8 |
| | | | | | | | | | | | |
| RA | 50F | 12"x12" | – | 0-400 | 10"x10" | N/A | NO | 0.07 | 20 | TITUS | |
| RB | 50F | 24"x24" | – | 0-2000 | 22"x22" | N/A | NO | 0.06 | 20 | TITUS | |
| RC | 350RL | 22"x22" | – | 0-1270 | 20"x20" | N/A | NO | 0.06 | 20 | TITUS | 3,8 |
| | | | | | | | | | | | |
| EA | 50F | 12"x12" | – | 0-400 | 10"x10" | N/A | NO | 0.07 | 20 | TITUS | |

* AT MAX. CFM

KEYED NOTES (AIR DEVICE SCHEDULE):
1. FIELD INSULATE PLENUM BOX OR BACKSIDE OF DIFFUSER.
2. 45 DEGREE DEFLECTION, 3/4" BLADE SPACING.
3. STEEL CONSTRUCTION.
4. O.B.D. REQUIRED AT DUCTED EXHAUST LOCATION ONLY WHERE WHERE VOLUME DAMPER IN DUCT IS INACCESSIBLE FOR BALANCING.
5. 2-WAY SQUARE DISCHARGE PATTERN.
6. ANGLE AT 25 DEGREE BELOW HORIZONTAL CENTERLINE.
7. 24x24" MODULE SIZE FOR LAY-IN CEILING INSTALLATION.
8. PROVIDE BRUSHED ALUMINUM FINISH.

GENERAL NOTES (AIR DEVICE SCHEDULE):
1. ALL AIR DEVICES TO BE ALUMINUM, WHITE FINISH UNLESS NOTED OTHERWISE.
2. REFER TO REFLECTED CEILING PLANS FOR CEILING TYPES. ALL AIR DEVICES MOUNTED IN A DRYWALL CEILING SHALL HAVE A MOUNTING FRAME.
3. FOR 2-WAY DISCHARGE, THROWS LISTED REFLECT AIRFLOW IN A SINGLE DIRECTION.
4. P.D. ("WG) REFLECTS "TOTAL" PRESSURE (STATIC AND DYNAMIC).
5. REFER TO FLEX DUCT SCHEDULE FOR DUCT SIZES.
6. TRANSITION AS REQUIRED TO CONNECT DUCT TO AIR DEVICE.


STATE OF TEXAS
THOMAS E. WATSON
114610
LICENSED
PROFESSIONAL ENGINEER

CLEARY ZIMMERMANN ENGINEERS
Firm No. F-9357 | ClearyZimmermann.com

FORD POWELL &CARSON
Architects & Planners, Inc.
Architecture
Planning
Preservation
Interior Design
1138 East Commerce Street
San Antonio, Texas 78205
210/226-1246
92706


TEXAS PARKS & WILDLIFE

SOUTH LLANO RIVER STATE PARK
HEADQUARTERS BUILDING RENOVATION AND EXPANSION
PROJECT NUMBER: 134245

DATE: 04.09.2021
DESIGNED BY: TW
DRAWN BY: TW
REVIEWED BY: TW
REVISED:
REVISED:
REVISED:

CONSTRUCTION DOCUMENTS

SHEET TITLE
MECHANICAL SCHEDULES

SHEET NUMBER
M300

PATH: W:\17045\Mech\17045 – M300.dwg

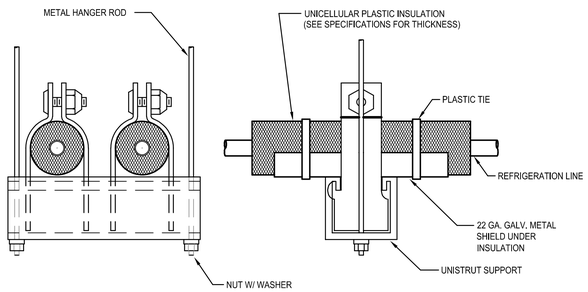


## 1 M500 TYPICAL HANGER DETAIL FOR MULTIPLE INSULATED REFRIGERATION LINES

NOT TO SCALE

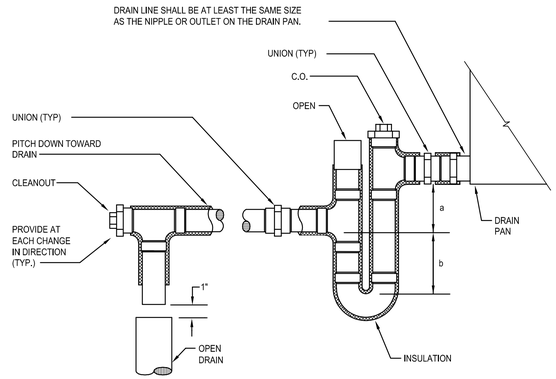


| UNIT STATIC PRESS. | a | b |
|---|---|---|
| 0"-1" | 1" | 2" |
| 1"-2" | 2" | 3" |
| 2"-3" | 3" | 4" |

NOTES:

1. FOR DEPTH OF SEAL, SEE SCHEDULE BELOW.
2. LOCATE TRAP SO AS TO BE ACCESSIBLE FOR CLEANING.

## 2 M500 TYPICAL DRAIN TRAP DETAIL

NOT TO SCALE

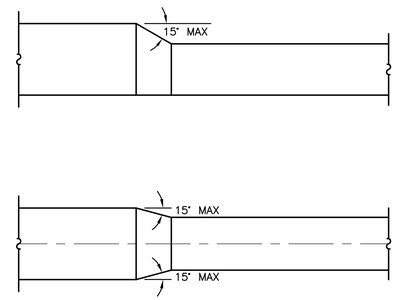


NOTE:

UNLESS OTHERWISE INDICATED ON PLANS, MAXIMUM ANGLES SHOWN ABOVE SHALL APPLY.

## 3 M500 DUCT TRANSITION DETAIL

NOT TO SCALE

MECHANICAL GENERAL NOTES: (APPLICIBLE FOR ALL SHEETS)

1. 24x24 CEILING MOUNTED ACCESS DOORS SHALL BE PROVIDED AND INSTALLED IN CEILINGS FOR ACCESS TO ALL DAMPERS (FSD, FD, BD) INSTALLED ABOVE SHEETROCK (OR INACCESSIBLE) CEILINGS.
2. ALL SIDE TAKE OFF FITTINGS SHALL BE BOOT TYPE (EQUAL TO FLEXMASTER STOD). 26 GAUGE, G-90 GALVANIZED STEEL, 1" WIDE MOUNTING FLANGE, 2" INSULATION BUILDOUT, 3/8" SQUARE SHAFT, U. BOLT, NYLON BUSHINGS AND LOCKING QUADRANT.
3. INSULATE BACKPANEL OF ALL AIR DEVICES AND PLENUM BOXES WITH BLANKET TYPE INSULATION. (1.5" THICK, 0.75 LB/SQFT DENSITY. INSTALLED R VALUE OF SIX (6))
4. ALL FLEXIBLE DUCTWORK SHALL BE SUPPORTED ABOVE CEILING.
5. ALL DUCTWORK SHALL BE EXTERNALLY WRAPPED WITH 1.5" THICK INSULATION (DUCT WRAP), 0.75 LB/SQFT DENSITY, INSTALLED R VALUE OF SIX (6). ALL DUCT WRAP VAPOR BARRIERS SHALL BE SEALED VAPOR TIGHT WITH TAPE AND SEALANT. (UNLESS NOTED OR SPECIFIED OTHERWISE)
6. FIRE CAULK AND SEAL ALL PENETRATIONS IN FIRE RATED WALLS (DUCT, PIPING, CONDUIT, ETC). REFERENCE ARCHITECTURAL FOR WALL RATINGS.
7. SLEEVE AND SEAL ALL WALL AND FLOOR PENETRATIONS FOR PIPING. ALL RISERS THROUGH FLOOR SHALL BE INSTALLED WITH RISER CLAMPS. SEAL ALL FLOOR PENETRATIONS.
8. ALL DUCTWORK PENETRATIONS THROUGH SHEETROCK WALLS SHALL BE SUPPORTED / FRAMED IN WITH SUPPORT ANGLE.
9. COORDINATE INSTALLATION OF EQUIPMENT, DUCTWORK AND PIPING SYSTEMS WITH ALL OTHER TRADES.
10. USE ONLY DWV FITTINGS ON HVAC CONDENSATE DRAIN PIPING. TRAP PER MECHANICAL DETAILS.
11. DIELECTRIC UNIONS SHALL BE USED AT ALL DISSIMILAR METAL PIPING CONNECTIONS. VALVES SHALL NOT BE USED IN LIEU OF A DIELECTRIC UNION.
12. FLEXIBLE DUCT CONNECTIONS SHALL BE INSTALLED AT ALL AIR HANDLER / FAN COIL - DUCT CONNECTIONS.
13. INSULATED PIPING ON HANGERS SHALL SIT ON PIPE SADDLES. HIGH DENSITY (7.5 LB/CU FT) INSERTS AT SADDLES ARE REQUIRED (WOOD BLOCKS ARE NOT ACCEPTABLE).

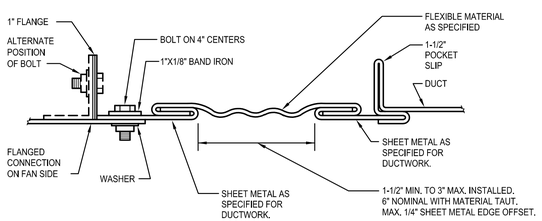


RECTANGULAR FLEXIBLE CONNECTION

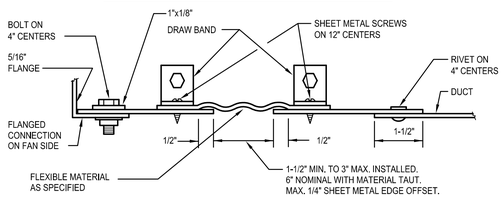


ROUND FLEXIBLE CONNECTION

TO BE INSTALLED AT ALL BUILDING EXPANSION JOINTS AND ALL HVAC UNIT CONNECTIONS. CONTRACTOR IS RESPONSIBLE FOR LOCATION AND QUANTITY.

## 4 M500 FLEX DUCT CONNECTION DETAILS

NOT TO SCALE

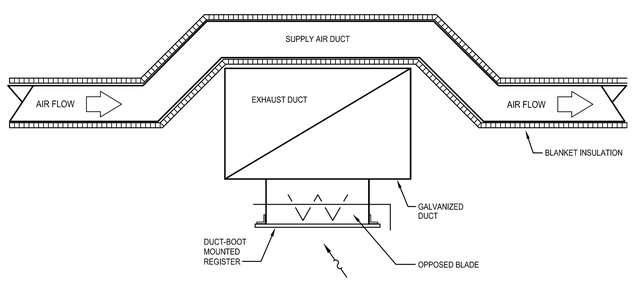


## 5 M500 DUCT CROSS OVER DETAIL

NOT TO SCALE

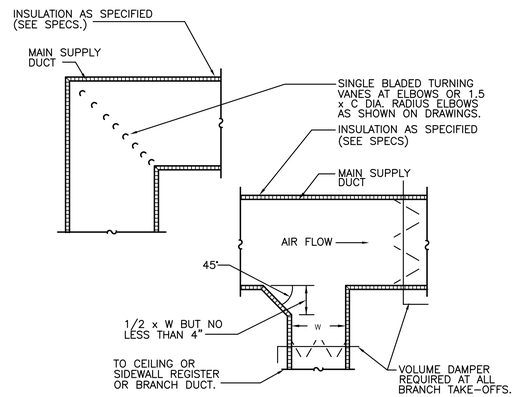


## 6 M500 ELBOW AND DUCT TAKE-OFF

NOT TO SCALE

TEXAS PARKS & WILDLIFE

SOUTH LLANO RIVER STATE PARK
HEADQUARTERS BUILDING RENOVATION AND EXPANSION
PROJECT NUMBER: 134245

STATE OF TEXAS
THOMAS E. WATSON
114610
LICENSED
PROFESSIONAL ENGINEER

CLEARY ZIMMERMANN ENGINEERS

Firm No. F-9357 | ClearyZimmermann.com

FORD POWELL &CARSON Architects & Planners, Inc.

Architecture
Planning
Preservation
Interior Design

1138 East Commerce Street
San Antonio, Texas 78205
210/226-1246
92706

DATE: 04.09.2021
DESIGNED BY: TW
DRAWN BY: TW
REVIEWED BY: TW
REVISED:
REVISED:
REVISED:

CONSTRUCTION DOCUMENTS

SHEET TITLE
MECHANICAL DETAILS

SHEET NUMBER
M500

PATH: W:\17045\Mech\17045 – M500.dwg

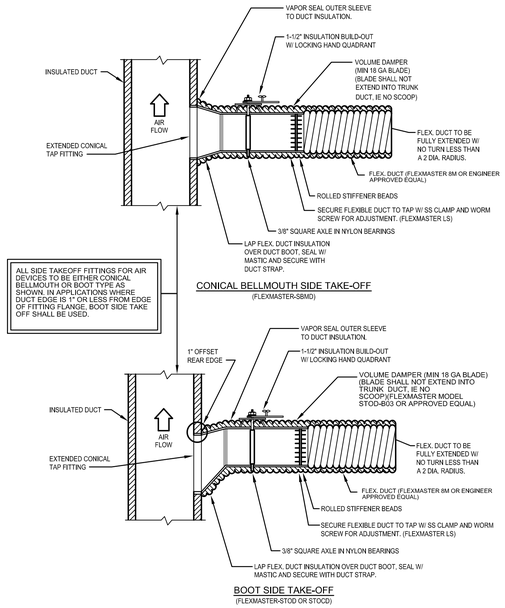


1 M501 SIDE TAKE-OFF DETAIL
NOT TO SCALE

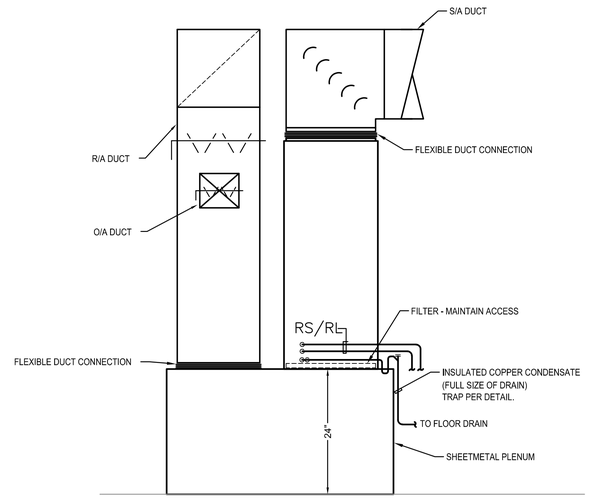


2 M501 FAN COIL ELEVATION
NOT TO SCALE (FC-1)

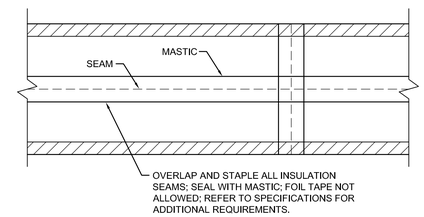


3 M501 DUCT INSULATION SEAMS/MASTIC
NOT TO SCALE

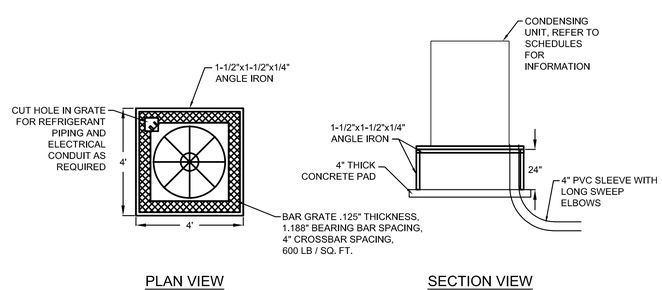


5 M501 CONDENSING UNIT SUPPORT
NOT TO SCALE

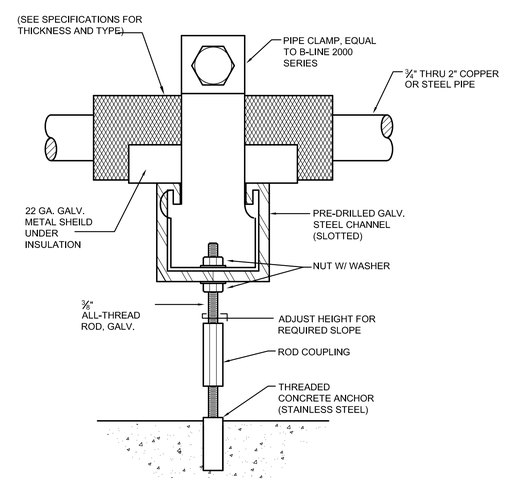


4 M501 FLOOR-MOUNTED INDIRECT DRAIN PIPING
NOT TO SCALE

TEXAS PARKS & WILDLIFE

SOUTH LLANO RIVER STATE PARK
HEADQUARTERS BUILDING RENOVATION AND EXPANSION
PROJECT NUMBER: 134245

DATE: 04.09.2021
DESIGNED BY: TW
DRAWN BY: TW
REVIEWED BY: TW
REVISED:
REVISED:
REVISED:

STATE OF TEXAS
THOMAS E. WATSON
114610
LICENSED
PROFESSIONAL ENGINEER

CLEARY ZIMMERMANN ENGINEERS
Firm No. F-9357 | ClearyZimmermann.com

FORD POWELL &CARSON Architects & Planners, Inc.
Architecture
Planning
Preservation
Interior Design
1138 East Commerce Street
San Antonio, Texas 78205
210/226-1246
92706

SHEET TITLE
MECHANICAL DETAILS

SHEET NUMBER
M501

CONSTRUCTION DOCUMENTS

PATH: W:\17045\Mech\17045 – M501.dwg

# ELECTRICAL SYMBOLS AND ABBREVIATIONS

(SOME SYMBOLS MAY NOT BE APPLICABLE TO THIS PROJECT)

## SYMBOLS

### GENERAL

- MOTOR, HP AS INDICATED
- CONTROLLER TO BE FURNISHED UNDER DIVISION 15 AND INSTALLED UNDER DIVISION 16
- DISCONNECT SWITCH
- MAGNETIC MOTOR STARTER
- COMBINATION MOTOR STARTER/DISCONNECT SWITCH
- GROUNDING REFERENCE POINT.
- JUNCTION BOX, CEILING MOUNTED
- JUNCTION BOX, WALL MOUNTED
- PC — PHOTO CELL
- R — RELAY
- TC — TIME CLOCK
- C — CONTACTOR
- BELL
- BUZZER
- CEILING MOUNTED CLOCK
- WALL MOUNTED CLOCK
- WALL MOUNTED DOUBLE FACE CLOCK-HEIGHT AS DESIGNATED BY ARCHITECT
- TV — HORN
- A — TRANSFORMER AS INDICATED
- ATS — AUTOMATIC TRANSFER SWITCH
- EQUIPMENT CONNECTION
- 2 — KEYED NOTE NO. 2
- CH- — MECHANICAL EQUIPMENT DESIGNATION. REFER TO MECHANICAL EQUIPMENT SCHEDULES.

### LUMINAIRES

- A / B — LUMINAIRE, CEILING OR WALL MOUNTED (SEE FIXTURE SCHEDULE). SUBSCRIPT INDICATES ASSOCIATED SWITCHING. CAPITAL LETTER INDICATES FIXTURE TYPE. "E" SUFFIX INDICATES BATTERY BACK-UP.
- FIXTURE CEILING MOUNTED (SEE FIXTURE SCHEDULE)
- FIXTURE WALL MOUNTED (SEE FIXTURE SCHEDULE)
- WALLWASH FIXTURE CEILING MOUNTED. ARROW INDICATES DIRECTION OF WASH.
- EXIT LIGHT, UNSWITCHED, CEILING MOUNTED WITH ARROWS AS INDICATED ON DRAWINGS. CONNECT TO EMERGENCY SYSTEM (IF AVAILABLE).
- EXIT LIGHT, UNSWITCHED, WALL MOUNTED, WITH ARROWS AS INDICATED ON DRAWINGS. CONNECT TO EMERGENCY SYSTEM (IF AVAILABLE).
- FIXTURE IS SWITCHED AND CONNECTED TO CRITICAL BRANCH POWER
- FIXTURE IS CONNECTED TO LIFE SAFETY POWER
- EMERGENCY LIGHT, WALL MOUNTED, UNSWITCHED, BATTERY TYPE WITH CHARGER.
- POLE MOUNTED LUMINAIRE. SEE SCHEDULE OR NOTES FOR TYPE. ORIENT FIXTURE FOR CUT-OFF TOWARDS AREA TO BE LIT. ORIENT HOUSE SHIELD TOWARDS BUILDING. SEE DETAILS FOR POLE BASE, PROVIDE POLE BASE GROUND ROD.
- FLOOD LIGHT. ARROW INDICATES AIMING DIRECTION.
- TRACK LIGHT WITH HEADS AS INDICATED

### RACEWAYS

- CONDUIT CONCEALED IN WALL OR CEILING WITH ONE PHASE, NEUTRAL AND GROUND CONDUCTOR UNLESS OTHERWISE NOTED
- CONDUIT UNDER FLOOR OR CAST IN STRUCTURE WITH ONE PHASE, NEUTRAL AND GROUND CONDUCTOR UNLESS OTHERWISE NOTED.
- SWITCH LEG
- P1A-2,4,6 — BRANCH CIRCUIT HOMERUN SUBSCRIPT "P1A" INDICATES PANEL AND 2,4,6 INDICATES BREAKER POSITION. 3/4"C, 2#12 AND 1#12 GND. MIN.
- SURFACE RACEWAY (PANDUIT TWIN 70 OR WIREMOLD EQUIV)
- T — TELEPHONE
- BUS DUCT WITH TAKE OFF DEVICE

### PANEL AND RELATED ITEMS

- PANELBOARD (SEE SCHEDULE), SURFACE MOUNTED.
- PANELBOARD (SEE SCHEDULE), FLUSH MOUNTED.
- SWBD — SWITCHBOARD OR DISTRIBUTION BOARD
- MCC — MOTOR CONTROL CENTER
- TVSS — TRANSIENT VOLTAGE SURGE SUPPRESSOR.
- TELE — PLYWOOD TELEPHONE BACKBOARD; PROVIDE WALL MOUNTED WHITE PAINTED 4x8' PLYWOOD BACKBOARD, SURGE PROTECTION, SECONDARY GROUND, AND TWO QUAD RECEPTACLES AT THE BASE OF THE BACKBOARD.

### OUTLETS

- IVORY SIMPLEX RECEPTACLE
- DUPLEX RECEPTACLE, 20A, 1P, IVORY WITH COVER PLATE
- WP, T, GFI, IG, C, TV — DUPLEX RECEPTACLE; GFI=GROUND FAULT INTERRUPTING, WP=WEATHERPROOF, T=TAMPER RESISTANT, IG=ORANGE ISOLATED GROUND, C=CLOCK OUTLET MOUNTED 18" BELOW CEILING, TV=TV RECEPTACLE WITH COMBINATION DUPLEX/COAX PLATE MOUNTED 7'6" AFF, BC = OUTLET MOUNTED 16" BELOW COUNTER WITHIN CASEWORK
- USB — DUPLEX RECEPTACLE WITH 2 USB 3.1 PORTS (20 VOLTS AT 5 AMPS FOR A TOTAL OF 100 WATTS OF POWER)
- DOUBLE DUPLEX (QUADRUPLEX) RECEPTACLE, IVORY, WITH COVER PLATE
- RED DUPLEX RECEPTACLE WITH IVORY COVERPLATE CONNECTED TO EMERGENCY POWER BRANCH
- RED QUAD RECEPTACLE WITH IVORY COVERPLATE, CONNECTED TO EMERGENCY POWER BRANCH
- SPECIAL PURPOSE RECEPTACLE, SEE PANEL SCHEDULES AND FLOOR PLAN NOTES FOR TYPE. RECEPTACLE SHALL BE FLUSH MOUNT, PROVIDE TWO GANG BACKBOX, PLASTER RING, AND STAINLESS STEEL PLATE.
- ROUND FLUSH FLOOR BOX WITH DUPLEX POWER, AND BRASS COVER PLATE. HUBBELL B2529 WITH SF3925 COVER.
- FLOOR BOX HUBBELL LCFBSS (OR EQUIV.), PROVIDE 3/4" CONDUIT FOR POWER AND 1-1" CONDUIT FOR DATA/IT EQUIPMENT. PROVIDE TWO (2) 20A SINGLE POLE DUPLEX RECEPTACLES, AND TWO (2) TWO SPACE MODULAR RJ-45 JACK PLATES. SEE FLOOR PLANS/SPECS FOR DATA FILL AND WHETHER IT CONDUIT IS TO ABOVE ACCESSIBLE CEILING, CABLE TRAY, OR BACK TO IDF/MDF/PHONE BOARD. PROVIDE FLOOR INSERT.
- TELEVISION OUTLET; FEMALE COAX JACK, WALL PLATE, 3/4" CONDUIT TO ABOVE ACCESSIBLE CEILING, PLENUM RATED RG-59U AND ONE CAT 6 PAIR TO NEAREST IDF.
- DATA OUTLET; TWO GANG BOX, CONDUIT BUSHINGS, PLASTER RING, TWO (2) RJ-45 JACK MODULAR WALL PLATE, 3/4" CONDUIT TO ABOVE ACCESSIBLE CEILING AND FOUR PLENUM RATED CAT 6 CABLES TO NEAREST IDF.
- WAP — WIRELESS ACCESS POINT - PROVIDE (2) PLENUM RATED CAT 6 CABLE WITH IDFT. OF SLACK TO NEAREST IDF.

### SWITCHES

- SINGLE POLE SWITCH, LOWERCASE SUBSCRIPT INDICATES ASSOCIATED CIRCUITRY
- DOUBLE POLE SWITCH
- THREE-WAY SWITCH
- FOUR-WAY SWITCH
- K — KEY OPERATED SWITCH
- P — SWITCH WITH PILOT LIGHT IN HANDLE (ON LIGHTED UNLESS OTHERWISE NOTED)
- WP — WEATHERPROOF SWITCH
- MT — MANUAL MOTOR STARTER SWITCH (T=THERMAL OVERLOAD SIZED FOR MOTOR)
- D, 0-10V — 0-10V DIMMER WALL SWITCH COMPATIBLE WITH THE DRIVERS OF RELATED LIGHTING FIXTURES.
- LV — ELECTRONIC LOW VOLTAGE OFF/ON SWITCH COMPATIBLE WITH DRIVERS BEING CONTROLLED.
- EP — EXPLOSION PROOF SWITCH
- T — TIMER SWITCH
- S1, S2, S3 — MULTIPLE SWITCHES, GANGED.
- LV — LOW VOLTAGE WALL SWITCH COMPATIBLE WITH THE DRIVERS OF RELATED LIGHTING FIXTURES.
- CEILING MOUNTED DUAL TECHNOLOGY MOTION SENSOR.
- OS, OS2 — WALL SWITCH INFRARED OCCUPANCY SENSOR WITH MANUAL PUSH BUTTON OVERRIDE AND ADJUSTABLE FIELD OF VIEW (LEVITON ODS15-ID). OS2 INDICATES DUAL MANUAL SWITCHING
- PUSHBUTTON

### FIRE ALARM

- FACP — FIRE ALARM CONTROL PANEL
- FAEX — FIRE ALARM EXPANSION PANEL
- ANN — REMOTE FIRE ALARM ANNUNCIATOR
- F — MANUAL PULL STATION 48" AFF
- SD — SMOKE DETECTOR; DASHED INDICATES BELOW RAISED FLOOR
- SD D — SMOKE DETECTOR, DUCT MOUNTED
- T — TEST SWITCH
- HD — HEAT DETECTOR
- FS — FLOW SWITCH
- TS — TAMPER SWITCH
- PS — PRESSURE SWITCH
- AV — FIRE ALARM AUDIO-VISUAL ANNUNCIATOR
- V — VISUAL ANNUNCIATOR
- DH — MAGNETIC DOOR HOLDER
- FD — FIRE FIGHTERS PHONE JACK

### SITE UTILITY

- MHF1 — MANHOLE NUMBER 1; CMH-INDICATES COMMUNICATIONS MANHOLE.
- PB — PULLBOX OR HANDHOLE AS SPECIFIED ON DRAWINGS AND SPECIFICATIONS.
- PP — POWER POLE
- POLE MOUNTED TRANSFORMERS
- TB — TELEPHONE TERMINAL BOX
- AP — AERIAL PRIMARY
- AS — AERIAL SECONDARY
- AT — AERIAL TELEPHONE; CATV = CABLE TELEVISION.
- UP — UNDERGROUND PRIMARY
- US — UNDERGROUND SECONDARY
- UT — UNDERGROUND TELEPHONE/COMMUNICATIONS

### DISTRIBUTION

- MOLDED CASE CIRCUIT BREAKER
- DRAWOUT POWER CIRCUIT BREAKER AIR, VACUUM OR SF AS SPEDIFIED.
- DISCONNECT SWITCH
- FUSIBLE DISCONNECT SWITCH
- TRANSFORMER
- SHEILDED ISOLATION TRANSFORMER
- VM — VOLTMETER
- AM — AMMETER
- VS — VOLTMETER SELECTOR SWITCH
- AS — AMMETER SELECTOR SWITCH
- ST — SHUNT TRIP
- M — CT AND METER

## ABBREVIATIONS

| | | | | |
|---|---|---|---|---|
| | | | MDP | MAIN DISTRIBUTION PANEL |
| | | | MECH | MECHANICAL |
| | | | MH | METAL HALIDE |
| A | AMPERE(S) | | MIN | MINIMUM |
| AC | ABOVE COUNTER | | MLO | MAIN LUGS ONLY |
| A/C | AIR CONDITIONING | | MTD | MOUNTED |
| AIC | AMPERE INTERRUPTING CAPACITY | | MTG | MOUNTING |
| AFF | ABOVE FINISHED FLOOR | | MV | MERCURY VAPOR |
| AFG | ABOVE FINISHED GRADE | | MW | MICROWAVE |
| AHU | AIR HANDLING UNIT | | NA | NOT APPLICABLE |
| AL , ALUM | ALUMINUM | | NC | NORMALLY CLOSED |
| ATS | AUTOMATIC TRANSFER SWITCH | | NF | NONFUSIBLE |
| AWG | AMERICAN WIRE GAUGE | | NL | NIGHT LIGHT |
| BLDG | BUILDING | | NO | NORMALLY OPEN |
| C | CONDUIT | | OC | ON CENTER |
| CB | CIRCUIT BREAKER | | OFCI | OWNER FURNISHED CONTRACTOR INSTALLED |
| CCTV | CLOSED CIRCUIT TELEVISION | | OH | OVERHEAD |
| CFCI | CONTRACTOR FURNISHED, CONTRACTOR INSTALLED | | P | POLE |
| CKT | CIRCUIT | | PA | PUBLIC ADDRESS |
| COND | CONDUCTOR | | PB | PUSHBUTTON |
| CPU | CENTRAL PROCESSING UNIT | | PBX | PRIVATE BUILDING EXCHANGE |
| CT | CURRENT TRANSFORMER | | PC | PULL CHAIN |
| DCP | DATA COLLECTION PANEL | | P/C | PHOTO CELL |
| DIA | DIAMETER | | PDP | POWER DISTRIBUTION PANEL |
| DC | DISCONNECT | | PH , Ø | PHASE |
| DIST | DISTRIBUTION | | PNL | PANELBOARD |
| DN | DOWN | | PR | PAIR |
| DWGS | DRAWINGS | | PSI | POUNDS PER SQUARE INCH |
| EC | EMPTY CONDUIT | | PWR | POWER |
| EF | EXHAUST FAN | | QUAD | QUAD RECEPTACLE |
| EQMT | EQUIPMENT | | REFR | REFRIGERATOR |
| EWC | ELECTRIC WATER COOLER | | S | SECURITY |
| EXH | EXHAUST | | S.C. | SPLIT CIRCUIT |
| EXP | EXPLOSION PROOF | | SCC | STATUS COMMAND CENTER |
| EXTG | EXISTING | | SN | SOLID NEUTRAL |
| F/A , F.A. | FIRE ALARM | | SQFT. | SQUARE FOOT |
| FLUOR | FLUORESCENT | | SPD | SURGE PROTECTIVE DEVICE |
| FN | FULL NEUTRAL | | SW | SWITCH |
| FT | FEET, FOOT | | SWBD | SWITCHBOARD |
| GALV | GALVANIZED | | TC | TIME CLOCK |
| GFCI | GROUND FAULT CIRCUIT INTERRUPTER | | TELE | TELEPHONE |
| GFI | GROUND FAULT INTERRUPTER | | TSTAT | THERMOSTAT |
| GND | GROUND | | TV | TELEVISION |
| GRD | GALVANIZED RIGID STEEL | | TVSS | TRANSIENT VOLTAGE SURGE SUPPRESSOR |
| HID | HIGH INTENSITY DISCHARGE | | UC | UNDERGROUND COMMUNICATIONS |
| HP | HORSEPOWER | | UE | UNDERGROUND ELECTRICAL |
| HOA | HAND OFF AUTOMATIC | | UON | UNLESS OTHERWISE NOTED |
| HPS | HIGH PRESSURE SODIUM | | UT | UNDERGROUND TELEPHONE |
| HVAC | HEATING/VENTILATING/AIR CONDITIONING | | UPS | UNINTERRUPTABLE POWER SUPPLY |
| HZ | HERTZ | | V | VOLT(S) |
| ID | INSIDE DIAMETER | | VEND | VENDING |
| IG | ISOLATED GROUND | | VP | VAPOR PROOF |
| IMC | INTERMEDIATE STEEL CONDUIT | | W | WIRE , WATT(S) |
| IN | INCHES | | WP | WEATHERPROOF |
| INCD | INCANDESCENT | | XFMR | TRANSFORMER |
| JB | JUNCTION BOX | | XPD | TRANSPONDER |
| KV | KILOVOLT | | Y | WYE |
| KVA | KILOVOLT AMPERE | | Z | IMPEDANCE |
| KVAC | KILOVOLT AMPERE CAPACTIVE | | Δ | DELTA |
| KVAR | KILOVOLT AMPERE REACTIVE | | 1P | ONE POLE |
| KW | KILOWATT | | 2P | TWO POLE |
| KWH | KILOWATT HOUR | | 3P | THREE POLE |
| LPS | LOW PRESSURE SODIUM | | | |
| MAX | MAXIMUM | | | |
| MCB | MAIN CIRCUIT BREAKER | | | |
| MCC | MOTOR CONTROL CENTER | | | |

STATE OF TEXAS
T. L. DAWSEY
66035
PROFESSIONAL ENGINEER
04/09/2021

CLEARY ZIMMERMANN ENGINEERS
Firm No. F-9357 | ClearyZimmermann.com

FORD POWELL &CARSON
Architects & Planners, Inc.
Architecture
Planning
Preservation
Interior Design
1138 East Commerce Street
San Antonio, Texas 78205
210/226-1246
92706

TEXAS PARKS & WILDLIFE

SOUTH LLANO RIVER STATE PARK
HEADQUARTERS BUILDING RENOVATION AND EXPANSION
PROJECT NUMBER: 134245

DATE: 04.09.2021
DESIGNED BY: TD
DRAWN BY: DD
REVIEWED BY: TD
REVISED:
REVISED:
REVISED:

CONSTRUCTION DOCUMENTS

SHEET TITLE
ELECTRICAL SYMBOLS AND ABBREVIATIONS

SHEET NUMBER
E000

PATH: V:\17045\Elec\17045 – E000.dwg

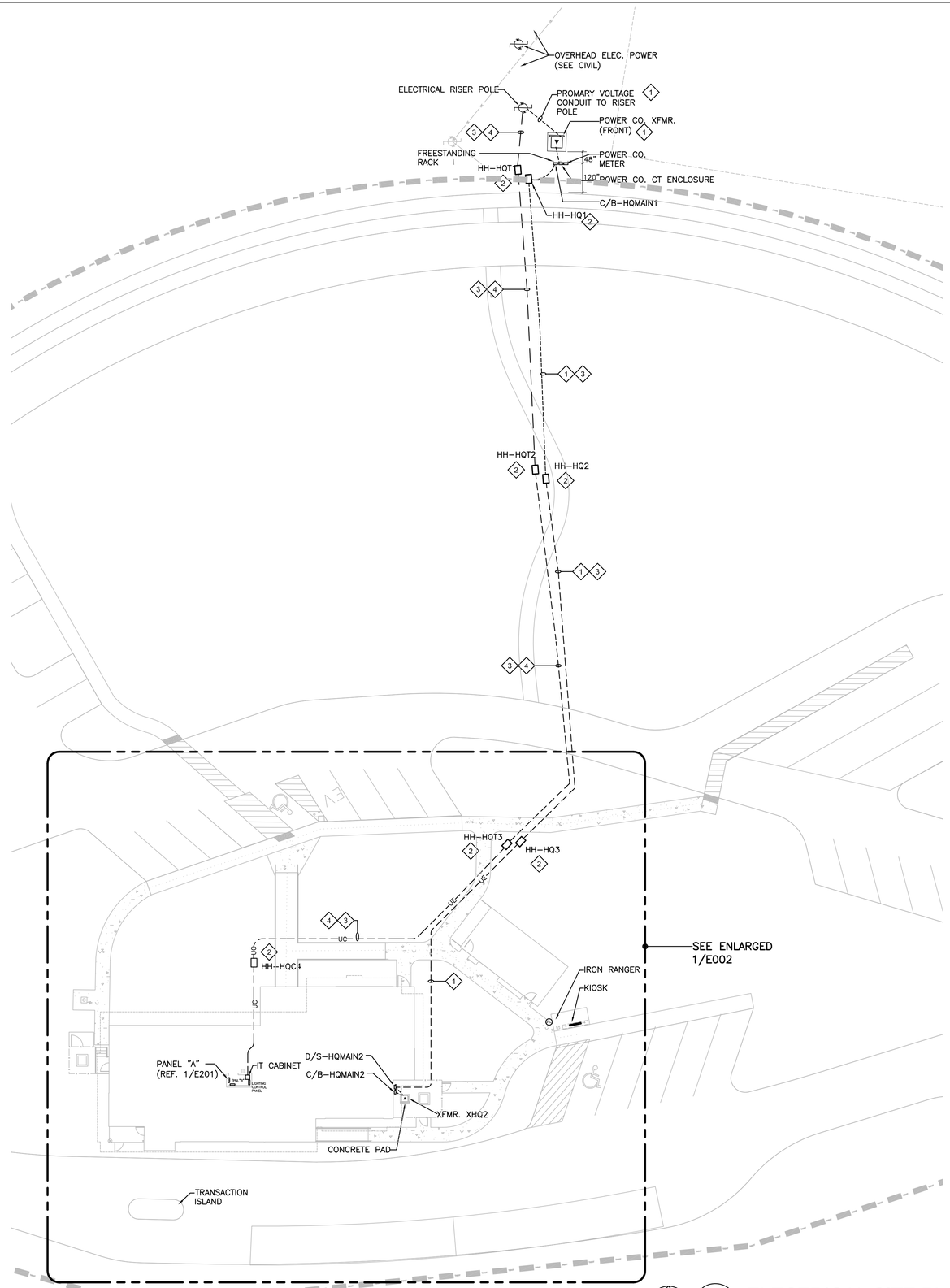


KEYED NOTES:

1. REF. 1/E401.
2. 24"X36"X24"D AASHTO H-20 SOLID BOTTOM HANDHOLE WITH BOLT-ON COVER AND "ELECTRICAL" EMBOSSED.
3. PROVIDE DETECTABLE WARNING TAPE HALF-WAY BETWEEN U.G. CONDUIT AND GRADE.
4. TWO 4"C (COMM).
5. REF. 1/E201.

PLAN NORTH

1 / E001 ELECTRICAL SITE PLAN

SCALE: 1" = 20'-0"

0 10' 20' 40' 60' 80'

SCALE: 1"=20'-0"

TEXAS PARKS & WILDLIFE

# SOUTH LLANO RIVER STATE PARK
## HEADQUARTERS BUILDING RENOVATION AND EXPANSION
PROJECT NUMBER: 134245

STATE OF TEXAS
T. L. DAWSEY
66035
PROFESSIONAL ENGINEER
04/09/2021

CLEARY ZIMMERMANN ENGINEERS
Firm No. F-9357 | ClearyZimmermann.com

FORD POWELL &CARSON Architects & Planners, Inc.
Architecture
Planning
Preservation
Interior Design
1138 East Commerce Street
San Antonio, Texas 78205
210/226-1246
92706

DATE: 04.09.2021
DESIGNED BY: TD
DRAWN BY: DD
REVIEWED BY: TD
REVISED:
REVISED:
REVISED:

CONSTRUCTION DOCUMENTS

SHEET TITLE
SITE PLAN

SHEET NUMBER
E001

PATH: V:\17045\Elec\17045 - E001-E002.dwg

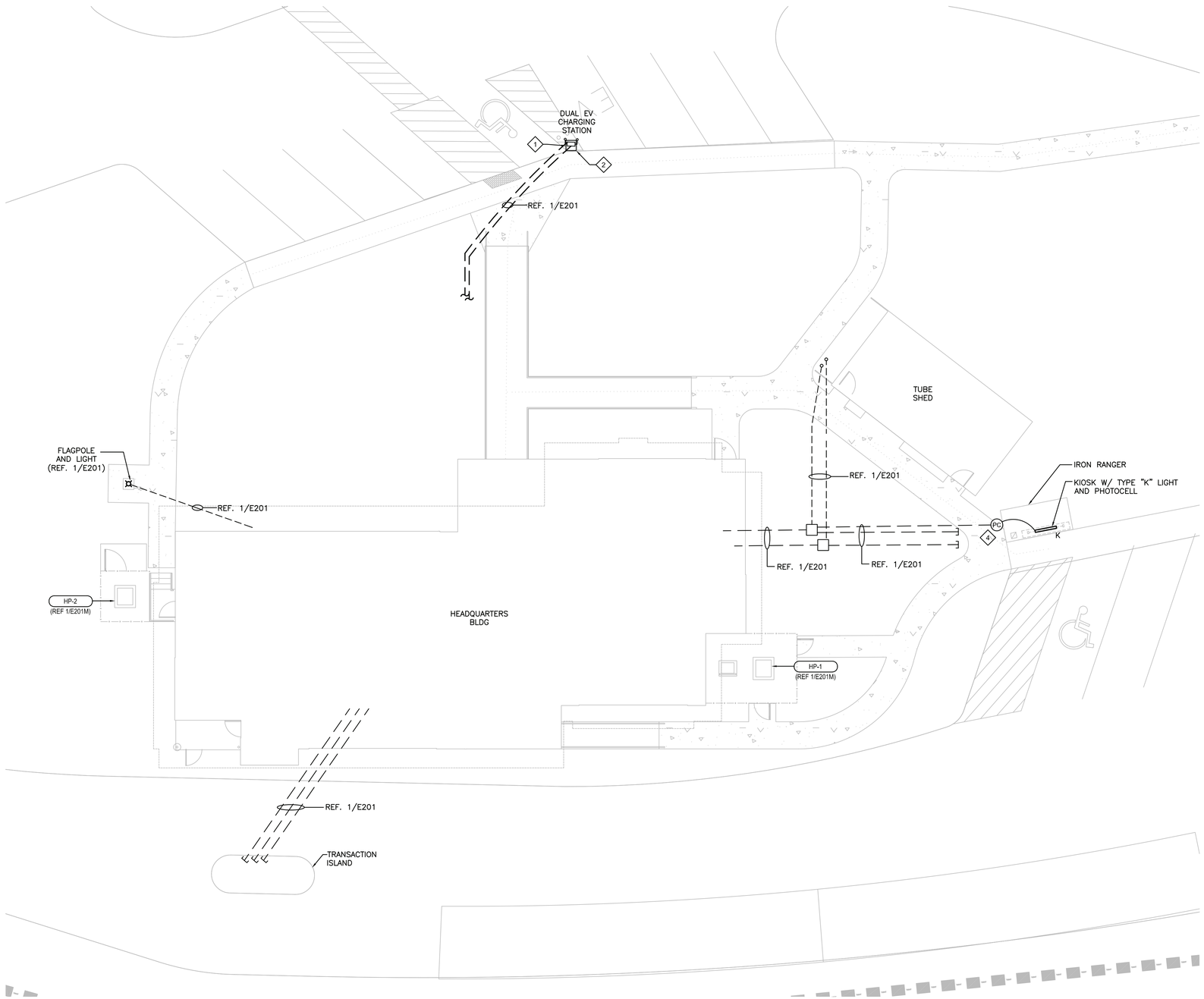


PLAN NORTH

1 / E002 ENLARGED ELECTRICAL SITE PLAN

SCALE: 1" = 10'-0"

KEYED NOTES:

1. DUAL PORT EV CHARGING STATION SHALL CHARGEPOINT MODEL CT4025 OR EQUAL AND SHALL INCLUDE 5 YEAR CELLULAR CONNECTION, 5 YEAR PARTS AND LABOR WARRANTY, POWER MANAGEMENT KIT, BOLLARD MOUNTING KIT, STATION ACTIVATION AND CONFIGURATION SERVICES, INTEGRAL GATEWAY MODEM, FACTORY VALIDATION SERVICES, OWNER-SELECTED CUSTOM SIGNAGE AND VIDEO CONTENT, INSTALLATION, ACTIVATION AND ACCESSORIES AND SERVISES AS NEEDED FOR A COMPLETE AND FUNCTIONING INSTALLATION.
2. 24" X 24" X 36"D CONCRETE BASE FOR EV CHARGING STATION. TOP OF BASE SHALL EXTEND 1/2" ABOVE ADJACENT SIDEWALK. LOCATE CONDUIT STUB UP ACCORDING TO MANUFACTURER SPECIFICATION.
3. REF. 1/E201.
4. PROVIDE A NEW TORK #2101 (OR EQUIVALENT BY OTHER MFGR) PHOTOCELL ON KIOSK FOR CONTROL OF KIOSK LIGHT. FIELD-COORDINATE LOCATION OF PHOTOCELL WITH OWNER.

0 10' 20' 40' 60' 80'

SCALE: 1"=20'-0"

STATE OF TEXAS
T. L. DAWSEY
66035
PROFESSIONAL ENGINEER

04/09/2021

CLEARY ZIMMERMANN ENGINEERS

Firm No. F-9357 | ClearyZimmermann.com

FORD POWELL &CARSON Architects & Planners, Inc.

Architecture
Planning
Preservation
Interior Design

1138 East Commerce Street
San Antonio, Texas 78205
210/226-1246
92706

TEXAS PARKS & WILDLIFE

SOUTH LLANO RIVER STATE PARK
HEADQUARTERS BUILDING RENOVATION AND EXPANSION
PROJECT NUMBER: 134245

DATE: 04.09.2021
DESIGNED BY: TD
DRAWN BY: DD
REVIEWED BY: TD
REVISED:
REVISED:
REVISED:

CONSTRUCTION DOCUMENTS

SHEET TITLE
SITE PLAN
ENLARGED
ELECTRICAL

SHEET NUMBER
E002

PATH: V:\17045\Elec\17045 - E001-E002.dwg

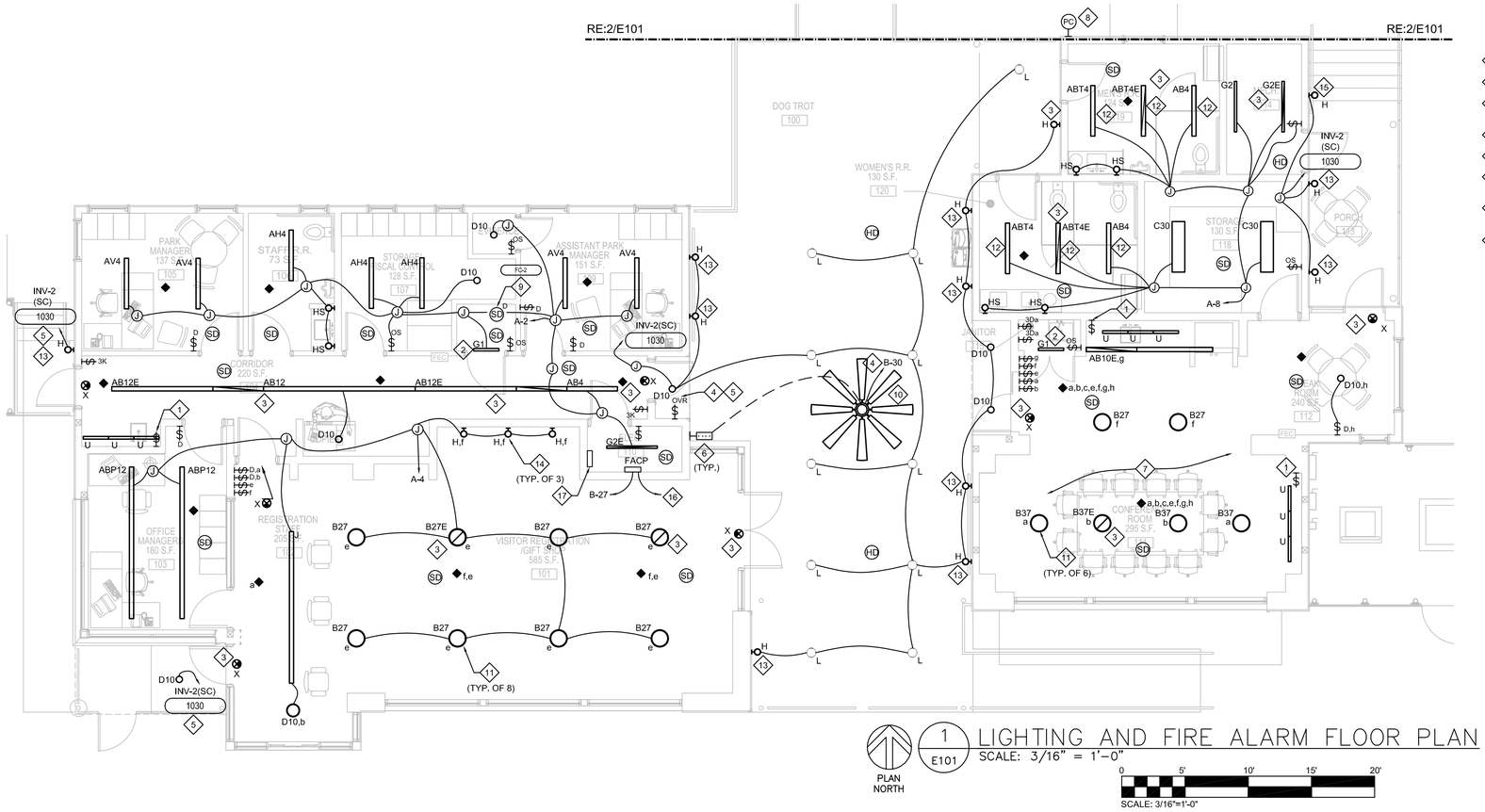


1 E101 LIGHTING AND FIRE ALARM FLOOR PLAN
SCALE: 3/16" = 1'-0"

GENERAL NOTES:

1. ALL EXIT SIGNS SHALL BE CONNECTED TO CIRCUIT A-18.

KEYED NOTES:

1. SWITCH FOR ADJACENT UNDERCABINET LIGHTING.
2. WALL-MOUNT LIGHTING FIXTURE ABOVE DOOR FRAME.
3. CONNECT TO THE UNSWITCHED HOT OF THE CIRCUIT SERVING NORMAL LIGHTS IN THE SAME SPACE.
4. REF. 1/E601.
5. PROVIDE NAMEPLATE READING "EGRESS LIGHTS".
6. HIGH-MEDIUM-LOW-OFF CEILING FAN CONTROLLER COMPATIBLE WITH FAN.
7. LIGHTS IN THIS SPACE SHALL BE CONNECTED TO A-10 UNLESS INDICTED OTHERWISE.
8. INSTALL TOP OF PHOTOCELL AT THE SAME ELEVATION AS THE TOP OF THE FRAME OF THE ADJACENT WINDOW. REF. 1/E601.
9. RETURN DUCT SMOKE DETECTOR SHALL BE INTERLOCKED, BY A RELAY, WITH MECHANICAL STARTER FOR SHUT-OFF. REFER TO MECHANICAL DRAWINGS FOR MORE INFORMATION.
10. CEILING FAN (NO LIGHT KIT) = BIG ASS FANS ISIS (8').
11. COORDINATE WITH FIXTURE MFG TO HAVE FIXTURE STEM CUT TO ALLOW BOTTOM OF FIXTURE TO BE 144" A.F.F.
12. COORDINATE WITH FIXTURE MFG TO HAVE FIXTURE STEM CUT TO ALLOW BOTTOM OF FIXTURE TO BE 120" A.F.F.
13. LOCATE THE CENTER OF THE TYPE "H" SCONCE AT 86.5" A.F.F.
14. LOCATE THE CENTER OF THE TYPE "H" SCONCE AT 120" A.F.F.
15. LOCATE THE CENTER OF THIS "H" FIXTURE TO BE AT THE SAME ELEVATION AS THE ADJACENT "H" FIXTURE.
16. 1"C WITH TWO TELEPHONE LINES TO THE COMM. CABINET IN THIS ROOM.
17. INSTALL INVERTER AND LIGHTING CONTACTORS HIGH ON WALL ABOVE PANEL "A". COORDINATE WITH OTHER TRADES FOR BRACING OF THE WALL TO SUPPORT THE WEIGHT. REF. 1/E601.

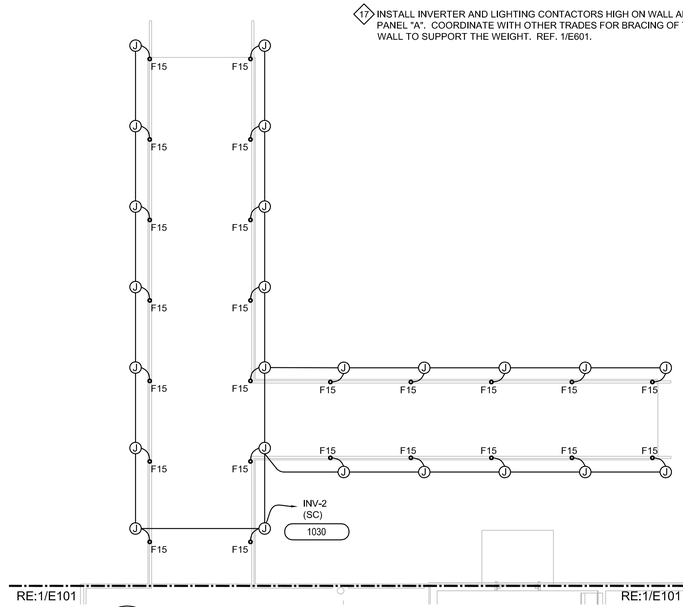


2 E101 LIGHTING FOOT BRIDGE PLAN
SCALE: 3/16" = 1'-0"

# LIGHTING FIXTURE SCHEDULE (HQ)

| MARK | MANUFACTURER/MODEL | DIMENSION | LAMPS | MOUNTING | FIXTURE VA | VOLTAGE | LUMENS | TEMP | DESCRIPTION | KEYED NOTES |
|---|---|---|---|---|---|---|---|---|---|---|
| AB*/AB*E | FINELITE #HP-4-1D-35-F-120-SC-1D-C4-OBO | 4"H x 4" x LENGTH | LED | RECESSED | 4.6W/LF | 120V | 104 L/W | 3500 | RECESSED LINEAR. | |
| ABP* | FINELITE #HP-4R-B-835-F-120-SC-XX-OBD | 4"H x 4" x LENGTH | LED | RECESSED | 7.1W/LF | 120V | 102 L/W | 3500 | RECESSED LINEAR W/ PHOTOCELL. | |
| ABT*/ABT*E | FINELITE #HP-4-ID-S-B-835-WSOTG-F-120V-FA-FE-SC-C4-OBO | 4.75"H x 4" x LENGTH | LED | AIRCRAFT CABLE | 8.1W/LF | 120V | 112 L/W | 3500 | DIRECT/INDIRECT, WIDE UP, OCC SENSOR. | 8 |
| AH*/AH*E | FINELITE #HP-4R-H-835-F-120-SC-XX | 4"H x 4" x LENGTH | LED | RECESSED | 7.1W/LF | 120V | 102 L/W | 3500 | RECESSED LINEAR FIXTURE. | |
| AV*/AV*E | FINELITE #HP-4R-V-835-F-120-SC-XX | 4"H x 4" x LENGTH | LED | RECESSED | 9.3W/LF | 120V | 101 L/W | 3500 | RECESSED LINEAR FIXTURE. | |
| B15/B15E | SPECTRUM #PRDDH16LEDGV-15L-35K-DS10X-FS-HSM-PR16-DR16-PC-XX-HMLC | 20.9" H x 16.2" DIA | LED | PENDANT | 10 W | 120V | 1273 | 3500 | PRISMATIC CLEAR, OPEN BOTTOM. | 4, 6 |
| B27/B27E | SPECTRUM #PRDDH16LEDGV-27L-35K-DS10X-FS-HSM-PR16-DR16-PC-XX-HMLC | 20.9" H x 16.2" DIA | LED | PENDANT | 18 W | 120V | 2700 | 3500 | PRISMATIC CLEAR, OPEN BOTTOM. | 4, 6 |
| B37/B37E | SPECTRUM #PRDDH16LEDGV-37L-35K-DS10X-FS-HSM-PR16-DR16-PC-XX-HMLC | 20.9" H x 16.2" DIA | LED | PENDANT | 26 W | 120V | 3099 | 3500 | PRISMATIC CLEAR, OPEN BOTTOM. | 4, 6 |
| C30/C30E | LITHONIA #TL4-30L-FW-A12-EZ1-LP835 | 12" x 48" x 5" | LED | RECESSED | 30 W | 120V | 3211 | 3500 | LED LENSED TROFFER. | |
| D10 | LITHONIA #LDN6-35/10-LO6-AR-LSS-MVOLT-GZ10 | 6" DIA | LED | RECESSED | 12.8 W | 120V | 1000 | 3500 | RECESSED DOWNLIGHT. | |
| F13 | SPECTRUM #SDT3XT-13L-35K-MD-DS101-1-CP13-PMXX-XX-LN | 3" (TWO) | LED | PENDANT | 9.1 W | 120V | 1000 | 3500 | 3" DUAL SURFACE TRACKLIGHT. | 4 |
| F15 | BEGA #88 671 | 5"x4"x4"x1.125" | LED | IN-GRADE | 1.0 | 24V DC | 24 | 3000 | RECESSED WALKWAY LIGHT AT FOOTBRIDGE | |
| FP | FLAGPOLE WAREHOUSE #208361 (120V INPUT, -SILVER) | 8" DIA | LED | 3.5" SLIPFITTER | 8W | 120V | 500 | 3000 | FLAG POLE LIGHT. | 1 |
| G1 | LITHONIA #ZL1D-L24-SMR-1500LM-FST-MVOLT-35K-80CRI-CS93W-WH | 2.3" x 24" | LED | WALL | 17 W | 120V | 2030 | 3500 | 24" STRIPLIGHT. | |
| G2/G2E | LITHONIA #ZL1D-L48-SMR-3000LM-FST-MVOLT-35K-80CRI-CS93W-WH | 2.3" x 48" | LED | PENDANT | 30 W | 120V | 3966 | 3500 | 48" STRIPLIGHT. | 4 |
| H | SPECTRUM LIGHTING #C0455XT-10L-35K-XW-EX-CR-SO-WM3-MW | 6.5" x 6.5" x 8.25" | LED | WALL | 9.1W | 120V | 1000 | 3500 | CYLINDER SCONCE. | 2 |
| HS | G LIGHTING #GL-6541-B-CC-R5-COLOR-A | 6" x 4" 5" H | LED | WALL | 13 | 120V | 956 | 3500 | CYLINDER SCONCE. | 2 |
| J | FLUXWERX #VU1-B-B-C-35-12-XX-F2-M-XX-G | 1.5" x 4.5" x 12' | LED | PENDANT | 87 | 120V | 8550 | 3500 | I-BEAM FORM, EDGE LEDs, 80% DOWN / 20% UP, DIMMABLE. | 4, 7 |
| K | ILLUMINA #BS101LED-ECO-4-HT-LO-WT35-120-SM-SS | 49.5" x 4.7" x 5" | LED | SURFACE | 34W | 120V | 3481 | 3500 | KIOSK LIGHT, WET. | |
| L | SPECTRUM #C0455XT-10L-35K-XW-EX-CR-SM-COLOR | 4.5" DIA x 5.25" | LED | SURFACE | 10W | 120V | 773 | 3500 | CYLINDER. | |
| M | LITHONIA #FEM-L48-4000LM-LPACL-MD-MVOLT-GZ10-40K-80CRI-MHHK120-FEMDPMB | 51"X11"X6.8" | LED | PENDANT | 24 | 120V | 29 | 4000 | SUSPENDED IN TUBE SHED | |
| N | LITHONIA #WDGE1LED-P1-40K-80CRI-VW-MVOLT-SRM-DDBXD | 9"X5.5"X1.5" | LED | SURFACE | 10 | 120 | 1229 | 4000 | SURFACE - TUBE SHED - VENDING | |
| U | LITHONIA #UCLD-24IN-35K-90CRI-BN | 3.75" x 1" x 24.25" | LED | SURFACE | 13 | 120V | 740 | 3500 | UNDERCABINET, BRUSHED NICKEL. | |
| X | LITHONIA #LQM-S-W-3-R-120/277-EL N-SD | 7.75" x 11.75" x 2" | LED | UNIVERSAL | 1 | 120V | N/A | N/A | EXIT SIGN, NI-CAD BATT. | 5 |

GENERAL NOTES:

A. ALL FIXTURES SHALL BE SPEC GRADE UNLESS OTHERWISE NOTED.
B. ALL TOGGLE SWITCHES TO BE MOUNTED AT HEIGHTS TO COMPLY WITH ADA GUIDELINES UNLESS OTHERWISE NOTED.
C. LIGHTING FIXTURES SHALL BE COORDINATED WITH THE CEILING TYPE PRIOR TO ORDERING. ALL FIXTURES SHALL BE SUPPLIED WITH APPROVED MOUNTING DEVICES, HANGERS, MOUNTING FRAMES, AND TRIM FOR PROPER INSTALLATION IN THE CEILING OR SOFFIT SYSTEM BEING PROVIDED ON THIS PROJECT REGARDLESS OF THE CATALOG NUMBER. REFER TO ARCHITECTURAL REFLECTIVE CEILING PLAN/ELEVATIONS FOR ADDITIONAL MOUNTING INFORMATION.
D. ALL FIXTURES THAT HAVE A "E" SUFFIX ARE BATTERY BACK-UP. (EXAMPLE 'C1E'). ALL EMERGENCY BATTERY PACKS TO BE 1400 LUMEN FULL OUTPUT.
E. PROVIDE REMOTE BATTERY PACKS FOR FIXTURES IN HARD OR NON-ACCESSIBLE CEILINGS. MOUNT PACKS OVER ACCESSIBLE SPACES. REMOTE MOUNT BALLASTS/BATTERY PACKS ABOVE ACCESSIBLE CEILINGS FOR FIXTURES IN THE TOP OF STAIRWELLS.
F. ALL REMOTE BATTERY PACKS AND BALLASTS TO BE MOUNTED ON PLYWOOD BACKBOARD SECURED TO METAL WALL CHANNEL RACK. DO NOT MOUNT DIRECTLY TO WALL. GROUP TOGETHER.
G. ALL FIXTURES THAT HAVE A "D" SUFFIX SHALL BE DIMMABLE DOWN TO 1% OF FULL LIGHT AND HAVE SUITABLE CONTROLS AND DRIVERS.
H. ASTERISK "*" DENOTES LENGTH OF FIXTRURE. REFER TO ARCHITECTURAL RCP FOR EXACT LENGTH.

KEYED NOTES:

1. COORDINATE WITH POLE MANUFACTURER TO HAVE HAVE WIRES TO FIXTURE HEAD SUFFICIENT LONG TO REACH POLE BASE HANDHOLE PLUS HAVE 24" OF COLIED SLACK. REFER TO ARCHITECT FOR POLE SPECIFICATION.
2. BOTTOM OF WALL-MOUNTED LIGHTS SHALL BE AS SHOWN ON ARCHITECTURAL DRAWINGS BUT NOT LESS THAN 84" AFF FOR TAS REQUIREMENTS. ADVISE ENGINEER OF CONFLICTS BEFORE ROUGH-IN.
3. POLE SHALL BE STRAIGHT ROUND STEEL, 10'-0" TALL, HAVE BASE HAND HOLE, COLOR MATCHING THAT OF HEAD, AND INSTALLED ON CONCRETE BASE.
4. REFER TO ARCHITECTURAL DRAWINGS FOR THE EXACT LOCATION AND ELEVATION OF PENDANT-MOUNTED LIGHTS. ADJUST STEM LENGTH AS REQUIRED.
5. REFER TO LIGHTING PLANS FOR WHETHER THE SIGN SHALL BE SINGLE-FACE, DOUBLE-FACE, AND HAVE ARROWS.
6. PROVIDE #EMEN12W REMOTE BATTERY WITH ENCLOSURE FOR FIXTURES SHOWN TO FOR EMERGENCY EGRESS. INSTALL TO STRUCTURER IN NEAREST ACCESSIBLE CEILING SPACE.
7. COORDINATE FIXTURE CEILING PROVISONS WITH CEILING TYPE.
8. PROVIDE EMERGENCY MODELS WITH THE NEEDED INTERNAL BATTERY PACK.

TEXAS PARKS & WILDLIFE

SOUTH LLANO RIVER STATE PARK
HEADQUARTERS BUILDING RENOVATION AND EXPANSION
PROJECT NUMBER: 134245

STATE OF TEXAS
T. L. DAWSEY
66035
LICENSED PROFESSIONAL ENGINEER
04/09/2021

CLEARY ZIMMERMANN ENGINEERS
Firm No. F-9357 | ClearyZimmermann.com

FORD POWELL & CARSON
Architects & Planners, Inc.
Architecture
Planning
Preservation
Interior Design
1138 East Commerce Street
San Antonio, Texas 78205
210/226-1246
92706

DATE: 04.09.2021
DESIGNED BY: TD
DRAWN BY: DD
REVIEWED BY: TD
REVISED:
REVISED:
REVISED:

SHEET TITLE
LIGHTING AND FIRE ALARM PLAN

SHEET NUMBER
E101

CONSTRUCTION DOCUMENTS

PATH: V:\17045\Elec\17045 - E101.dwg

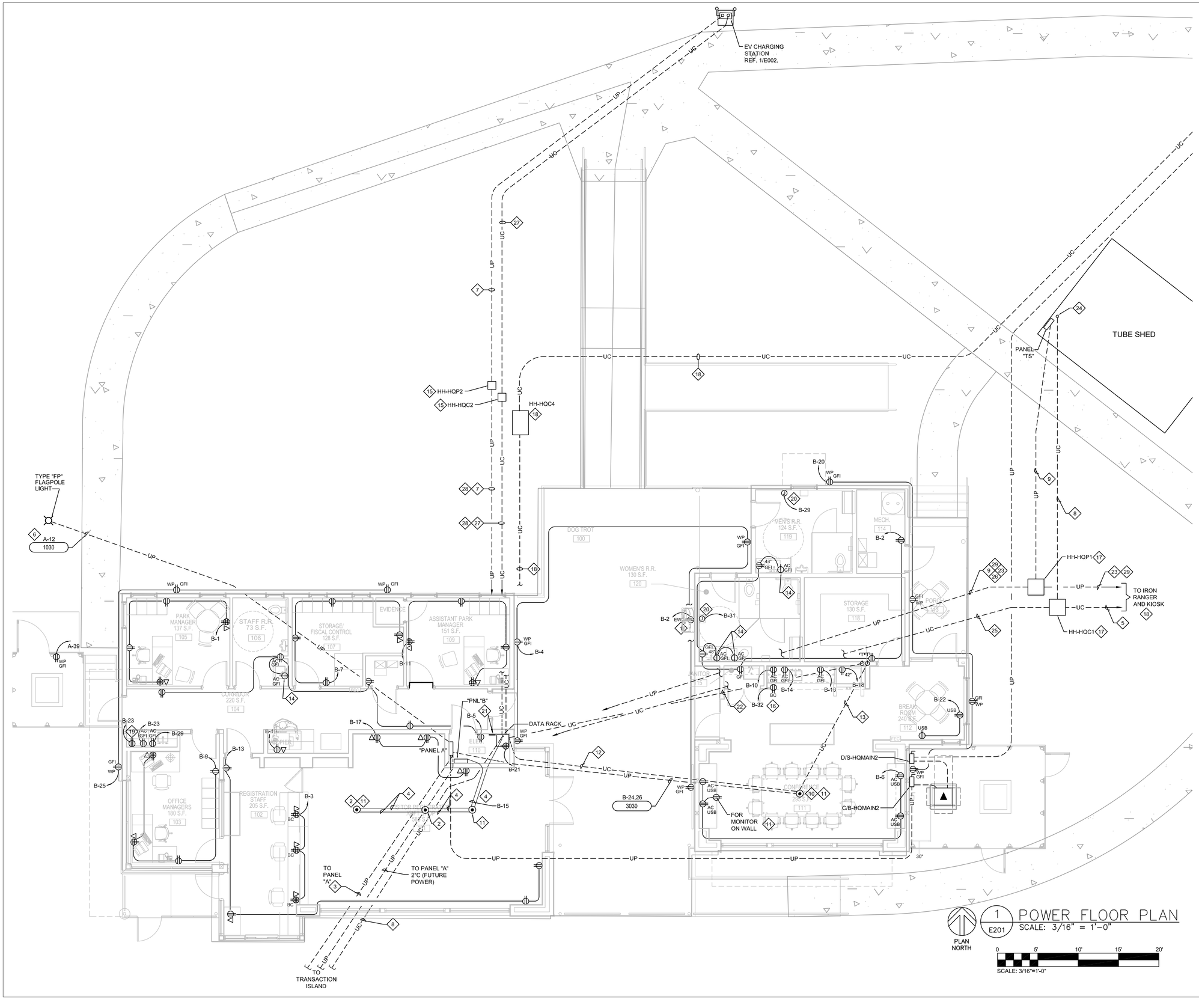


KEYED NOTES:

1. EWC. PROVIDE WITH A GFI-TYPE CIRCUIT BREAKER.
2. TWO-COMPARTMENT (POWER, COMM.) CAST IRON FLOOR BOX, BRASS COVER, ONE NEMA 5-20R DUPLEX RECEPTACLE, AND FACEPLATE FOR ONE FUTURE SINGLE-GANG DATA DEVICE.
3. EMPTY SPARE (WITH PULL TAPE) 1" C FOR FUTURE POWER.
4. PROVIDE ONE(1) 3/4" CONDUIT FOR POWER AND ONE(1) 1.25"C FOR DATA.
5. 2"C (COMM) TO AREA NEAR IRON RANGER FOR FUTURE ATM.
6. REFER TO 1/E601.
7. 1.25"C, 4#6, #8 GND (A-31,33,35,37) TO EV CHARGING STATION.
8. EMPTY SPARE (WITH PULL TAPE) 2"C TO DATA RACK FOR FUTURE COMM.
9. 2"C, 3#2, #4 GND (A-32, 34).
10. FOUR-COMPARTMENT (POWER, POWER, COMM., AV) CAST IRON FLOOR BOX, BRASS COVER, TWO NEMA 5-20R DUPLEX RECEPTACLES, AND TWO FACEPLATES FOR TWO FUTURE SINGLE-GANG ADIO-VISUAL DEVICES.
11. FIELD VERIFY EXACT LOCATION WITH OWNER BEFORE ROUGH-IN.
12. 1.25"C TO DATA RACK.
13. 1.25"C STUBOUT FROM FLOOR BOX TO ABOVE ACCESSIBLE CEILING FOR FUTURE AUDIO-VISUAL
14. PROVIDE GFI TYPE SIMPLEX RECEPTACLE BELOW SINK FOR ELECTRONIC FAUCET. COORDINATE LOCATION WITH OTHER TRADES BEFORE ROUGH-IN.
15. 12"x12"x12"D HANDHOLE, TIER 15, BOLT-ON COVER AND "ELECTRICAL" OR "COMMUNICATION" EMBOSSED.
16. COORDINATE RECEPTACLE LOCATION WITH BELOW COUNTER DISHWASHER.
17. 24"x24"x12"D HANDHOLE, TIER 15, BOLT-ON COVER AND "ELECTRICAL" OR "COMMUNICATION" EMBOSSED.
18. REF. 1/E001.
19. COORDINATE RECEPTACLE LOCATION WITH BELOW COUNTER REFRIGERATOR.
20. REFER TO SHEET A603 FOR HAND DRYER LOCATION PRIOR TO ROUGH-IN.
21. REFER TO SHEETS E401 AND E601 FOR GROUND BAR INFORMATION.
22. TWO 1.25"C FROM STUBOUTS BELOW DATA RACK TO ABOVE ACCESSIBLE CEILING IN STORAGE 118 FOR COMM. USE.
23. EMPTY (WITH PULL TAPE) 2"C (FUTURE POWER) TO AREA NEAR IRON RANGER FOR FUTURE ATM.
24. STUB AND CAP CONDUIT 6"AFF.
25. THREE 2"C (TUBE SHED, IRON RANGER, SPARE).
26. EMPTY (WITH PULL TAPE) 2"C FOR SPARE.
27. 1.25"C (COMM) WITH PULL TAPE TO EV CHARGING STATION.
28. EMPTY (WITH PULL TAPE) SPARE 1.25"C
29. 1"C, 2 #10, #10 GND (A-14) TO KIOSK LIGHT.

STATE OF TEXAS
T. L. DAWSEY
66035
PROFESSIONAL ENGINEER
04/09/2021

CLEARY ZIMMERMANN ENGINEERS
Firm No. F-9357 | ClearyZimmermann.com

FORD POWELL &CARSON
Architects & Planners, Inc.
Architecture
Planning
Preservation
Interior Design
1138 East Commerce Street
San Antonio, Texas 78205
210/226-1246
92706

TEXAS PARKS & WILDLIFE

# SOUTH LLANO RIVER STATE PARK
## HEADQUARTERS BUILDING RENOVATION AND EXPANSION
PROJECT NUMBER: 134245

DATE: 04.09.2021
DESIGNED BY: TD
DRAWN BY: DD
REVIEWED BY: TD
REVISED:
REVISED:
REVISED:

SHEET TITLE
POWER PLAN

SHEET NUMBER
E201

CONSTRUCTION DOCUMENTS

PATH: V:\17045\Elec\17045 – E201.dwg

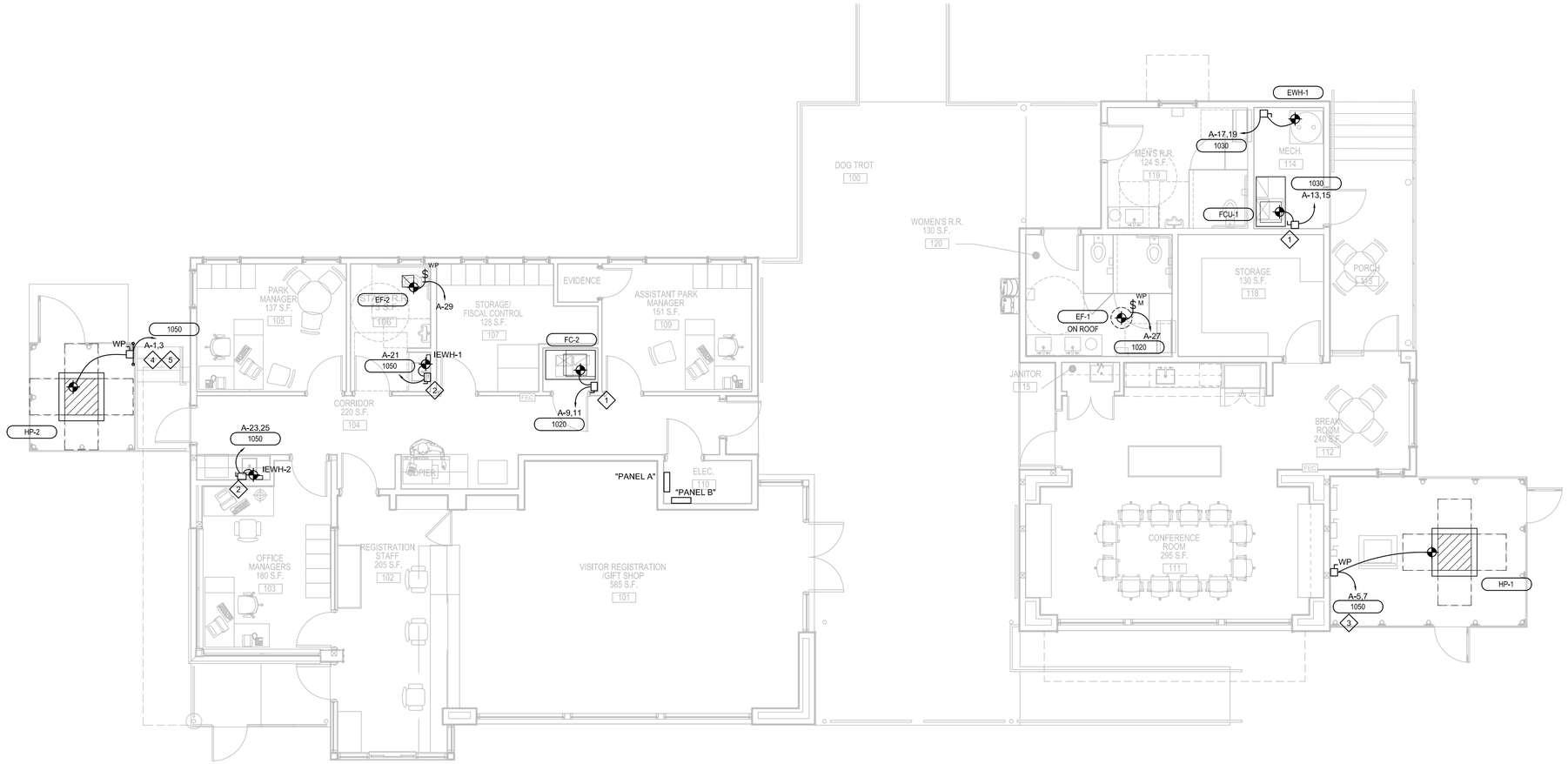


KEYED NOTES:

1. DISCONNECT SWITCH: 30A/240V/2P/NEMA 1/NF.
2. DISCONNECT SWITCH: 60A/2400V/2P/NEMA 1/NF.
3. DISCONNECT SWITCH: 30A/240V/2P/NEMA 3R/NF.
4. DISCONNECT SWITCH: 60A/600V/2P/NEMA 3R/NF.
5. PROVIDE FREESTANDING RACK WITH TWO CONCRETE BASES THAT ARE 8" DIAMETER BY 24" DEEP.

PLAN NORTH

1 / E201M MECHANICAL POWER FLOOR PLAN

SCALE: 3/16" = 1'-0"

0 5' 10' 15' 20'

SCALE: 3/16"=1'-0"

STATE OF TEXAS
T. L. DAWSEY
66035
LICENSED PROFESSIONAL ENGINEER
04/09/2021

CLEARY ZIMMERMANN ENGINEERS

Firm No. F-9357 | ClearyZimmermann.com

FORD POWELL &CARSON Architects & Planners, Inc.

Architecture
Planning
Preservation
Interior Design

1138 East Commerce Street
San Antonio, Texas 78205
210/226-1246
92706

TEXAS PARKS & WILDLIFE

SOUTH LLANO RIVER STATE PARK
HEADQUARTERS BUILDING RENOVATION AND EXPANSION
PROJECT NUMBER: 134245

DATE: 04.09.2021
DESIGNED BY: TD
DRAWN BY: DD
REVIEWED BY: TD
REVISED:
REVISED:
REVISED:

CONSTRUCTION DOCUMENTS

SHEET TITLE
MECHANICAL POWER FLOOR PLAN

SHEET NUMBER
E201M

PATH: V:\17045\Elec\17045 - E201M.dwg

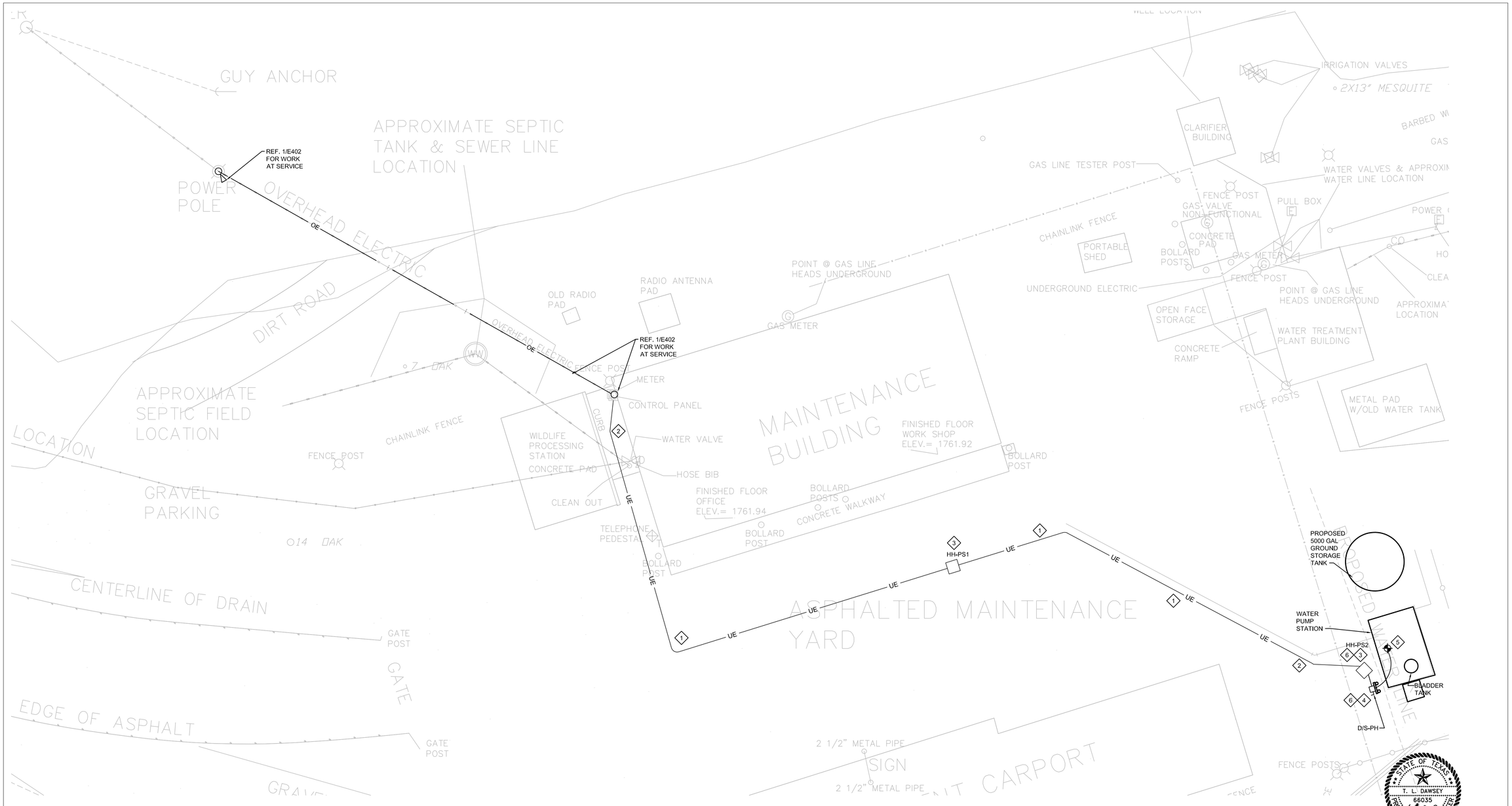


PLAN NORTH

1 / E202 PUMP STATION POWER PLAN

SCALE: 1/8" = 1'-0"

0 5' 10' 20'

SCALE: 1/8"=1'-0"

KEYED NOTES:

1. ROUTE UNDERGROUND ELECTRICAL CONDUIT IN PROPOSED WATER LINE TRENCH. REF. 1/E402
2. EXTEND TRENCH AS REQUIRED TO CONNECT TO NEW ELECTRICAL DISCONNECT.
3. 24"x24"X24"D AASHTO H-20 SOLID BOTTOM HANDHOLE WITH BOLT-ON COVER AND "ELECTRICAL" EMBOSSED.
4. REF. 1/E402 FOR RACK-MOUNTED EQUIPMENT.
5. COORDINATE WITH PUMP STATION MFGR. FOR THE EXACT LOCATION OF CONDUIT TURN-UP BELOW CONTROL PANEL BEFORE ROUGH-IN. REF. SHEET E203.
6. FIELD COORDINATE EXACT LOCATION OF UNDERGROUND GAS AND WATER PIPING.

STATE OF TEXAS
T. L. DAWSEY
66035
PROFESSIONAL ENGINEER

04/09/2021

CLEARY ZIMMERMANN ENGINEERS

Firm No. F-9357 | ClearyZimmermann.com

FORD POWELL &CARSON Architects & Planners, Inc.

Architecture
Planning
Preservation
Interior Design

1138 East Commerce Street
San Antonio, Texas 78205
210/226-1246
92706

TEXAS PARKS & WILDLIFE

# SOUTH LLANO RIVER STATE PARK
## HEADQUARTERS BUILDING RENOVATION AND EXPANSION
PROJECT NUMBER: 134245

DATE: 04.09.2021
DESIGNED BY: TD
DRAWN BY: DD
REVIEWED BY: TD
REVISED:
REVISED:
REVISED:

CONSTRUCTION DOCUMENTS

SHEET TITLE
PUMP STATION POWER PLAN

SHEET NUMBER
E202

PATH: V:\17045\Elec\17045 – E202.dwg

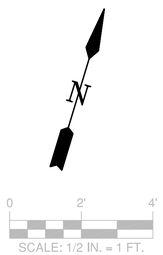


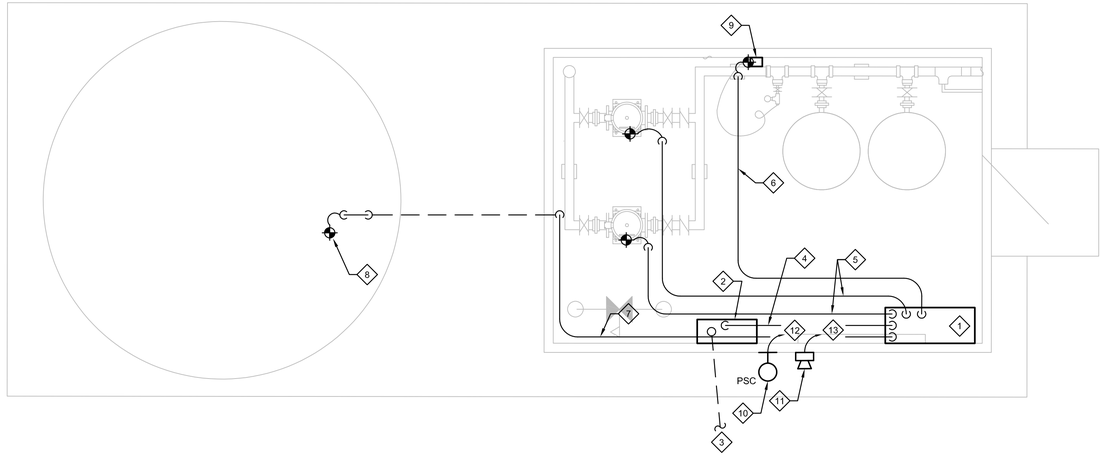


1 E203 PUMP STATION POWER AND CONTROLS PLAN
SCALE: 1/2" = 1'-0"

KEYED NOTES:

1. BOOSTER PUMP CONTROL PANEL. RE: SHEET E-602 FOR DETAILS.
2. PANEL "PH ". RE: SHEET E-501 FOR PANEL SCHEDULE.
3. RE: SHEET E-202 FOR CONTINUATION.
4. 2"C-3#1/0,1#6G. (BOOSTER PUMP CONTROL PANEL FEEDER)
5. 1"C-3#10,1#10G. (BOOSTER PUMP FEEDER)
6. 3/4"C-4#14 (PRESSURE SWITCHES TO BOOSTER PUMP CONTROL PANEL)
7. 3/4"C-4#14 (LOW LEVEL PUMP STOP, LOW LEVEL RESET, HIGH LEVEL ALARM TO BOOSTER PUMP CONTROL PANEL)
8. TANK LEVEL ELECTRODE HOLDER. RE: SHEET E-602 FOR INSTALLATION DETAIL.
9. DOMESTIC WATER PRESSURE SWITCHES. RE: DETAIL SHEET E-601.
10. GENERAL ALARM LIGHT. MOUNT AT 8'-0" AFG.
11. GENERAL ALARM HORN. MOUNT AT 8'-0" AFG.
12. 3/4"C-2#14 (GENERAL ALARM LIGHT TO BOOSTER PUMP CONTROL PANEL)
13. 3/4"C-2#14 (GENERAL ALARM HORN TO BOOSTER PUMP CONTROL PANEL)

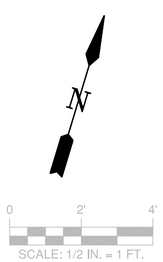


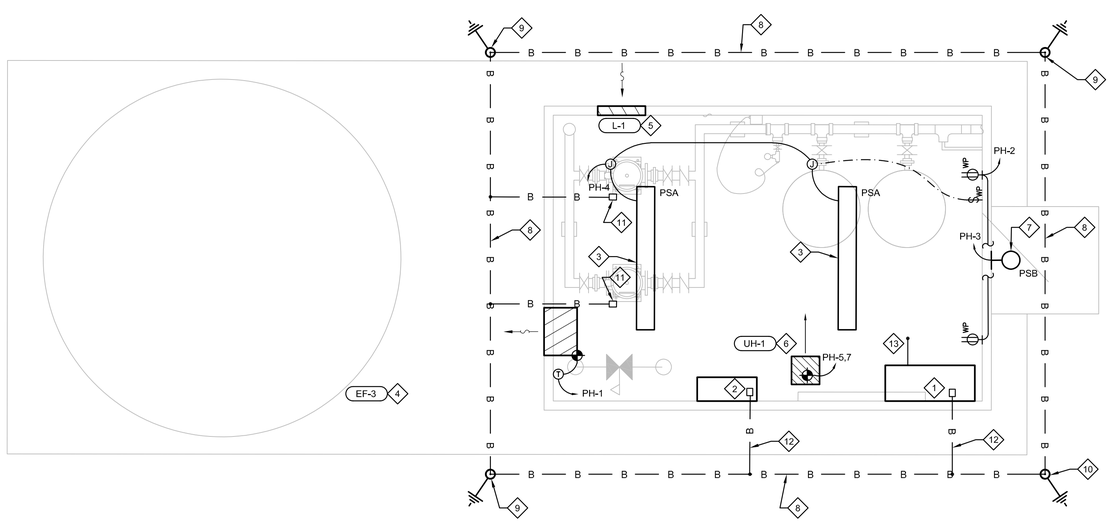


2 E203 PUMP STATION LIGHTING AND HVAC PLAN
SCALE: 1/2" = 1'-0"

KEYED NOTES:

1. BOOSTER PUMP CONTROL PANEL. RE: SHEET E-602 FOR DETAILS.
2. PANEL "PH ". RE: SHEET E-501 FOR PANEL SCHEDULE.
3. CHAIN HANG FIXTURES AT 8'-0" AFF.
4. INSTALL WALL-MOUNTED EXHAUST FAN EF-3 AT 7'-6" AFF.
5. INSTALL WALL-MOUNTED LOUVER AT 7'-6" AFF.
6. INSTALL UNIT HEATER AT 7'-0" AFF W/ MANUFACTURER'S STANDARD WALL-MOUNT HARDWARE.
7. INSTALL FIXTURE AT 8'-6" AFF.
8. #4/0, SD, BARE COPPER CABLE BURIED MIN. 18" BELOW GRADE (TYPICAL FOR ALL BELOW GRADE GROUND CABLES). EXOTHERMICALLY WELD ALL BELOW GRADE CONNECTIONS.
9. 3/4"Øx10' COPPER CLAD GROUND ROD (TYP.). EXOTHERMICALLY WELD TO GROUND CABLE BURIED MIN. 18" BELOW GRADE.
10. REFER TO GROUNDING SYSTEM TEST WELL INSTALLATION DETAIL SHEET E-601.
11. EQUIPMENT TO GROUND MAT CONNECTION (TYP.). REFER TO EQUIPMENT TO GROUND MAT CONNECTION DETAIL SHEET E-601.
12. EXTEND #4/0 UP INTO PANEL AND GROUND TO GROUND BUS.
13. REFER TO 1/E402 FOR GROUNDING TO RE-BAR.

STATE OF TEXAS
T. L. DAWSEY
66035
PROFESSIONAL ENGINEER
04/09/2021

CLEARY ZIMMERMANN ENGINEERS
Firm No. F-9357 | ClearyZimmermann.com

FORD POWELL &CARSON
Architects & Planners, Inc.
Architecture
Planning
Preservation
Interior Design
1138 East Commerce Street
San Antonio, Texas 78205
210/226-1246
92706

TEXAS PARKS & WILDLIFE

SOUTH LLANO RIVER STATE PARK
HEADQUARTERS BUILDING RENOVATION AND EXPANSION
PROJECT NUMBER: 134245

DATE: 04.09.2021
DESIGNED BY: TD
DRAWN BY: DD
REVIEWED BY: TD
REVISED:
REVISED:
REVISED:

CONSTRUCTION DOCUMENTS

SHEET TITLE
PUMP STATION POWER PLAN

SHEET NUMBER
E203

PATH: V:\17045\Elec\17045 - E203.dwg

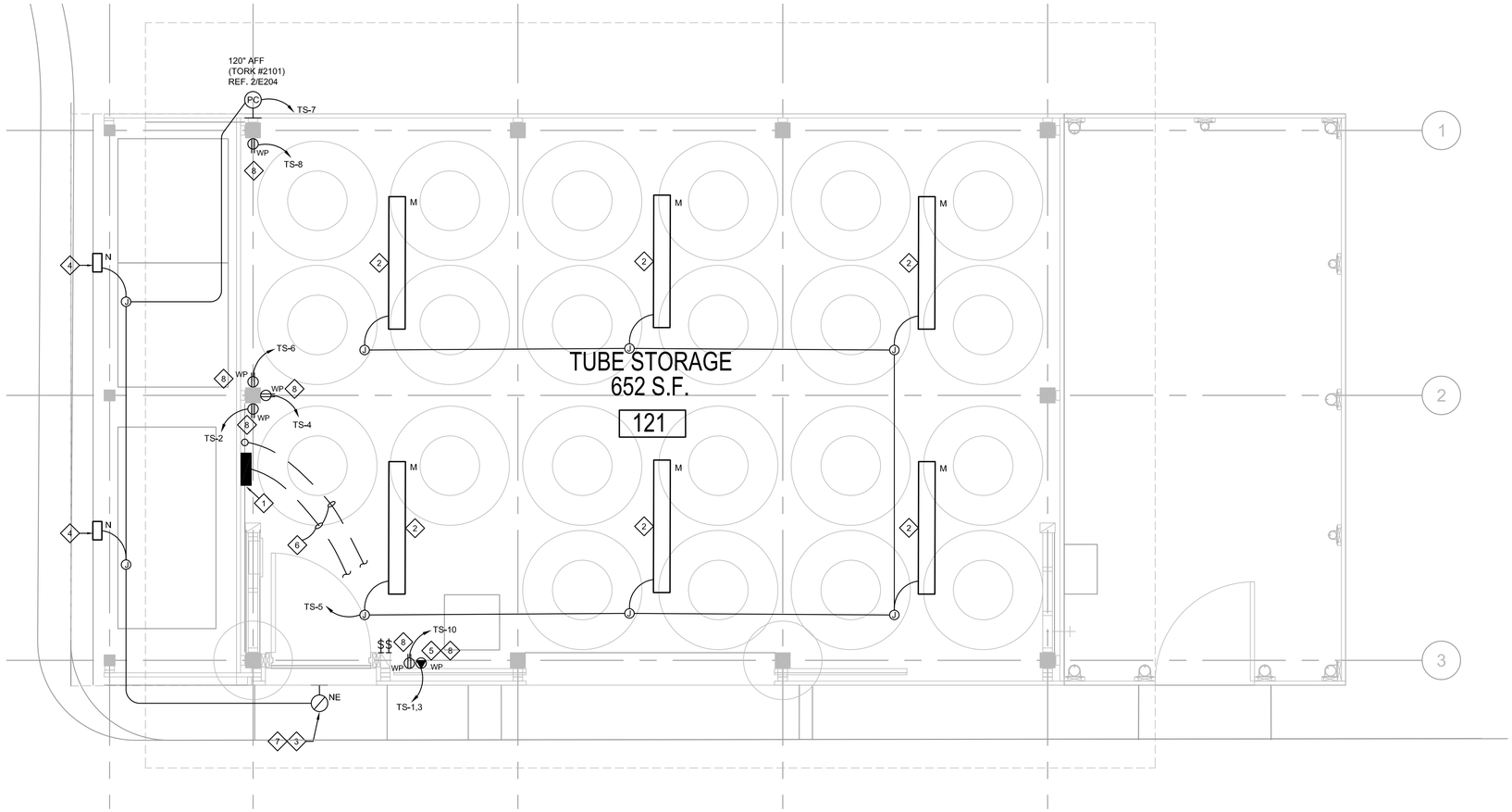


PLAN NORTH

1 / E203 TUBE SHED ELECTRICAL PLAN
SCALE: 1/2" = 1'-0"

KEYED NOTES:

1. PANEL "TS". RE: SHEET E-501 FOR PANEL SCHEDULE.
2. CHAIN HANG FIXTURES AT 8'-0" AFF.
3. INSTALL FIXTURE AT 8'-6" AFF.
4. MOUNT LIGHTING FIXTURE TO VERTICAL REAR FACE OF STRUCTURAL CROSSMEMBER.
5. COORDINATE RECEPTACLE NEMA CONFIGURATION WITH OWNER FURNISHED/OWNER INSTALLED AIR COMPRESSOR. 2 #8, #10 GND, 3/4"C TO CIRCUIT BREAKER.
6. REFER TO SHEET E002 FOR CONTINUATION.
7. THIS LIGHTING FIXTURE SHALL BE PROVIDED UNSWITCHED HOT FOR BATTERY, SWITCHED HOT FROM PHOTOCELL, NEUTRAL, AND GROUND LEADS.
8. PROVIDE NAMEPLATE ON RECEPTACLE READING: "ON GFCI C/B."

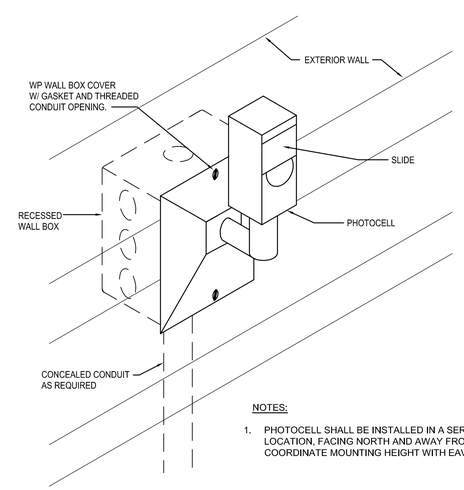


NOTES:

1. PHOTOCELL SHALL BE INSTALLED IN A SERVICEABLE LOCATION, FACING NORTH AND AWAY FROM DIRECT LIGHT. COORDINATE MOUNTING HEIGHT WITH EAVE.

2 / E204 PHOTOCELL MOUNTING DETAIL
NOT TO SCALE

STATE OF TEXAS
T. L. DAWSEY
66035
LICENSED PROFESSIONAL ENGINEER
04/09/2021

CLEARY ZIMMERMANN ENGINEERS
Firm No. F-9357 | ClearyZimmermann.com

FORD POWELL &CARSON Architects & Planners, Inc.
Architecture
Planning
Preservation
Interior Design
1138 East Commerce Street
San Antonio, Texas 78205
210/226-1246
92706

TEXAS PARKS & WILDLIFE

SOUTH LLANO RIVER STATE PARK
HEADQUARTERS BUILDING RENOVATION AND EXPANSION
PROJECT NUMBER: 134245

DATE: 04.09.2021
DESIGNED BY: TD
DRAWN BY: DD
REVIEWED BY: TD
REVISED:
REVISED:
REVISED:

CONSTRUCTION DOCUMENTS

SHEET TITLE
TUBE SHED PLAN - ELECTRICAL

SHEET NUMBER
E204

PATH: V:\17045\Elec\17045 - E204.dwg

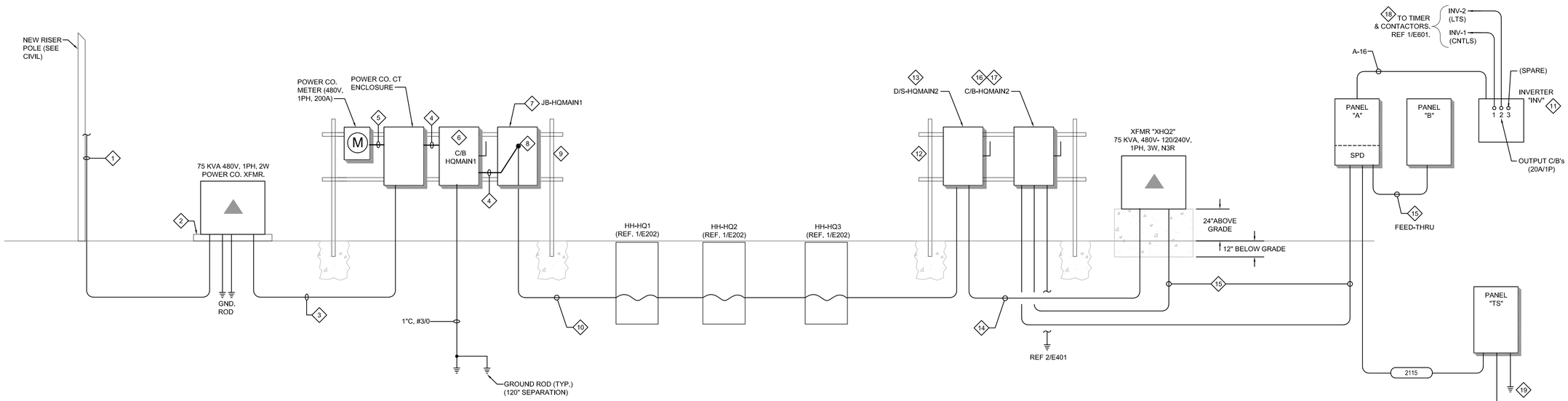


1 E401 ONE-LINE DIAGRAM- HEADQUARTERS
NOT TO SCALE

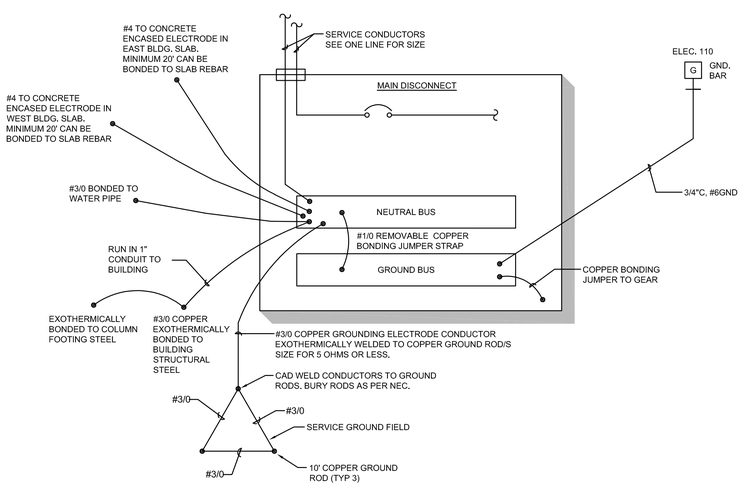


2 E401 GROUNDING AND BONDING DETAIL
SCALE: N.T.S.

KEYED NOTES:

1. 3"C. WITH PRIMARY VOLTAGE CABLES FROM POWER CO.
2. PROVIDE CONCRETE HOUSEKEEPING PER POWER CO. REQUIREMENTS.
3. 2"C, 2 #3/0.
4. 2"C, 2 #3/0, #4 GND.
5. 1.25"C. WITH METER WIRING.
6. C/B-HQMAIN1 = 480V, 2P, 25KAIC, NEMA 3R, HD, SERVICE DUTY, ENCLOSED CIRCUIT BREAKER.
7. JB-HQMAIN1 = 30"Hx24"Wx8"D, NEMA 3R, SCREW COVER.
8. PROVIDE THREE (PHASE, PHASE, GND) FACTORY "IN/OUT" STYLE CONNECTORS (NSI IPLMD #250-4).
9. FREESTANDING RACK WITH THREE SUPPORT POLES EACH IN A 8" DIA x 36"D CONCRETE BASE.
10. TWO 2"C EACH WITH 2 #4/0, #1/0 GND.
11. INVERTER "INV" = 550VA, 120V(IN)/120V(OUT), 90-MINUTE VLRA BATTERIES, UL924 LISTED AND SELF-TESTING AND DIAGNOSTIC, INPUT FUSE PROTECTION, THREE OUTPUT 20A/1P C/Bs, NORMALLY "ON", SUMMARY ALARM FORM "C" CONTACT, WALL MOUNTED (MYERS #LV-550-R-1-B2003 OR EQUIVALENT).
12. FREESTANDING RACK WITH TWO SUPPORT POLES EACH IN A 8" DIA x 36"D CONCRETE BASE.
13. D/S-HQMAIN2 = 480V, 200A, 2P+GND, HD, NF, N3R.
14. 2"C, 2 #4/0, #4 GND.
15. 3"C, THREE 500 KCM, #1/0 GND.
16. C/B-HQMAIN2 = 400A, 240V, 2P, 20KAIC, N3R, SERVICE DUTY, ENCLOSED CIRCUIT BREAKER.
17. PROVIDE NEUTRAL-TO-GROUND BONDING.
18. REF. 1/E601.
19. CONNECT GROUND ROD TO GROUND BAR IN PANEL 'TS'. DO NOT BOND GROUND TO NEUTRAL.
20. PROVIDE 20' #3/0 COPPER EXOTHERMIC BOND CONNECTION TO STEEL REINFORCEMENT IN SLAB AND CONNECT TO GROUND BAR IN PANEL "TS".

STATE OF TEXAS
T. L. DAWSEY
66035
LICENSED PROFESSIONAL ENGINEER
04/09/2021

CLEARY ZIMMERMANN ENGINEERS
Firm No. F-9357 | ClearyZimmermann.com

FORD POWELL &CARSON Architects & Planners, Inc.
Architecture
Planning
Preservation
Interior Design
1138 East Commerce Street
San Antonio, Texas 78205
210/226-1246
92706

TEXAS PARKS & WILDLIFE

SOUTH LLANO RIVER STATE PARK
HEADQUARTERS BUILDING RENOVATION AND EXPANSION
PROJECT NUMBER: 134245

DATE: 04.09.2021
DESIGNED BY: TD
DRAWN BY: DD
REVIEWED BY: TD
REVISED:
REVISED:
REVISED:

CONSTRUCTION DOCUMENTS

SHEET TITLE
ELECTRICAL
ONE-LINE
HEADQUARTERS

SHEET NUMBER
E401

PATH: W:\17045\Elec\17045 - E401.dwg

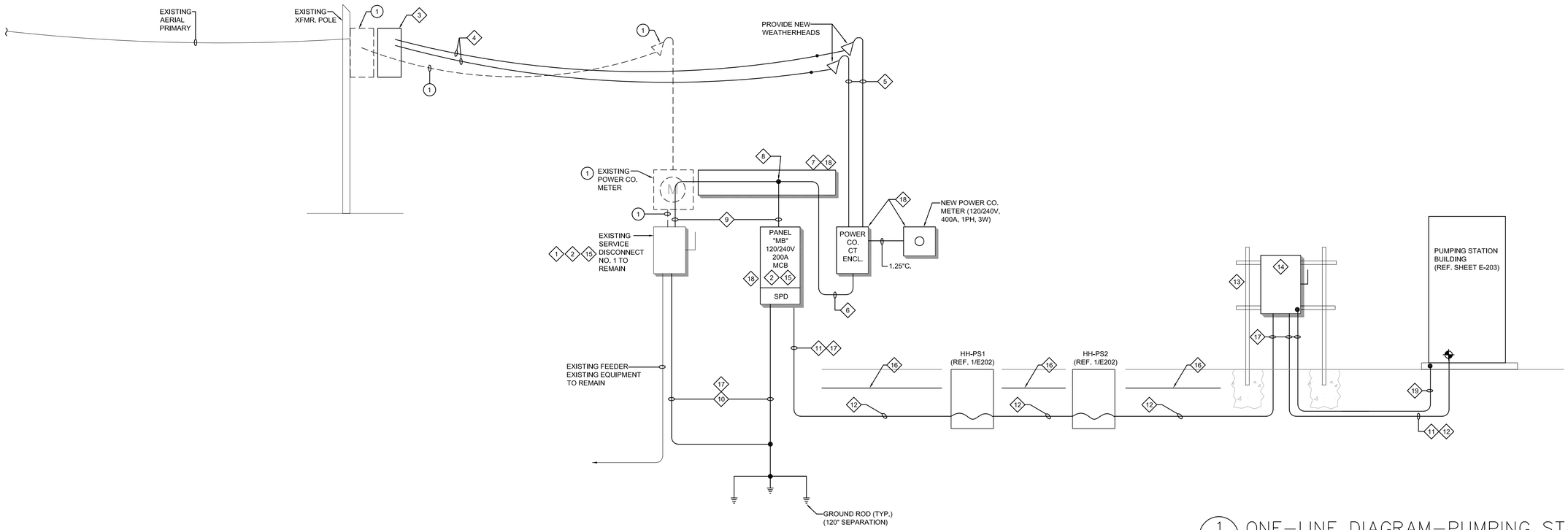


1 / E402 ONE-LINE DIAGRAM-PUMPING STATION
NOT TO SCALE

KEYED NOTES: DEMO

1. COORDINATE WITH POWER COMPANY TO REMOVE THE EXISTING 120/240V, 1 PHASE, 3-WIRE SERVICE TO MAINTENANCE BLDG.

GENERAL NOTES:

1. COORDINATE POWER OUTAGES WITH OWNER NOT LESS THAN TWO WEEKS IN ADVANCE.

KEYED NOTES: NEW WORK

1. EXISTING 240V, 200A, WP SERVICE DISCONNECT TO REMAIN. PLUG OPENING IN TOP FROM DEMOLITION.
2. PROVIDE NAMEPLATE LABELING PER NEC PARAGRAPH 230.2, (E) REQUIREMENTS.
3. NEW 100KVA, 120/240V, 1PH, 3W POWER CO. POLE MTD XFMR.
4. PROVIDE AERIAL CABLE PER POWER COMPANY STANDARD FOR 120/240V, 400A, 1PH, 3-WIRE SERVICE.
5. TWO 2"C. EACH WITH THREE #3/0.
6. TWO 2"C. EACH WITH THREE #3/0 , ONE #1/0 GND.
7. 8"x8"x LENGTH WEATHERPROOF WIREWAY.
8. PROVIDE FACTORY INSULATED CONNECTORS (NSI TYPE IPLD) FOR SPLICING.
9. 2"C, 3 #3/0, #4 GND.
10. #3/0 GEC.
11. 2"C, 3 #2/0, #4 GND.
12. THE TOPS OF HORIZONTAL CONDUIT SHALL BE NOT LESS THAN 24" BELOW GRADE.
13. FREESTANDING RACK WITH TWO 4"C (RIGID STEEL WITH TOP CAPS) SUPPORT POLES EACH IN A 8" DIA x 24"D CONCRETE BASE.
14. 240V, 200A, 2P + GND, NF, N3R, HD.
15. PROVIDE NEUTRAL-TO-GROUND BONDING.
16. PROVIDE DETECTABLE WARNING TAPE 12" BELOW GRADE.
17. EXPOSED CONDUIT AND UNDERGROUND ELBOWS SHALL BE TAPE-WRAPPED RIGID METAL CONDUIT.
18. PROVIDE AN UNISTRUT RACK TO BUILDING FOR MOUNTING NEW EQUIPMENT.
19. PROVIDE 20' #3/0 COPPER EXOTHERMIC BOND CONNECTION TO STEEL REINFORCEMENT IN SLAB AND CONNECT TO GROUND BAR IN D/S-PH.

STATE OF TEXAS
T. L. DAWSEY
66035
LICENSED PROFESSIONAL ENGINEER
04/09/2021

CLEARY ZIMMERMANN ENGINEERS
Firm No. F-9357 | ClearyZimmermann.com

FORD POWELL &CARSON
Architects & Planners, Inc.
Architecture
Planning
Preservation
Interior Design
1138 East Commerce Street
San Antonio, Texas 78205
210/226-1246
92706

TEXAS PARKS & WILDLIFE

SOUTH LLANO RIVER STATE PARK
HEADQUARTERS BUILDING RENOVATION AND EXPANSION
PROJECT NUMBER: 134245

DATE: 04.09.2021
DESIGNED BY: TD
DRAWN BY: DD
REVIEWED BY: TD
REVISED:
REVISED:
REVISED:

CONSTRUCTION DOCUMENTS

SHEET TITLE
ELECTRICAL
ONE-LINE
PUMPING STATION

SHEET NUMBER
E402

PATH: W:\17045\Elec\17045 - E402.dwg

## PANEL "A" (HQ)

| | | | | | |
|---|---|---|---|---|---|
| LOCATION: | ELECTRICAL RM | VOLTAGE: | 120/240 V | KAIC: 20 | BUSSING SHALL BE FULLY RATED |
| MOUNTING: | SURFACE | PHASE: | 1 P / 3W | CODES: | 0=EQPT, 1=RCPT, 2=LTG, 3=A/C, 4=HEAT |
| ENCLOSURE: | NEMA 1 STYLE: NQOD | BUSSING: | 400 A | | 5=CONTINUOUS MOTORS, 6=LRGST MOTOR |
| BRKR MTG: | BOLT-ON (REF: SQUARE D) | MCB: | 400 A | ACCESSORIES: | GROUND BUS, 66 SPACE |
| BREAKERS: | SERIES RATED. 60/75 DEGREE TERMINALS | MLO: | A | | FEED THRU LUGS, INTERGRAL |
| | | | | | SURGE PROTECTIVE DEVICE |

| CODE | BRKR | CIRCUIT USE | CKT | LOAD | A | B | LOAD | CKT | CIRCUIT USE | BRKR | CODE |
|---|---|---|---|---|---|---|---|---|---|---|---|
| 3 | 50/2 | HP-2 | 1 | 3,840 | X | | 595 | 2 | LTG - NW | 20/1 | 2 |
| 3 | | | 3 | 3,840 | | X | 477 | 4 | LTG - SW | 20/1 | 2 |
| 3 | 30/2 | HP-1 | 5 | 2,160 | X | | | 6 | SPARE | 20/1 | |
| 3 | | | 7 | 2,160 | | X | 287 | 8 | LTG - NE | 20/1 | 2 |
| 3 | 15/2 | FCU-2 | 9 | 912 | X | | 293 | 10 | LTG - SE | 20/1 | 2 |
| 3 | | | 11 | 912 | | X | 8 | 12 | FLAG POLE LIGHT | 20/1 | 2 |
| 3 | 15/2 | FCU-1 | 13 | 492 | X | | 34 | 14 | KIOSK LIGHT | 20/1 | 2 |
| 3 | | | 15 | 492 | | X | 550 | 16 | INVERTER POWER FOR EGRESS LTS | 20/1 | 2 |
| 3 | 20/2 | EWH-1 | 17 | 1,500 | X | | 5 | 18 | EXIT SIGNS | 20/1 | 2 |
| 3 | | | 19 | 1,500 | | X | 50 | 20 | LTS - TIMER AND CONTROLS | 20/1 | 2 |
| 4 | 40/1 | IEHW-1 | 21 | 3,000 | X | | | 22 | SPARE | 20/1 | |
| 4 | 40/2 | IEHW-2 | 23 | 3,250 | | X | | 24 | SPARE | 20/1 | |
| 4 | | | 25 | 3,250 | X | | | 26 | SPARE | 20/1 | |
| 3 | 20/1 | EF-1 | 27 | 528 | | X | | 28 | SPARE FOR FUTURE ISLAND POWER | 20/1 | |
| 3 | 20/1 | EF-2 | 29 | 400 | X | | | 30 | SPARE FOR FUTURE MAINT. BLDG | 20/1 | |
| 0 | 40/2 | EV CHARGING STATION #1 (EAST HANDLE) | 31 | 3,120 | | X | | 32 | PANEL "TS" | 100/2 | |
| 0 | | | 33 | 3,120 | X | | | 34 | (IN TUBE SHED) | | |
| 0 | 40/2 | EV CHARGING STATION #1 (WEST HANDLE) | 35 | 3,120 | | X | 1,000 | 36 | BUSSED SPACE RESERVED FOR | | 0 |
| 0 | | | 37 | 3,120 | X | | 1,000 | 38 | FUTURE NORTH TICKET ATM LOADS | | 0 |
| 1 | 20/1 | RCPT - OUTSIDE (WEST) | 39 | 180 | | X | 3,000 | 40 | BUSSED SPACE RESERVED FOR | | 0 |
| | 20/1 | SPARE | 41 | | X | | 3,000 | 42 | FUTURE SOUTH TICKET BOOTH LOADS | | 0 |
| | 20/1 | SPARE | 43 | | | X | | 44 | SPARE | 20/1 | |
| | 20/1 | SPARE | 45 | | X | | | 46 | SPARE | 20/1 | |
| | 20/1 | SPARE | 47 | | | X | | 48 | SPARE | 20/1 | |
| | 20/1 | SPARE | 49 | | X | | | 50 | SPARE | 20/1 | |
| | 20/1 | SPARE | 51 | | | X | | 52 | SPARE | 20/1 | |
| | | BUSSED SPACE | 53 | | X | | | 54 | BUSSED SPACE | | |
| | | BUSSED SPACE | 55 | | | X | | 56 | BUSSED SPACE | | |
| | | BUSSED SPACE | 57 | | X | | | 58 | BUSSED SPACE | | |
| | | BUSSED SPACE | 59 | | | X | | 60 | BUSSED SPACE | | |
| | | BUSSED SPACE | 61 | | X | | | 62 | BUSSED SPACE | | |
| | | BUSSED SPACE | 63 | | | X | | 64 | BUSSED SPACE | | |
| | | BUSSED SPACE | 65 | | X | | | 66 | BUSSED SPACE | | |

| | EQPT VA | RCPT VA | LTG VA | AC/HEAT VA | MOTORS | CONN VA | FTL VA | PANEL VA | PHASE AMP |
|---|---|---|---|---|---|---|---|---|---|
| PHASE A | 11800 | 8480 | 927 | 16754 | 0 | 37961 | | 36412 | 303 |
| PHASE B | 12580 | 8760 | 1372 | 12682 | 0 | 35394 | | 33898 | 282 |
| TOTAL | 24380 | 17240 | 2299 | 29436 | 0 | 73355 | | 70310 | |

| | | | |
|---|---|---|---|
| PANEL DESIGN KVA: | 70.31 | PANEL SUBTOTAL: | 293 AMPS |
| RESERVE CAPACITY KVA: | 14.06 | RESERVE CAPACITY: | 59 AMPS |
| TOTAL KVA: | 84.37 | PANEL DESIGN CURRENT: | 352 AMPS |

## PANEL "B" (HQ)

| | | | | | |
|---|---|---|---|---|---|
| LOCATION: | ELECTRICAL RM | VOLTAGE: | 120/240 V | KAIC: 20 | BUSSING SHALL BE FULLY RATED |
| MOUNTING: | SURFACE | PHASE: | 1 P / 3W | CODES: | 0=EQPT, 1=RCPT, 2=LTG, 3=A/C, 4=HEAT |
| ENCLOSURE: | NEMA 1 STYLE: NQOD | BUSSING: | 400 A | | 5=CONTINUOUS MOTORS, 6=LRGST MOTOR |
| BRKR MTG: | BOLT-ON (REF: SQUARE D) | MCB: | A | ACCESSORIES: | GROUND BUS, 42 SPACE |
| BREAKERS: | SERIES RATED. 60/75 DEGREE TERMINALS | MLO: | 400 A | | |

| CODE | BRKR | CIRCUIT USE | CKT | LOAD | A | B | LOAD | CKT | CIRCUIT USE | BRKR | CODE |
|---|---|---|---|---|---|---|---|---|---|---|---|
| 1 | 20/1 | PARK MANAGER OFFICE | 1 | 1,080 | X | | 180 | 2 | RCPT IN BREEZEWAY (FUT. EWC USE) | 20/1GF | 0 |
| 1 | 20/1 | RECPTION DESK | 3 | 1,080 | | X | 540 | 4 | BREEZEWAY RECEPTS | 20/1 | 1 |
| 1 | 20/1 | STAFF RR, CORR, STG, ELEC RECEPT | 5 | 900 | X | | 720 | 6 | CONFERENCE ROOM WALL RECEPTS | 20/1 | 1 |
| 1 | 20/1 | STORAGE, FISCAL CONTROL | 7 | 720 | | X | | 8 | SPARE | 20/1 | |
| 1 | 20/1 | OFFICE MANAGER RECEPT | 9 | 1,080 | X | | 600 | 10 | ABV CONT RECEPT | 20/1 | 1 |
| 1 | 20/1 | ASSIST MANAGER OFFICE | 11 | 1,080 | | X | 900 | 12 | MEN/WOMEN RR, STG, MECH RECEPT | 20/1 | 1 |
| 1 | 20/1 | GIFT SHOP, RECEPTION RECEPT | 13 | 720 | X | | 600 | 14 | ABV CONT RECEPT | 20/1 | 1 |
| 1 | 20/1 | GIFT SHOP FLOOR BOXES POWER | 15 | 1,080 | | X | 600 | 16 | ABV CONT RECEPT | 20/1 | 1 |
| 1 | 20/1 | GIFT SHOP REEPT | 17 | 540 | X | | 800 | 18 | REFRIGERATOR | 20/1 | 1 |
| 1 | 20/1 | PRINTER | 19 | 900 | | X | 900 | 20 | EXTERIOR RECEPT | 20/1 | 1 |
| 1 | 20/1 | IDF RCPT | 21 | 360 | X | | 360 | 22 | BREAK RM RECEPT | 20/1 | 1 |
| 1 | 20/1 | ABOVE COUNTER RECEPT | 23 | 600 | | X | 180 | 24 | CONFERENCE RM FLOOR BOX | 20/1 | 1 |
| 1 | 20/1 | EXTERIOR RECEPT | 25 | 540 | X | | 180 | 26 | CONFERNCE RM FLOOR BOX | 20/1 | 1 |
| 0 | 20/1 | FIRE ALARM PANEL "FAP" | 27 | 100 | | X | | 28 | SPARE | 20/1 | |
| 0 | 20/1 | HAND DRYER - 119 | 29 | 1,000 | X | | 1,200 | 30 | CEILING FAN (DOG TROT) | 20/1 | 3 |
| 0 | 20/1 | HAND DRYER | 31 | 1,000 | | X | 1,200 | 32 | RCPT - DISH WASHER | 20/1 | 0 |
| | 20/1 | SPARE | 33 | | X | | | 34 | SPARE | 20/1 | |
| | 20/1 | SPARE | 35 | | | X | | 36 | SPARE | 20/1 | |
| | 20/1 | SPARE | 37 | | X | | | 38 | SPARE | 20/1 | |
| | 100/2 | PANEL "TS" | 39 | | | X | | 40 | SPARE | 20/1 | |
| | | | 41 | | X | | | 42 | SPARE | 20/1 | |

| | EQPT VA | RCPT VA | LTG VA | AC/HEAT VA | MOTORS | CONN VA | FTL VA | PANEL VA | PHASE AMP |
|---|---|---|---|---|---|---|---|---|---|
| PHASE A | 1180 | 8480 | 0 | 1200 | 0 | 10860 | | 9105 | 76 |
| PHASE B | 2300 | 8580 | 0 | 0 | 0 | 10880 | | 9105 | 76 |
| TOTAL | 3480 | 17060 | 0 | 1200 | 0 | 21740 | | 18210 | |

| | | | |
|---|---|---|---|
| PANEL DESIGN KVA: | 18.21 | PANEL SUBTOTAL: | 76 AMPS |
| RESERVE CAPACITY KVA: | 3.64 | RESERVE CAPACITY: | 15 AMPS |
| TOTAL KVA: | 21.85 | PANEL DESIGN CURRENT: | 91 AMPS |

## 20 AMP CIRCUIT VOLTAGE DROP

| 120V 20 Amp CONDUCTOR | CONDUIT | MAX ONE WAY LENGTH OF CIRCUIT |
|---|---|---|
| 2 – #12 and 1 – #12 GRD | 3/4" C | 100 Feet |
| 2 – #10 and 1 – #10 GRD | 3/4" C | 160 Feet |
| 2 – #8 and 1 – #8 GRD | 3/4" C | 260 Feet |
| 2 – #6 and 1 – #6 GRD | 1" C | 400 Feet |
| 2 – #4 and 1 – #4 GRD | 1" C | 650 Feet |
| REFER TO NOTES ON DRAWINGS GREATER THAN 650 FEET | | |

| 277V 20 Amp CONDUCTOR | CONDUIT | MAX ONE WAY LENGTH OF CIRCUIT |
|---|---|---|
| 2 – #12 and 1 – #12 GRD | 3/4" C | 220 Feet |
| 2 – #10 and 1 – #10 GRD | 3/4" C | 360 Feet |
| 2 – #8 and 1 – #8 GRD | 1" C | 600 Feet |
| REFER TO NOTES ON DRAWINGS GREATER THAN 600 FEET | | |

Notes:
1) CONTRACTOR SHALL FOLLOW CIRCUIT VOLTAGE DROP CHART DISTANCE FOR SIZING CIRCUITING. CONTRACTOR SHALL UPSIZE CONDUIT AND WIRE BASED UPON ACTUAL FEEDER DISTANCE INSTALLED.
2) SEE FEEDER SCHEDULE FOR ADDITIONAL FEEDER SIZES.
3) PULL IN NYLON PULL CORD WITH CONDUCTORS UP TO 300 FEET, PULL IN MULE TAPE WITH CONDUCTORS OVER 300 FEET.
4) CHART CONDUIT SIZES ARE BASED UPON SINGLE CIRCUITS. CONTRACTOR SHALL UPSIZE CONDUIT AS PER NEC FOR MULTIPLE CIRCUITS. WIRE GAUGE SHALL REMAIN AS PER CHART.

## PANEL "MB"

| | | | | | |
|---|---|---|---|---|---|
| LOCATION: | MAINTENANCE BLDG | VOLTAGE: | 120/240 V | KAIC: 40 | BUSSING SHALL BE FULLY RATED |
| MOUNTING: | SURFACE | PHASE: | 1 P / 3W | CODES: | 0=EQPT, 1=RCPT, 2=LTG, 3=A/C, 4=HEAT |
| ENCLOSURE: | NEMA 3R STYLE: NQOD | BUSSING: | 200 A | | 5=CONTINUOUS MOTORS, 6=LRGST MOTOR |
| BRKR MTG: | BOLT-ON (REF: SQUARE D) | MCB: | 200 A | ACCESSORIES: | GROUND BUS, 42 SPACE |
| BREAKERS: | SERIES RATED. 60/75 DEGREE TERMINALS | MLO: | A | | SERVICE DUTY |

| CODE | BRKR | CIRCUIT USE | CKT | LOAD | A | B | LOAD | CKT | CIRCUIT USE | BRKR | CODE |
|---|---|---|---|---|---|---|---|---|---|---|---|
| | 20/1 | SPARE | 1 | | X | | 8,520 | 2 | PUMPTING STATION | 150/2 | 0 |
| | 20/1 | SPARE | 3 | | | X | 8,520 | 4 | | | 0 |
| | 20/1 | SPARE | 5 | | X | | | 6 | BUSSED SPACE | | |
| | 20/1 | SPARE | 7 | | | X | | 8 | BUSSED SPACE | | |
| | 20/1 | SPARE | 9 | | X | | | 10 | BUSSED SPACE | | |
| | 20/1 | SPARE | 11 | | | X | | 12 | BUSSED SPACE | | |
| | 20/1 | SPARE | 13 | | X | | | 14 | BUSSED SPACE | | |
| | 20/1 | SPARE | 15 | | | X | | 16 | BUSSED SPACE | | |
| | | BUSSED SPACE | 17 | | X | | | 18 | BUSSED SPACE | | |
| | | BUSSED SPACE | 19 | | | X | | 20 | BUSSED SPACE | | |
| | | BUSSED SPACE | 21 | | X | | | 22 | BUSSED SPACE | | |
| | | BUSSED SPACE | 23 | | | X | | 24 | BUSSED SPACE | | |
| | | BUSSED SPACE | 25 | | X | | | 26 | BUSSED SPACE | | |
| | | BUSSED SPACE | 27 | | | X | | 28 | BUSSED SPACE | | |
| | | BUSSED SPACE | 29 | | X | | | 30 | BUSSED SPACE | | |
| | | BUSSED SPACE | 31 | | | X | | 32 | BUSSED SPACE | | |
| | | BUSSED SPACE | 33 | | X | | | 34 | BUSSED SPACE | | |
| | | BUSSED SPACE | 35 | | | X | | 36 | BUSSED SPACE | | |
| | | BUSSED SPACE | 37 | | X | | | 38 | BUSSED SPACE | | |
| | | BUSSED SPACE | 39 | | | X | | 40 | BUSSED SPACE | | |
| | | BUSSED SPACE | 41 | | X | | | 42 | BUSSED SPACE | | |

| | EQPT VA | RCPT VA | LTG VA | AC/HEAT VA | MOTORS | CONN VA | FTL VA | PANEL VA | PHASE AMP |
|---|---|---|---|---|---|---|---|---|---|
| PHASE A | 8520 | 0 | 0 | 0 | 0 | 8520 | | 8520 | 71 |
| PHASE B | 8520 | 0 | 0 | 0 | 0 | 8520 | | 8520 | 71 |
| TOTAL | 17040 | 0 | 0 | 0 | 0 | 17040 | | 17040 | |

| | | | |
|---|---|---|---|
| PANEL DESIGN KVA: | 17.04 | PANEL SUBTOTAL: | 71 AMPS |
| RESERVE CAPACITY KVA: | 3.41 | RESERVE CAPACITY: | 14 AMPS |
| TOTAL KVA: | 20.45 | PANEL DESIGN CURRENT: | 85 AMPS |

## THHN IN EMT SERVICE FEEDER SCHEDULE

| MARK | CONDUIT | CONDUCTORS |
|---|---|---|
| 1020 | 1 – 1/2" Conduit | 2 – #12 and 1 – #12 Ground |
| 1030 | 1 – 3/4" Conduit | 2 – #10 and 1 – #10 Ground |
| 1050 | 1 – 3/4" Conduit | 2 – #8 and 1 – #8 Ground |
| 1065 | 1 – 3/4" Conduit | 2 – #6 and 1 – #8 Ground |
| 1085 | 1 – 1" Conduit | 2 – #4 and 1 – #8 Ground |
| 1100 | 1 – 1" Conduit | 2 – #3 and 1 – #6 Ground |
| 1115 | 1 – 1–1/4" Conduit | 2 – #2 and 1 – #6 Ground |
| 2020 | 1 – 1/2" Conduit | 3 – #12 and 1 – #12 Ground |
| 2030 | 1 – 3/4" Conduit | 3 – #10 and 1 – #10 Ground |
| 2050 | 1 – 3/4" Conduit | 3 – #8 and 1 – #8 Ground |
| 2065 | 1 – 3/4" Conduit | 3 – #6 and 1 – #8 Ground |
| 2085 | 1 – 1" Conduit | 3 – #4 and 1 – #8 Ground |
| 2100 | 1 – 1–1/4" Conduit | 3 – #3 and 1 – #6 Ground |
| 2115 | 1 – 1–1/4" Conduit | 3 – #2 and 1 – #6 Ground |
| 3020 | 1 – 3/4" Conduit | 4 – #12 and 1 – #12 Ground |
| 3030 | 1 – 3/4" Conduit | 4 – #10 and 1 – #10 Ground |
| 3050 | 1 – 3/4" Conduit | 4 – #8 and 1 – #8 Ground |
| 3065 | 1 – 1" Conduit | 4 – #6 and 1 – #8 Ground |
| 3085 | 1 – 1–1/4" Conduit | 4 – #4 and 1 – #8 Ground |
| 3100 | 1 – 1–1/4" Conduit | 4 – #3 and 1 – #6 Ground |
| 3115 | 1 – 1–1/4" Conduit | 4 – #2 and 1 – #6 Ground |

Notes:
1. Wet location (underground or outdoors) use THWN. Otherwise THHN.
2. Conduit Types; underground – schedule 40 PVC; indoors – EMT; outdoor exposed – IMC. Utility – riser poles (follow Utility guidelines or minimum schedule 80).
3. Provide transitions to conduit changes prior to different environment (ex. Transition from EMT to IMC prior to penetrating walls to the exterior).
4. Motor Connections shall be flexible non–metallic conduit for water equipment
5. All conduit penetrations in rated walls shall be firestopped.
6. See drawings for any special requirements.

## PANEL "TS"

| | | | | | |
|---|---|---|---|---|---|
| LOCATION: | TUBE SHED | VOLTAGE: | 120/240 V | KAIC: 10 | BUSSING SHALL BE FULLY RATED |
| MOUNTING: | SURFACE | PHASE: | 1 P / 3W | CODES: | 0=EQPT, 1=RCPT, 2=LTG, 3=A/C, 4=HEAT |
| ENCLOSURE: | NEMA 3R STYLE: NQOD | BUSSING: | 125 A | | 5=CONTINUOUS MOTORS, 6=LRGST MOTOR |
| BRKR MTG: | BOLT-ON (REF: SQUARE D) | MCB: | 100 A | ACCESSORIES: | GROUND BUS, 24 SPACE |
| BREAKERS: | SERIES RATED. 60/75 DEGREE TERMINALS | MLO: | A | | |

| CODE | BRKR | CIRCUIT USE | CKT | LOAD | A | B | LOAD | CKT | CIRCUIT USE | BRKR | CODE |
|---|---|---|---|---|---|---|---|---|---|---|---|
| 0 | 35/2GF | AIR COMPRESSOR | 1 | 2,040 | X | | 750 | 2 | ICE MACHINE | 20/1GF | 0 |
| 0 | | | 3 | 2,040 | | X | 400 | 4 | VENDING MACHINE | 20/1GF | 0 |
| 1 | 20/1 | INTERIOR LIGHTING | 5 | 200 | X | | 400 | 6 | VENDING MACHINE | 20/1GF | 0 |
| 1 | 20/1 | EXTERIOR LIGHTING | 7 | 40 | | X | 400 | 8 | VENDING MACHINE | 20/1GF | 0 |
| | 20/1 | SPARE | 9 | | X | | 180 | 10 | RCPT - AT ENTRY | 20/1GF | 1 |
| | 20/1 | SPARE | 11 | | | X | | 12 | SPARE | 20/1GF | |
| | 20/1 | SPARE | 13 | | X | | | 14 | SPARE | 20/1GF | |
| | 20/1 | SPARE | 15 | | | X | | 16 | SPARE | 20/1GF | |
| | 20/1 | SPARE | 17 | | X | | | 18 | SPARE | 20/1GF | |
| | 20/1 | SPARE | 19 | | | X | | 20 | SPARE | 20/1GF | |
| | | BUSSED SPACE | 21 | | X | | | 22 | BUSSED SPACE | | |
| | | BUSSED SPACE | 23 | | | X | | 24 | BUSSED SPACE | | |

| | EQPT VA | RCPT VA | LTG VA | AC/HEAT VA | MOTORS | CONN VA | FTL VA | PANEL VA | PHASE AMP |
|---|---|---|---|---|---|---|---|---|---|
| PHASE A | 3190 | 380 | 0 | 0 | 0 | 3570 | | 3570 | 30 |
| PHASE B | 2840 | 40 | 0 | 0 | 0 | 2880 | | 2880 | 24 |
| TOTAL | 6030 | 420 | 0 | 0 | 0 | 6450 | | 6450 | |

| | | | |
|---|---|---|---|
| PANEL DESIGN KVA: | 6.45 | PANEL SUBTOTAL: | 27 AMPS |
| RESERVE CAPACITY KVA: | 1.29 | RESERVE CAPACITY: | 5 AMPS |
| TOTAL KVA: | 7.74 | PANEL DESIGN CURRENT: | 32 AMPS |

## PANEL "PH"

| | | | | | |
|---|---|---|---|---|---|
| LOCATION: | PUMP STATION BUILDING | VOLTAGE: | 120/240 V | KAIC: 10 | BUSSING SHALL BE FULLY RATED |
| MOUNTING: | SURFACE | PHASE: | 1 P / 3W | CODES: | 0=EQPT, 1=RCPT, 2=LTG, 3=A/C, 4=HEAT |
| ENCLOSURE: | NEMA 3R STYLE: NQOD | BUSSING: | 225 A | | 5=CONTINUOUS MOTORS, 6=LRGST MOTOR |
| BRKR MTG: | BOLT-ON (REF: SQUARE D) | MCB: | 150 A | ACCESSORIES: | GROUND BUS, 24 SPACE |
| BREAKERS: | SERIES RATED. 60/75 DEGREE TERMINALS | MLO: | A | | |

| CODE | BRKR | CIRCUIT USE | CKT | LOAD | A | B | LOAD | CKT | CIRCUIT USE | BRKR | CODE |
|---|---|---|---|---|---|---|---|---|---|---|---|
| 0 | 20/1 | EXHAUST FAN - EF-3 | 1 | 480 | X | | 540 | 2 | RECEPTACLES | 20/2 | 0 |
| 1 | 20/1 | EXTERIOR LIGHTING | 3 | 150 | | X | 100 | 4 | INTERIOR LIGHTING | | 0 |
| 4 | 20/2 | UH-1 | 5 | 1,000 | X | | | 6 | SPARE | 20/1 | |
| 4 | | | 7 | 1,000 | | X | | 8 | SPARE | 20/1 | |
| | 20/1 | SPARE | 9 | | X | | | 10 | SPARE | 20/1 | |
| | 20/1 | SPARE | 11 | | | X | | 12 | SPARE | 20/1 | |
| | 20/1 | SPARE | 13 | | X | | | 14 | SPARE | 20/1 | |
| | 20/1 | SPARE | 15 | | | X | | 16 | SPARE | 20/1 | |
| | 20/1 | SPARE | 17 | | X | | | 18 | SPARE | 20/1 | |
| | 20/1 | SPARE | 19 | | | X | | 20 | SPARE | 20/1 | |
| 0 | 60/2 | BOOSTER PUMP CONTROL PANEL | 21 | 6,000 | X | | | 22 | BUSSED SPACE | | |
| 0 | | | 23 | 6,000 | | X | | 24 | BUSSED SPACE | | |

| | EQPT VA | RCPT VA | LTG VA | AC/HEAT VA | MOTORS | CONN VA | FTL VA | PANEL VA | PHASE AMP |
|---|---|---|---|---|---|---|---|---|---|
| PHASE A | 7020 | 0 | 0 | 1000 | 0 | 8020 | | 8020 | 67 |
| PHASE B | 6100 | 150 | 0 | 1000 | 0 | 7250 | | 7250 | 60 |
| TOTAL | 13120 | 150 | 0 | 2000 | 0 | 15270 | | 15270 | |

| | | | |
|---|---|---|---|
| PANEL DESIGN KVA: | 15.27 | PANEL SUBTOTAL: | 64 AMPS |
| RESERVE CAPACITY KVA: | 3.05 | RESERVE CAPACITY: | 13 AMPS |
| TOTAL KVA: | 18.32 | PANEL DESIGN CURRENT: | 76 AMPS |

TEXAS PARKS & WILDLIFE

SOUTH LLANO RIVER STATE PARK
HEADQUARTERS BUILDING RENOVATION AND EXPANSION
PROJECT NUMBER: 134245

STATE OF TEXAS
T. L. DAWSEY
66035
LICENSED PROFESSIONAL ENGINEER
04/09/2021

CLEARY ZIMMERMANN ENGINEERS
Firm No. F-9357 | ClearyZimmermann.com

FORD POWELL & CARSON Architects & Planners, Inc.
Architecture
Planning
Preservation
Interior Design
1138 East Commerce Street
San Antonio, Texas 78205
210/226-1246
92706

DATE: 04.09.2021
DESIGNED BY: TD
DRAWN BY: DD
REVIEWED BY: TD
REVISED:
REVISED:
REVISED:

CONSTRUCTION DOCUMENTS

SHEET TITLE
ELECTRICAL SCHEDULES

SHEET NUMBER
E501

PATH: V:\17045\Elec\17045 – E501.dwg

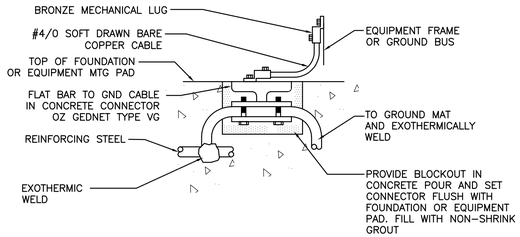


4 E601 EQUIPMENT CONNECTION TO GROUND MAT DETAIL
NTS

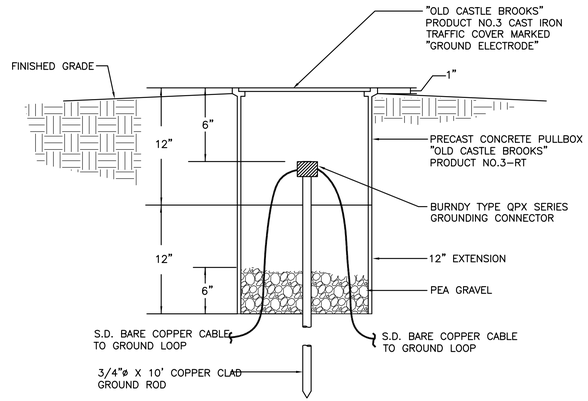


3 E601 GROUNDING SYSTEM TEST WELL
NTS

## ELECTRIC UNIT HEATER SCHEDULE

| MARK | CFM | ELECT. (V/PH/KW) | OUTPUT (BTU) | ELEMENTS (NO.) | TEMP. RISE | REFERENCE | NOTES |
|---|---|---|---|---|---|---|---|
| UH-1 | 400 | 240 / 1 / 2 | 6,828 | 1 @ 2KW | 40 DEG. | CHROMALOX HD3D | 1,2 |

NOTES (ELECTRIC UNIT HEATER SCHEDULE):
1. PROVIDE MANUFACTURER'S INTEGRAL THERMOSTAT OPTION SET AT 65 DEGREES.
2. PROVIDE MANUFACTURER'S STANDARD MOUNTING HARDWARE.

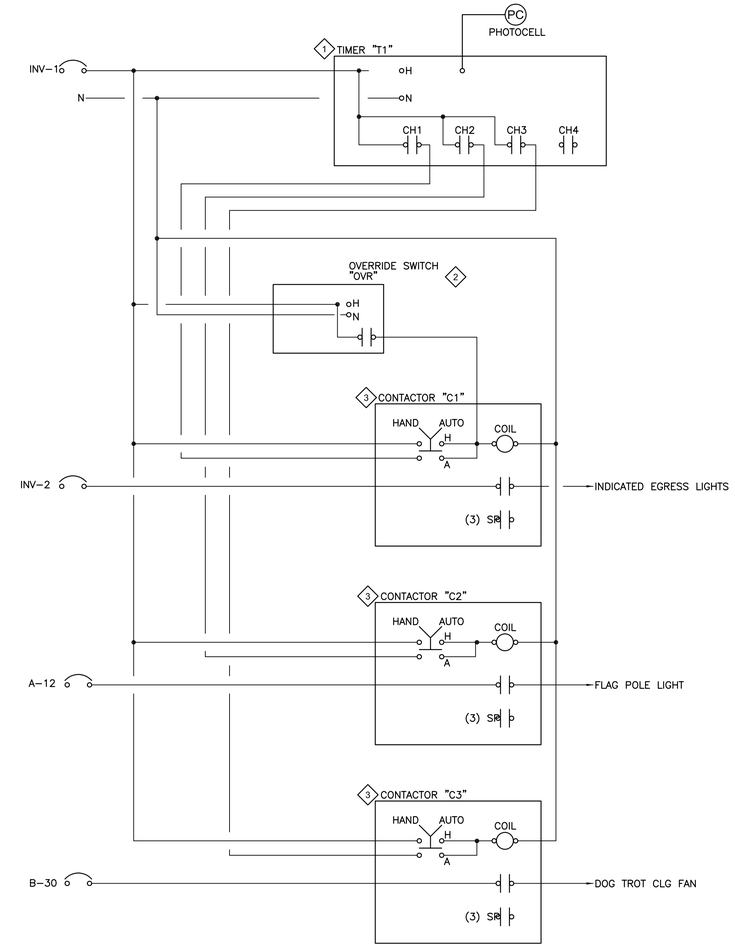


1 E601 LIGHTING CONTROL WIRING DIAGRAM
NTS

KEYED NOTES:

1. TIMER "T1" SHALL BE DIGITAL, 4-CHANNEL, ASTRONOMIC WITH MANUAL OVERRIDE AND SEVEN DAY POWER BACKUP (TORK #DLC400BP (INDOOR/OUTDOOR ENCLOSURE AND INCLUDES A MODEL EPC2 PHOTOSENSOR) OR EQUIVALENT BY OTHER MANUFACTURER. CONTRACTOR SHALL COORDINATE WITH OWNER FOR CUSTOM PROGRAMMING INCLUDING BUT NOT LIMITED TO WORKWEEK, WEEKEND, AND HOLIDAY SCHEDULING. MOUNT "T1" ABOVE PANEL "LP".
2. OVERRIDE SWITCH "OVR" SHALL BE A DIGITAL PROGRAMMABLE TIME SWITCH, SET FOR 2-HOUR TIME DELAY WITH FLASH AND AUDIBLE WARNING. (TORK #SS423 OR EQUIVALENT BY OTHER MANUFACTURER).
3. CONTACTOR SHALL HAVE HAND-AUTO (MAINTAINED 2-POSITION) SELECTOR SWITCH, 120V COIL, NEMA 1 OR NEMA 3R (AS APPROPRIATE) WALL MOUNTED ENCLOSURE AND 20-AMP CONTACTS AS INDICATED. MOUNT CONTACTOR ABOVE PANEL WHOSE CIRCUITS ARE BEING CONTROLLED.

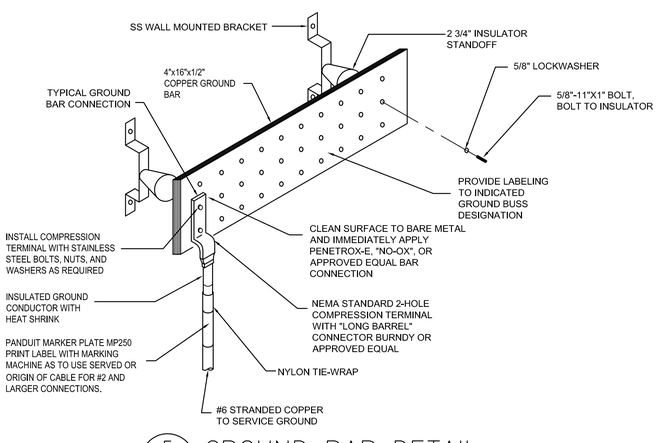


5 E601 GROUND BAR DETAIL
SCALE: NOT TO SCALE

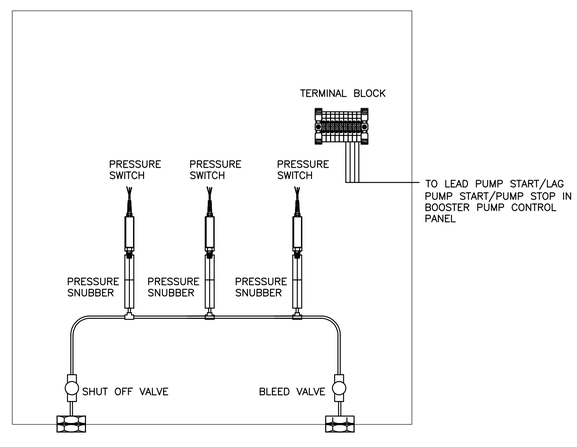


2 E601 PRESSURE SWITCH PANEL DETAIL
NTS

## LIGHTING FIXTURE SCHEDULE (PUMPING STATION)

| MARK | MANUFACTURER/MODEL | DIMENSION | LAMPS | MOUNTING | FIXTURE VA | VOLTAGE | LUMENS | TEMP | DESCRIPTION | KEYED NOTES |
|---|---|---|---|---|---|---|---|---|---|---|
| PSA | LITHONIA #FEM-L48-4000LM-IMACD-MD-MVOLT-GZ10-40K-80CRI & MHCH 36 | 17.2" W x 14.5" H x 48" L | LED | CHAIN | 23.8 | 120 | 4079 | 4000 | FIBERGLASS INDUSTRIAL, ACRYLIC LENS, NEMA 4X. | 1 |
| PSB | LITHONIA #WST-LED-P2-40K-VW-120-PE-DWHXD | 8.5" H x 17" W x 10.25" D | LED | WALL | 25 | 120 | 3512 | 4000 | WALL SCONCE, WHITE, IP65 RATED, PHOTOCELL. | 2 |
| PSC | HUBBELL VWGL-1 WITH VGL-RD GLOBE | 5.2" W x 11" H x X 7.34" D" | LED | WALL | 11 | 120 | 757 | 4100 | JELLY JAR, RED GLOBE, GUARD, IP66 RATED. | |
| | | | | | | | | | | |

GENERAL NOTES:
A. ALL FIXTURES SHALL BE SPEC GRADE UNLESS OTHERWISE NOTED.
B. ALL TOGGLE SWITCHES TO BE MOUNTED AT HEIGHTS TO COMPLY WITH ADA GUIDELINES UNLESS OTHERWISE NOTED.
C. LIGHTING FIXTURES SHALL BE COORDINATED WITH THE CEILING / WALL TYPE PRIOR TO ORDERING. ALL FIXTURES SHALL BE SUPPLIED WITH APPROVED MOUNTING DEVICES, HANGERS, MOUNTING FRAMES, AND TRIM FOR PROPER INSTALLATION IN THE CEILING OR SOFFIT SYSTEM BEING PROVIDED ON THIS PROJECT REGARDLESS OF THE CATALOG NUMBER. REFER TO ARCHITECTURAL REFLECTIVE CEILING PLAN / ELEVATIONS FOR ADDITIONAL MOUNTING INFORMATION.
D. ALL FIXTURES THAT HAVE A "E" SUFFIX ARE BATTERY BACK-UP. (EXAMPLE 'C1E'). ALL EMERGENCY BATTERY PACKS TO BE 1100 LUMEN FULL OUTPUT.

KEYED NOTES:
1. FIELD-COORDINATE MOUNTING HEIGHT WITH OWNER.
2. DARK SKY COMPATIBLE.

STATE OF TEXAS
T. L. DAWSEY
66035
PROFESSIONAL ENGINEER
04/09/2021

CLEARY ZIMMERMANN ENGINEERS
Firm No. F-9357 | ClearyZimmermann.com

FORD POWELL &CARSON
Architects & Planners, Inc.
Architecture
Planning
Preservation
Interior Design
1138 East Commerce Street
San Antonio, Texas 78205
210/226-1246
92706

TEXAS PARKS & WILDLIFE

SOUTH LLANO RIVER STATE PARK
HEADQUARTERS BUILDING RENOVATION AND EXPANSION
PROJECT NUMBER: 134245

DATE: 04.09.2021
DESIGNED BY: TD
DRAWN BY: DD
REVIEWED BY: TD
REVISED:
REVISED:
REVISED:

CONSTRUCTION DOCUMENTS

SHEET TITLE
ELECTRICAL DETAILS NO. 1

SHEET NUMBER
E601

PATH: V:\17045\Elec\17045 - E601.dwg

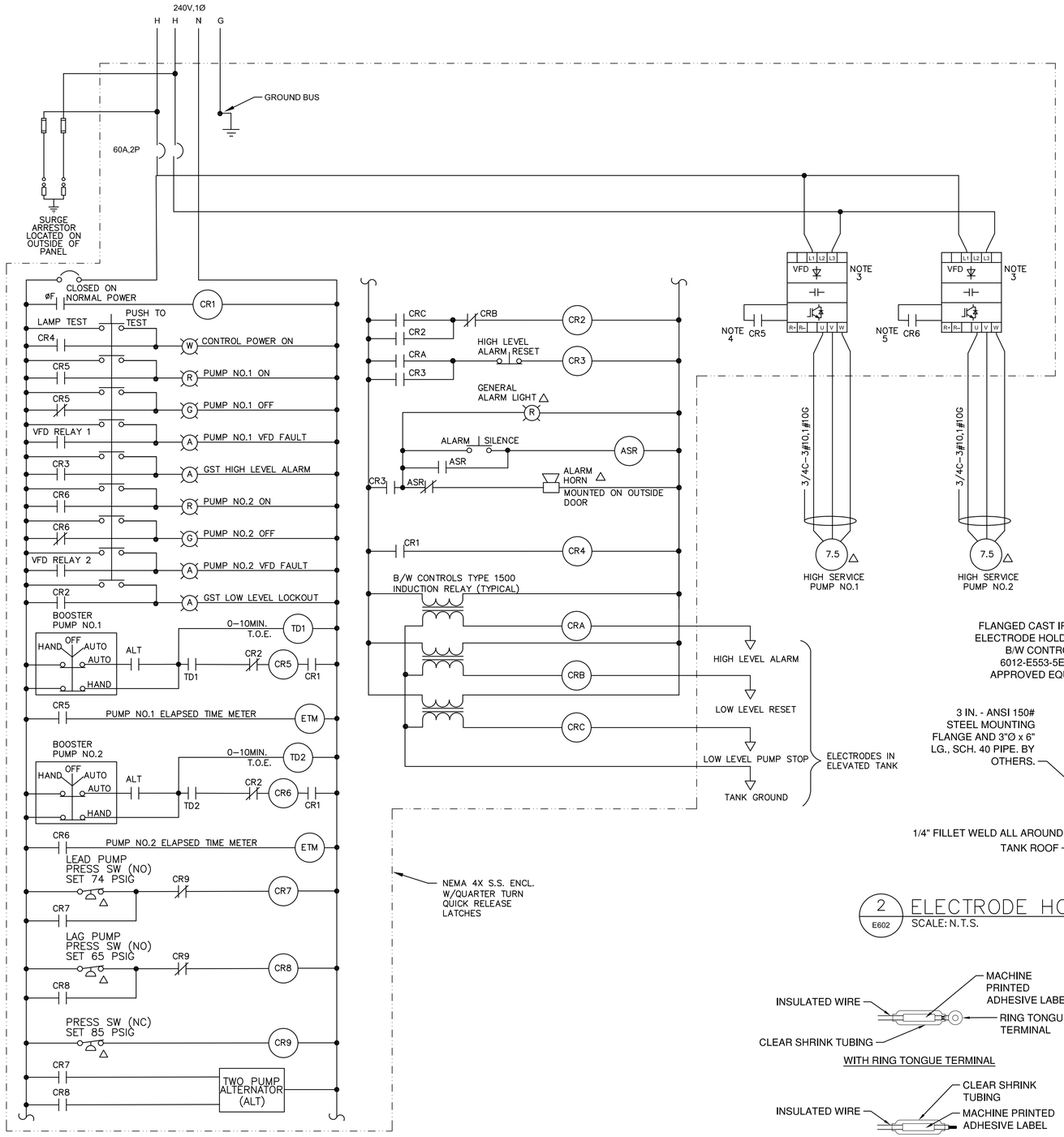


△ – DENOTES DEVICE LOCATED REMOTELY FROM PANEL

## 1 / E602 BOOSTER PUMP CONTROL PANEL SCHEMATIC

SCALE: N.T.S.

NOTES:
1. CONTRACTOR TO INSTALL ALL SAFETY AND ACCESSORIES REQUIRED BY PUMP VENDOR
2. COORDINATE PROBE LENGTHS/LEVELS WITH OWNER AND ENGINEER.
3. VFD SHALL BE PROGRAMMED FOR PRE–PROGRAMMED ACCELERATION TO FULL–SPEED OPERATION.
4. CR5 TO REMOTE START CONTACTS ON VFD
5. CR6 TO REMOTE START CONTACTS ON VFD

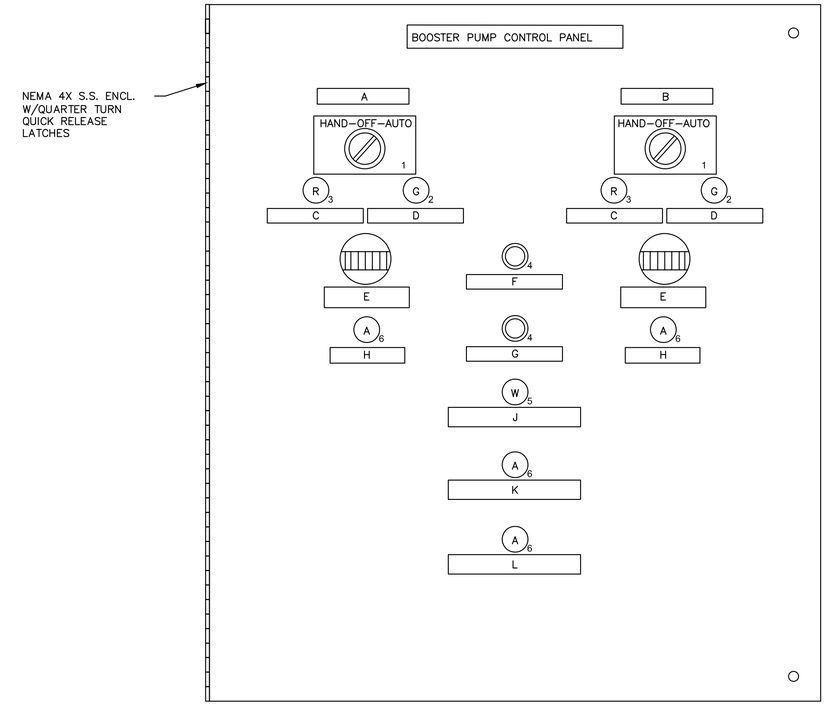


## 3 / E602 BOOSTER PUMP CONTROL PANEL (INNER DOOR)

SCALE: N.T.S.

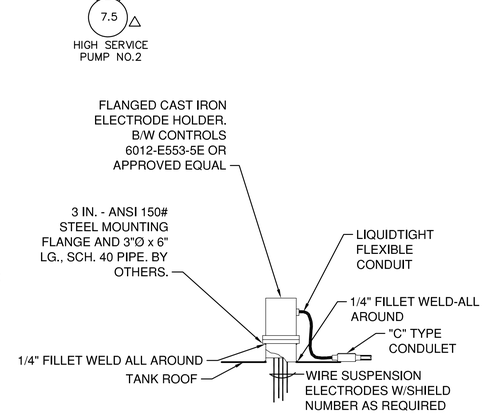


## 2 / E602 ELECTRODE HOLDER INSTALLATION DETAIL

SCALE: N.T.S.

### NAMEPLATE SCHEDULE

| MARK | INSCRIPTION | LETTER SIZE |
|---|---|---|
| A | BOOSTER PUMP 1 | 1/4" |
| B | BOOSTER PUMP 2 | 1/4" |
| C | PUMP ON | 1/4" |
| D | PUMP OFF | 1/4" |
| E | ELAPSED TIME | 1/4" |
| F | ALARM RESET | 1/4" |
| G | ALARM SILENCE | 1/4" |
| H | VFD FAULT | 1/4" |
| J | POWER FAILURE | 1/4" |
| K | LOW LEVEL LOCKOUT | 1/4" |
| L | ELEVATED STORAGE TANK HIGH LEVEL ALARM | 1/4" |

### LIST OF MATERIALS

| MARK | VENDOR | DESCRIPTION |
|---|---|---|
| 1 | FURNAS ELECTRIC | 3-POS. SELECTOR SWITCH |
| 2 | FURNAS ELECTRIC | OILTIGHT INDICATOR LIGHT, GREEN |
| 3 | FURNAS ELECTRIC | OILTIGHT INDICATOR LIGHT, RED |
| 4 | FURNAS ELECTRIC | MOMENTARY CONTACT PUSH BUTTON |
| 5 | FURNAS ELECTRIC | OILTIGHT INDICATOR LIGHT, WHITE |
| 6 | FURNAS ELECTRIC | OILTIGHT INDICATOR LIGHT, AMBER |

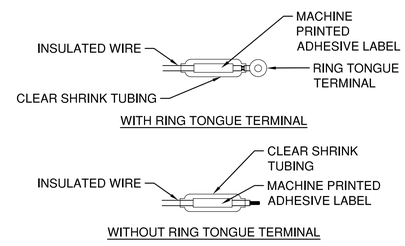


NOTE:

1. WHERE POSSIBLE, RING TERMINALS SHALL BE USED. ONE OF THE ABOVE METHODS MUST BE USED ON ALL WIRE #8 AWG & SMALLER. THE SAME SHALL BE USED ON LARGER WIRES UNLESS ALTERNATE METHOD IS SUBMITTED & APPROVED.

## 4 / E602 WIRE MARKING DETAIL

SCALE: N.T.S.

STATE OF TEXAS
T. L. DAWSEY
66035
PROFESSIONAL ENGINEER
04/09/2021

CLEARY ZIMMERMANN ENGINEERS
Firm No. F-9357 | ClearyZimmermann.com

FORD POWELL &CARSON Architects & Planners, Inc.
Architecture Planning Preservation Interior Design
1138 East Commerce Street
San Antonio, Texas 78205
210/226-1246
92706

TEXAS PARKS & WILDLIFE

SOUTH LLANO RIVER STATE PARK
HEADQUARTERS BUILDING RENOVATION AND EXPANSION
PROJECT NUMBER: 134245

DATE: 04.09.2021
DESIGNED BY: TD
DRAWN BY: DD
REVIEWED BY: TD
REVISED:
REVISED:
REVISED:

CONSTRUCTION DOCUMENTS

SHEET TITLE
ELECTRICAL DETAILS NO. 2

SHEET NUMBER
E602

PATH: V:\17045\Elec\17045 – E602.dwg

# PLUMBING SYMBOLS AND ABBREVIATIONS

NOTE: SELDOM ARE ALL SYMBOLS AND ABBREVIATIONS USED IN THE DRAWINGS; REFERENCE ONLY THOSE THAT ARE APPLICABLE.

| SYMBOL | DESCRIPTION |
|---|---|
| B.F.P. | BACKFLOW PREVENTER |
| | GAS COCK OR PLUG VALVE |
| | PRESSURE RELIEF VALVE |
| T&P | TEMPERATURE AND PRESSURE RELIEF VALVE |
| F.S. | FLOW SWITCH |
| FD-# | FLOOR DRAIN, (TYPE) |
| FS-# | FLOOR SINK, (TYPE) |
| AV | AUTOMATIC AIR VENT PIPED TO DRAIN |
| | GAUGE COCK |
| | FLOW METER |
| P.S. | PRESSURE SWITCH |
| | GATE VALVE |
| T.S. | TAMPER SWITCH |
| | O.S.&Y VALVE |
| | BUTTERFLY VALVE |
| | SOLENOID VALVE |
| | HOSE VALVE (UTILITY PURPOSES) |
| PIV | POST INDICATOR VALVE |
| | SWING CHECK VALVE |
| | NON-SLAM CHECK VALVE |
| | BALL VALVE |
| M.S. | BALL VALVE (MEMORY STOP) |
| | PIPE RISE (R) OR DROP (D) |
| | FLOW - IN DIRECTION OF ARROW |
| | RISER DOWN (ELBOW) |
| | RISER UP (ELBOW) |
| | TEE (OFF BOTTOM) |
| | RISE OR DROP |
| | BRANCH CONNECTION OUT OF TOP |
| | BRANCH CONNECTION OUT OF BOTTOM |
| | BRANCH CONNECTION OUT OF SIDE |
| | CAP ON END OF PIPE |
| | PLUGGED TEE |
| | CONCENTRIC REDUCER |
| | ECCENTRIC REDUCER |
| | UNION (SCREWED) |
| | UNION (FLANGED) |
| C.O. | CLEANOUT PLUG |
| F.C.O | FLOOR CLEAN OUT |

| SYMBOL | DESCRIPTION |
|---|---|
| Y.C.O. | YARD CLEAN OUT OR CLEAN OUT TO GRADE |
| | VALVE IN RISER (TYPE AS SPEC'D OR NOTED) |
| P.A. | PIPE ANCHOR |
| | PIPE GUIDE |
| | EXPANSION JOINT |
| W.C.O. | WALL CLEAN OUT |
| | CLEAN OUT W/ACCESS DOOR |
| | MECHANICAL GROOVED PIPE COUPLING |
| | FLEXIBLE PIPE CONNECTOR |
| | WATER HAMMER ARRESTOR W/ ACCESS DOOR |
| | THERMOMETER (STRAIGHT SCALE) |
| | THERMOMETER WITH SEPARABLE SOCKET WELL |
| T(P) | DIAL THERMOMETER (PRESSURRE GAGE) |
| | PLUMBING FIXTURES |
| HB | HOSE BIBB |
| WH | WALL HYDRANT |
| | THERMOMETER OR CONTROL TEST BULB WELL |
| | AQUASTAT |
| | PUMP |
| 3 | NOTES (NEW CONSTRUCTION) |
| HW-# | EQUIPMENT IDENTIFICATION |
| P-4A | PLUMBING FIXTURE AND EQUIPMENT MARK |
| CW 1 / RD 2 | PLUMBING RISER |
| | CONNECT TO EXISTING (PROVIDE AND INSTALL ALL NECESSARY TRANSITION FITTINGS) |
| X / X | DETAIL REFERENCE NUMBER ON SHEET / SHEET NUMBER |
| RD-1 (4") | PRIMARY ROOF DRAIN (OUTLET SIZE) |
| EOD-1 (6") | SECONDARY (EMERGENCY OVERFLOW DRAIN) ROOF DRAIN (OUTLET SIZE) |

| SYMBOL | DESCRIPTION |
|---|---|
| | COLD WATER PIPING |
| | HOT WATER (POTABLE) PIPING |
| | HOT WATER RETURN (POTABLE) PIPING |
| 120° | 120° HOT WATER (POTABLE) PIPING |
| 140° | 140° HOT WATER (POTABLE) PIPING |
| 160° | 160° HOT WATER (POTABLE) PIPING |
| 190° | 190° HOT WATER (POTABLE) PIPING |
| 120R | 120° HOT WATER RETURN PIPING |
| 140R | 140° HOT WATER RETURN PIPING |
| 160R | 160° HOT WATER RETURN PIPING |
| 190R | 190° HOT WATER RETURN PIPING |
| TW | TEMPERED WATER PIPING |
| | SANITARY SEWER PIPING (WASTE) |
| D | DRAIN PIPING |
| V | SANITARY VENT PIPING (WASTE) |
| G | NATURAL GAS PIPING |
| G MP | NATURAL GAS PIPING (MED PRESS) |
| RD | INTERIOR STORM DRAIN PIPING |
| SD | SITE STORM DRAIN PIPING |
| FM | FORCED MAIN |
| CA | COMPRESSED AIR PIPING |
| MA | MEDICAL AIR PIPING |
| MV | MEDICAL VACUUM PIPING |
| 02 | MEDICAL OXYGEN PIPING |
| NO | MED NITROUS OXIDE PIPING |
| N | MED NITROGEN PIPING |
| WAGD | WASTE ANESTHETIC GAS DISPOSAL PIPING |
| AW | WASTE PIPING (ACID RESISTANT) — "CHEMICAL-WASTE PIPING" |
| AV | VENT PIPING (ACID RESISTANT) — "CHEMICAL-WASTE PIPING" |
| F | FIRE PROTECTION PIPING |
| AS | AUTOMATIC SPRINKLER |
| SW | SOFT WATER PIPING |
| DI | DEIONIZED WATER PIPING |
| GW | GREASE WASTE PIPING |
| GV | GREASE VENT PIPING |
| HT | HEAT TRACED (115° F) HOT WATER PIPING |
| HT | HEAT TRACED (115° F) HOT WATER PIPING (WITH POWER CONNECTION POINT) |
| TP | TRAP-PRIMER PIPING (1/2" COPPER) |
| PD | PERIMETER DRAIN PIPING |
| RD | ROOF DRAIN PIPING (PRIMARY SYSTEM) |
| EOD | ROOF DRAIN PIPING (SECONDARY "EMERGENCY OVERFLOW DRAIN" SYSTEM) |

| SYMBOL | DESCRIPTION |
|---|---|
| ABV | ABOVE |
| AC | ABOVE CEILING |
| AD | ACCESS DOOR |
| ADA | AMERICANS WITH DISABILITIES ACT |
| ADJUST | ADJUSTABLE |
| AFF | ABOVE FINISHED FLOOR |
| AFG | ABOVE FINISHED GRADE |
| AP | ACCESS PANEL |
| ASSY | ASSEMBLY |
| AV | AIR VENT |
| AVTR | ACID VENT THRU ROOF |
| BF | BELOW FLOOR |
| CI | CAST IRON |
| CLG | CEILING |
| CO | CLEANOUT |
| CONC | CONCRETE |
| CONNX | CONNECTION |
| CONT | CONTINUATION |
| C.W.B.F. | COLD WATER PIPING BELOW FLOOR |
| C.W.O.H. | COLD WATER PIPING OVERHEAD |
| DEMO | DEMOLISH |
| DIAG | DIAGRAM |
| D.I. | DUCTILE IRON |
| DN | DOWN |
| DWG, DRWG | DRAWING |
| ELECT | ELECTRICAL |
| ELEV | ELEVATION |
| EOD | EMERGENCY OVERFLOW DRAIN |
| EXIST | EXISTING |
| EXT | EXTENTION |
| FCO | FLOOR CLEANOUT |
| FD | FLOOR DRAIN |
| F.F. | FINISHED FLOOR |
| FIN | FINISHED |
| FLR | FLOOR |
| FS | FLOOR SINK |
| FT | FEET |
| GAL(S) | GALLON(S) |
| GALV | GALVANIZED |
| GPM | GALLONS PER MINUTE |
| GTRV | GREASE VENT THRU ROOF |
| HB | HOSE BIBB |
| HC | HANDICAPPED |
| HD | HUB DRAIN |
| HTR | HEATER |
| H.W.B.F. | HOT WATER PIPING BELOW FLOOR |
| H.W.O.H. | HOT WATER PIPING OVERHEAD |

| SYMBOL | DESCRIPTION |
|---|---|
| INV | INVERT |
| IN | INCHES |
| MAX | MAXIMUM |
| MECH | MECHANICAL |
| MIN | MINIMUM |
| MTD | MOUNTED |
| NC | NORMALLY CLOSED |
| NIC | NOT IN CONTRACT |
| NO | NORMALLY OPEN |
| NTS | NOT TO SCALE |
| OFD | OVERFLOW ROOF DRAIN |
| OH | OVERHEAD |
| PD | PRESSURE DROP |
| PLBG | PLUMBING |
| PRESS | PRESSURE |
| PSI | POUNDS PER SQUARE INCH, GAUGE |
| PVC | POLYVINYL CHLORIDE |
| REC | RECEIVED |
| REQ | REQUIRED |
| RD | ROOF DRAIN |
| SA | SHOCK ARRESTOR |
| SHT | SHEET |
| SPEC(S) | SPECIFICATION(S) |
| SS | STAINLESS STEEL |
| STAT | STATIC |
| TEMP | TEMPERATURE |
| TMV | THERMOSTATIC MIXING VALVE |
| TP | TRAP PRIMER OR T.P. SUPPLY |
| TYP | TYPICAL |
| UG | UNDERGROUND |
| V | VENT |
| VCP | VITRIFIED CLAY PIPE |
| VTR | VENT THROUGH ROOF |
| WA | WATER HAMMER ARRESTOR |
| WH | WALL HYDRANT |
| W/ | WITH |
| W/O | WITHOUT |
| YCO | YARD CLEANOUT |

TYPICAL NOTE:

S — INDICATES EXISTING SLAB-ON-GRADE CONCRETE FLOOR TO BE REMOVED AND REPLACED: THE EXISTING SLAB-ON-GRADE SHALL BE REMOVED AND REPLACED AS FOLLOWS: SAW-CUT LIMITS OF EXCAVATION TO 1" DEPTH (DO NOT CUT STEEL REINFORCING); JACK-HAMMER CONCRETE TO BE REMOVED; BEND UP STEEL REINFORCING (RE-BAR); INSTALL NEW WORK; BEND STEEL REINFORCING BACK DOWN AND TIE A 6" LONG RE-BAR (#3) ACROSS THE BAR-CUT; REPOUR NEW CONCRETE FLOOR AND GRIND SMOOTH AFTER CURING.

PLUMBING GENERAL NOTES (APPLY TO ALL SHEETS):

1. ALL MATERIALS AND CONSTRUCTION PROCEDURES PERTAINING TO THE WORK DESCRIBED IN THESE DRAWINGS SHALL CONFORM TO THE REQUIREMENTS OF ALL AUTHORITIES HAVING JURISDICTION.

2. CONTRACTORS SHALL OBTAIN AND MAKE PROVISION FOR ALL PERMITS, INSPECTIONS, AND TESTS REQUIRED BY AUTHORITIES HAVING JURISDICTION.

3. CONTRACTORS SHALL BE SOLELY RESPONSIBLE FOR VERIFYING ACTUAL CONDITIONS AT THE SITE AND NOTING ALL DISCREPANCIES TO THE OWNER PRIOR TO WORK COMMENCEMENT; THEREAFTER, THE CONTRACTOR ACCEPTS FULL RESPONSIBILITY FOR ALL EXISTING CONDITIONS AND SHALL BE SOLELY RESPONSIBLE FOR MAKING ALL SUITABLE ADJUSTMENTS NECESSARY TO ACCOMMODATE NEW WORK AT NO ADDITIONAL COST TO THE OWNER; ANY SUCH ADJUSTMENTS SHALL BE COORDINATED WITH THE OWNER AND ARCHITECT.

4. CONTRACTORS SHALL INCORPORATE ALL DISCREPANCIES AND ADJUSTMENTS INTO THE CONSTRUCTION DOCUMENTS.

5. CONTRACTORS SHALL COORDINATE ALL WORK WITH OTHER TRADES AND INCLUDE ALL NECESSARY MODIFICATIONS TO ACCOMMODATE THEIR WORK.

6. CONTRACTORS SHALL COORDINATE ALL WORK WITH THE OWNER.

7. ALL MATERIALS AND WORKMANSHIP SHALL BE GUARANTEED FOR A MINIMUM OF ONE YEAR FROM THE DATE OF INSTALLATION.

8. CONTRACTORS SHALL BE SOLELY RESPONSIBLE FOR THE SAFETY OF THEIR EMPLOYEES AND SUBCONTRACTORS AND ALL OTHER PERSONS IN THE AREAS OF CONSTRUCTION. CONTRACTORS SHALL ALSO BE RESPONSIBLE FOR THE SAFETY OF ALL PROPERTY BEING ERECTED.

9. PLUMBING SERVICES THAT INTERFERE WITH ANY NEW ARCHITECTURAL WORK SHALL BE RELOCATED AS NECESSARY.

10. INSTALL VALVES WITH BRASS SHORT NIPPLES AND BRASS UNIONS AT DOWNSTREAM SIDE (OUTLET) OF BALL AND GLOBE VALVES (NPS 2 AND SMALLER).

NOTE: EXISTING PIPING, FITTINGS AND EQUIPMENT WILL BE INDICATED WITH A LIGHTER LINE WEIGHT THAN NEW WORK.

DEMOLITION PIPING, FITTINGS, AND EQUIPMENT WILL BE INDICATED WITH A "HIDDEN" BROKEN LINE TYPE.

STATE OF TEXAS
THOMAS E. WATSON
114610
LICENSED PROFESSIONAL ENGINEER

CLEARY ZIMMERMANN ENGINEERS
Firm No. F-9357 | ClearyZimmermann.com

FORD POWELL &CARSON
Architects & Planners, Inc.
Architecture
Planning
Preservation
Interior Design
1138 East Commerce Street
San Antonio, Texas 78205
210/226-1246
92706

TEXAS PARKS & WILDLIFE

SOUTH LLANO RIVER STATE PARK
HEADQUARTERS BUILDING RENOVATION AND EXPANSION
PROJECT NUMBER: 134245

DATE: 04.09.2021
DESIGNED BY: TEW
DRAWN BY: JAF
REVIEWED BY: TEW
REVISED:
REVISED:
REVISED:

SHEET TITLE
PLUMBING SYMBOLS & ABBREVIATIONS

SHEET NUMBER
P000

CONSTRUCTION DOCUMENTS

PATH: V:\17045\Plbg\17045 - P000.dwg

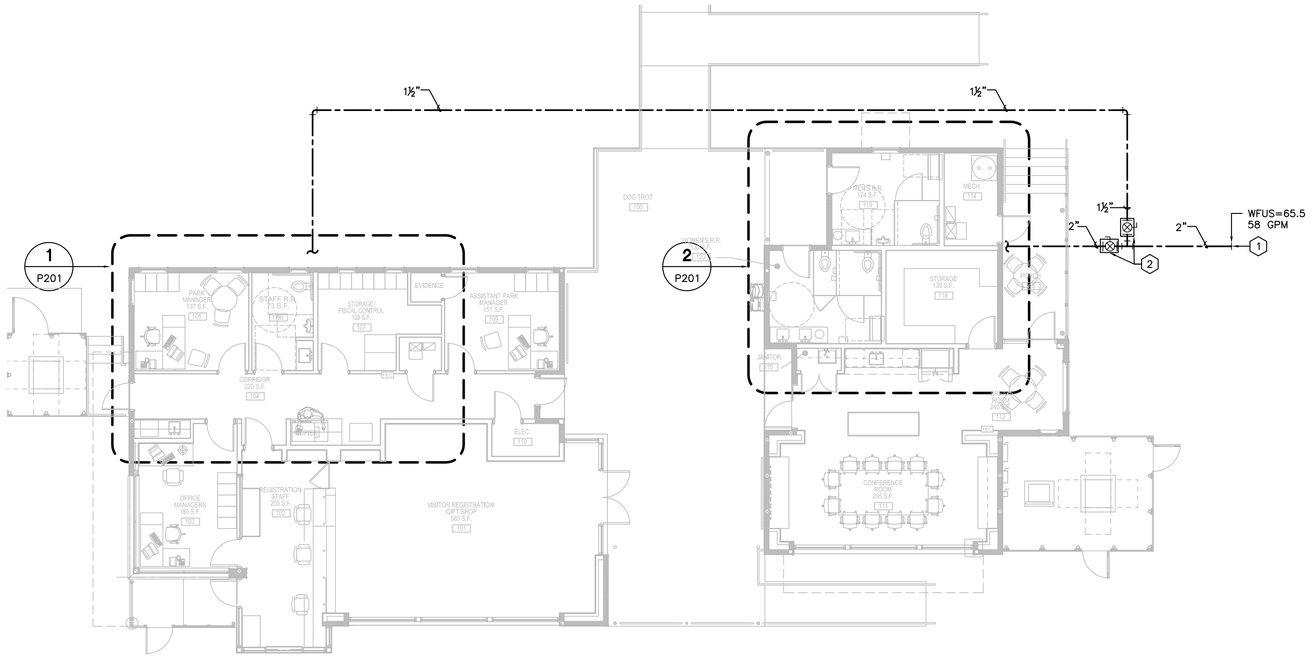


NORTH

1 P101 UNDERFLOOR PLUMBING PLAN
1/8" = 1'-0"

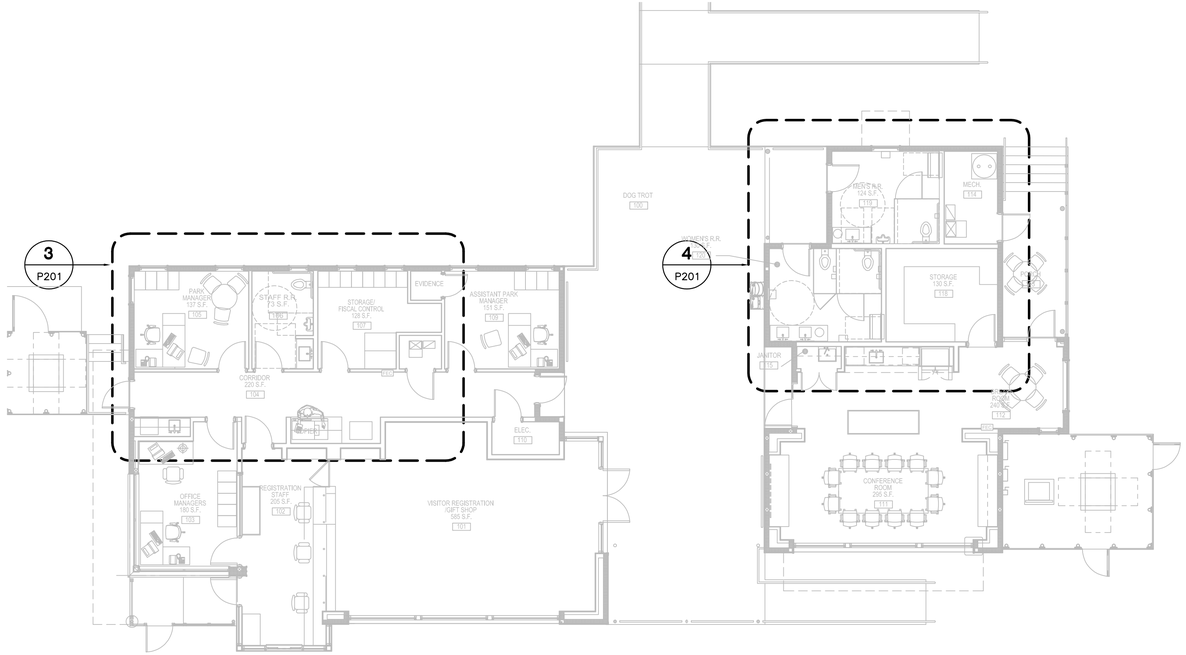


NORTH

2 P101 PLUMBING FLOOR PLAN
1/8" = 1'-0"

**PLUMBING KEYED NOTES:**

1. 2" DOMESTIC COLD WATER STUB-OUT. REFER TO CIVIL DRAWINGS FOR CONTINUATION. PROVIDE 3" TO 2" TRANSITION AT CONNECTION TO CIVIL.
2. PROVIDE ISOLATION VALVES IN CAST IRON VALVE BOX. PROVIDE STAMPED COPPER ID TAG WITHIN BOX FOR EACH VALVE INDICATING AREA SERVED.

TEXAS PARKS & WILDLIFE

SOUTH LLANO RIVER STATE PARK
HEADQUARTERS BUILDING RENOVATION AND EXPANSION
PROJECT NUMBER: 134245

DATE: 04.09.2021
DESIGNED BY: TEW
DRAWN BY: JAF
REVIEWED BY: TEW
REVISED:
REVISED:
REVISED:

CONSTRUCTION DOCUMENTS

CLEARY ZIMMERMANN ENGINEERS
Firm No. F-9357 | ClearyZimmermann.com

FORD POWELL & CARSON Architects & Planners, Inc.
Architecture
Planning
Preservation
Interior Design
1138 East Commerce Street
San Antonio, Texas 78205
210/226-1246
92706

SHEET TITLE
PLUMBING OVERALL PLANS

SHEET NUMBER
P101

PATH: V:\17045\Plbg\17045 – P101.dwg

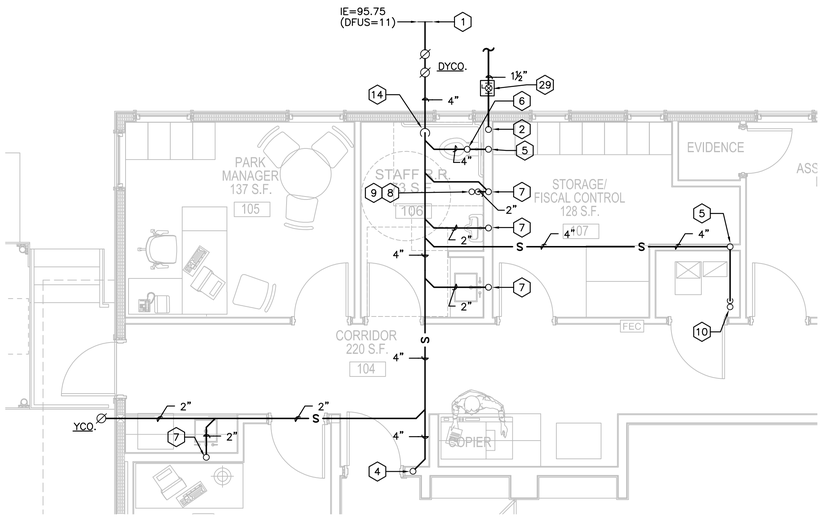


## 1 P201 ENLARGED UNDERFLOOR PLUMBING PLAN

SCALE: 1/4" = 1'-0"

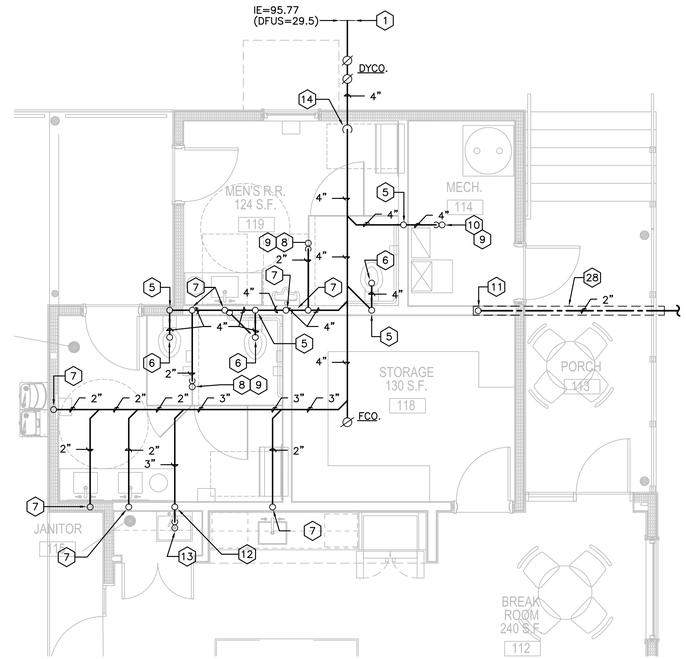


## 2 P201 ENLARGED UNDERFLOOR PLUMBING PLAN

SCALE: 1/4" = 1'-0"

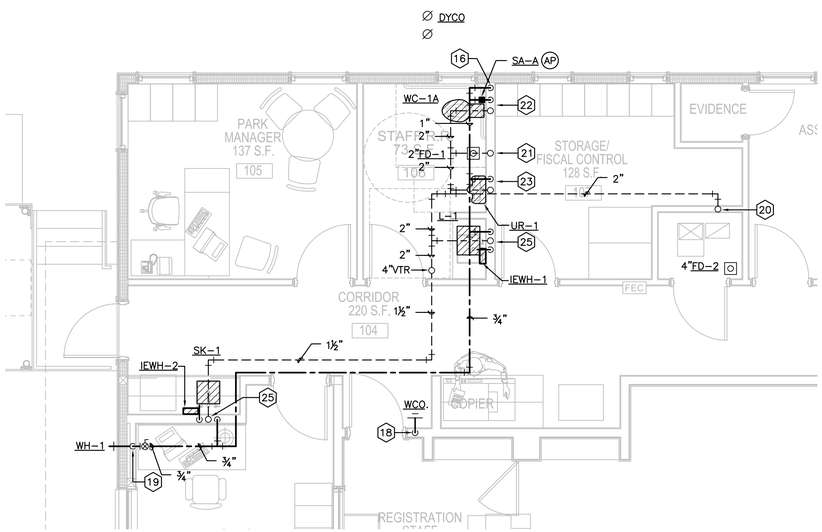


## 3 P201 ENLARGED PLUMBING FLOOR PLAN

SCALE: 1/4" = 1'-0"

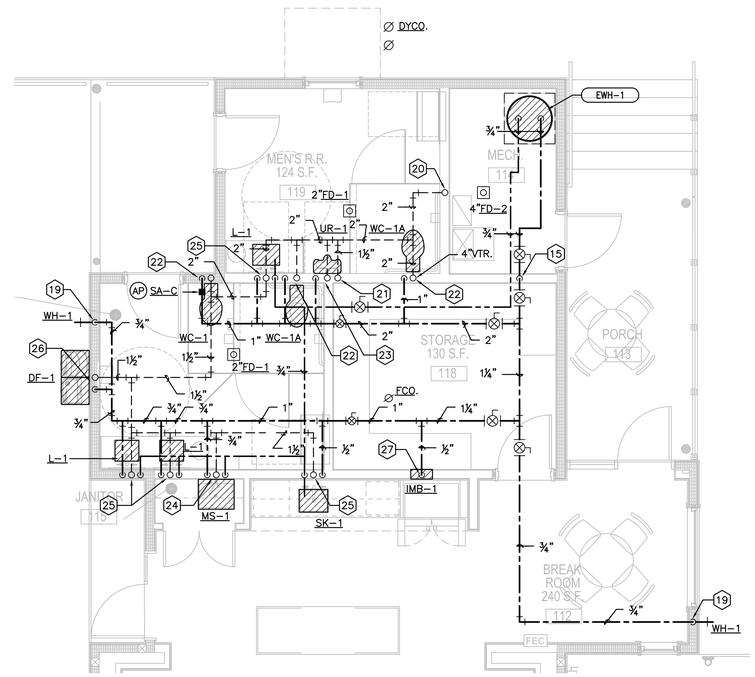


## 4 P201 ENLARGED FLOOR PLUMBING PLAN

SCALE: 1/4" = 1'-0"

### PLUMBING KEYED NOTES:

1. 4" SANITARY SEWER STUB-OUT. REFER TO CIVIL DRAWINGS FOR CONTINUATION.
2. 1 1/2" COLD WATER RISER.
3. NOT USED.
4. 4" WASTE PIPING UP TO WALL CLEANOUT ABOVE FLOOR.
5. 4" WASTE PIPING FROM FLOOR ABOVE.
6. 4" CLOSET BEND.
7. 2" WASTE PIPING FROM FLOOR ABOVE.
8. 2" WASTE PIPING FROM FLOOR DRAIN ABOVE.
9. PROVIDE TRAP GUARD EQUAL TO RECTOR SEAL SURESEAL WITH EPDM DIAPHRAGM.
10. 4" WASTE PIPING FROM FLOOR DRAIN ABOVE.
11. 2" COLD WATER RISER.
12. 3" WASTE PIPING FROM FLOOR ABOVE.
13. 3" WASTE PIPING FROM MOP SINK ABOVE.
14. 4" SANITARY PIPING DROP DOWN ADJACENT TO BUILDING COLUMN.
15. ROUTE 2" COLD WATER RISER UP FROM BELOW FLOOR.
16. ROUTE 1 1/2" COLD WATER RISER UP FROM BELOW FLOOR.
17. NOT USED.
18. 4" WASTE PIPING UP FROM BELOW FLOOR TO 4" WALL CLEAN-OUT.
19. ROUTE 3/4" COLD WATER PIPING DOWN IN WALL TO WALL HYDRANT MOUNTED 18" AFF.
20. ROUTE 2" VENT RISER UP FROM BELOW AND OFFSET OVERHEAD.
21. ROUTE 1 1/2" RISER UP FROM BELOW AND OFFSET OVERHEAD.
22. ROUTE 1" COLD WATER PIPING DOWN IN WALL, 4" WASTE PIPING TO BELOW FLOOR, OFFSET 2" VENT PIPING OVERHEAD TO ABOVE CEILING.
23. ROUTE 3/4" COLD WATER PIPING DOWN IN WALL, 2" WASTE PIPING TO BELOW FLOOR, OFFSET 1 1/2" VENT PIPING OVERHEAD TO ABOVE CEILING.
24. ROUTE 3/4" COLD WATER PIPING DOWN IN WALL, 3" WASTE PIPING TO BELOW FLOOR, OFFSET 1 1/2" VENT PIPING OVERHEAD TO ABOVE CEILING.
25. ROUTE 1/2" HOT AND COLD WATER PIPING DOWN IN WALL, 2" WASTE PIPING TO BELOW FLOOR, OFFSET 1 1/2" VENT PIPING OVERHEAD TO ABOVE CEILING.
26. ROUTE 1/2" COLD WATER PIPING DOWN IN WALL, 2" WASTE PIPING TO BELOW FLOOR, OFFSET 1 1/2" VENT PIPING OVERHEAD TO ABOVE CEILING.
27. ROUTE 1/2" COLD WATER PIPING DOWN IN WALL TO ICE MAKER SUPPLY BOX (IMB-1).
28. SLEEVE WATER LINE IN 4" SCHEDULE 40 PVC SLEEVE WITH LONG SWEEP ELBOWS. EXTEND SLEEVE 6" ABOVE FINISHED FLOOR WITHIN BUILDING AND SEAL SLEEVE END WATER TIGHT UNDERGROUND.
29. PROVIDE BUILDING ISOLATION VALVE IN CAST IRON VALVE BOX.

TEXAS PARKS & WILDLIFE

SOUTH LLANO RIVER STATE PARK
HEADQUARTERS BUILDING RENOVATION AND EXPANSION
PROJECT NUMBER: 134245

DATE: 04.09.2021
DESIGNED BY: TEW
DRAWN BY: JAF
REVIEWED BY: TEW
REVISED:
REVISED:
REVISED:

CONSTRUCTION DOCUMENTS

SHEET TITLE
ENNLARGED UNDERFLOOR PLUMBING PLAN

SHEET NUMBER
P201

STATE OF TEXAS
THOMAS DAWORTSON
REGISTERED
LICENSED
PROFESSIONAL ENGINEER

CLEARY ZIMMERMANN ENGINEERS
Firm No. F-9357 | ClearyZimmermann.com

FORD POWELL & CARSON
Architects & Planners, Inc.
Architecture
Planning
Preservation
Interior Design
1138 East Commerce Street
San Antonio, Texas 78205
210/226-1246
92706

PATH: V:\17045\Plbg\17045 - P201.dwg

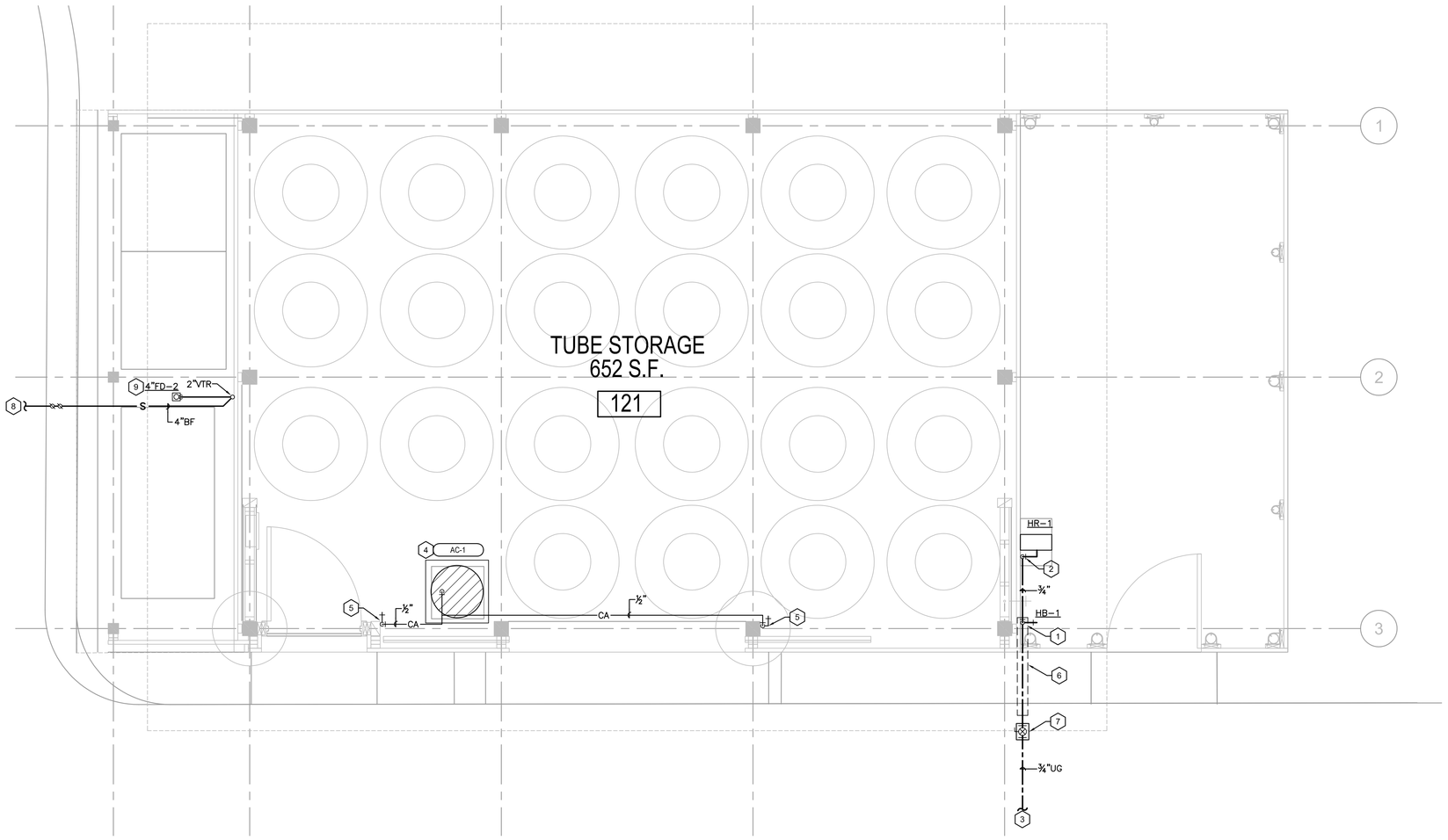


PLAN NORTH

1 P202 TUBE SHED PLUMBING PLAN
SCALE: 1/2" = 1'-0"

PLUMBING KEYED NOTES:

1. ¾" COLD WATER UP FROM BELOW GRADE. PROVIDE ISOLATION VALVE 6" ABOVE FINISHED FLOOR AND HOSE BIBB AT 30" ABOVE FINISHED FLOOR.
2. ROUTE ¾" COLD WATER DOWN WALL TO WALL MOUNTED HOSE REEL.
3. ¾" DOMESTIC COLD WATER. REFER TO CIVIL FOR CONTINUATION.
4. AIR COMPRESSOR INSTALLED ON 5.5" CONCRETE HOUSEKEEPING PAD.
5. ROUTE ½" COMPRESSED AIR DOWN TO 42" ABOVE FINISHED FLOOR AND PROVIDE WITH QUICK CONNECT AIR FITTING. PROVIDE ISOLATION VALVE AT 60" ABOVE FINISHED FLOOR.
6. SLEEVE WATER LINE IN 4" SCHEDULE 40 PVC SLEEVE WITH LONG SWEEP ELBOWS. EXTEND SLEEVE 6" ABOVE FINISHED FLOOR WITHIN BUILDING AND SEAL SLEEVE END WATER TIGHT UNDERGROUND.
7. PROVIDE BUILDING ISOLATION VALVE IN CAST IRON VALVE BOX.
8. 4" SANITARY SEWER (I.E.=36"BFF). REFER TO CIVIL FOR CONTINUATION.
9. PROVIDE FLOOR DRAIN WITH TRAP GUARD.

STATE OF TEXAS
THOMAS DAWGERSON
16640330
LICENSED
PROFESSIONAL ENGINEER

CLEARY ZIMMERMANN ENGINEERS
Firm No. F-9357 | ClearyZimmermann.com

FORD POWELL & CARSON
Architects & Planners, Inc.
Architecture
Planning
Preservation
Interior Design
1138 East Commerce Street
San Antonio, Texas 78205
210/226-1246
92706

TEXAS PARKS & WILDLIFE

SOUTH LLANO RIVER STATE PARK
HEADQUARTERS BUILDING RENOVATION AND EXPANSION
PROJECT NUMBER: 134245

DATE: 04.09.2021
DESIGNED BY: TD
DRAWN BY: DD
REVIEWED BY: TD
REVISED:
REVISED:
REVISED:

CONSTRUCTION DOCUMENTS

SHEET TITLE
TUBE SHED PLAN - PLUMBING

SHEET NUMBER
P202

PATH: V:\17045\Plbg\17045 - P202.dwg

# AIR COMPRESSOR SCHEDULE

| | | |
|---|---|---|
| MARK | AC–1 | |
| TYPE | 1–STAGE | |
| FREE AIR DELIVERY (CFM) | 11.3 | |
| SIZE (LxWxH) (IN) | 20x23x66 | |
| DISCHARGE PIPE SIZE (IN) | 1/2" | |
| MAX PRESSURE (PSI) | 135 | |
| TANK SIZE (GALLONS) | 60 | |
| ORIENTATION | VERTICAL | |
| **ELECTRIC** | | |
| MOTOR (HP) | 3 | |
| VOLTAGE/PHASE/HZ | 230/1/60 | |
| SPEED (RPM) | 3600 | |
| SERVICE FACTOR | 1.25 | |
| **GENERAL** | | |
| OPERATING WEIGHT (LBS) | 300 | |
| MFGR. AND MODEL | INGERSOLL RAND SS3L3 | |
| MIN. O.A. TEMP. TO CONDENSER | 35 | |
| NOTES | 1,2,3 | |

* AT SCHEDULED CONDITIONS

NOTES:

1. PROVIDE WITH SINGLE POINT POWER CONNECTION.
2. INSTALL ON 5.5" CONCRETE HOUSEKEEPING PAD.
3. CONTRACTOR RESPONSIBLE FOR RIGGING AND LOCATING UNIT.

# PLUMBING FIXTURE SCHEDULE

| MARK | DESCRIPTION | WASTE | VENT | TRAP | WATER (COLD) | WATER (HOT) | NOTES |
|---|---|---|---|---|---|---|---|
| WC–1 | WATER CLOSET (FLOOR MTD) | 4" (PVC) | 2" (PVC) | INTEGRAL (N/A) | 1" (PEX) | NONE | AMERICAN STANDARD #3451.001 WATER CLOSET WITH 5905.100 SEAT; SLOAN ROYAL #111–1.28 FLUSHOMETER. EVERCLEAN FINISH ON BOWL. |
| WC–1A | WATER CLOSET (FLOOR MTD, ADA) | 4" (PVC) | 2" (PVC) | INTEGRAL (N/A) | 1" (PEX) | NONE | AMERICAN STANDARD #3461.001 WATER CLOSET WITH 5905.100 SEAT; SLOAN ROYAL #111–1.28 FLUSHOMETER. EVERCLEAN FINISH ON BOWL. |
| UR–1 | URINAL (WALL–HUNG, ADA) | 2" (PVC) | 1–1/2" (PVC) | INTEGRAL (N/A) | 3/4" (PEX) | NONE | AMERICAN STANDARD 6501.010 URINAL SLOAN 186–0.5 MANUAL FLUSHOMETER, 0.5 GPF. |
| L–1 | LAVATORY (COUNTER MTD, ADA) | 2" (PVC) | 1–1/2" (PVC) | 1–1/4" (BRASS) | 1/2" (PEX) | 1/2" (PEX) | AMERICAN STANDARD 0614.300 RECTANGULAR UNDERMOUNT LAVATORY. MOEN CA8302 ELECTRONIC FAUCET, AC POWER (PLUG–IN), 0.5 GPM AERATOR. PROVIDE WITH UNDERSINK PIPING COVERS EQUAL TO IPS TRUEBRO LAV GUARD 2. |
| SK–1 | SINK (COUNTER MTD, ADA) | 2" | 1–1/2" | 1–1/4" (BRASS) | 1/2" (PEX) | 1/2" (PEX) | ELKAY LRAD–172055, SINGLE COMPARTMENT SS SINK, ADA 5.5" DEPTH, THREE HOLE, 8" CNTR. MOEN 8225SM FAUCET, SWING SPOUT, AERATOR, BLADE HANDLES, ELKAY LK–18B SS GRID STRAINER, McGUIRE H21265LK SUPPLIES, 17 GUAGE CP TAILPIECE AND WALL BEND, CP CAST BRASS P–TRAP WITH CLEANOUT, ADA INSULATION KIT |
| DF–1 | DRINKING FOUNTAIN (BI–LEVEL) | 2" (PVC) | 1–1/2" (PVC) | 1–1/4" (BRASS) | 1/2" (PEX) | NONE | ELKAY OUTDOOR EZH2O SYSTEM #LK4409BF, VANDAL RESISTANT, OUTDOOR RATED, WALL MOUNT WATER COOLER WITH BOTTLE FILLING STATION, MECHANICAL FRONT BUBBLER. COORDINATE FINAL COLOR SELECTION WITH ARCHITECT PRIOR TO PURCHASE. |
| MS–1 | MOP SINK | 3" (PVC) | 1–1/2" (PVC) | 3" (PVC) | 3/4" (PEX) | 3/4" (PEX) | STERN WILLIAMS MODEL HL–1810. 24" X 24" X 12" HIGH. 6" FRONT DROP WITH SS CAP, FLOOR MOUNTED, CORNER TERRAZZO, WITH 3" CAST BRASS DRAIN AND NICKLE–BRONZE STRAINER, CHICAGO FAUCET NO. 897 COMBINATION SERVICE SINK FITTING WITH VACUUM BREAKER, 3/4" HOSE THREAD ON SPOUT. NO. 369 HANDLES, WALL BRACE, FAIL HOOK, INTEGRAL STOPS, 36" HOSE. |
| IMB–1 | ICE MAKER BOX | – | – | – | 1/2" (PEX) | NONE | GUY GRAY #SSMIB6AB, LEAD FREE, HAMMER ARRESTOR, STAINLESS STEEL BOX |
| HR–1 | HOSE REEL | – | – | – | 3/4" (PEX) | NONE | T&S #B–7142–C05 ECLOSED STAINLESS STEEL HOSE REEL WITH G016737–45 MOUNTING BRACKET, MV–2522–24 FRONT TRIGGER WATER GUN, AND ORK–SK CONNECTOR KIT. |
| HB–1 | HOSE BIBB | – | – | – | 1/2" (PEX) | NONE | CHICAGO FAUCET MODEL 952–CP HOSE BIB WITH ATMOSPHERIC VACUUM BREAKER. |
| WH–1 | FREEZELESS WALL HYDRANT | – | – | – | 1/2" (PEX) | NONE | WADE MODEL 8604 NON–FREEZE HYDRANT WITH T–KEY OPERATION |

NOTE:

1. COORDINATE ADA PLUMBING FIXTURE LOCATIONS WITH ARCHITECTURAL PLANS.

# WATER HEATER SCHEDULE

| | | |
|---|---|---|
| MARK | EHW–1 | |
| SERVICE | DOMESTIC HOT WATER | |
| TYPE | TANK | |
| SIZE | 15 | |
| RECOVERY (AT 80° RISE) | 15 | |
| C.W. INLET DIAMETER | 3/4" | |
| H.W. OUTLET DIAMETER | 3/4" | |
| INPUT RATING (Btuh/kW) | 3KW | |
| ELEC. SERVICE (V / PH / A) | 240V/1PH | |
| INTERIOR FINISH | GLASS | |
| MODEL NO. | DEL–15 | |
| REFERENCED MANUFACTURER | AO SMITH | |
| NOTES | 1,2 | |

NOTES:

1. STANDBY LOSS SHALL COMPLY WITH INTERNATIONAL ENERGY CONSERVATION CODE.
2. PROVIDE WITH DOMESTICALLY RATED EXPANSION TANK AND VACUUM BREAKER.

# INSTANTANIOUS WATER HEATER SCHEDULE

| MARK | IEWH–1 | IEWH–2 |
|---|---|---|
| LOCATION | LAVATORY | SINK |
| TYPE | INSTANTANEOUS | INSTANTANEOUS |
| TEMP. RISE / GPM | 41 / 0.5 | 30 / 1.5 |
| C.W. INLET DIAMETER | 1/2" | 1/2" |
| H.W. OUTLET DIAMETER | 1/2" | 1/2" |
| INPUT RATING (kW) | 3 | 6.5 |
| ELEC. SERVICE (V / PH) | 120 / 1 | 240 / 1 |
| SIZE (GALLONS) | N/A | N/A |
| MODEL NO. | EX3012T | EX65T |
| REFERENCED MANUFACTURER | EEMAX | EEMAX |
| NOTES | 1 | 1 |

NOTES:

1. HEATER TO BE ASSE 1070 RATED.

# FLOOR DRAIN SCHEDULE

| MARK | DESCRIPTION | SERVICE | GRATE DIMENSION | OUTLET DIAMETER | MANUFACTURER & MODEL |
|---|---|---|---|---|---|
| FD–1 | CAST IRON BODY WITH ADJUSTABLE NICKEL BRONZE STRAINER, CLAMPING COLLAR, VANDALPROOF SCREWS AND DEEP SEAL P–TRAP. | RESTROOMS, GEN. SERVICE | 5"ø | * | WADE W–1100–G–5 |
| FD–2 | CAST IRON BODY WITH 12" ROUND C.I. GRATE, ADJUSTABLE TOP, SEDIMENT BUCKET WITH DEEP SEAL P–TRAP. | MECHANICAL ROOMS | 12"ø | 3"ø | WADE W–1240–TD |

GENERAL NOTES (FLOOR DRAIN SCHEDULE):

1. REFER TO SPECIFICATIONS FOR ADDITIONAL REQUIREMENTS.
2. ALL FLOOR DRAINS SHALL INCLUDE AN ANCHORING FLANGE AND PRIMER TAP.
3. INSULATE BODY, TAILPIECE AND P–TRAP OF ALL FLOOR DRAINS SERVING HVAC EQUIPMENT.

* REFER TO FLOOR PLAN FOR PIPE SIZE.

STATE OF TEXAS
THOMAS E. WATSON
114610
LICENSED
PROFESSIONAL ENGINEER

CLEARY ZIMMERMANN ENGINEERS

Firm No. F-9357 | ClearyZimmermann.com

FORD POWELL &CARSON
Architects & Planners, Inc.

Architecture
Planning
Preservation
Interior Design

1138 East Commerce Street
San Antonio, Texas 78205
210/226-1246
92706

TEXAS PARKS & WILDLIFE

SOUTH LLANO RIVER STATE PARK
HEADQUARTERS BUILDING RENOVATION AND EXPANSION
PROJECT NUMBER: 134245

DATE: 04.09.2021
DESIGNED BY: TEW
DRAWN BY: JAF
REVIEWED BY: TEW
REVISED:
REVISED:
REVISED:

CONSTRUCTION DOCUMENTS

SHEET TITLE
PLUMBING SCHEDULES

SHEET NUMBER
P300

PATH: W:\17045\Pbg\17045 – P300.dwg

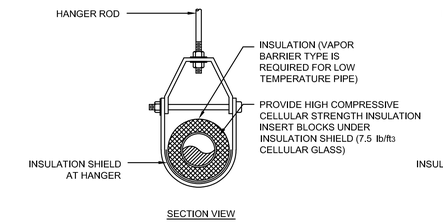


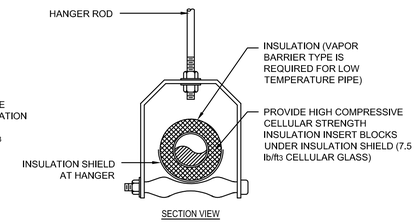


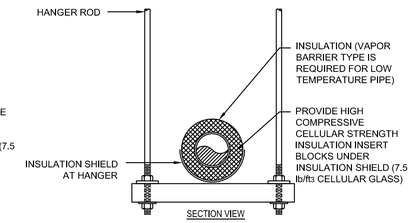


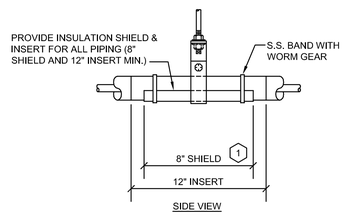


ADJUSTABLE CLEVIS HANGER

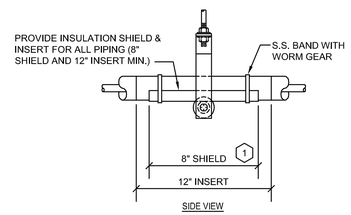


ADJUSTABLE ROLLER HANGER

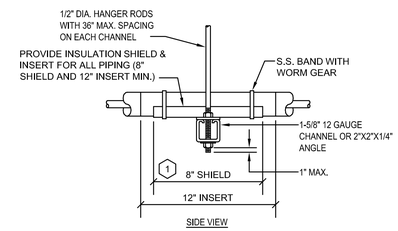


TRAPEZE HANGER FOR UP TO 1000 LB. UNIFORM LOAD

| MAXIMUM PIPE/TUBING SUPPORT SPACING, FEET | | | | | | | | | | | | | | | | | | |
|---|---|---|---|---|---|---|---|---|---|---|---|---|---|---|---|---|---|---|
| NOM. SIZE | THRU 3/4" | 1 | 1 1/4 | 1 1/2 | 2 | 2 1/2 | 3 | 4 | 5 | 6 | 8 | 10 | 12 | 14 | 16 | 18 | 20 | 24 |
| PIPE | 7 FT | 7 | 7 | 9 | 10 | 11 | 12 | 12 | 12 | 12 | 12 | 12 | 12 | 12 | 12 | 12 | 12 | 12 |
| TUBING | 5 FT | 6 | 6 | 8 | 8 | 9 | 10 | 10 | 10 | 10 | 10 | - | - | - | - | - | - | - |
| NOTE: FOR TRAPEZE HANGER TAKE SPACING OF SMALLEST SIZE ON TRAPEZE. | | | | | | | | | | | | | | | | | | |

KEYED NOTES (ADJACENT DETAIL ONLY):

1. REFERENCE PREINSULATED PIPE MANUFACTURER REQUIRED SHIELD LENGTHS (UP TO 18" MIN).

## 1 P500 TYPICAL PIPE HANGER DETAIL
NOT TO SCALE

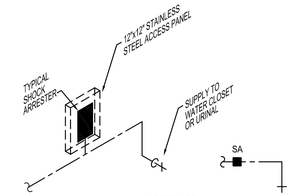


ALTERNATE INSTALLATION (ONLY WHERE INDICATED)

ISOMETRIC VIEW

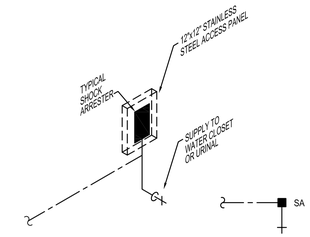


ISOMETRIC VIEW PLAN VIEW

## 2 P500 TYPICAL SHOCK ARRESTER
NOT TO SCALE

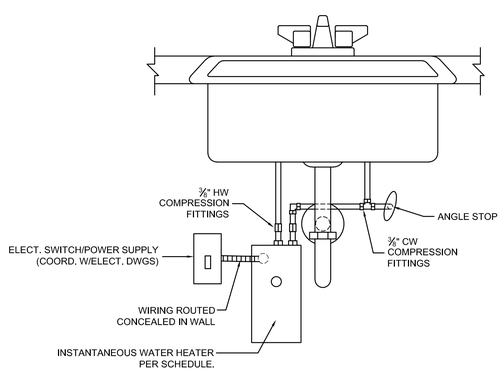


## 3 P500 INSTANTANEOUS WH DIAGRAM
NOT TO SCALE

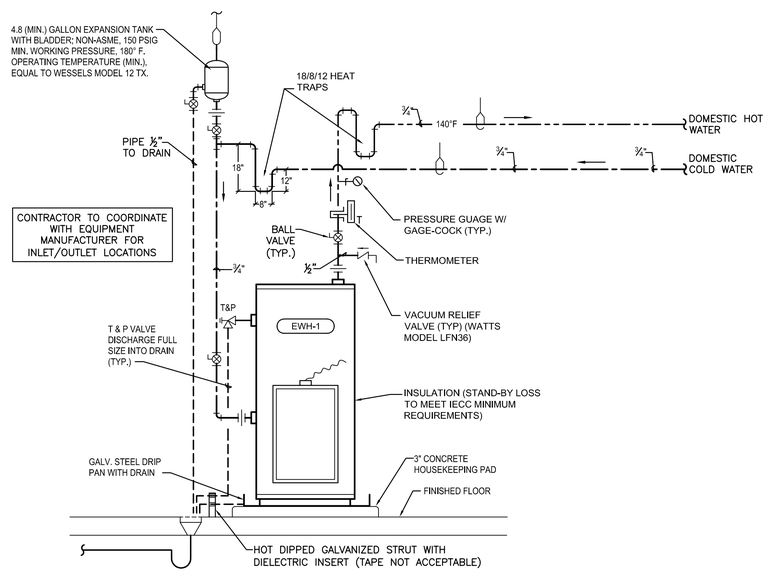


## 4 P500 WATER HEATER ASSEMBLY-ELECTRIC
NOT TO SCALE (110' SUPPLY WITH TMV)

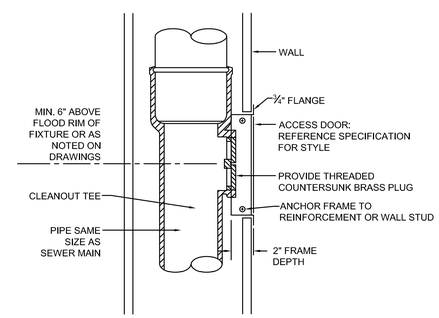


## 5 P500 TYPICAL WALL CLEANOUT
NOT TO SCALE

TEXAS PARKS & WILDLIFE

# SOUTH LLANO RIVER STATE PARK
## HEADQUARTERS BUILDING RENOVATION AND EXPANSION
PROJECT NUMBER: 134245

DATE: 04.09.2021
DESIGNED BY: TEW
DRAWN BY: JAF
REVIEWED BY: TEW
REVISED:
REVISED:
REVISED:

STATE OF TEXAS
THOMAS E. WATSON
114610
LICENSED
PROFESSIONAL ENGINEER

CLEARY ZIMMERMANN ENGINEERS
Firm No. F-9357 | ClearyZimmermann.com

FORD POWELL & CARSON Architects & Planners, Inc.
Architecture
Planning
Preservation
Interior Design
1138 East Commerce Street
San Antonio, Texas 78205
210/226-1246
92706

SHEET TITLE
PLUMBING DETAILS

SHEET NUMBER
P500

CONSTRUCTION DOCUMENTS

PATH: W:\17045\Plbg\17045 - P500.dwg

# TECHNOLOGY SYMBOLS AND ABBREVIATIONS

(SOME SYMBOLS MAY NOT BE APPLICABLE TO THIS PROJECT)

## SYMBOLS

### AUDIO VISUAL

| | |
|---|---|
| AV X | AUDIO VISUAL INPUT INSTALLED AT 48" A.F.F. UNLESS NOTED OTHERWISE. : TWO GANG BOX, CONDUIT BUSHINGS, PLASTERING,(2) 1" CONDUITS TO ABOVE ACCESSIBLE CEILING. X INDICATES THE INPUT NUMBER |
| AV X | FLOOR BOX AUDIO VISUAL INPUT: 1-1/2" CONDUIT TO ABOVE ACCESSIBLE CEILING. X INDICATES THE INPUT NUMBER |
| | CEILING MOUNTED PROJECTOR |
| | WALL MOUNTED SHORT THROW PROJECTOR. |
| | TELEVISION OUTLET: FEMALE COAX JACK, WALL PLATE, 1" CONDUIT TO ABOVE ACCESSIBLE CEILING. |
| | BROADCAST OUTLET: FEMALE COAX JACK CONDUIT BUSHINGS PALSTER RING, 1" CONDUIT TO ABOVE ACCESSIBLE CEILING. |
| S | SPEAKER, CEILING MOUNTED WITH BACKBOX AND GRILLE. |
| S | SPEAKER, WALL MOUNTED WITH BACKBOX AND GRILLE. |
| M | MICROPHONE OUTLET. |
| CP | CONTROL PANEL INSTALLED AT 48" A.F.F. UNLESS NOTED OTHERWISE. : TWO GANG BOX CONDUIT BUSHINGS, PLASTER RING 1" CONDUIT TO ABOVE ACCESSIBLE CEILING. |
| | BROADBAND AMPLIFIER |
| X | 8-WAY CATV TAP<br>X = TAP VALUE |
| | 75ohm TERMINATOR |
| FP | FLAT PANEL MONITOR |
| PS | PROJECTION SCREEN |
| ER | EQUIPMENT RACK |

### SECURITY

| | |
|---|---|
| SEC | SECURITY PANEL INSTALLED AT 48" A.F.F. UNLESS NOTED OTHERWISE. |
| DPS | DOOR POSITION SWITCH |
| DPS RH | DOOR POSITION SWITCH AT ROOF HATCH |
| | SURVEILLANCE CAMERA<br>INTERIOR: CISCO 6020<br>EXTERIOR: CISCO 7530 DD |
| | SURVEILLANCE CAMERA; 180° OR 270°<br>CISCO 7070 |
| CR 1 | CARD READER INSTALLED AT 48" A.F.F. UNLESS NOTED OTHERWISE. |
| CR 2 | DUAL HEIGHT CARD READER INSTALLED AT 48" A.F.F. UNLESS NOTED OTHERWISE. |
| CR 3 | DUAL HEIGHT CARD READER WITH INTEGRATED TWO VIDEO AND TWO WAY INTERCOM INSTALLED AT 48" A.F.F. UNLESS NOTED OTHERWISE. |
| CR 4 | CARD READER WITH INTEGRATED TWO VIDEO AND TWO WAY INTERCOM INSTALLED AT 48" A.F.F. UNLESS NOTED OTHERWISE. |
| D | DURESS PUSHBUTTON |
| KP | KEYPAD INSTALLED AT 48" A.F.F. UNLESS NOTED OTHERWISE. |
| GB | GLASS BREAK DETECTOR |
| REX | REQUEST TO EXIT |
| LVREX | LOW VOLTAGE REQUEST TO EXIT. CONNECTION LOCATED IN DOOR HARDWARE |
| MD | MOTION DETECTOR INSTALLED AT 108" A.F.F. OR 6" BELOW CEILING GRID FOR LOWER CEILINGS UNLESS NOTED OTHERWISE. |
| MD LR | LONG RANGE MOTION DETECTOR INSTALLED AT 108" A.F.F. OR 6" BELOW CEILING GRID FOR LOWER CEILINGS UNLESS NOTED OTHERWISE. |
| S | SECURITY SOUNDER INSTALLED AT 108" A.F.F. OR 6" BELOW CEILING GRID FOR LOWER CEILINGS UNLESS NOTED OTHERWISE. |
| TS | TEMPERATURE SENSOR |
| DRB | DOOR RELEASE BUTTON |
| WP | EXTERIOR WALL PENETRATION |
| KT-1 | DOOR CONTROLLER. DATA CONNECTION REQUIRED |
| RCR | ROUGH-IN FOR FUTURE CARD READER |
| RDPS | ROUGH-IN FOR FUTURE DOOR POSITION SWITCH |
| VP | V-PLEX MODULE |
| WCR | WIRELESS CARD READER |
| PIM | PANEL INTERFACE MODULE |
| IC | INTERCOM STATION |

### STRUCTURED CABLING

| | |
|---|---|
| | SIMPLEX RECEPTACLE STAINLESS STEEL COVERPLATE INSTALLED AT 18" A.F.F. UNLESS NOTED OTHERWISE. REFER TO ELECTRICAL DRAWINGS FOR MORE INFORMATION. |
| | DUPLEX RECEPTACLE INSTALLED AT 18" A.F.F. UNLESS NOTED OTHERWISE, BY ARCHITECT/OWNER. REFER TO ELECTRICAL DRAWINGS FOR MORE INFORMATION. |
| | DOUBLE DUPLEX (QUADRUPLEX) RECEPTACLE, WITH COVER PLATE INSTALLED AT 18" A.F.F. UNLESS NOTED OTHERWISE. . COLOR BY ARCHITECT/OWNER. REFER TO ELECTRICAL DRAWINGS FOR MORE INFORMATION. |
| | SPECIAL PURPOSE RECEPTACLE. SEE PANEL SCHEDULES AND FLOOR PLAN NOTES FOR TYPE. RECEPTACLE SHALL BE FLUSH MOUNT. PROVIDE TWO GANG BACKBOX, PLASTER RING, AND STAINLESS STEEL PLATE. |
| | SINGLE VOICE OUTLET INSTALLED AT 18" A.F.F. UNLESS NOTED OTHERWISE. : TWO GANG BOX, CONDUIT BUSHINGS, PLASTER RING, 1" CONDUIT TO ABOVE ACCESSIBLE CEILING. YELLOW CATEGORY 6 CABLE. |
| X | MULTI-VOICE OUTLET INSTALLED AT 18" A.F.F. UNLESS NOTED OTHERWISE. : TWO GANG BOX, CONDUIT BUSHINGS, PLASTER RING, 1" CONDUIT TO ABOVE ACCESSIBLE CEILING, X INDICATES THE NUMBER OF CONNECTIONS. YELLOW CATEGORY 6 CABLE. |
| | SINGLE DATA OUTLET INSTALLED AT 18" A.F.F. UNLESS NOTED OTHERWISE. : TWO GANG BOX, CONDUIT BUSHINGS, PLASTER RING, 1" CONDUIT TO ABOVE ACCESSIBLE CEILING. YELLOW CATEGORY 6 CABLE. |
| X | MULTI-DATA OUTLET INSTALLED AT 18" A.F.F. UNLESS NOTED OTHERWISE. : TWO GANG BOX CONDUIT BUSHINGS PLASTER RING 1" CONDUIT TO ABOVE ACCESSIBLE CEILING, X INDICATES THE NUMBER OF CONNECTIONS. YELLOW CATEGORY 6 CABLE. |
| X | FLOOR MULTI-DATA OUTLET: 1" CONDUIT TO ABOVE ACCESSIBLE CEILING. |
| | FLOOR DATA OUTLET: 1" CONDUIT TO ABOVE ACCESSIBLE CEILING |
| C | CAMERA CEILING DATA OUTLET. RED CATEGORY 6 CABLE. |
| X C | CAMERA CEILING MULTI-DATA OUTLET: X INDICATES NUMBER OF CONNECTIONS. RED CATEGORY 6 CABLE |
| W | WIRELESS ACCESS POINT CEILING DATA OUTLET. WHITE CATEGORY 6 CABLE |
| X W | WIRELESS ACCESS POINT CEILING MULTI-DATA OUTLET: X INDICATES NUMBER OF CONNECTIONS. WHITE CATEGORY 6 CABLE |
| P | PROJECTOR CEILING DATA OUTLET. VIOLET CATEGORY 6 CABLE |
| | POWER POLE |
| X Y | MULTI-VOICE, MULTI DATA OUTLET INSTALLED AT 18" A.F.F. UNLESS NOTED OTHERWISE. : TWO GANG BOX, CONDUIT BUSHING, PLASTER RING, 1" CONDUIT TO ABOVE ACCESSIBLE CEILING, X INDICATES NUMBER OF DATA CONNECTORS, Y INDICATES NUMBER OF VOICE CONNECTORS. |
| | ABOVE COUNTER OUTLET |
| | SURFACE RACEWAY |
| | RG-6 COAXIAL CABLE |
| | .500 COAXIAL CABLE |
| R | CONDUIT ROUGH-IN FOR FUTURE USE INSTALLED AT 18" A.F.F. UNLESS NOTED OTHERWISE. |
| W | DATA OUTLET FOR WIRELESS ACCESS POINT. |
| WP | WALL PENETRATION |
| WAP X | WIRELESS ACCESS POINT, X INDICATES WIRELESS POINT MODEL TO BE USED AT THIS LOCATION. REFER TO SPECIFICATION. |

## ABBREVIATIONS

| | |
|---|---|
| AER | AERIAL |
| AFF | ABOVE FINISHED FLOOR |
| AFG | ABOVE FINISHED GRADE |
| AWG | AMERICAN WIRE GAUGE |
| BLDG | BUILDING |
| C | CONDUIT |
| CCTV | CLOSED CIRCUIT TELEVISION |
| CFCI | CONTRACTOR FURNISHED, CONTRACTOR INSTALLED |
| COND | CONDUCTOR |
| CPU | CENTRAL PROCESSING UNIT |
| DEMARK | DEMARCATION POINT |
| EMT | ELECTRICAL METAL TUBE |
| EQMT | EQUIPMENT |
| EXTG | EXISTING |
| F/A , F.A. | FIRE ALARM |
| FOC | FIBER OPTIC CABLE |
| FT | FEET, FOOT |
| GND | GROUND |
| GRD | GALVANIZED RIGID STEEL |
| HVAC | HEATING/VENTILATING/AIR CONDITIONING |
| IDF | INTERMEDIATE DISTRIBUTION FRAME |
| IMC | INTERMEDIATE STEEL CONDUIT |
| IN | INCHES |
| JB | JUNCTION BOX |
| MAX | MAXIMUM |
| MDF | MAIN DISTRIBUTION FRAME |
| MIN | MINIMUM |
| MM | MULTIMODE |
| MTD | MOUNTED |
| OC | ON CENTER |
| OFCI | OWNER FURNISHED CONTRACTOR INSTALLED |
| OH | OVERHEAD |
| OSP | OUTSIDE PLANT |
| P | POLE |
| PA | PUBLIC ADDRESS |
| PB | PUSHBUTTON |
| PBX | PRIVATE BRANCH EXCHANGE |
| PR | PAIR |
| PVC | POLYVINYL CHLORIDE |
| QUAD | QUAD RECEPTACLE |
| S | SECURITY |
| SM | SINGLE MODE |
| SP | SERVICE PROVIDER |
| TC | TIME CLOCK |
| TELE | TELEPHONE |
| TR | TELECOMMUNICATIONS REGION |
| TV | TELEVISION |
| UON | UNLESS OTHERWISE NOTED |
| UPS | UNINTERRUPTABLE POWER SUPPLY |
| UTP | UNSHIELDED TWISTED PAIR |
| WAP | WIRELESS ACCESS POINT |
| WP | WEATHERPROOF |


CLEARY ZIMMERMANN ENGINEERS
Tx. Reg. # F-9357
13444 S. Flores, Suite 101
San Antonio, Texas 78204
T 210.447.6100 / F 210.447.6101
ClearyZimmermann.com

FORD POWELL &CARSON
Architects & Planners, Inc.
Architecture
Planning
Preservation
Interior Design
1138 East Commerce Street
San Antonio, Texas 78205
210/226-1246
92706


TEXAS PARKS & WILDLIFE

SOUTH LLANO RIVER STATE PARK
HEADQUARTERS BUILDING RENOVATION AND EXPANSION
PROJECT NUMBER: 134245

DATE: 04.09.2021
DESIGNED BY: DP
DRAWN BY: CZ
REVIEWED BY: DP
REVISED:
REVISED:
REVISED:

SHEET TITLE
TECHNOLOGY SYMBOLS AND ABBREVIATIONS

SHEET NUMBER
T-000

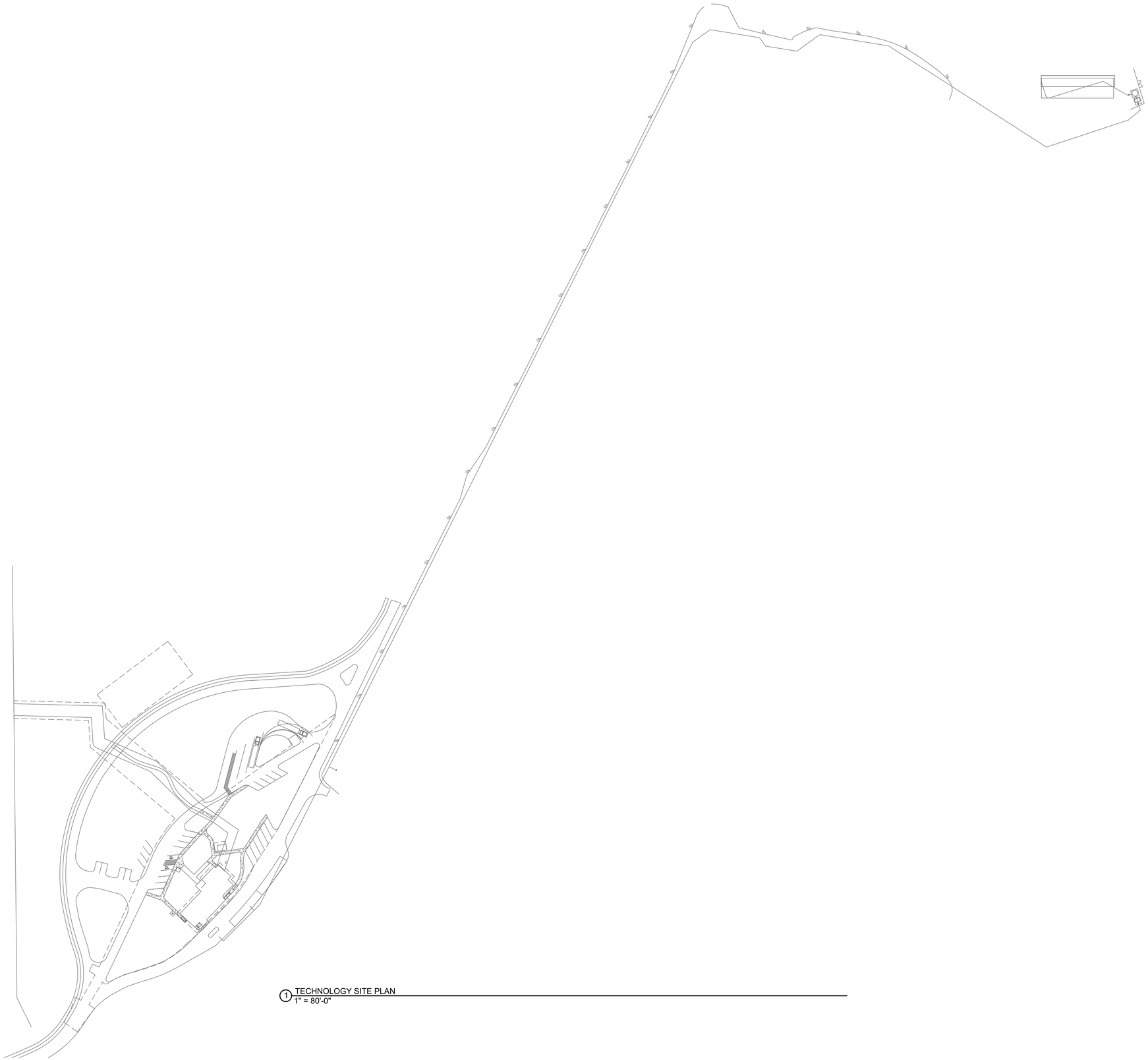

1 TECHNOLOGY SITE PLAN
1" = 80'-0"

TEXAS
PARKS &
WILDLIFE

# SOUTH LLANO RIVER STATE PARK
## HEADQUARTERS BUILDING RENOVATION AND EXPANSION
PROJECT NUMBER: 134245

DATE: 04.09.2021
DESIGNED BY: DP
DRAWN BY: CZ
REVIEWED BY: DP
REVISED:
REVISED:
REVISED:

CLEARY ZIMMERMANN
ENGINEERS
Tx. Reg. # F-9357
13444 S. Flores, Suite 101
San Antonio, Texas 78204
T 210.447.6100 / F 210.447.6101
ClearyZimmermann.com

FORD POWELL &CARSON
Architects & Planners, Inc.
Architecture
Planning
Preservation
Interior Design
1138 East Commerce Street
San Antonio, Texas 78205
210/226-1246
92706

SHEET TITLE
TECHNOLOGY SITE PLAN

SHEET NUMBER
T-101

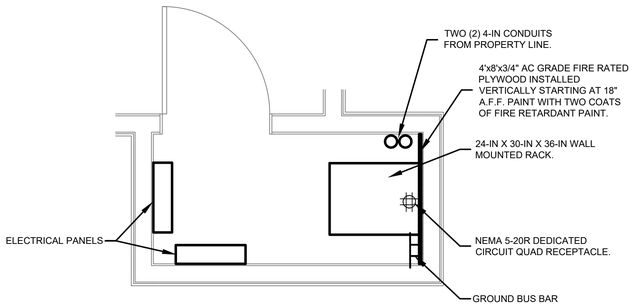


2 ELEC. 110 ROOM LAYOUT
1/2" = 1'-0"

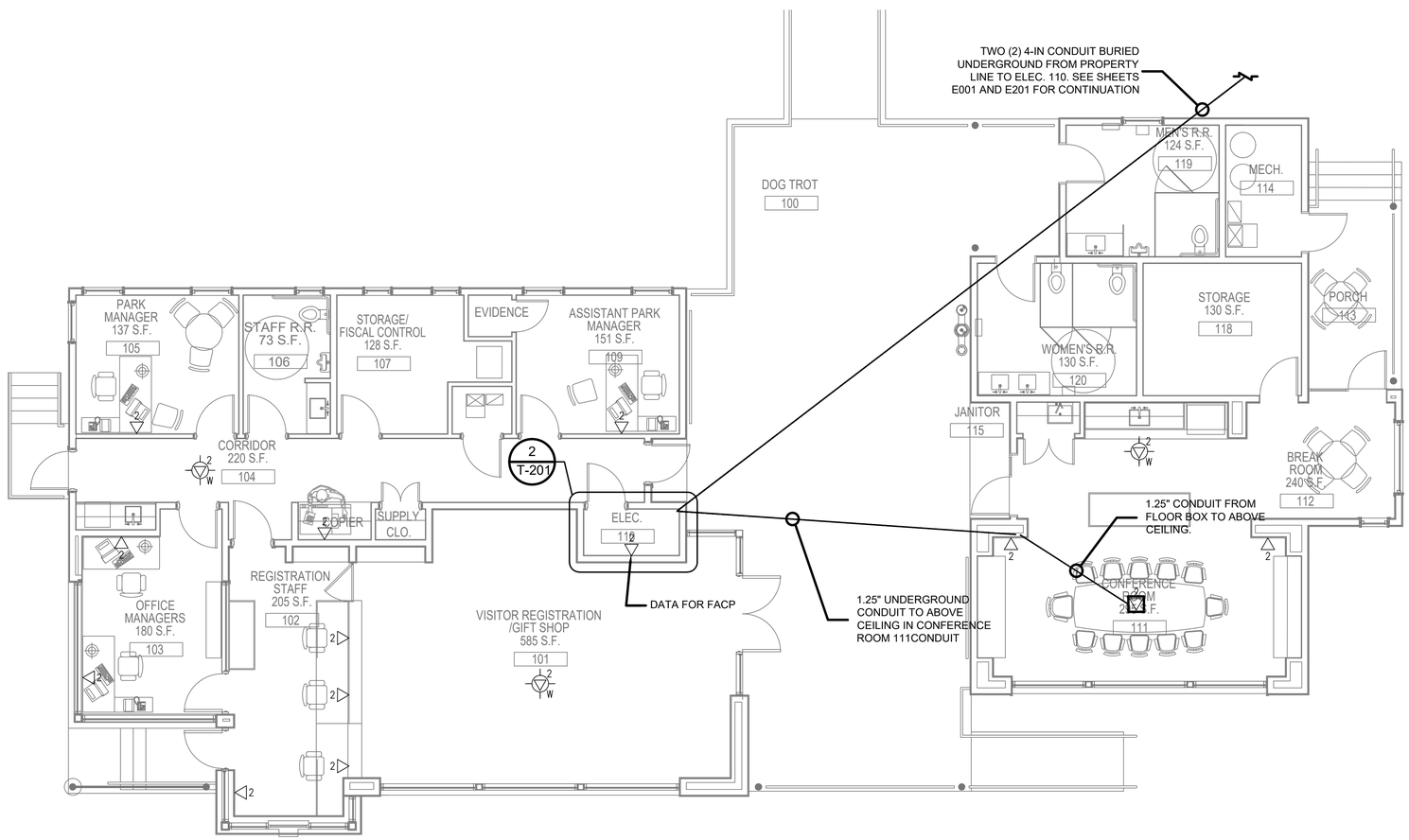


1 TECHNOLOGY FLOOR PLAN
3/16" = 1'-0"

TEXAS PARKS & WILDLIFE

SOUTH LLANO RIVER STATE PARK
HEADQUARTERS BUILDING RENOVATION AND EXPANSION
PROJECT NUMBER: 134245

DATE: 04.09.2021
DESIGNED BY: DP
DRAWN BY: CZ
REVIEWED BY: DP
REVISED:
REVISED:
REVISED:

CLEARY ZIMMERMANN ENGINEERS
Tx. Reg. # F-9357
1344 S. Flores, Suite 101
San Antonio, Texas 78204
T 210.447.6100 / F 210.447.6101
ClearyZimmermann.com

FORD POWELL &CARSON Architects & Planners, Inc.
Architecture
Planning
Preservation
Interior Design
1138 East Commerce Street
San Antonio, Texas 78205
210/226-1246
92706

SHEET TITLE
TECHNOLOGY FLOOR PLAN

SHEET NUMBER
T-201

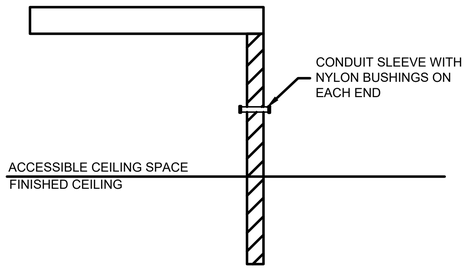


1 T-300 Conduit Sleeve - Wall

Not to Scale

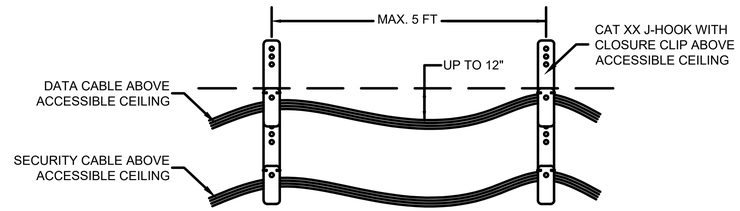


2 T-300 J-Hook Cable Pathway - Wall Mount

Not to Scale

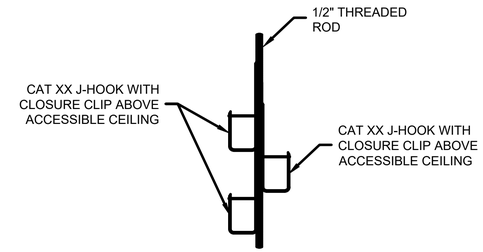


3 T-300 J-Hook Cable Pathway - All Thread Mount

Not to Scale

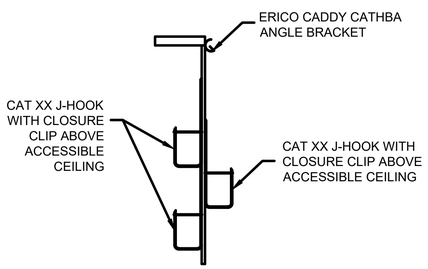


4 T-300 J-Hook Cable Pathway - C-Bracket Mount

Not to Scale

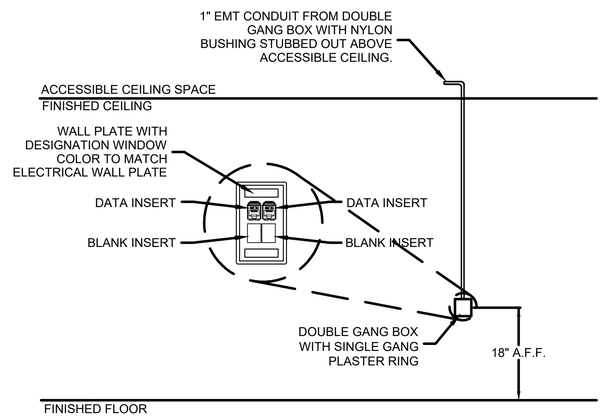


5 T-300 Dual Data Voice Workstation

Not to Scale

2

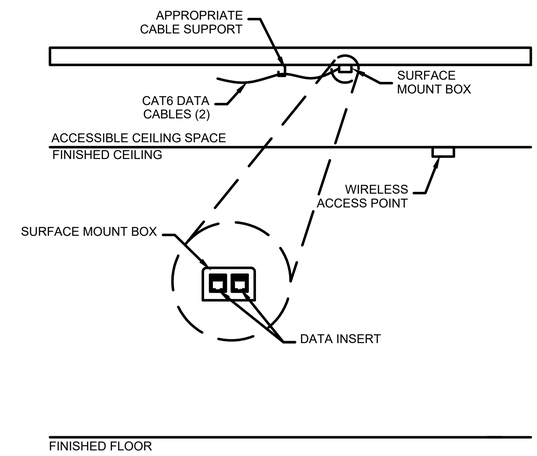


6 T-300 Above Ceiling Data Outlet

Not to Scale

2
W

TEXAS PARKS & WILDLIFE

SOUTH LLANO RIVER STATE PARK
HEADQUARTERS BUILDING RENOVATION AND EXPANSION
PROJECT NUMBER: 134245

DATE: 04.09.2021
DESIGNED BY: DP
DRAWN BY: CZ
REVIEWED BY: DP
REVISED:
REVISED:
REVISED:

CLEARY ZIMMERMANN ENGINEERS
Tx. Reg. # F-9357
1344 S. Flores, Suite 101
San Antonio, Texas 78204
T 210.447.6100 / F 210.447.6101
ClearyZimmermann.com

FORD POWELL &CARSON
Architects & Planners, Inc.
Architecture
Planning
Preservation
Interior Design
1138 East Commerce Street
San Antonio, Texas 78205
210/226-1246
92706

SHEET TITLE
TECHNOLOGY
TYPICAL DETAILS

SHEET NUMBER
T-300